Trials@uspto.gov
Tel: 571-272-7822

Paper No. 44
Entered: September 9, 2016

UNITED STATES PATENT AND TRADEMARK OFFICE

BEFORE THE PATENT TRIAL AND APPEAL BOARD

MOTIVEPOWER, INC.,
Petitioner,

v.

CUTSFORTH, INC.,
Patent Owner.

Case IPR2013-00274
Patent 7,990,018 B2

Before TRENTON A. WARD, MIRIAM L. QUINN, and CARL M. DeFRANCO, *Administrative Patent Judges.*

WARD, *Administrative Patent Judge*.

FINAL WRITTEN DECISION ON REMAND
35 U.S.C. § 144 and 37 C.F.R. § 42.5(a)

I. INTRODUCTION

A. Background

MotivePower, Inc., Petitioner, filed a Petition to institute an *inter partes* review of all the claims 1–24 (the "challenged claims") of U.S. Patent No. 7,990,018 B2 (Ex. 1001, "the '018 patent") pursuant to 35 U.S.C. §§ 311–19. Paper 1 ("Pet."). Patent Owner filed a Preliminary Response. Paper 6 ("Prelim. Resp."). The Board granted the Petition and instituted trial for all asserted claims. Paper 7 ("Dec."). Although Petitioner proposed nine grounds of unpatentability, we instituted trial on only the following ground: Claims 1–24 would have been obvious in view of in view of Bissett,[1] Kartman,[2] and Ohmstedt.[3] Dec. 25.

During trial, Cutsforth, Inc., Patent Owner, filed a Patent Owner Response ("PO Resp.") addressing the grounds involved in trial and relying on the Declaration of Dr. Thomas A. Keim (Ex. 2019). Paper 12. Petitioner filed a Reply to Patent Owner's Response. Paper 21 ("Pet. Reply"). An oral hearing was held on September 16, 2014, and a transcript of the hearing is included in the record. Paper 30 ("Tr.").

On October 30, 2014, the Board issued a Final Written Decision in accordance with 37 C.F.R. § 42.73. Paper 31 ("Final Dec."). The Board concluded that Petitioner had established, by a preponderance of the evidence, that claims 1–24 of the '018 patent would have been obvious over Bissett, Kartman, and Ohmstedt. Final Dec. 32. Patent Owner appealed the decision to the United

[1] U.S. Patent No. 3,432,708 (Ex. 1005) ("Bissett").

[2] U.S. Patent No. 5,043,619 (Ex. 1004) ("Kartman").

[3] U.S. Patent No. 3,864,803 (Ex. 1003) ("Ohmstedt").

States Court of Appeals for the Federal Circuit. Paper 35.

On January 22, 2016, the Federal Circuit issued a decision vacating and remanding the case to the Board. *Cutsforth, Inc. v. MotivePower, Inc.*, 636 F. App'x 575, 578 (Fed. Cir. 2016) (unpublished) (nonprecedential) (entered herein as Paper 38). The Federal Circuit held "that the Board's Final Written Decision does not provide enough explanation to support its finding of obviousness." *Id.* "When the Board determines that modifications and combinations of the prior art render a claimed invention obvious, the Board must fully explain why a person of ordinary skill in the art would find such changes obvious." *Id*. at 578–79. As a result, the Federal Circuit vacated the Board's determinations that claims 1–24 of the '018 patent were not patentable and remanded the case to the Board "for proceedings appropriate to the administrative process." *Id*. at 579 (citing *In re Sang-Su Lee*, 277 F.3d 1338, 1346 (Fed. Cir. 2002)). On February 29, 2016, the Federal Circuit issued a formal mandate, returning the case to the Board. Paper 39.

On March 29, 2016, the Board held a conference with the parties to discuss Patent Owner's request to submit additional briefing in light of the remand and to discuss the Petitioner's opposition to such additional briefing. Paper 37, 2. During the conference, Patent Owner indicated that it was seeking additional briefing because the "record is without adequate briefing as to whether one of skill would have made the changes that are contemplated as they relate to a spring that was at issue and relating to claim 5." Ex. 2064, Transcript of March 29, 2016 conference call, 6:15–18. Patent Owner stated that "a remand typically . . . deserves briefing on the point of the remand to make sure the record is full and there could be a fulsome review of the issues that are thought by the Appellate Court to . . . need[] further review." *Id*. at 7:20–25. Patent Owner further argued that additional briefing was needed because the record was "devoid of arguments . . . from either

side on this issue"; thus, Patent Owner requested "briefing without evidentiary submission by either party, a page limited briefing of simultaneous submission." *Id*. at 8:9–11, 11:12–14.[4]

We granted Patent Owner's request to file additional briefing. Paper 37, 3. More particularly, we authorized additional briefing limited to the issue raised by Patent Owner, namely, the design choice issue with respect to claim 5 of the '018 patent. *Id*. In accordance with the Board's Order, both Petitioner and Patent Owner filed their briefs on April 15, 2016. *See* Paper 40 ("Petitioner Remand Br.") and Paper 41 ("PO Remand Br."). Subsequently, Patent Owner requested authorization to file a Reply Brief to address arguments presented in Petitioner's Remand Brief. The Board granted the request and authorized both parties to file a reply brief. Accordingly, the parties filed reply briefs on April 29, 2016. *See* Paper 42 ("PO Remand Reply") and Paper 43 ("Pet. Remand Reply").

For the reasons that follow, we determine that Petitioner has demonstrated, by a preponderance of the evidence, that claims 1–4, 6–7, and 9–24 of the '018 patent would have been obvious over Bissett, Kartman, and Ohmstedt. Additionally, we determine that the Petitioner has failed to establish that claims 5 and 8 of the '018 patent are unpatentable.

B. Related Proceedings

Petitioner indicates that the '018 patent is currently the subject of a co-pending federal district court case, *Cutsforth, Inc. v. MotivePower, Inc.*, No. 0:12-cv-01200-SRN-JSM (D. Minn.). Pet. 2; Paper 5, 2. In addition, patents related to

[4] We note that neither party requested authorization to submit new evidence after the remand.

the ’018 patent, as listed below, have been the subject of *inter partes* review as follows:

U.S. Patent No.	***Inter Partes* Proceeding**
7,122,935 B2	IPR2013-00267
7,141,906 B2	IPR2013-00268[5]
7,417,354 B2	IPR2013-00270
8,179,014 B2	IPR2013-00272

C. The ’018 Patent

The ’018 patent generally relates to a brush holder assembly for use in electrical devices and slip ring assemblies. Ex. 1001, 1:25–27. In particular, the patent describes that a brush is used in an electrical device to pass electrical current from a stationary contact to a moving contact surface, and vice versa. *Id.* at 1:31–33. The brush is typically in contact with a moving surface; thus, the surface of the brush wears down, reducing the quality of the electrical contact. *Id.* at 1:42–62. The ’018 patent describes that when the brush is so worn that it requires replacement, the moving contact surface may need to be halted, which may be

[5] On April 6, 2016, the Federal Circuit issued a decision reversing the Board’s decision in IPR2013-00268 because “the Board erred in construing the claim terms ‘projection extending from’ and ‘brush catch coupled to the beam.’” *Cutsforth, Inc. v. Motivepower, Inc.*, 643 F. App'x 1008, 1009 (Fed. Cir. 2016). As neither of these claim terms is at issue here, the Federal Circuit’s decision has no effect on this proceeding.

difficult or expensive. *Id.* at 2:8–11. Alternatively, the ’018 patent describes that maintaining the relative motion during replacement of the brush may be unsafe because of the risk of arcing and an accidental short circuit in the electrical components. *Id.* at 2:12–15. The patent describes that it would be an advantage to remove or replace a worn brush without stopping the moving parts involved. *Id.* at 2:16–20.

One embodiment of the ’018 patent describes a brush holder assembly with a mounting bracket in an “engaged” configuration, relative to a lower mount block. *Id.* at 2:66–3:2. For example, Figure 1 of the ’018 patent is reproduced below.

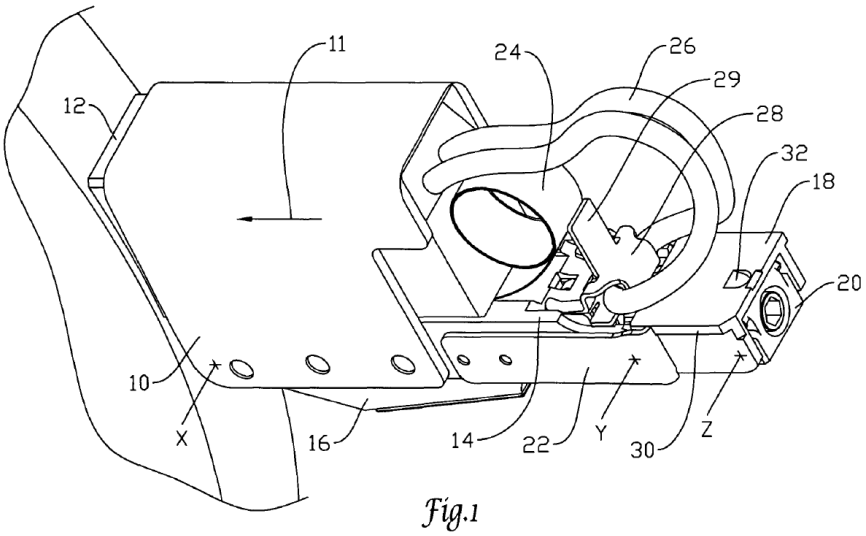

Fig.1

Figure 1 illustrates an “engaged” configuration where brush 12, surrounded by brush box 10, contacts a conducting surface because brush spring 24 pushes the brush toward the bottom edge of box 10. *Id.* at Fig.1, 4:27–45, 6:20–37. According to Figure 1 above, brush box 10 is affixed to beam 14, which is affixed, via a hinged attachment, to lower mount block 16. *Id.* at 4:34–41. In the “engaged” position, as shown in Figure 1, a conductive path is formed from brush 12 through brush conductor 26, terminal 28, and conductor strap 34 (not in Figure

1 but shown in Figure 2, reproduced below). *Id.* at 7:11–14.

The ’018 patent further describes a “disengaged” configuration, shown in particular with respect to Figure 2, reproduced below.

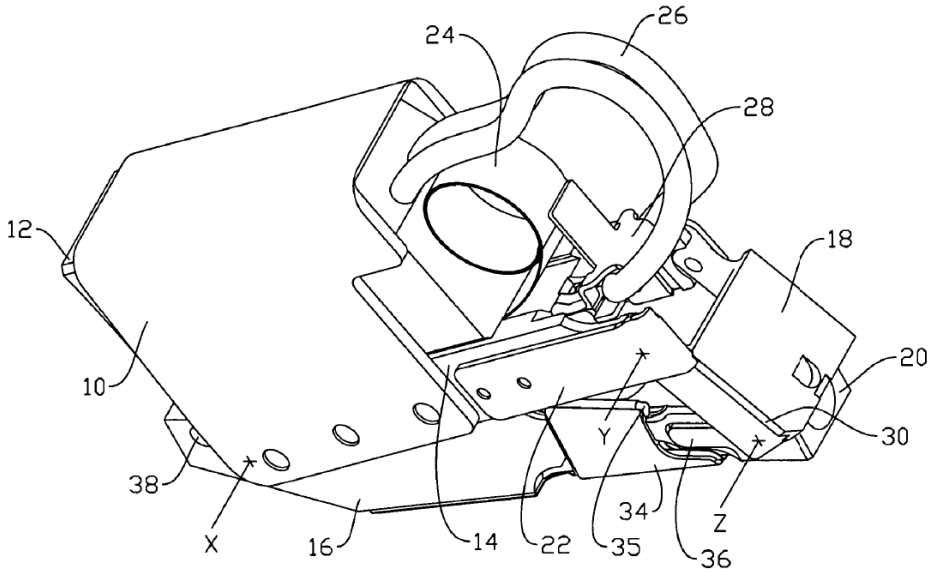

Fig.2

As illustrated in Figure 2 above, a hinging action takes place at certain pivot lines, such as pivot line “X,” about which beam 14 moves with respect to lower mounting block 16. *Id.* at 6:46–56. In the disengaged position, conductor strap 34 breaks contact with terminal 28, thus interrupting the current flow before the brush breaks contact with the conductive surface. *Id.* at 10:47–63.

Claim 1, reproduced below, is illustrative of the claimed subject matter:

> 1. A brush holder assembly for holding a brush having a conductive element, the brush holder assembly comprising:
>
> an elongate mounting block having a major axis, an upper end and a lower end, and first and second outer side surfaces substantially parallel to said major axis, and including a stationary brush release proximate said lower end; and

> a brush holder component adapted for removably mounting to the mounting block, the brush holder component comprising a brush box and a channel for receiving a portion of the mounting block therein, the channel including first and second inner side surfaces;
>
> the brush holder component further comprising a brush catch having a first position and a second position, the brush catch preventing sliding movement of a brush within the brush box in the first position, and the brush catch permitting sliding movement of a brush within the brush box in the second position;
>
> wherein the stationary brush release is positioned on the mounting block so that when the brush holder component is mounted on the mounting block, the stationary brush release engages with the brush catch, moving the brush catch into the second position.

Id. at 17:64–18:20.

II. ANALYSIS

A. Claim Construction

In an *inter partes* review, claim terms in an unexpired patent are interpreted according to their broadest reasonable construction in light of the specification of the patent in which they appear. 37 C.F.R. § 42.100(b); *Cuozzo Speed Techs., LLC v. Lee*, 136 S. Ct. 2131, 2144–46 (2016) (upholding the use of the broadest reasonable interpretation standard as the claim interpretation standard to be applied in *inter partes* reviews). Claim terms also are given their ordinary and customary meaning as would be understood by one of ordinary skill in the art in the context of the entire disclosure. *In re Translogic Tech., Inc.*, 504 F.3d 1249, 1257 (Fed. Cir. 2007). Also, we must be careful not to read a particular embodiment appearing in the written description into the claim if the claim language is broader than the embodiment. *See In re Van Geuns*, 988 F.2d 1181, 1184 (Fed. Cir. 1993) ("limitations are not to be read into the claims from the specification").

In the Decision on Institution, we interpreted the term "mounting block" of the '018 patent to mean "a base for affixing to another structure." Dec. 8. Furthermore, we interpreted the term "removably mounting" to mean "mounting in a manner that is not permanent." *Id*. at 10. Patent Owner argues that the constructions should be modified. Each of these terms is analyzed in turn.

1. "mounting block"

Patent Owner argues that the construction for "mounting block" must reflect the "specification's requirement that the mounting block must be fixed to a location." PO Resp. 8. In support of this argument, Patent Owner relies on Figure 15B of the '018 patent as depicting that lower mounting block 16, i.e., the "mounting block," is fixed in place to mount base 41 via bolts 43. *Id.* at 9–10. Patent Owner further points to descriptions of various embodiments of the attachment of the "mounting block" to a base or to a location. *Id.* We determine that neither Figure 15B nor the statements in the specification identified by Patent Owner *require* the non-moveable, or "fixed," aspect. Figure 15B does not show that the attachment excludes any ability to adjust the block. Indeed, the bottom surface of the mount is not depicted, leaving us to speculate concerning the shape of mount holes 96, because a round hole would suggest there is no adjustability, while a slotted or elongated hole would suggest adjustability. *But see* Ex. 1001, Fig. 9 (not cited by Petitioner, but confirming that elongated holes 96 are contemplated). The lack of description and depiction of the shape of the holes compels us to reject Patent Owner's characterization of Figure 15B as supporting a "fixed" or non-moveable attachment. Furthermore, as for the descriptions of how the mount is attached, the specification uses the word "secure" and describes various embodiments of the attachment, none of which requires non-movability of the mount after the brush holder component is installed. *See* Ex. 1001, 12:35–36

(bolts and washers "*secure* the lower mount block 16 to a mount base" (emphasis added)), 14:56–58 ("mount holes 96 may include threading or other elements that allow for attachment to a mount base"), 16:25–28 ("in other embodiments, a welded, keyed, pinned or other attachment scheme may be used to *secure* the lower mount block 16 to a mount base" (emphasis added)). In fact, the specification makes a point of not limiting the attachment of the mount to any particular method, fixed or not fixed. *See id.* at 12:37–41 ("or other attachment scheme may be used to secure the lower mount block 16 to a mount base near a moving conductive surface or in position to move relative to a conductive surface"). Nor does the language of the claim recite any method of attachment that limits the mounting block to something that cannot be adjusted, shifted, re-positioned, or otherwise moved, after attachment to the base.

Patent Owner further proposes that the written description teaches that all embodiments include a "fixed" mounting block, and, therefore, the "mounting block" should be so construed. PO Resp. 10–12. The specification states: "with the lower mount block 16 being the only portion that must be 'fixed' to a location, attachment steps are simplified." Ex. 1001, 15:13–15. We are not persuaded by Patent Owner's argument. Although the specification uses the word "fixed" with respect to lower mount block 16, that portion of the specification is focused on describing "*the present embodiment*" of a lower mount block shown in Figure 14, which illustrates a lower mount block "*for use in several embodiments*," not *all* embodiments, as Patent Owner argues. *Id.* at 14:40–41, 15:10–17 (emphasis added). Moreover, that portion of the specification does not describe *the invention* as a fixed lower mount block. Indeed, Patent Owner's characterization of the "fixed" lower mount block may stretch the specification too far, as it may be

inferred by the use of the word "fixed," shrouded in quotation marks, that its use in that passage is not to be taken literally.[6]

In our Decision on Institution, we noted that the specification does not define the term "mounting block," and that nothing in the claim language indicates that the term is used other than in accordance with its plain and ordinary meaning. Dec. 8. Guided by evidence of the plain and ordinary meaning consistent with the specification, we determined that the word "block" means "a base, platform or supporting frame."[7] *Id.* at 8. Patent Owner, however, objects to the word "base" as defining the "mounting block" because the claims recite another base, the "stationary base." PO Resp. 11–13. Accordingly, to avoid confusion, Patent Owner proffers that the construction of "mounting block" should refer to a block, not a base. *Id.*

Petitioner argues that the proposal to define "mounting block" to mean a block does not clarify any issues and that Patent Owner has not argued that the prior art does not disclose a "block." Pet. Reply 2–4. Consequently, the clarification is unnecessary. *Id.* We agree with Petitioner. Although the claims recite a "base" and a "block" distinctly, the claims, however, may recite these two terms in a synonymous ordinary meaning, to indicate that the two distinct structures have similar functions, as bases.

Therefore, we construe the term "mounting block" according to the ordinary meaning of the term to mean "a base for affixing to another structure."

---

[6] *See, e.g.*, Chicago Manual of Style, 15th edition, Section 7.62 ("When a word or term is not used functionally but is referred to as the word or term itself, it is either italicized or enclosed in quotation marks.").

[7] *Block Definition (4)*, WEBSTER'S THIRD NEW INTERNATIONAL DICTIONARY, UNABRIDGED (1993) (Ex. 3001).

2. "removably mounting"

Claims 1, 12, and 17 recite the term "removably mounting." Patent Owner argues that our construction does not reflect the meaning the phrase would have to one skilled in the art at the time of the invention. PO Resp. 14. Specifically, Patent Owner proffers the Keim Declaration, various references, and the stated problems in the Background of the Invention to argue that the term "removable" means without requiring removal of attachment hardware like nuts and bolts. *Id.* at 14–15 (citing Ex. 2019 ¶¶ 83–84, Ex. 1001, 2:8–19). We are not persuaded by Patent Owner's argument and evidence.

First, the specification of the '018 patent does not support Patent Owner's contention that not removing hardware attachments results from the desire to provide safe, easy removal and replacement of the brush assembly while the machine is running. The embodiments in the '018 patent describing the removal of the brush relate to the safety aspects of discontinuing the current when the device is in the disengaged position. *See* Ex. 1001, 10:47–63, 11:5–8. These embodiments do not describe, or even imply, in any way, that "removably mounting" is accomplished because one can avoid the removal of nuts and bolts when disengaging the brush. Although the Summary section of the specification describes "readily" removing from service a brush "without removing attachment hardware such as nuts or bolts," that description applies to "[s]ome example embodiments." *Id.* at 2:23–25. That Summary also describes other reasons for ease of removal of the brush, for example, because the device is a "contained system" that is "easier to deal with and control during removal." *Id.* at 2:28–34. Also instructive is the description of it "be[ing] useful to easily or reversibly disengage a brush from a commutator to determine the extent of wear and perform

repairs." *Id.* at 17:42–44.

Accordingly, the specification of the '018 patent describes various ways to accomplish safety and ease of removal, but does not require that such removal be accomplished without removal of attachment hardware. Patent Owner's arguments focus on exemplary embodiments, which we are careful not to incorporate into the claims. *See Phillips v. AWH Corp.*, 415 F.3d 1303, 1323 (Fed. Cir. 2005) (warning "against confining the claims to those embodiments."). Furthermore, we note that the specification describes attachment of a "*removal tool*" for "disengagement manipulation." *See* Ex. 1001, Fig. 9, 11:49–53, 12:12–23 (emphasis added). The removal tool engages a retractable catch pin into a pin seat in the beam of the device and by pulling a release tab with the thumb, the catch pin disengages, thereby attaching and removing a catch pin into the device in order to remove the brush holder. *See id.* at 12:12–23. The embodiments of the removal tool further confirm that the '018 patent does not contemplate the exclusion of all hardware attachments from the removal process and that by describing how the insertion and release of a pin is used in removing the brush holder, the specification does not exclude using similarly functioning structures, such as nuts.

Second, with regard to the extrinsic evidence allegedly showing evidence that the term "removably mounting" would have the meaning proffered by Patent Owner, we are not persuaded by that evidence. First, the Keim Declaration, in the passages cited, attempts to support Patent Owner's construction by referring to the benefit of using one versus two hands when removing a brush. Ex. 2019 ¶ 83. The specification, however, does not mention, or even imply, that the objective of the safe removal is to avoid using two hands. Second, the remaining passages of the Keim Declaration do not persuade us that the term "removable" had the meaning

Patent Owner argues. For example, the argument that in 1976 an article referred to a brush holder as "removable with an insulated handle" does not support the contention that the word "removable" means without having to remove attachment hardware such as nuts and bolts. *See* Ex. 2019 ¶¶ 83–85 (relying on references that use the word "removable" in connection with brush holders). Patent Owner has not shown that the articles relied on address the claim term "removably mounting," much less that the word "removable" somehow is unique to the situation where a brush holder is mounted in such a manner that it can be removed without removing attachment hardware. The more reasonable interpretation of those articles is that the word "removable" is used in the plain and ordinary sense of the word as known to laypersons, and not the special circumstances alleged by Patent Owner. Absent a special definition set forth in the specification and given the evidence of the broadest reasonable interpretation of the term, we are not persuaded that "removably mounting" has a different meaning to those of ordinary skill in the art. *See E-Pass Techs., Inc. v. 3Com Corp.*, 343 F.3d 1364, 1368 (Fed. Cir. 2003) (determining that, where no explicit definition for the term "electronic multi-function card" was given in the specification, this term should be given its ordinary meaning and broadest reasonable interpretation; the term should not be limited to the industry standard definition of credit card where there is no suggestion that this definition applies to the electronic multi-function card as claimed, and should not be limited to preferred embodiments in the specification).

As stated in our Decision on Institution, the claim language and the specification are evidence of the plain and ordinary meaning. In the claim language, the specific structures associated with the function of "removably mounting" include a brush holder component "for removably mounting to the

mounting block." Claim 1 further recites the brush holder component's relationship with the "mounting block"; it recites that the brush holder component comprises a "channel for receiving a portion of the mounting block therein." The specification describes several embodiments describing the interaction between the beam (described as having a "channel-like structure") and the mounting block, such as the "engaged" position, the "disengaged" position, and intermediate stages. *See* Ex. 1001, 4:27–30, *see also* 14:7–21, Figs. 13A–13C (illustrating a disengaged position of beam 132 having a pivot point "X" coupled with lower mount 130 through the groove there shown). Furthermore, "[i]n several embodiments, the beam 14 may be completely removed/separated from the lower mount block 16." *Id.* at 4:41–43. These positions and the described removal of beam 14 are consistent with the *removability* of the beam with respect to the lower mount block. That is, the beam is mounted on the mounting block in a manner that is not permanent so it can be removed as needed.

Based on the foregoing, we conclude that the construction proffered by Petitioner is consistent with the plain and ordinary meaning of the term "removably mounting": "mounting in a manner that is not permanent."

B. Principles of Law

A patent claim is unpatentable under 35 U.S.C. § 103(a) if the differences between the claimed subject matter and the prior art are such that the subject matter, as a whole, would have been obvious at the time the invention was made to a person having ordinary skill in the art to which said subject matter pertains. *KSR Int'l Co. v. Teleflex Inc.*, 550 U.S. 398, 406 (2007). The question of obviousness is resolved on the basis of underlying factual determinations including: (1) the scope and content of the prior art; (2) any differences between the claimed subject matter

and the prior art; (3) the level of ordinary skill in the art; and (4) objective evidence of nonobviousness. *Graham v. John Deere Co.*, 383 U.S. 1, 17–18 (1966).

In that regard, an obviousness analysis "need not seek out precise teachings directed to the specific subject matter of the challenged claim, for a court can take account of the inferences and creative steps that a person of ordinary skill in the art would employ." *KSR*, 550 U.S. at 418; see also *In re Translogic Tech., Inc.*, 504 F.3d 1249, 1259 (Fed. Cir. 2007). "If a person of ordinary skill in the art can implement a predictable variation, and would see the benefit of doing so, § 103 likely bars its patentability." *KSR*, 550 U.S. at 401. "A court must ask whether the improvement is more than the predictable use of prior art elements according to their established functions." *Id*. After *KSR*, the Federal Circuit has recognized that obviousness is not subject to a "rigid formula," and that "common sense of those skilled in the art demonstrates why some combinations would have been obvious where others would not." *Leapfrog Enters. v. Fisher–Price, Inc.*, 485 F.3d 1157, 1161 (Fed. Cir. 2007).

> *KSR* expanded the sources of information for a properly flexible obviousness inquiry to include market forces; design incentives; the "interrelated teachings of multiple patents"; "any need or problem known in the field of endeavor at the time of invention and addressed by the patent"; and the background knowledge, creativity, and common sense of the person of ordinary skill.

Perfect Web Techs., Inc. v. InfoUSA, Inc., 587 F.3d 1324, 1329 (Fed. Cir. 2009) (quoting *KSR*, 550 U.S. at 418–21).

The level of ordinary skill in the art is reflected by the prior art of record. *See Okajima v. Bourdeau*, 261 F.3d 1350, 1355 (Fed. Cir. 2001); *In re GPAC Inc.*, 57 F.3d 1573, 1579 (Fed. Cir. 1995); *In re Oelrich*, 579 F.2d 86, 91 (CCPA 1978).

We analyze the asserted grounds of unpatentability in accordance with the

above-stated principles.

C. Obviousness over Bissett, Kartman, and Ohmstedt

In view of the instructions from the Federal Circuit on remand, we follow the guidelines for agency review set forth in *In re Sang-Su Lee*. *Cutsforth*, 636 F. App'x at 579 (citing *Sang-Su Lee*, 277 F.3d 1338). Specifically, we note the requirement that the agency "provide an administrative record showing the evidence on which the findings are based, accompanied by the agency's reasoning in reaching its conclusions." *Sang-Su Lee*, 277 F.3d at 1342 (citing *In re Zurko*, 258 F.3d 1379, 1386 (Fed. Cir. 2001); *In re Gartside*, 203 F.3d 1305, 1314 (Fed. Cir. 2000)).

Petitioner argues that claims 1–24 would have been obvious over Bissett, Kartman, and Ohmstedt. Pet. 8–27; Pet. Reply 5–15. Patent Owner disputes Petitioner's position, arguing the proposed combination fails to render the challenged claims obvious. Prelim. Resp. 19–27; PO Resp. 18–50. We have reviewed the Petition, Patent Owner's Response, Petitioner's Reply, the additional briefing filed after the Federal Circuit's decision in *Cutsforth*, as well as the relevant evidence discussed in those papers and other record papers. As described in further detail below, we determine that the record supports Petitioner's contentions for claims 1–4, 6–7, and 9–24, challenged as obvious over Bissett, Kartman, and Ohmstedt, and we adopt Petitioner's contentions discussed below as our own. For reasons that follow, we determine that Petitioner has shown by a preponderance of the evidence that claims 1–4, 6–7, and 9–24 would have been obvious over Bissett, Kartman, and Ohmstedt. Furthermore, we determine that Petitioner has failed to establish by a preponderance of the evidence that claims 5 and 8 are unpatentable.

1. Overview of Bissett (Ex. 1005)

Bissett relates to a brush assembly for a dynamoelectric machine. Ex. 1005, 1:9–10. The Bissett brush assembly is removable so that the brush can be replaced while the machine is running. *Id.* at 1:10–13. Figure 1 of Bissett is reproduced below.

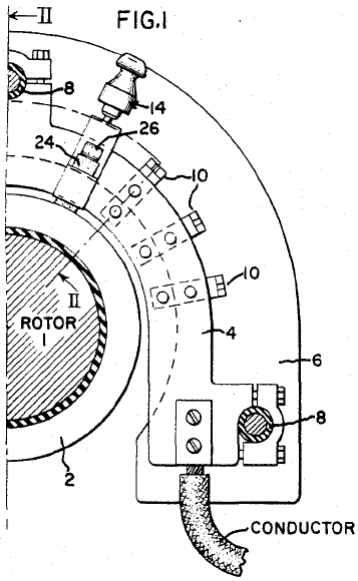

Figure 1 shows the general arrangement of a brush mounted in relation to the machine. *Id.* at 1:41–43. Brush 24 and spring 26, as shown in Figure 1, are disposed on a brush support backplate 10 around brush frame 4 such that brush 24 contacts the surface of the rotating collector ring 2. *Id.* at 1:51–57, 2:5–8. Removable handle 14 operates to detach the brush assembly from brush frame 4 to allow removal of worn generator brush 24. *Id.* at 2:44–62.

Illustrating the removed brush assembly 12 is Figure 4 of Bissett, reproduced below.

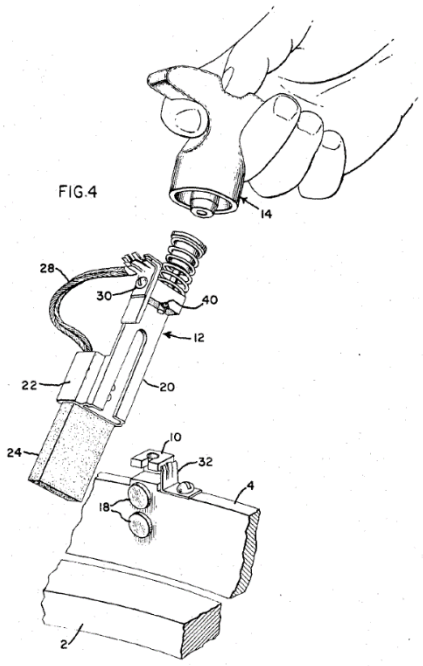

Figure 4 depicts brush assembly 12 disconnected from backplate 10 and removable handle 14 disconnected from brush assembly 12. *Id.* at 2:63–67. Brush assembly 12 comprises L-shaped member 20 configured as an elongated side that slides into a securely held position relative to dovetails 18. *Id.* at 1:68–72. L-shaped member 20 further comprises brush holder 22 configured as a hollow rectangular structure that accommodates brush 24. *Id.* at 2:1–5.

2. Overview of Ohmstedt (Ex. 1003)

Ohmstedt discloses a brush mounting device that allows "brush maintenance [to] occur while the machine is under load and voltage is applied to the brushes." Ex. 1003, 2:64–66. Figure 1 of Ohmstedt is reproduced below.

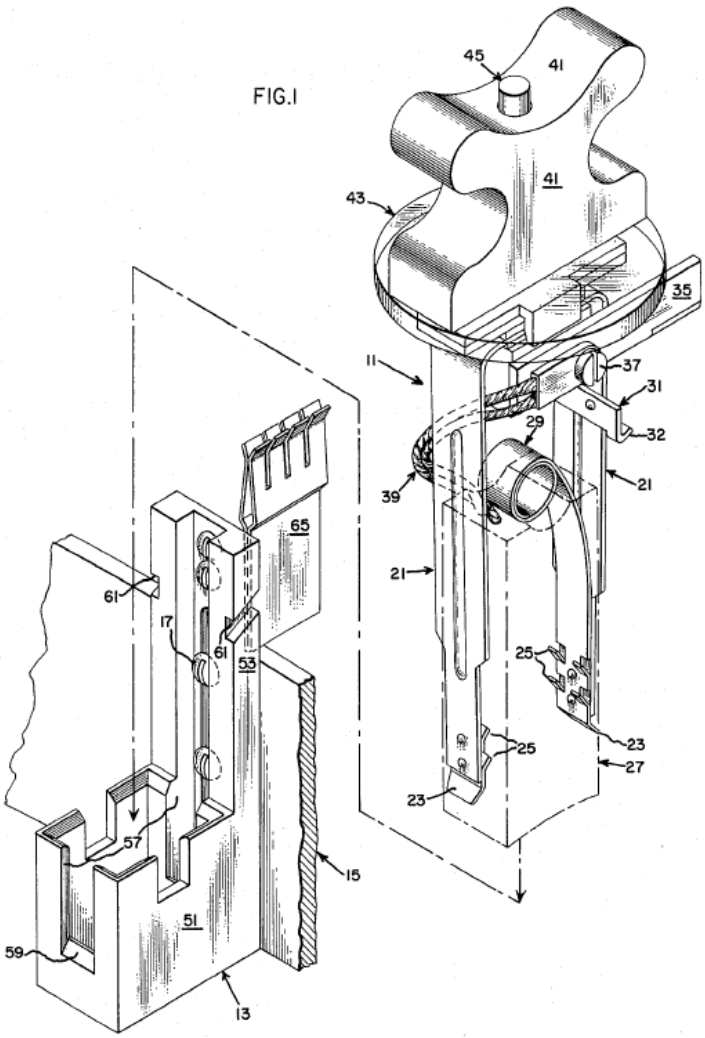

As shown above in Figure 1, Ohmstedt discloses a brush mounting device that includes brush holder 11 having brush 27 and brush box 13 attached to bus ring 15. Ex. 1003, 2:5–7. Ohmstedt discloses that brush box 13 is fixed to bus ring 15, while brush holder 11 and brush 27 are removable from brush box 13 and the dynamoelectric machine. *Id*. at 2:59–62. Furthermore, Ohmstedt discloses that brush holder 11 provides divergent portions 23 that can engage, slidably, ramps 59 to cause the brush holder to release the brush, which "floats" in the rectangular portion of the brush box and is in contact with the collector ring under pressure

exerted by coil spring 29. *Id*. at 2:37–44. Additionally, Ohmstedt discloses inwardly extending teeth 25 for tightly gripping the electrically conductive brush 27. *Id*. at 2:15–17.

3. Overview of Kartman (Ex. 1004)

Kartman discloses a brush holder assembly for use in a dynamoelectric machine, such as a motor or generator. Ex. 1004, Abstract, 3:34. The assembly is mounted on a frame of the machine such that the brushes engage with the machine's rotatable commutator. *Id.* at 3:32–36. The components of the brush holder assembly are concentrated in a central location and in closely spaced relation to each other to allow for fast and safe service, such as adjustment or removal of the brush or brush holder. *Id.* at 3:37–41, 4:25–31, 5:46–51. Furthermore, the brush holders are attached, side-by-side, to the assembly, each by a detachable connection that permits their individual replacement. *Id*. at Abstract.

One embodiment of the Kartman brush holder assembly 1 mounted on frame 2 of a machine is depicted in Figure 1, reproduced below.

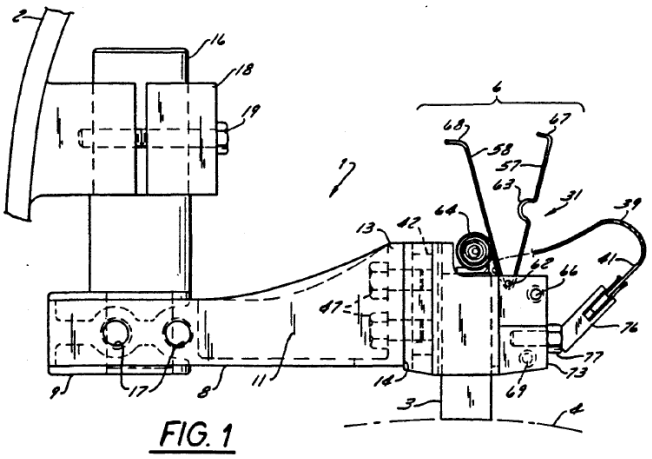

FIG. 1

As shown in Figure 1 above, brush holder assembly 1 comprises casting 8 with mounting surface 14, "to which a plurality of individual brush holders are

detachably connected." *Id.* at 3:51–52. Each individual brush holder 31 is connected—detachably, mechanically, and electrically—to mounting surface 14. *Id.* at 3:62–64. Brush holder 31 slidably receives brush 3, which is held in the operative position against the curved surface of commutator 4 by constant brush force applying means 54 that includes force spring 64. *Id.* at 4:32–36, 45–48.

An exploded view of brush holder assembly 1, illustrating details of brush holder 31, brush 3, and constant brush force applying means 54, is shown in Figure 3, reproduced below.

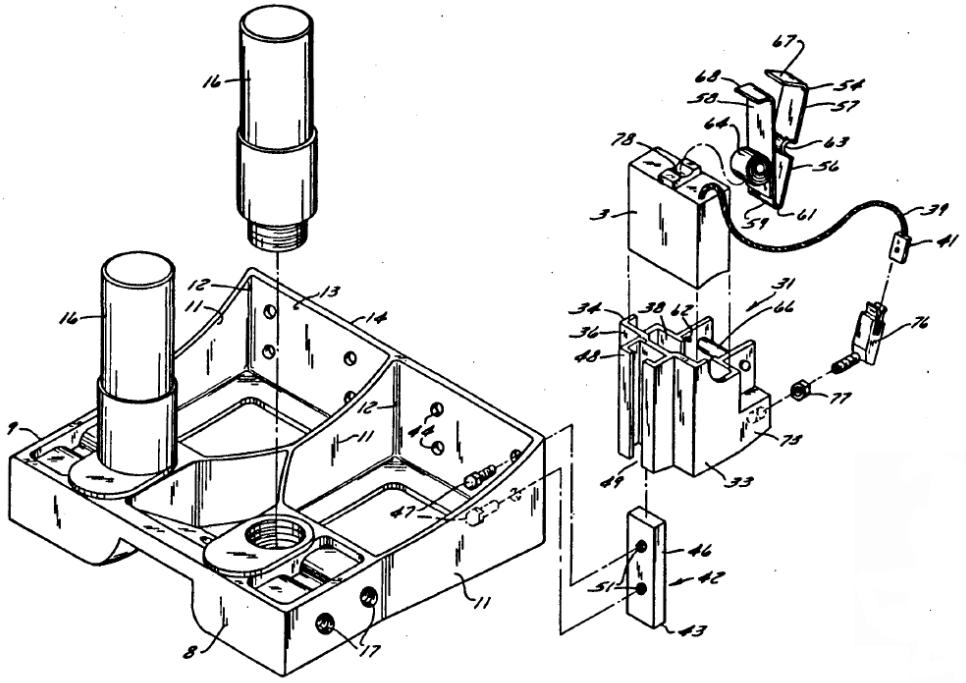

FIG. 3

Figure 3 further depicts detachable connecting means 42 for connecting brush holder 31 to mounting surface 14. *Id*. at 3:62–66. Means 42 comprises quick-release clamp bar 46, having a pair of threaded apertures 51 that align with the pair of vertically spaced-apart holes 44 on mounting surface 14. *Id.* at 4:9–17. Sliding quick-release clamp bar 46 into rear channel 48 of brush holder 31 and

tightening cap screws 47 through threaded apertures 51 results in a compressive force on clamp bar 46 that secures brush holder 31 to casting 8 of brush holder assembly 1. *Id.* at 4:17–26. Unscrewing slightly cap screws 47 to an unclamped position releases clamp bar 46 from the compressive force, thus permitting the adjustment or removal of the brush box. *Id.* at 4:26–31.

4. Analysis

Petitioner argues that the challenged claims would have been obvious over a combination of the brush holder assemblies taught in Bissett, Kartman, and Ohmstedt. Pet. 8. Specifically, Petitioner argues that a person of ordinary skill in the art would have been motivated to combine Bissett, Kartman, and Ohmstedt because each reference teaches removable brush holders providing for simple, safe, and efficient removability of brushes for use with dynamoelectric machines. Pet. 8–9 (citing Ex. 1003, Abstract, 1:28–37; Ex. 1004, Abstract, 1:58–2:7; Ex. 1005, 1:9–13, 1:22–25). The background of the ’018 patent states that “[i]t would be desirable to provide a brush assembly . . . which enables quick, safe replacement of brushes.” Ex. 1001, 1:48–51. Bissett, a patent filed in 1966—more than thirty-five years before the earliest date to which the ’018 patent claims priority—similarly identifies a desire to provide brush assemblies that permit quick and safe replacement of brushes. Ex. 1005, 1:9–21 (“It would be desirable if generator brushes were replaceable during operation without shutting down the machine while at the same time affording complete safety to an operator performing the replacement.”). Likewise, Kartman and Ohmstedt discuss a desire to provide quick and safe replacement of brushes. (Ex. 1004, 1:64–68 (prior art brush assemblies make “access difficult, time consuming, expensive, and less safe); Ex. 1003, 1:28–30 (“improved brush retention means for maintenance.”)).

We determine that the cited prior art of Bissett, Kartman, and Ohmstedt are directed to same subject matter as the ’018 patent, namely, improved brush holder assemblies.

With respect to its proposed combination, Petitioner argues that it would have been obvious to adapt the brush holder component 12 of Bissett to include the brush catch of Ohmstedt, whereby the divergent portions (23 of Ohmstedt) would extend downward from the Bissett channel such that teeth (25 of Ohmstedt) engage the Bissett brush 24. Pet. 10 (citing Ex. 1005, Fig. 4; Ex. 1003, 1:14–18, 28–50). Provided below are Figure 4 of Bissett (left) and Figure 2 of Ohmstedt (right), as annotated by Petitioner:

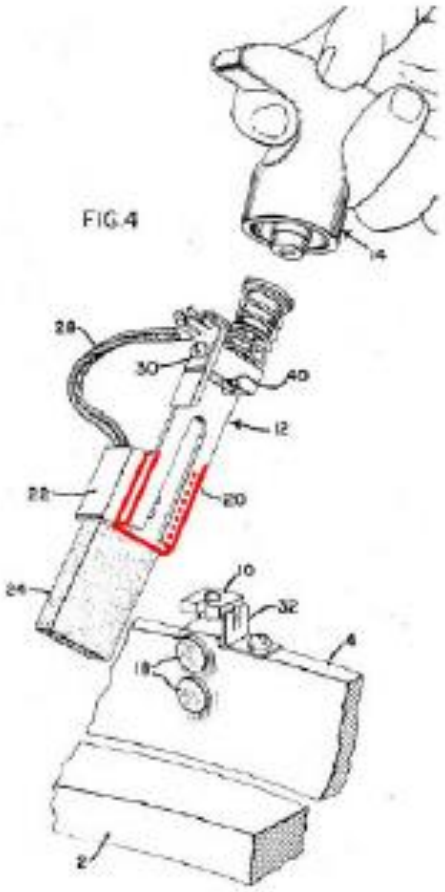

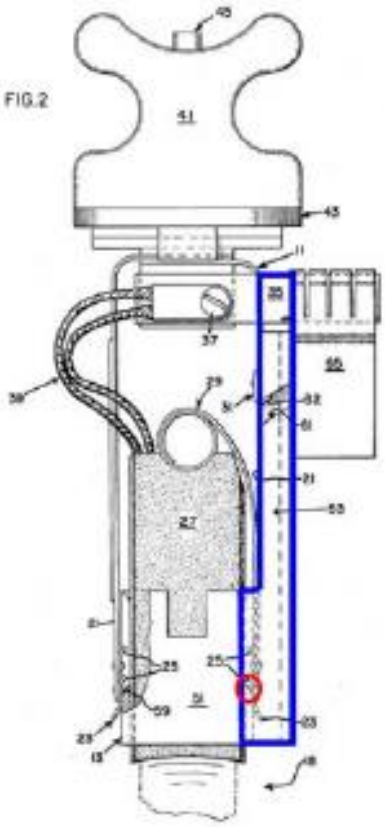

Pet. 10–11 (citing Ex. 1005, Fig. 4; Ex. 1003, Fig. 2). Petitioner argues that for its proposed combination, the modified brush holder component 12 of Bissett would also include the Ohmstedt brush release (circled in red in the annotated Figure 2 of Ohmstedt above) in a position to engage the brush catch below the mounting block of Bissett (dovetails 18). Pet. 10–11. Petitioner argues that Ohmstedt's brush release on the Bissett mounting block (dovetails 18) would achieve the advantages expressly sought by Ohmstedt, including allowing the brush to float in the brush holder of Bissett. Pet. 13–14 (citing Ex. 1003, Fig. 2, 2:37–45). We note that the cited portion of Ohmstedt states that the divergent portions (23 of Ohmstedt) "slidably engage ramps 59 to spread apart the inwardly biased brush holder legs thereby causing the brush holder to release the brush to 'float' in the rectangular portion of the brush box in contact with the collector ring." Ex. 1003, 2:38–45.

Petitioner argues that such a modification to Bissett using Ohmstedt would be a common sense alternative that would predictably achieve the same result. Pet. 14 (citing Ex. 1003, 1:28–30; *Perfect Web Techs., Inc. v. InfoUSA, Inc.*, 587 F.3d 1324, 1329 (Fed. Cir. 2009) ("use of common sense does not require a 'specific hint or suggestion in a particular reference,' only a reasoned explanation that avoids conclusory generalizations")). "An obviousness determination is not the result of a rigid formula disassociated from the consideration of the facts of a case. Indeed, the common sense of those skilled in the art demonstrates why some combinations would have been obvious where others would not." *Leapfrog*, 485 F.3d 1157, 1161 (Fed. Cir. 2007) (citing *KSR*, 550 U.S. at 416 ("The combination of familiar elements according to known methods is likely to be obvious when it does no more than yield predictable results.")). As discussed below, we determine Petitioner's common sense alternative rationale to be a reasoned analysis with evidentiary support and not a wholesale substitute for analysis. *See Arendi*

S.A.R.L. v. Apple Inc., Google Inc., and Motorola Mobility LLC, No. 2015-2073, 2016 WL 4205964, at *5 (Fed. Cir. Aug. 10, 2016). With respect to Petitioner's proposed combination, both Bissett and Ohmstedt are directed to providing improved brush holder assemblies. *See* Ex. 1003, 1:28–30; Ex. 1005, 1:9–21. Additionally, as noted by Petitioner, Ohmstedt expressly identifies Bissett. Pet. 9 (citing Ex. 1003, 1:14–18). Ohmstedt states:

> U.S. Pat. No. 3,432,708 to Bissett, issued Mar. 11, 1969 and assigned to the assignee of the present invention, shows a brush holder device, with a removable handle, *having no positive means for retaining the brush during maintenance operations*.

Ex. 1003, 1:14–18 (emphasis added). As Ohmstedt identifies, the Bissett and Ohmstedt patents were owned by the same assignee, General Electric Company. *See* Ex. 1003, 1; Ex. 1005, 1:3–4. Accordingly, Ohmstedt expressly identifies that the brush holder assembly in a previous General Electric patent, Bissett, lacked a positive means for retaining the brush during maintenance operations. *See* Ex. 1003, 1:14–18. Ohmstedt describes that its brush holder assembly, however, provides such a positive means for retaining the brush during maintenance by providing divergent portions 23 with "inwardly extending teeth 25 for tightly gripping an electrically conductive brush 27." Ex. 1003, 2:14–17. We determine that the record supports Petitioner's allegation that a person of skill in the art would have found it a common sense alternative, in view of Bissett and Ohmstedt, to predictably achieve the same result, i.e. providing a removable brush holder assembly including a brush catch and brush release for "improved brush retention means for maintenance." Pet. 14 (citing Ex. 1003, 1:28–30). In fact, we determine that Ohmstedt expressly teaches a person of ordinary skill in the art to consider its brush catch as an improvement upon Bissett's brush holder assembly by noting the

deficiency that Bissett has "no positive means for retaining the brush during maintenance operations." Ex. 1003, 1:14–18.

As the Supreme Court noted in *KSR*, "[t]o determine whether there was an apparent reason to combine the known elements in the way a patent claims, it will often be necessary to look to interrelated teachings of multiple patents." *KSR*, 550 U.S. at 401. We determine that teachings of Ohmstedt are interrelated with the teachings of Bissett, as Ohmstedt expressly cites to Bissett. *See* Ex. 1003, 1:14–18. In fact, Petitioner's challenge here relies upon Ohmstedt to remedy the same deficiency in Bissett that was expressly noted in Ohmstedt. *See* Pet. 13 (citing Ex. 1003, 1:14–18). Furthermore, both Bissett and Ohmstedt were directed to the same problem, improving brush holder assemblies. *KSR*, 550 U.S. at 419–420 ("One of the ways in which a patent's subject matter can be proved obvious is by noting that there existed at the time of invention a known problem for which there was an obvious solution encompassed by the patent's claims."). In view of the foregoing, we determine Petitioner has presented and sufficiently established an "articulated reasoning with some rational underpinning to support the legal conclusion of obviousness" and we adopt its contentions as our own. *Id.* at 418 (quoting *In re Kahn*, 441 F.3d 977, 988 (Fed. Cir. 2006) (internal quotation marks omitted)). Accordingly, we determine the record supports Petitioner's proposed combination of Ohmstedt's brush catch with Bissett's brush holder assembly.

Petitioner's proposed combination also involves the integration of mounting block 42, disclosed in Kartman, into the Bissett brush holder assembly. Pet. 12. Petitioner argues that both Bissett and Kartman disclose brush holders with channels having T-shaped cross sections for engaging mounting structures with T-shaped cross sections. Pet. 12–13 (citing Ex. 1004, Fig. 3, 4:19–22; Ex. 1005, Fig. 4, 1:63–64). In light of these common structures, Petitioner proposes that it would

have been obvious to modify the mounting block (dovetails 18) of Bissett to include the mounting block 42 of Kartman. Pet. 11–12 (citing Ex. 1004, 4:19–22, Ex. 1005, 1:63–64). Provided below are Figure 4 of Bissett (left) and Figure 3 of Kartman (right) below, as annotated by Petitioner.

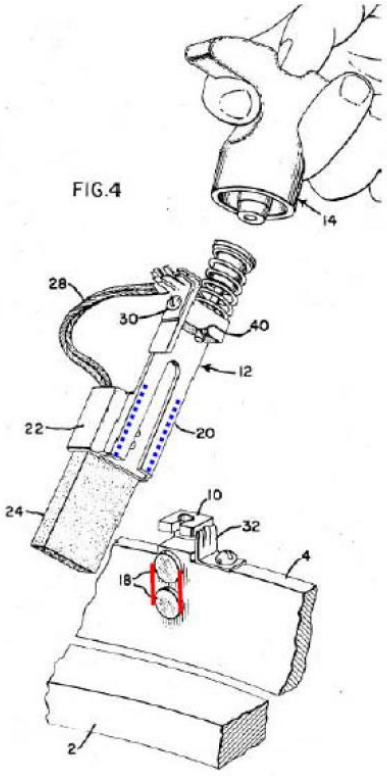

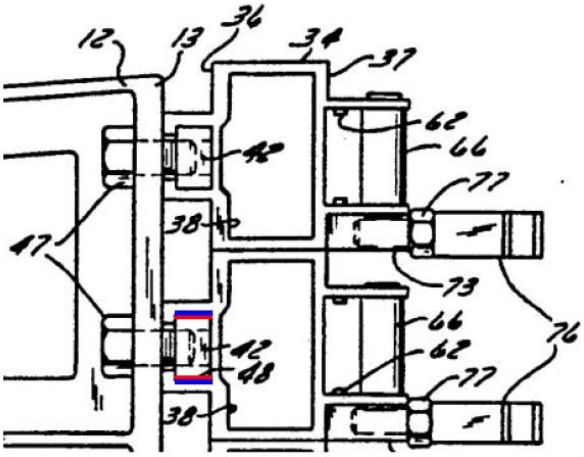

Pet. 12 (citing Ex. 1005, Fig. 4; Ex. 1004, Fig. 3). As annotated by Petitioner in Figure 4 of Bissett and Figure 3 of Kartman above, Petitioner proposes that the inner side surfaces (highlighted in blue in both figures above) of the channels of the removable components of both Bissett and Kartman engage the other side surfaces (highlighted in red in both figures above) of their respective mounting blocks. Petitioner argues that the Kartman mounting block 42 and Bissett mounting block (dovetails 18) have the same general footprint and serve the same purpose of coupling the removable component to the mounting component.

Pet. 12 (citing Ex. 1004, 4:19–22; Ex. 1005, 1:63–64). Bissett's mounting block structure is also illustrated in Figure 3 of Bissett reproduced below.

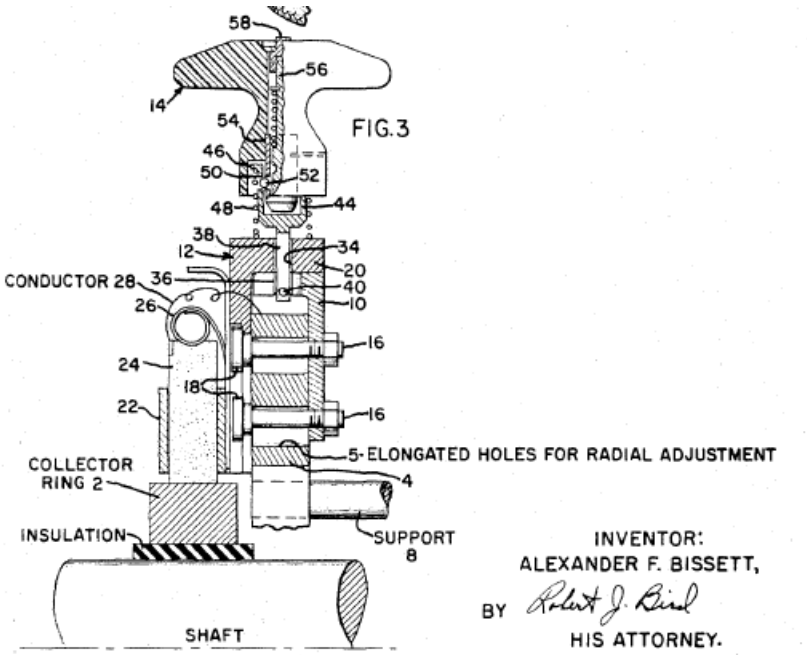

Ex. 1005, Fig. 3. As shown in Figure 3 above, Bissett discloses a mounting block comprising "heads 18 modified in the form of dovetails." Ex. 1005, 1:62–67. Kartman discloses a similar mounting block structure, as illustrated in Figure 3 of Kartman reproduced below.

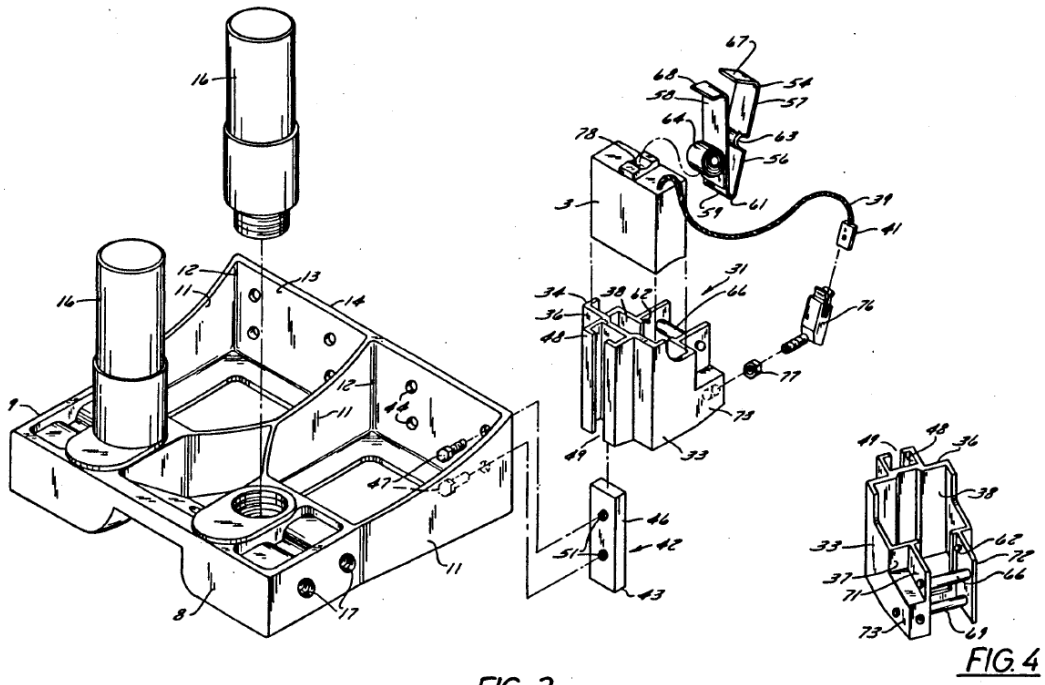

FIG. 3 FIG. 4

Ex. 1004, Fig.3. As shown above in Figure 3, Kartman discloses mounting block 42 having a quick release clamp bar 46 with internally threaded apertures 51 through which cap screws 47 may be tightened. Ex. 1004, 4:19–22. Kartman discloses brush holder 31 having a rear channel 48 "dimensioned to slidably receive the clamp bar 46 therein" and rear channel 48 having a "vertically extending slot 49 through which cap screws 47 may pass into the threaded apertures 51 in the clamp bar 46." Ex. 1004, 4:17–22. "The cap screws 47 may be tightened to a clamp position applying a compressive force to the clamp bar to secure the rear end of the associated brush box." Ex. 1004, 4:22–25.

Similar to above, Petitioner argues that the modification of the mounting block (dovetails 18) in Bissett with the mounting block 42 in Kartman would have been a common sense alternative that would predictably achieve the same result. Pet. 14 (citing *Perfect Web Techs., Inc. v. InfoUSA, Inc.*, 587 F.3d 1324, 1329 (Fed. Cir. 2009) ("use of common sense does not require a 'specific hint or

suggestion in a particular reference,' only a reasoned explanation that avoids conclusory generalizations.")). As Petitioner identifies, during the prosecution of Patent Owner's Application No. 11/096,990, titled "Brush Holder Assemblies Including Brush Holders With Handles," the Examiner rejected claims based on a modification of the brush holder of Ohmstedt with the T-shaped cross section of the Bissett mounting block (dovetails 18) "to provide secure removable connection." Pet. 13 (citing Ex. 1009 ¶ 12). Accordingly, as exemplified by the Examiner's rejection, a person of ordinary skill in the art would have considered a modification to the mounting block (dovetails 18) in Bissett to improve the functionality of the overall brush holder assembly. As the Supreme Court instructed in *KSR*, it is proper to "consider the inferences and creative steps a person of ordinary skill in the art would employ." 550 U.S. at 401. Here, the proposed modification of the mounting block (dovetails 18) in Bissett with the mounting block 42 in Kartman would only have required minor modifications, as identified by Petitioner, to the structures in Bissett, as the Kartman mounting block 42 and Bissett mounting block (dovetails 18) have the same general footprint and serve the same purpose of coupling the removable component to the mounting component. *See* Pet. 12 (citing Ex. 1004, 4:19–22; Ex. 1005, 1:63–64). Based on the foregoing, we determine Petitioner has provided a sufficient rationale for the combination of Bissett and Kartman. *KSR*, 550 U.S. at 418. Accordingly, we determine the record supports Petitioner's proposed modification of Bissett's mounting block with Kartman's mounting block, and we adopt Petitioner's contentions as our own.

a. Claim 1[a]

The preamble of claim 1 recites "[a] brush holder assembly for holding a brush having a conductive element, the brush holder assembly comprising." For

this claim limitation, Petitioner argues that Bissett discloses a brush holder assembly for holding a brush having a conductive element. Pet. 14 (citing Ex. 1005, 1:9–13, Figs. 1–4 ("Bissett 'relates to a removable brush arrangement whereby a collector brush can be installed and removed from a dynamoelectric machine while the machine is running.'")). Petitioner also argues that Ohmstedt and Kartman similarly disclose brush holder assemblies for holding a brush having a conductive element. Pet. 14 (citing Ex. 1003, Figs. 1, 2; 1:5–8, 2:5–49, 3:2–12; Ex. 1004, 3:33–37, Figs. 1–4). We agree. All three references, Bissett, Kartman, and Ohmstedt, disclose the claimed "brush holder assembly for holding a brush having a conductive element." Thus, we adopt Petitioner's contention as our own.

b. Claim 1[b]

Claim 1[b] recites "an elongate mounting block having a major axis, an upper end and a lower end, and first and second outer side surfaces substantially parallel to said major axis, and including a stationary brush release proximate said lower end." Petitioner argues that the proposed Bissett/Kartman mounting block provides a major axis, an upper end and a lower end, and first and second outer side surfaces substantially parallel to the said major axis. Pet. 14–15 (citing Ex. 1005, Figs. 3–4, 1:61–2:1; Ex. 1004, Figs. 2–3; 3:62–4:31). Petitioner further argues that the proposed Bissett/Kartman mounting block, as shown in the annotated Figure 4 of Bissett (left) and Figure 3 of Kartman (right) above, has a T-shaped cross-section designed to fit into the T-shaped channel of Bissett. Pet. 15. Because the proposed Bissett/Kartman mounting block, as shown above, has first and second outer side surfaces that are substantially parallel, we determine that the record supports Petitioner's contention and we adopt it as our own.

As to the additional claim 1 limitation requiring "a stationary brush release proximate said lower end," Petitioner argues that Ohmstedt provides motivation to

add a stationary brush release 59 (circled in red in annotated Figure 2 of Ohmstedt above) to the Bissett/Kartman mounting block proximate the lower end. Pet 15 (citing Ex. 1003, Figs. 1, 2, 2:37–49). As discussed above, we determine Petitioner has presented sufficiently an "articulated reasoning with some rational underpinning" (*KSR*, 550 U.S. at 418) to support its contention that a person of skill in the art would have been motivated to combine Ohmstedt's brush catch with Bissett's brush holder assembly. Similarly, we determine Petitioner has sufficiently articulated reasoning for adding Ohmstedt's stationary brush release proximate to the lower end, as it is a part of Ohmstedt's brush catch. In view of the foregoing, we determine the record supports Petitioner's contentions for this claim limitation, and we adopt Petitioner's contentions as our own.

c. Claim 1[c]

Claim 1[c] recites "a brush holder component adapted for removably mounting to the mounting block, the brush holder component comprising a brush box and a channel for receiving a portion of the mounting block therein, the channel including first and second inner side surfaces." Petitioner argues that Bissett discloses a brush holder component 12 adapted for removably mounting to the mounting block 18, the brush holder component 12 comprising a brush box 22 and a channel for receiving a portion of the mounting block 18 therein, the channel including first and second inner side surfaces. Pet. 15 (citing Ex. 1005 at Figs. 3–4; 1:61–2:1). Petitioner argues that the channel for receiving a portion of Bissett's mounting block 18 is provided on brush holder component 12 highlighted in red in Petitioner's annotated version of Figure 4 of Bissett, reproduced on the left below, and the channel includes a first and second inner side surfaces, highlighted in blue in Figure 4 of Bissett reproduced below on the right.

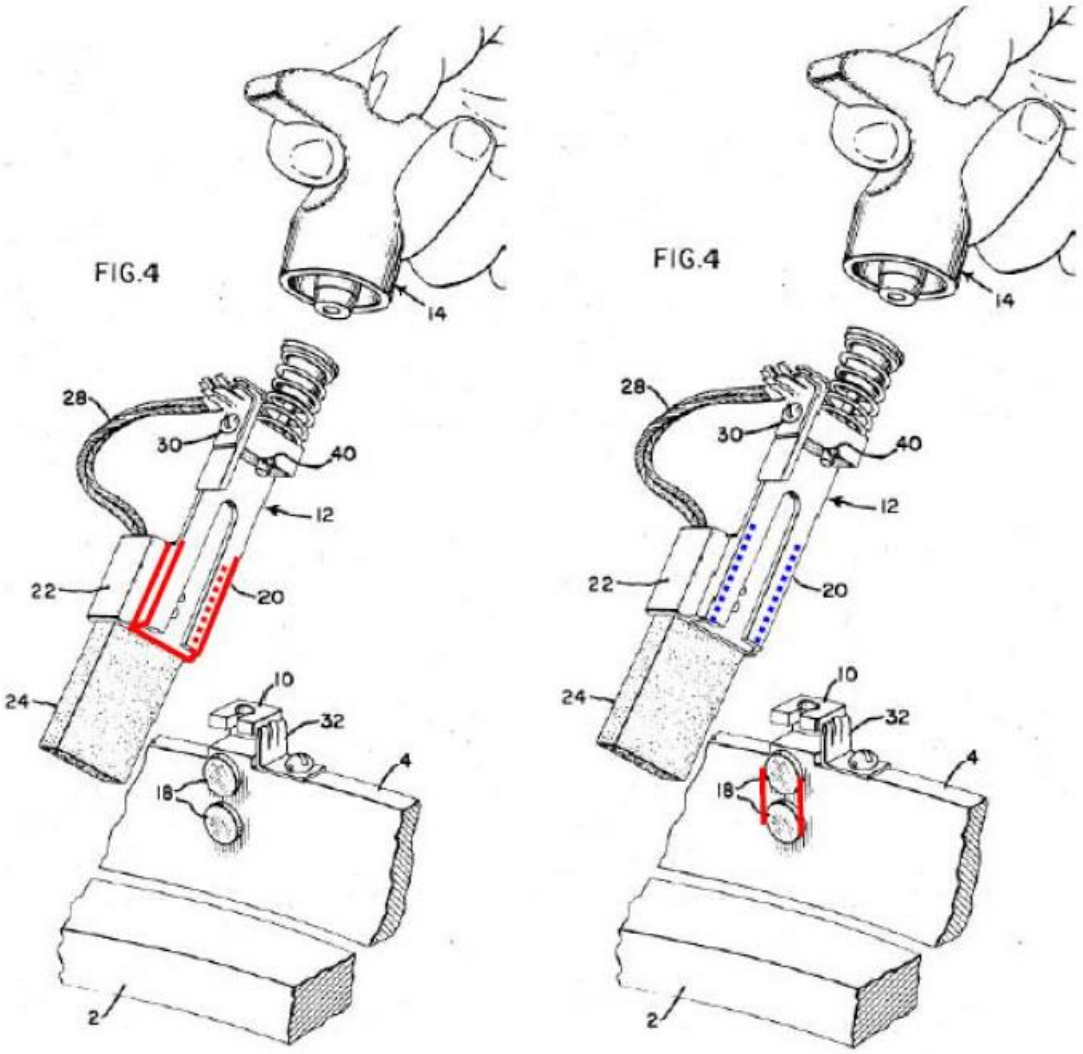

Pet. 15–16 (citing Ex. 1005, Fig. 4). As shown above in Bissett's Figure 4, we determine that Bissett's brush holder component 12 and associated figures disclose a brush holder component with a channel for receiving a portion of the mounting block and include a first and second inner side surfaces, as recited in claim 1. In view of the foregoing, we determine the record supports Petitioner's contentions for this claim limitation, and we adopt Petitioner's contentions as our own.

d. Claim 1[d]

Claim 1[d] also recites "the brush holder component further comprising a brush catch having a first position and a second position, the brush catch preventing sliding movement of a brush within the brush box in the first position, and the brush catch permitting sliding movement of a brush within the brush box in the second position." For this claim limitation, Petitioner cites to Ohmstedt's brush catch, including divergent portions 23 and teeth 25, which prevent the movement of brush 27 in a first position and permit the movement of brush 27 in the second position. Pet. 16 (citing Ex. 1003, Figs. 1, 2, 2:5–49; 3:8–12). Petitioner relies upon excerpts of Figures 1 (left) and 2 (right) from Ohmstedt, reproduced below, as illustrating the two claimed positions:

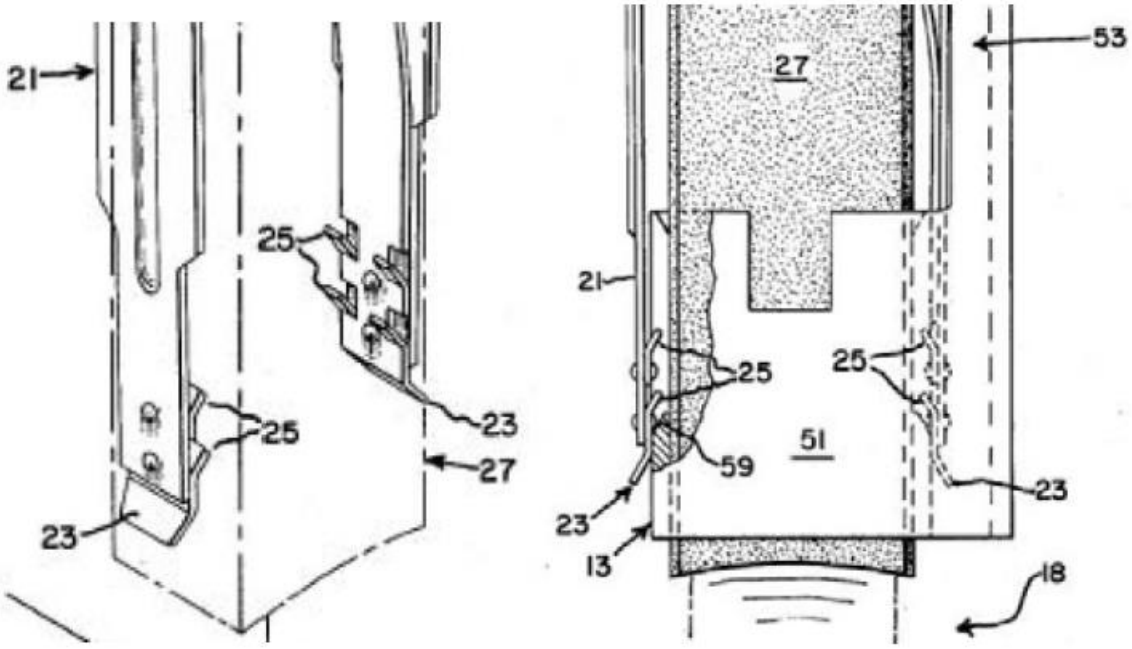

Ex. 1003, Figs. 1, 2. Petitioner argues that the first position, preventing movement of a brush within the brush box, is illustrated in Figure 1 of Ohmstedt reproduced above on the left. Ohmstedt discloses that the legs 21 provide divergent portions

23 and "teeth 25 for tightly gripping an electrically conductive brush 27." Ex. 1003, 2:13–17; *see also* Ex. 1003, 3:2–8:

> Thereafter, the brush holder is pulled away from the collector ring and as the brush holder slides from the rectangular portion of the brush box (tabs 59) the resilient, inwardly biased, legs of the brush holder engage the sides of the brush to provide positive retention of the brush while the brush holder and brush are being removed from the dynamoelectric machine.

Thus, we determine Ohmstedt discloses the claimed limitation of "the brush catch preventing sliding movement of a brush within the brush box in the first position." Furthermore, as shown above in Figure 2 of Ohmstedt the legs 21 can be spread apart to permit movement of the brush 27 within the brush box 22. Ex. 1003, Fig. 2, 2:37–45. Ohmstedt discloses that the divergent portions 23 "slidably engage ramps 59 to spread apart the inwardly biased brush holder legs thereby causing the brush holder to release the brush to 'float' in the rectangular portion of the brush box and in contact with the collector ring." Ex. 1003, 2:39–45. Therefore, Ohmstedt discloses the claimed first position and second position. In light of the cited disclosures, we determine that Bissett in view of Ohmstedt and Kartman teaches a brush catch having a first position preventing sliding movement of a brush and a second position permitting sliding movement of a brush, as recited in claim 1. In view of the foregoing, we determine the record supports Petitioner's contentions for this claim limitation, and we adopt Petitioner's contentions as our own.

e. Claim 1[e]

The last clause of claim 1 recites "wherein the stationary brush release is positioned on the mounting block so that when the brush holder component is mounted on the mounting block, the stationary brush release engages with the

brush catch, moving the brush catch into the second position." Petitioner argues that this claim limitation is taught by the same disclosure relied upon above from Ohmstedt regarding the second position of the brush catch. Pet. 17 (citing Ex. 1003, 2:15–17, 39–43). Ohmstedt discloses that the divergent portions 23 "slidably engage ramps 59 to spread apart the inwardly biased brush holder legs thereby causing the brush holder to release the brush to 'float' in the rectangular portion of the brush box and in contact with the collector ring." Ex. 1003, 2:39–45. Specifically, Petitioner argues that Ohmstedt's ramps 59 teach the claimed "stationary brush release" positioned on the mounting block. Pet. 17 (citing Ex. 1003, 2:15–17, 39–43). Furthermore, Petitioner argues that Ohmstedt's ramps 59 engage with Ohmstedt's brush catch 23, 25 and move the brush catch into the second position, which release the brush to permit sliding movement. Pet. 17 (citing Ex. 1003, 2:15–17, 39–43). In light of the cited disclosures, we determine that Bissett in view of Ohmstedt and Kartman teach a stationary brush release mounted on the mounting block that engages the brush catch, moving the brush catch into the second position, as recited in claim 1. In view of the foregoing, we determine the record supports Petitioner's contentions for this claim limitation, and we adopt Petitioner's contentions as our own.

f. Patent Owner's Arguments Against the Combination of Bissett and Kartman

Patent Owner argues that the Board should reject Petitioner's proposed modification of the mounting block of Bissett with the mounting block of Kartman. PO Resp. 18–19. Specifically, Patent Owner argues that Bissett teaches brush replacement based on the "one hand rule," in which an operator should not place two hands on an electrified device. *Id.* at 19–20 (citing Ex. 2019 ¶ 47). Patent Owner further argues that Kartman's detachable connecting means 42 requires the

operator to use two hands in manipulating tools to loosen cap screws 47. PO Resp. 25–26 (citing Ex. 1004, 4:22–25; Ex. 2019 ¶ 134). Thus, Patent Owner argues that Kartman's detachable connecting means 42 would make Bissett's device inoperable for its intended purpose by requiring the operator to violate the "one hand rule" to manipulate cap screws 47. *Id.*

We are not persuaded by Patent Owner's argument because Patent Owner fails to identify any disclosure in Bissett that requires operation in accordance with a "one hand rule." In an attempt to support Patent Owner's arguments that Bissett requires the "one hand rule," Patent Owner cites the following disclosure in Bissett:

> In collector brush assemblies generally known to the prior art, the manipulation[s] required to replace a brush are sometimes rather involved, usually calling for the shutdown of the generator.

PO Resp. 24 (citing Ex. 1005, 1:14–25). We are not persuaded by Patent Owner's assertion that this disclosure requires the Bissett device to use the "one hand rule," as the cited disclosure merely states that prior art devices usually required shutting down the generator to change brushes. *See* Ex. 1005, 1:14–25. Additionally, Patent Owner cites the following disclosure of Bissett as providing an "express invocation against the use of []tools" (PO Resp. 27) to manipulate the mounting block:

> Each brush assembly is installable and removable by an insulated handle[,] which is itself removable from each brush assembly so that only one such handle is required to service an entire generator.

PO Resp. 27 (citing Ex. 1005, 1:35–40). We are not persuaded that this disclosure is an "express invocation against the use of . . . tools" to manipulate the mounting block, but rather, a statement regarding the ability of an operator to use a single

insulated handle with multiple Bissett brush assemblies.

These cited disclosures from Bissett do not instruct an operator to use the "one hand rule." In fact, the term "one hand rule" is not mentioned in Bissett. As we are not persuaded by Patent Owner that the Bissett brush assembly requires compliance with a "one hand rule," we are not persuaded that the modification of the mounting block of Bissett with the mounting block of Kartman would have been contrary to the intended purpose of the Bissett brush assembly.

g. Patent Owner's Arguments Against the Combination of Ohmstedt with Bissett and Kartman

Patent Owner argues that Petitioner fails to offer any evidence to support the combination of Ohmstedt with Bissett and Kartman. PO Resp. 32–33.

First, Patent Owner argues that that the Ohmstedt inventors were aware of the Bissett brush assembly at the time of invention, but did not "do what [Petitioner] argues would have been a 'common sense alternative' and modify Bissett with the 'brush catch and brush release of Ohmstedt.'" PO Resp. 34. We are not persuaded that simply because one group of inventors did not make the combination proposed by Petitioner, that a person of ordinary skill in the art would not have found it obvious to make the combination. The action, or inaction, of the Ohmstedt group of inventors is not determinative of the obviousness of Petitioner's proposed combination.

Second, Patent Owner argues that Bissett and Ohmstedt use different structures, and that Ohmstedt teaches away from the Bissett brush assembly. PO Resp. 35–37. Specifically, Patent Owner argues that Ohmstedt teaches a permanently mounted brush box 13, which is contrary to Bissett's bolts 16 that provide dovetails 18 and backplate 10 for affixing the removable brush holder. PO Resp. 36–37 (citing Ex. 1003, Fig. 1; Ex. 1005, 1:61–66, 2:5–11, 16–29;

Ex. 2019 ¶¶ 95–96, 168). Patent Owner's arguments regarding Ohmstedt's brush box 13 are unpersuasive, because Petitioner's challenge does not rely upon Ohmstedt's brush box 13 as teaching the mounting block, but relies upon brush holder component 11 of Ohmstedt to modify brush holder component 12 of Bissett. *See* Pet. 15–17. Moreover, although Petitioner has shown that brush box 13 of Ohmstedt compares to the claimed mounting block, that comparison is made with regard to teaching a brush release positioned on the mounting block, for which, again, Petitioner relies on Bissett and Kartman. *See id.*

Third, Patent Owner argues that a person of ordinary skill in the art would not have combined Ohmstedt with Bissett and Kartman because the two designs are incompatible. PO Resp. 37–39. More particularly, Patent Owner argues that teeth 25, divergent portions 23, and ramps 59 disclosed in Ohmstedt are not suitable for incorporation into the Bissett brush assembly, because Ohmstedt's two ramps 59 remain in a fixed position and serve to separate divergent portions 23, so as to release the brush. PO Resp. 38 (citing Ex. 2019 ¶¶ 146, 166). Patent Owner alleges that incorporating Ohmstedt's mechanism would mean keeping the brush holder fixed in the machine. PO Resp. 39. In addition to arguing incompatibility, Patent Owner argues that Ohmstedt's brush box 13 could not be removed for cleaning while the machine was in operation. *Id.*

Petitioner's challenge proposes to "add a stationary brush release 59" from Ohmstedt "to the Bissett/Kartman mounting block, proximate the lower end." Pet. 15 (citing Ex. 1003, 2:37–49, Figs. 1, 2). Therefore, Petitioner proposes modifying the Bissett/Kartman mounting block by adding the brush release of Ohmstedt to the lower end of the Bissett/Kartman mounting block, not by adding brush box 13 of Ohmstedt to the Bissett/Kartman mounting block. *See id.* Accordingly, we are not persuaded by Patent Owner's argument.

h. Patent Owner's Arguments That the Combination Would Not Result in the Claimed Invention

Patent Owner argues that the proposed combination of Ohmstedt with Bissett and Kartman would not result in the claimed invention. PO Resp. 40. We address Patent Owner's arguments in turn.

First, Patent Owner argues that the proposed Bissett/Kartman mounting block would not "affix" the brush holder component in place, and, thus, does not meet the construction of "mounting block," i.e., "a base for affixing to another structure." PO Resp. 40–41. Specifically, Patent Owner argues that if the clamping action of Kartman's detachable connecting means 42 is not incorporated into Bissett's mounting block, then nothing would "affix" the brush holder component in place, and it would be ejected from the flat bar at 72 inches per second. PO Resp. 41 (Ex. 2019 ¶ 114).

In response, Petitioner identifies that Bissett's mounting block does, in fact, "affix" the brush holder because Bissett discloses that its brush assembly comprises "L-shaped member 20, the long side of which is bifurcated and modified with suitable shoulders so as to slide into a *securely held position* relative to dovetails 18." Pet. Reply 6 (citing Ex. 1005, 1:68–72) (emphasis added). In view of this disclosure in Bissett, we are not persuaded that Bissett's mounting block does not affix the brush holder.

Second, Patent Owner argues that the proposed Bissett/Kartman mounting block would not practice the claimed "mounting block" limitation because Bissett teaches away from the clamping action taught in Kartman, as Bissett teaches compliance with the "one hand rule." PO Resp. 44. As discussed above, we are not persuaded that the Bissett disclosure requires compliance with the so-called "one hand rule." Furthermore, Patent Owner argues that Kartman's detachable

connecting means 42 operates by lifting clamp bar 46, sliding the brush holder into position, and tightening cap screws 47. PO Resp. 44. Patent Owner argues that the upward and downward motion of clamp bar 46 "is not 'fixed,' and thus [Petitioner's] proposed apparatus lacks a 'mounting block.'" *Id*. at 45. Contrary to Patent Owner's arguments, we determine that Kartman teaches that tightening cap screws 47 secures the brush holder into position, and, thus, serves as a "a base for affixing to another structure." Ex. 1004, 3:62–4:31 ("cap screws 47 may be tightened to a clamp position applying a compressive force to the clamp bar"), 5:16–19 ("The cap screws 47 are then tightened causing the clamp bar 46 to compressively engage the rear channel 48 and lock it into position against the mounting surface 14.").

Third, Patent Owner argues that Petitioner's proposed combination would not satisfy the "removably mounting" limitation under Patent Owner's proposed construction of the term. PO Resp. 45. As discussed above, we do not adopt Patent Owner's proposed construction of the term "removably mounting;" thus, Patent Owner's argument is moot.

Based on the foregoing discussion and the record, including the secondary considerations of nonobviousness discussed below, we determine that the record supports Petitioner's contentions that claim 1 would have been obvious in view of Bissett, Kartman, and Ohmstedt and we adopt these contentions as our own.

i. Claim 2

Claim 2 recites that "the brush catch is adapted to move to the first position when the brush catch is disengaged from the stationary brush release." Ex. 1001, 18:21–23. Petitioner argues that Bissett in view of Kartman and Ohmstedt teaches claim 2 because Ohmstedt's brush catch 23, 25 is adapted to move to the first

position when the brush catch 23, 25 is disengaged from the stationary brush release 59. Pet. 18 (citing Ex. 1003, 2:15–17, 39–43). More particularly, Petitioner argues that Figure 1 of Ohmstedt shows brush catch 23, 25 in the first position and when in this first position, "inwardly extending teeth 25 [are] tightly gripping an electrically conductive brush 27." Pet. 18 (quoting Ex. 1003, 2:15–17, 39–43, Fig. 1). Figure 1 of Ohmstedt is reproduced below:

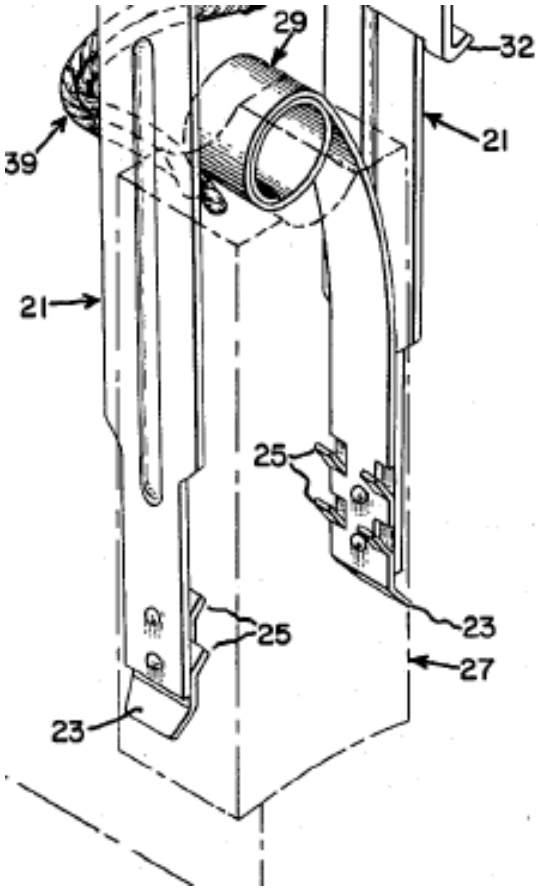

Ex. 1003, Figure 1.

As shown above in Figure 1, Ohmstedt teaches that brush catch 23, 25 is adapted to move to the first position when the brush catch 23, 25 is disengaged from the stationary brush release 59. Specifically, Ohmstedt discloses that when the brush holder is "pulled away from the collector ring and . . . brush box (tabs 59)[,] the resilient, inwardly biased, legs of the brush holder engage the sides of the

brush to provide positive retention of the brush while the brush holder and brush are being removed from the dynamoelectric machine." Ex. 1003, 3:2–8. Based on the foregoing discussion and the record, including the secondary considerations of nonobviousness discussed below, we determine that the record supports Petitioner's contentions that claim 2 would have been obvious in view of Bissett, Kartman, and Ohmstedt and we adopt these contentions as our own.

j. Claim 3

Claim 3 recites that "the brush holder component is mounted to the mounting block, at least a portion of the mounting block is disposed within the channel such that at least a portion of the first and second outer side surfaces of the mounting block are disposed between the first and second inner side surfaces of the channel." Ex. 1001, 18:24–30. Petitioner argues that Bissett in view of Kartman and Ohmstedt teaches claim 3 because when brush holder component 12 is mounted to the Bissett/Kartman mounting block, at least a portion of the mounting block is disposed within the channel. Pet. 18 (citing Ex. 1005 Fig. 4, Ex. 1004, Fig. 2). More particularly, Petitioner argues that at least a portion of the first and second outer side surfaces of the mounting block are disposed between the first and second inner side surfaces of the channel. *Id*. Figure 4 of Bissett and Figure 2 of Kartman both illustrate their respective mounting blocks are disposed within a channel. Ex. 1005, Fig. 4; Ex. 1004, Fig. 2. Based on the foregoing discussion and the record, including the secondary considerations of nonobviousness discussed below, we determine that the record supports Petitioner's contentions that claim 3 would have been obvious in view of Bissett, Kartman, and Ohmstedt and we adopt these contentions as our own.

k. Claim 4

Claim 4 recites the "the mounting block includes a mounting aperture

extending there through, and wherein when the brush holder component is mounted to the mounting block, at least a portion of the mounting aperture is disposed within the channel." Ex. 1001, 18:31–35. Petitioner argues that Bissett in view of Kartman and Ohmstedt teaches claim 4 by disclosing Kartman's fastener 47 that extends through apertures 51 in the mounting block 42. Pet. 19 (citing Ex. 1003,[8] Figs. 2–3, 3:62–4:31). Petitioner cites to Kartman's disclosure that "[t]he rear channel includes a vertically extending slot 48 through which cap screws 47 may pass into threaded apertures 51 in the clamp bar." Pet. 19 (quoting [Ex. 1004], 4:19–22, Fig. 2, 3). In view of Figures 2 and 3 of Kartman, we determine the proposed Bissett/Kartman mounting block includes a mounting aperture such that when the brush holder component 12 is mounted to the mounting block, as least a portion of the mounting aperture is disposed within the channel. *See id*. Based on the foregoing discussion and the record, including the secondary considerations of nonobviousness discussed below, we determine that the record supports Petitioner's contentions that claim 4 would have been obvious in view of Bissett, Kartman, and Ohmstedt and we adopt these contentions as our own.

l. Claim 5

Claim 5 recites that the "mounting block includes a spring that applies spring force against at least a portion of the brush holder component." Ex. 1001, 18:37–38. With respect to claim 5, Petitioner argues the following in the Petition:

> Bissett in view of Kartman and Ohmstedt discloses the brush holder assembly of claim 1, and one of ordinary skill in the art

[8] We note that the Petition cites to Ex. 1003 but, given the reference to Kartman and Kartman's structures, we understand that to be a typographical error and the intended citation was to Ex. 1004.

> would understand that the modified Bissett/Kartman mounting block includes a spring (lead receptacle 32) that applies spring force against at least a portion (knife-edge clip 30) of the brush holder component 12 when the brush holder component 12 is mounted to the mounting block. (Ex. 1005 at Fig. 4; 2:12–15).

Pet. 19–20. In response to the Petition, Patent Owner argued that the cited structures from Bissett failed to teach the requirements of claim 5 because Bissett's lead receptacle 32 is not a part of the purported mounting block (dovetails 18) disclosed in Bissett. PO Resp. 47 (citing Ex. 1005, Fig. 4). Petitioner countered in its Reply Brief that the fact that "component 32 is bolted to frame 4 is nothing but a *design choice*." Pet. Reply 12 (emphasis added).

After the Federal Circuit's remand to the Board (Paper 38), Patent Owner sought additional briefing on the basis that, among other things, it was denied the opportunity to address "whether one of skill would have made the changes that are contemplated as they relate to a spring that was at issue and relating to claim 5." Paper 37, 2 (citations omitted). The Board granted the parties additional briefing to address this issue. Paper 37, 3.

In Petitioner's additional brief, Petitioner argues that "it would have been an obvious design choice to locate the spring of Bissett on the Bissett/Kartman mounting block." Pet. Remand Br. 1–2. More particularly, Petitioner argues that Ohmstedt provides an example of this known practice because Ohmstedt discloses a spring located on the mounting block portion of the brush holder assembly "for further holding the brush holder to the brush box." *Id*. at 2–3 (quoting Ex. 1003, 2:54–57). Petitioner argues that those of ordinary skill in the art would have made the design choice of locating the spring on the Bissett/Kartman mounting block given the advantages stated in Ohmstedt of having a spring in that location. *Id*. at 3. Petitioner's proposed illustration of this modification to its proposed

Bissett/Kartman mounting block is reproduced below.

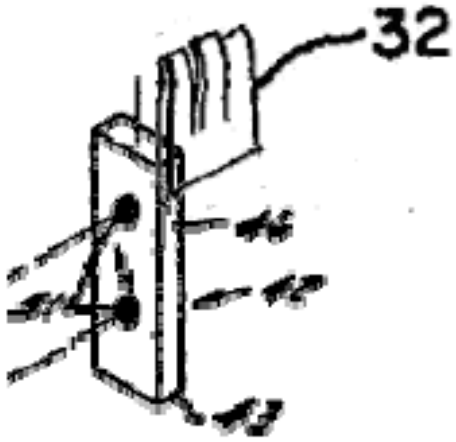

Obviousness Combination

Spring **32** of Bissett as part of the Bissett/Kartman mounting block

(Ex. 1005 at Fig. 2; Ex. 1004 at Fig. 3)

Pet. Remand Br. 4 (providing modifications to Ex. 1005, Fig. 2 and adding spring lead receptacle 32 from Ex. 1004, Fig. 3). As shown above, Petitioner proposes that Bissett's spring lead receptacle 32 be relocated to near the top of Kartman's clamp bar 42 of Petitioner's proposed Bissett/Kartman mounting block. *See id*.

In its additional briefing, Patent Owner counters that Petitioner's proposed modification of the Bissett/Kartman mounting block is improper because, among other things, Petitioner offers no expert statement confirming that a skilled artisan would have a reason to make the change as suggested by Petitioner. PO Remand Br. 3–5. More particularly, Patent Owner argues Ohmstedt fails to teach an

advantage to putting a spring so that it rises out of Bissett's mounting block. PO Remand Br. 3. Furthermore, Patent Owner argues that implementing the design change proposed by Petitioner would conflict with the operation of the structure in Bissett. PO Remand Reply 2. Patent Owner argues that if Bissett's spring lead receptacle 32 was relocated to Kartman's clamp bar 42 of the proposed Bissett/Kartman mounting block, as shown in Petitioner' annotated figure above, the spring lead receptacle 32 "would be buried by the metal frame beneath Bissett's mounting block or interfere with the slide path of Bissett's removable holder." PO Remand Reply 2. We agree.

Figure 4 of Bissett is reproduced below:

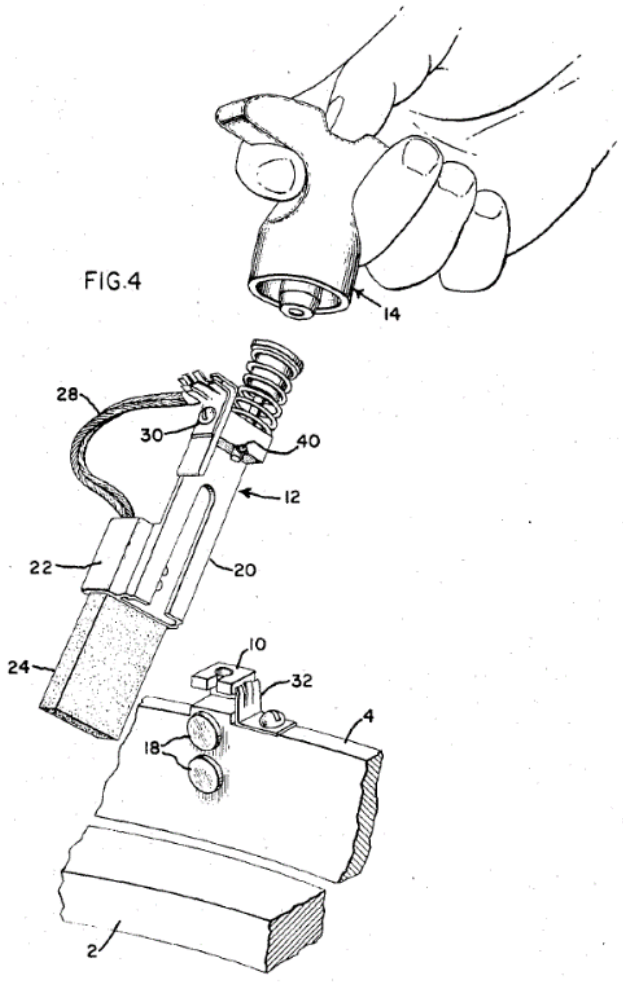

Ex. 1005, Fig. 4. As shown in Figure 4 of Bissett above, "L-shaped member 20" provides shoulders "so as to slide into a securely held position relative to dovetails 18." Ex. 1005, 1:69–72. Bissett's L-shaped member 20 also provides spindle 38 having crosspiece 40, which can be connected such that L-shaped member 20 and backplate 10, attached to brush frame 4, are urged together. *Id*. at 2:16–29. As shown above in Figure 4, Bissett discloses that its spring lead receptacle 32 is mounted to the *side* of backplate 10 on brush frame 4 so as to receive the knife-edge clip 30 mounted on the *side* of the brush holder component 12. We determine that Petitioner failed to prove that the choice of relocating the spring lead receptacle 32 to near the top of clamp bar 42 of the proposed Bissett/Kartman mounting block, as Petitioner proposes and without any further modifications, would be consistent with the operation of Bissett's brush holder component 12. First, in light of Patent Owner's arguments of Bissett's inoperability, we find that Petitioner has failed to explain what role, if any, backplate 10 would have in the modified apparatus. The omission is not insignificant, for Petitioner fails to explain how the relocated spring lead receptacle 32 either would replace backplate 10 or somehow would be integrated with backplate 10. With regard to the former, Petitioner has failed to allege and show that Bissett's brush holder component 12 would be secured, via the crosspiece 40 or with any other mechanism. As for the latter, Petitioner has failed to allege that backplate 10 would be modified in any way to accommodate the seemingly overlapping spring lead receptacle 32. Second, Patent Owner has been persuasive in demonstrating that Petitioner's design choice argument has sufficient improbability such that Petitioner's arguments lack merit. For example, Patent Owner argues persuasively that relocating spring lead receptacle 32 anywhere else behind the Kartman mounting block would result in the spring lead receptacle 32 being "buried" into or below

frame 4 and would interfere with the slide path of Bissett's brush holder component 12. *See* PO Remand Reply 2. In light of Patent Owner's assertions, Petitioner's arguments regarding the obvious relocation of Bissett's spring lead receptacle 32 to Kartman's clamp bar 42 have been shown to require more detail than we have on this record.

"To satisfy its burden of proving obviousness, a petitioner cannot employ mere conclusory statements. The petitioner must instead articulate specific reasoning, based on evidence of record, to support the legal conclusion of obviousness." *In re Magnum Oil Tools Int'l, Ltd.*, No. 2015-1300, 2016 WL 3974202, at *10 (Fed. Cir. July 25, 2016) (citing *KSR*, 550 U.S. at 418). In *Arendi S.A.R.L.*, the Federal Circuit warned that "references to 'common sense'–whether to supply a motivation to combine or a missing limitation–cannot be used as a wholesale substitute for reasoned analysis and evidentiary support, especially when dealing with a limitation missing from the prior art references specified." 2016 WL 4205964 at *5 (*citing In re Zurko*, 258 F.3d 1379, 1383, 1385 (Fed. Cir. 2001) (reversing Board where it adopted examiner's unsupported assertion that claim limitation missing from cited references was "basic knowledge" and it "would have been nothing more than good common sense" to combine the references.)). Similar to the Federal Circuit's requirements with regard to relying on "common sense" in an obviousness analysis, we determine that Petitioner's reliance on a "design choice" in an obviousness analysis requires reasoned analysis and evidentiary support. *See id*. We find Petitioner's argument lacks reasoned analysis and evidentiary support with respect to the relocation of Bissett's spring lead receptacle 32 as the result of a design choice. Specifically, we see no showing from Petitioner where the relocation of spring lead receptacle 32 to Kartman's clamp bar 42 would allow (1) for mounting the block onto frame 4, and (2) for the

knife-edge clip 30 to engage the receptacle or allow brush holder component 12 to slide fully until completely engaged. Accordingly, in light of the arguments and evidence advanced by the parties, we find that the record fails to support Petitioner's contention that relocating spring lead receptacle 32 was a mere design choice.

To be sure, Petitioner offers some arguments regarding the proposed relocation. In this regard, Petitioner argues that there were only two known options for the location of the Bissett spring lead receptacle 32: (1) on the fixed base, or (2) on the mounting block. Pet. Remand Br. 1 (citing Ex. 1005, Fig. 2, 2:13–15; Ex. 1003, Fig. 1, 2:54–59). As stated above, Petitioner fails, however, to offer any explanation as to what further modifications would have been necessary to the Bissett structure if spring lead receptacle 32 were moved from (1) the base to (2) the mounting block. *See* Pet. Remand Br. 1–5; Pet. Remand Reply 1–2. Petitioner merely alleges that a person of ordinary skill in the art would have located the spring on the Bissett/Kartman mounting block given the advantages stated in Ohmstedt of having a spring in that location. Pet. Remand Br. 3 (citing Ex. 1003, 2:54–57). Notwithstanding the disclosure of Ohmstedt, the omissions stated above are significant, such that, even with an apparent reason for the relocation of a spring as taught in Ohmstedt, the Bissett structure would need further modifications that are neither argued nor shown by Petitioner.

Based on the foregoing, we determine that Petitioner fails to establish by a preponderance of the evidence that claim 5 would have been obvious over Bissett, Kartman, and Ohmstedt.

m. Claim 6

Claim 6 recites that "the mounting block includes a portion that is adapted to engage with a complementary portion of the brush holder component when the

brush holder component is mounted on the mounting block so as to prevent relative movement of the brush holder component and the mounting block." Ex. 1001, 18:41–46. Petitioner argues that Bissett in view of Kartman and Ohmstedt teaches claim 6 because the modified Bissett/Kartman mounting block is adapted to engage with a complementary portion 20 of the brush holder component 12 to prevent relative movement of the brush holder component and the mounting block. Pet. 20 (citing Ex. 1005, Figs. 3–4, 1:61–2:1; Ex. 1004, Figs. 2, 3, 4:17–26). More particularly, Petitioner argues the T-shaped Bissett/Kartman mounting block engages the channel of the Bissett brush holder to prevent relative movement of the brush holder and the T-shaped mounting block. *Id*. We determine the proposed Bissett/Kartman mounting block includes a portion to engage a complementary portion of the L-shaped member 20 of the Bissett brush holder component 12 so as to prevent relative movement. *See id*. Based on the foregoing discussion and the record, including the secondary considerations of nonobviousness discussed below, we determine that the record supports Petitioner's contentions that claim 6 would have been obvious in view of Bissett, Kartman, and Ohmstedt and we adopt these contentions as our own.

n. Claims 7, 13, and 17

Claims 7, 13, and 17 prohibit the "mounting block" from extending through a plane defined by a planar surface of the base on which the mounting block is mounted. *See e.g.*, claim 7 ("wherein a surface of the mounting block is adapted for mounting against a base having a substantially planar surface such that no portion of said mounting block extends through a plane defined by said planar surface." Ex. 1001, 18:47–51.). With respect to claim 7, Petitioner argues that the "surface of the modified Bissett/Kartman mounting block is adapted for mounting against a base 4 having a substantially planar surface such that no portion of said

mounting block extends through a plane defined by said planar surface." Pet. 20. Furthermore, Petitioner argues that "the narrower portion of T-shaped Bissett/Kartman mounting block is adapted for mounting against the base 4 just as the Bissett mounting structure 18 is adapted for mounting against base 4." *Id*.

Patent Owner argues that Bissett's bolts 16 extend through the base of frame 4, contrary to the limitation in claims 7, 13, and 17. PO Resp. 48–49. We are not persuaded by Patent Owner's arguments because they fail to take into consideration the structures identified in Petitioner's proposed combination of the Bissett/Kartman mounting block. Petitioner's proposed combination modifies "the mounting structure 18 of Bissett to include the mounting block 42 of Kartman." Pet. 11–12. Reproduced below are excerpts of Figure 4 of Bissett (left) and Figure 3 of Kartman (right).

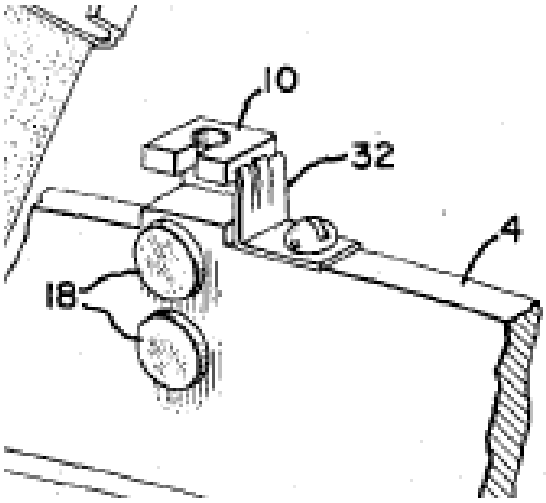

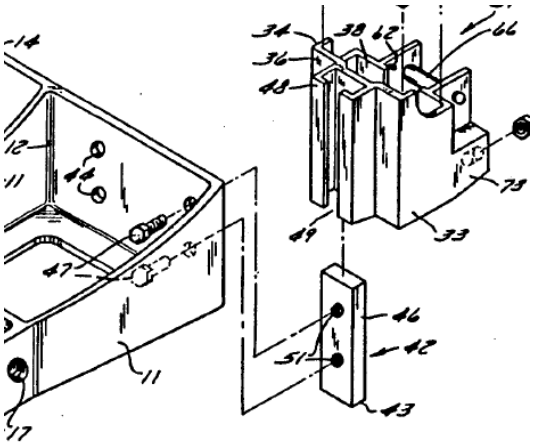

Ex. 1005, Fig. 4; Ex. 1004, Fig. 3. Contrary to Patent Owner's argument, "the structure Petitioner identifies as the mounting block (e.g., the heads of Bissett's dovetail bolts 18, unmodified or modified to the shape of Kartman's clamp bar [42])" is positioned entirely on one side of the base 4 of Bissett. Pet. Reply 12.

Likewise, Kartman's clamp bar 42 sits entirely on one side of the base. *See* Ex. 1004, Fig. 3. Accordingly, Petitioner's proposed Bissett/Kartman mounting block (modifying Bissett's dovetails 18 to include Kartman's clamp bar 42), would provide a mounting block on one side of Bissett's base 4, such that the brush holder component could be removably mounted to this mounting block, as required by the claims. *See* Pet. 11–12. Furthermore, no portion of Petitioner's proposed Bissett/Kartman mounting block extends through a plane defined by the planar surface of the base, as required by claims 7, 13, and 17. *See* Ex. 1005, Fig. 4; Ex. 1004, Fig. 3.

Patent Owners' arguments incorrectly assume that the claim limitation requiring that "no portion of the mounting block extends through a plane" defined by a base having a substantially planar surface prohibits the attachment mechanisms for the mounting block from extending through a plane of the base. Patent Owner's arguments are not commensurate with the scope of the claims, as claims 7, 13, and 17 merely prohibit the "mounting block" from extending through a plane of the base. For example, as shown above in Figure 3, Kartman discloses cap screws 47 that extend through vertically spaced holes 44 in the base, cross beam 14, but the *mounting block, clamp bar 42*, merely abuts the base when the cap screws 47 are tightened. Ex. 1004, Fig. 3, 4:13–23. Just as a picture frame hanging on a wall is not considered to extend through the wall simply because a picture hanger is nailed into the wall, Kartman's mounting block, clamp bar 42, would not be considered to extend through the base simply because the cap screws 47 extend through cross beam 14. *See id*. Based on the foregoing discussion and the record, including the secondary considerations of nonobviousness discussed below, we determine that the record supports Petitioner's contentions that claims 7, 13, and 17 would have been obvious in view of Bissett, Kartman, and Ohmstedt

and we adopt these contentions as our own.

o. Claim 8

Claim 8 recites that the "mounting block includes a portion that is movable relative to the remainder of the mounting block." Ex. 1001, 18:53–54. With respect to claim 8, Petitioner argues that Bissett discloses a crossmember 40 that is movable and operable to engage with the removable brush holder component 22 (at hole 36 of backplate 10) to secure the removable brush holder component 12. Pet. 20–21 (citing Ex. 1005, Fig. 3, 4; 2:16–29). Figure 4 illustrating the crossmember 40 is reproduced below.

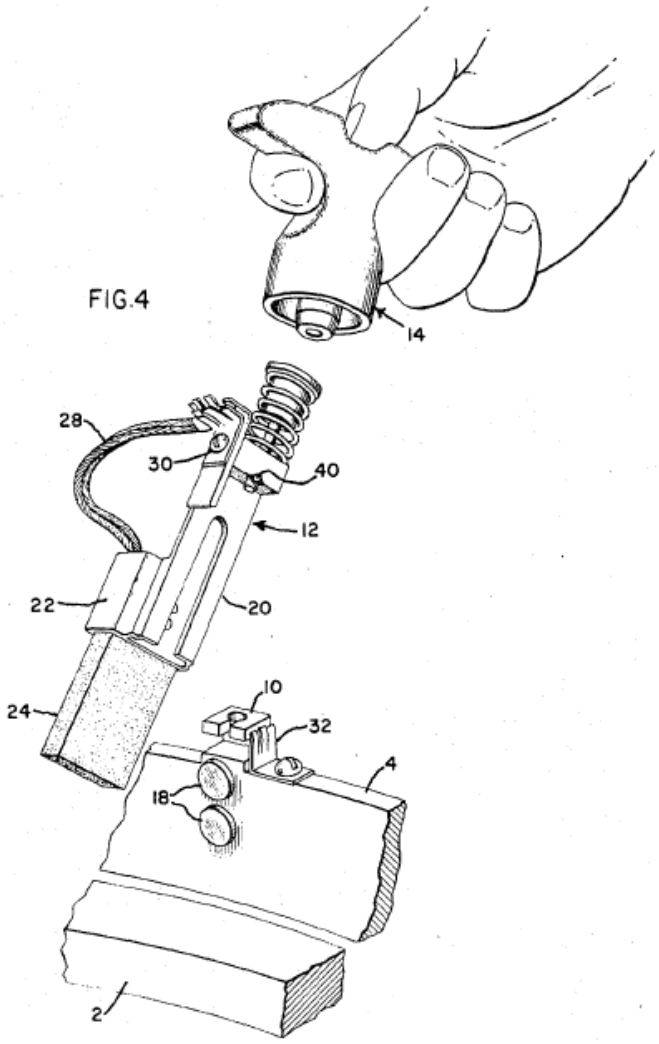

Ex. 1005, Fig. 4. Petitioner argues that "[i]n Bissett, the moveable portion 40 is located on the brush holder component 12, however, one of ordinary skill in the art would understand that the structure could be reversed with the moveable portion 40 located on the mounting block." Pet. 21.

Patent Owner counters that moving Bissett's crosspiece 40 to the mounting block would "create substantial design difficulties." PO Resp. 51. As Petitioner acknowledges, Bissett's crosspiece 40 engages with hole 36 of backplate 10, which is mounted to brush frame 4. Pet. 21 (citing Ex. 1005, Figs. 3, 4, 2:16–29). Therefore, if crosspiece 40 were moved to the proposed Bissett/Kartman mounting block, there would need to be a corresponding structure on the Bissett brush holder component 12 to engage with crosspiece 40. Petitioner fails to provide any argument or evidence as to why it would have been obvious to one of ordinary skill in the art to modify Bissett's brush holder component 12 to include a structure equivalent to hole 36 of backplate 10. In order for Petitioner's proposed modification to be operable, Bissett's brush holder component 12 would need to be modified to include structures similar to hole 36 in backplate 10 to accept and engage a crosspiece 40 on the proposed Bissett/Kartman mounting block at a different location and orientation than the structure disclosed in Bissett. Petitioner fails, however, to cite to any arguments or evidence in the record regarding such modifications, much less how such modification would have been obvious to one of ordinary skill in the art.

Alternatively, with respect to claim 8, Petitioner argues that Bissett includes spring lead receptacle 32 that is moveable by opening to accept knife-edge clip 30. Pet. 21 (citing Ex. 1005, Fig. 4, 2:12–15). As discussed above with respect to claim 5, however, spring lead receptacle 32 is not part of the mounting block disclosed in Bissett. *See* Ex. 1005, Fig. 4; PO Resp. 50–51. Furthermore, as

discussed above with respect to claim 5, Petitioner has failed to show that spring lead receptacle 32, when relocated on the proposed Bissett/Kartman mounting block, would be consistent with the disclosed operation of Bissett's structure, without further modifications to the disclosed structures. Accordingly, we are not persuaded that Bissett's spring lead receptacle 32 teaches the requirements of claim 8.

Based on the foregoing, we determine that Petitioner fails to establish by a preponderance of the evidence that claim 8 would have been obvious over Bissett, Kartman, and Ohmstedt.

p. Claim 9

Claim 9 recites that "the mounting block has a width measured between the first and second outer side surfaces, and the brush holder component has a width measured parallel to the width of the mounting block, the width of the brush holder component being greater than the width of the mounting block." Ex. 1001, 18:57–62. Petitioner argues that the brush holder component 12 has a width measured parallel to the width of the proposed Bissett/Kartman mounting block that is greater than the width of the mounting block. Pet. 21 (citing Ex. 1005, Fig. 4). As shown in Figure 4 of Bissett, the width of the brush holder component must be greater than the width of the mounting block to enable engagement with the mounting block. *See id*. Based on the foregoing discussion and the record, including the secondary considerations of nonobviousness discussed below, we determine that the record supports Petitioner's contentions that claim 9 would have been obvious in view of Bissett, Kartman, and Ohmstedt and we adopt these contentions as our own.

q. Claim 10

Claim 10 recites that "the brush holder component includes a brush box affixed to a beam." Ex. 1001, 18:63–65. Petitioner argues that Bissett brush holder component 12 includes a brush box 22 affixed to a beam 20. Pet. 22 (citing Ex. 1005, Figs. 3–4, 1:61–2:1). As shown in Figures 3 and 4 of Bissett, the brush holder component 12 has a brush box 22 affixed to L-shaped member 20 and Bissett discloses that this brush box 22 provides "a hollow rectangular member open at both ends for accommodation therein of a carbon brush 24." Ex. 1005, 2:3–5. We determine Bissett's brush box 22 teaches a brush box affixed to a beam. *See id*. Based on the foregoing discussion and the record, including the secondary considerations of nonobviousness discussed below, we determine that the record supports Petitioner's contentions that claim 10 would have been obvious in view of Bissett, Kartman, and Ohmstedt and we adopt these contentions as our own.

r. Claim 11

Claim 11 recites that "the beam includes the channel." Ex. 1001, 18:66–67. Petitioner argues that Bissett brush holder component 12 includes a beam 20 (L-shaped member 20) having a channel. Pet. 22 (citing Ex. 1005, Figs. 3–4, 1:61–2:1). As shown in Figures 3 and 4 of Bissett, the L-shaped member 20 has a channel to accommodate the mounting block. Ex. 1005, Figs. 3–4, 1:61–2:1. Based on the foregoing discussion and the record, including the secondary considerations of nonobviousness discussed below, we determine that the record supports Petitioner's contentions that claim 11 would have been obvious in view of Bissett, Kartman, and Ohmstedt and we adopt these contentions as our own.

s. Claims 12, 14–16, and 18–24

Claims 12, 14–16, and 18–24 provide similar limitations to the claims analyzed above and Petitioner's arguments with respect to these claims incorporate

arguments made with respect to the claims above. We have reviewed Petitioner's analysis and supporting evidence for the remaining elements recited in claims 12, 14–16, and 18–24, which were not disputed separately by Patent Owner. Pet. 23–27. Based on the foregoing discussion and the record, including the secondary considerations of nonobviousness discussed below, we determine that the record supports Petitioner's contentions that claims 12, 14–16, and 18–24 would have been obvious in view of Bissett, Kartman, and Ohmstedt and we adopt these contentions as our own.

5. Objective Indicia of Nonobviousness

Factual inquiries for an obviousness determination include secondary considerations based on evaluation and crediting of objective evidence of nonobviousness. *Graham v. John Deere Co.*, 383 U.S. 1, 17 (1966). Notwithstanding what the teachings of the prior art would have suggested to one with ordinary skill in the art at the time of the '018 patent's invention, the totality of the evidence submitted, including objective evidence of nonobviousness, may lead to a conclusion that the claimed invention would not have been obvious to one with ordinary skill in the art. *In re Piasecki*, 745 F.2d 1468, 1471–72 (Fed. Cir. 1984). Secondary considerations may include any of the following: long-felt but unsolved needs, failure of others, unexpected results, commercial success, copying, licensing, and praise. *Graham*, 383 U.S. at 17. "[E]vidence rising out of the so-called 'secondary considerations' must always when present be considered en route to a determination of obviousness." *Stratoflex, Inc. v. Aeroquip Corp.*, 713 F.2d 1530, 1538 (Fed. Cir. 1983). As the Federal Circuit noted, secondary considerations "may often be the most probative and cogent evidence" of nonobviousness. *Id*. Patent Owner argues that numerous objective indicia demonstrate the non-obviousness of its claimed invention. PO Resp. 52.

All types of objective evidence of nonobviousness must be shown to have a nexus. *In re GPAC Inc.*, 57 F.3d at 1580 (nexus generally); *In re Huang*, 100 F.3d 135, 140 (Fed. Cir. 1996) (commercial success); *Wm. Wrigley Jr. Co. v. Cadbury Adams USA LLC*, 683 F.3d 1356, 1364 (Fed. Cir. 2012) (copying); *Rambus Inc. v. Rea*, 731 F.3d 1248, 1256 (Fed. Cir. 2013) (long-felt need); *Muniauction, Inc. v. Thomson Corp.*, 532 F.3d 1318, 1328 (Fed. Cir. 2008) (praise). The stronger the showing of nexus, the greater the weight accorded the objective evidence of nonobviousness. *See Ashland Oil, Inc. v. Delta Resins & Refractories, Inc.*, 776 F.2d 281, 306 (Fed. Cir. 1985), cert. denied, 475 U.S. 1017 (1986).

a. Long Felt Need

Patent Owner argues that nearly 27 years passed from the date that Bissett and Ohmstedt were known and readily available, but there is no evidence anybody combined Ohmstedt's brush catch with Bissett. PO Resp. 52–53. Patent Owner also argued that there is no evidence that anyone combined Kartman's clamping action with Bissett, despite the fact that Kartman's patent issued more than ten years before the '018 patent. *Id*. at 53. Patent Owner further states that the substantial intervening time between the prior art's teaching and the '018 patent "speaks volumes" to the nonobviousness of the claims at issue. *Id*.

Contrary to Patent Owner's arguments, the simple passage of time between the prior art and the reduction to practice of the claimed invention is not alone sufficient objective evidence of nonobviousness. To establish evidence of a long felt but unresolved need, a patent owner must show that there was a persistent problem that was recognized by those of ordinary skill in the art. *See In re Gershon*, 372 F.2d 535, 538 (CCPA 1967); *Apple Inc. v. Samsung Elecs. Co.*, 816 F.3d 788, 804–05 (Fed. Cir. 2016) ("Thus, to demonstrate long felt need, the patentee must point to an 'articulated identified problem and evidence of efforts to

solve that problem' which were, before the invention, unsuccessful.") (citations omitted). The problem must not have been solved previously by another, and the claimed invention must, in fact, satisfy the long-felt need. *See Newell Cos. Inc. v. Kenney Mfg. Co.*, 864 F.2d 757, 768 (Fed. Cir. 1988).

Patent Owner does not offer any evidence that a persistent problem was recognized by those of skill in the brush assembly art or that the problem was satisfied by Patent Owner's claimed invention. Patent Owner's short discussion of this consideration focuses entirely on the amount of time between the availability of the cited prior art and filing of the '018 patent. *See* PO Resp. 52–53 (Patent Owner merely argues that "substantial intervening time . . . 'speaks volumes' to the nonobviousness of the claims"). Patent Owner does not articulate a persistent problem or long felt need. *See* PO Resp. 52–53. With respect to the claimed invention, Patent Owner merely alleges that it introduced its EASYchange holder product into the market in 2002. *See* PO Resp. 53. Patent Owner does not offer sufficient evidence that its EASYchange holder product satisfied a persistent problem in the market.

For the foregoing reasons, the objective evidence proffered by Patent Owner is insufficient to establish a long-felt, but unmet, need.

b. Copying

Patent Owner alleges that Petitioner copied the EASYchange brush holder when it designed the competing brush holder product, the FC-101 holder. PO Resp. 56–57. Specifically, Patent Owner alleges that its EASYchange brush holder was in the public domain in 2002 and "[s]everal years later" the FC-101 holder entered the market around 2005. PO Resp. 56 (citing Ex. 2050 ¶ 24).

In *WBIP, LLC v. Kohler Co.*, the Patent Owner, WBIP, presented evidence that two employees of the accused infringer, Kohler, viewed WBIP's patented

product at a 2004 boat show and that the two Kohler employees asked WBIP questions about the patented feature. No. 2015-1038, 2016 WL 3902668, at *11 (Fed. Cir. July 19, 2016). WBIP also provided evidence that an internal Kohler document was circulated "shortly after this show," requesting funding for Kohler's development of its own version of WBIP patented product. *Id*. The Federal Circuit affirmed the finding that Kohler copied the claimed invention based on the evidence that Kohler's engineers were aware of and had access to the patented product and, shortly thereafter, adopted the same features in developing the Kohler product. *Id*.

Here, unlike *WBIP*, Patent Owner does not offer any evidence illustrating that Petitioner had access or even knowledge of the EASYchange holder prior to designing the FC-101. Patent Owner makes the statement that "Petitioner had access to the EASYchange holder and the specification of the '018 patent when Petitioner was designing the FC-101 holder" (PO Resp. 56–57), but Patent Owner offers no evidentiary support for this assertion. Patent Owner merely alleges that both products include similar components, such as a brush box, brush catch, a beam, and a channel. PO Resp. 58. Petitioner counters that Patent Owner has not shown that Petitioner actually relied upon the EASYchange brush holder or any patent describing the EASYchange brush holder in creating its design. Pet. Reply 14. Furthermore, Petitioner argues that the FC-101 looks different and operates different according to different mechanical principles from EASYchange brush holder. *Id*.

We are not persuaded that Patent Owner has sufficiently established copying by Petitioner in designing the FC-101. As Patent Owner concedes, the development of the FC-101 occurred many years after the EASYchange (see PO Resp. 56) and Patent Owner does not provide evidence that Petitioner had actual

access to or knowledge of the EASYchange product. For the foregoing reasons, the objective evidence proffered by Patent Owner is insufficient to establish copying.

c. Commercial Success

Patent Owner alleges that its EASYchange brush holder has enjoyed commercial success shown by the sales of the product. PO Resp. 59 (citing Exs. 2050 ¶ 18, 2051). In support of its allegation of commercial success, Patent Owner provides its sales figures for the EASYchange brush holder since 2002. Ex. 2050 ¶ 18; Ex. 2051. Patent Owner provides a claim chart (Ex. 2017) comparing the challenged claims of the ’018 patent to the EASYchange brush holder and asserts that its EASYchange brush holder embodies the challenged claims of the ’018 patent. PO Resp. 54 (citing Ex. 2019 ¶ 190–91; Ex. 2017). Petitioner does not offer any argument or evidence that the EASYchange brush holders are not the commercial embodiments of the claimed invention. *See* Pet. Reply 13–15. In the absence of persuasive evidence to the contrary, we presume that the EASYchange brush holder commercial embodiment is the invention disclosed in the challenged claims of the ’018 patent. *See PPC Broadband, Inc. v. Corning Optical Commc’ns RF, LLC*, 815 F.3d 734, 747 (Fed. Cir. 2016) (“When the patentee has presented undisputed evidence that its product is the invention disclosed in the challenged claims, it is error for the Board to find to the contrary without further explanation.”).

Based on the presumption, we determine Patent Owner sufficiently establishes the nexus between the evidence of sales of the EASYchange brush holder proffered by Patent Owner and the challenged claims of the ’018 patent. Even with the presumption, however, Patent Owner must still provide objective evidence that the sales of the EASYchange brush holder amounted to a commercial

success. Although Patent Owner provides evidence of sales figures of the EASYchange brush holder each year from 2002 to 2013 (Ex. 2050 ¶ 18, Ex. 2051), it does not provide sufficient argument or evidence as to how those sales relate to the overall brush holder market. In *Cable Elec. Prods., Inc. v. Genmark, Inc.*, the Federal Circuit determined that the patentee failed to provide evidence of market share and held that "[w]ithout further economic evidence [] it would be improper to infer that the *reported sales represent a substantial share of any definable market*." 770 F.2d 1015, 1026 (Fed. Cir. 1985). Similarly here, we presume the sales of the EASYchange brush holder are attributable to the claimed invention, but Patent Owner fails to sufficiently establish whether those EASYchange brush holder sales *represent a substantial share of a definable market for brush holders*. Accordingly, we determine Patent Owner does not provide sufficient objective evidence of the commercial success of the claimed invention.

d. Industry Praise

Similar to its commercial success arguments, Patent Owner relies upon a claim chart (Ex. 2017) comparing the challenged claims to the EASYchange brush holder and asserts that its EASYchange brush holder embodies the claims of the '018 patent. PO Resp. 54 (citing Ex. 2019 ¶¶ 190–91; Ex. 2017). Petitioner does not offer any argument or evidence that the EASYchange brush holders are not the commercial embodiments of the claimed invention. *See* Pet. Reply 13–15. In the absence of persuasive evidence to the contrary, we presume that any objective evidence of industry praise of the EASYchange brush holder is attributable to the claimed invention of the '018 patent. *See WBIP, LLC v. Kohler Co.*, 2016 WL 3902668 at *6 ("there is a presumption of nexus for objective considerations when the patentee shows that the asserted objective evidence is tied to a specific product and that product 'is the invention disclosed and claimed in the patent.'"). Patent

Owner provides materials that it alleges provide objective evidence of industry praise, including a 2010 article from Combined Cycle Journal (Ex. 2005), a 2008 letter from Plant Engineering (Ex. 2057), 2011 webpage from Combined Cycle Journal Online (Ex. 2058), and testimony from Mr. Cutsforth describing these materials (Ex. 2050 ¶ 20).

In evaluating this objective evidence of industry praise, we note that the materials provided recite only general comments about the EASYchange brush holder product. *See* Ex. 2005, 2057, 2058. For example, the 2010 Combined Cycle Journal article describes Patent Owner's EASYchange brush holder as providing brush replacement that is "*easily and quickly accomplished*" and that the "*[w]ell designed, removable brush holders greatly simplify brush replacement*." PO Resp. 54–55 (citing 2005 at 104) (emphasis omitted). Patent Owner also cites to a 2011 Combined Cycle Journal material as indicating that the EASYchange product won the user nominated 2011 Best Practices Award for plant maintenance. PO Resp. 54 (citing Ex. 2058). We note that the exhibit provided does not mention a 2011 Best Practices Award and, more importantly, only describes the EASYchange product with general statements, such as "*safer brush changes and increases efficiency* by reducing the time required for changing brushes." Ex. 2058. Additionally, the 2008 letter from Plant Engineering does not provide any statements about the EASYchange brush holder or even particularly identify the product. Ex. 2057.

Although the materials provided by Patent Owner provide general statements regarding the EASYchange brush holder, such as "[w]ell designed," these statements do not acclaim or reasonably refer to any of the claimed features of the claimed invention embodied by Patent Owner's EASYchange brush holder product. In fact, the statements of general praise provided in the materials could

easily apply to the brush holders disclosed in the asserted prior art of Bissett, Kartman, and Ohmstedt, which were also described as quick and safe. *See e.g.*, Ex. 1005, 1:9–21 (Bissett describes that it is the "object of the present invention to provide a dynamoelectric machine brush holder which is *simply and safely removable* during operation of the machine.") (emphasis added); Ex. 1004, 1:64–68 (Kartman's describes its brush holders as providing "*quick disconnect* mount and disconnect terminal . . . to facilitate *safe and fast service* thereof") (emphasis added); Ex. 1003 (Ohmstedt's describes its brush holders as providing "a relatively simple brush mounting device having an improved brush retention means"). As the Federal Circuit held in *Transocean Offshore Deepwater v. Maersk Drilling*, the evidence proffered as to industry praise must have some relation or link to a claimed feature of the commercial embodiment of the claimed invention. 699 F.3d 1340, 1351-52 (Fed. Cir. 2012) (finding objective evidence of industry praise established that "industry members doubted whether *the claimed dual-activity feature* would increase drilling efficiency" and this benefit of the claimed dual-activity apparatus garnered praise in the drilling industry (emphasis added)). Here, we determine that the alleged statements of praise provided by Patent Owner fail to sufficiently establish industry praise because the evidence and statements in the proffered materials do not acclaim or reasonably refer to any of the claimed features of the EASYchange brush holder and, in fact, are attributes that could have described the prior art brush holders.

We also note that the 2010 Combined Cycle Journal article provided by Patent Owner as evidence of industry praise additionally discusses the deficiencies of the EASYchange brush holder. Specifically, the Combined Cycle Journal article states, with respect to the EASYchange brush holder, that "brush replacement is easily and quickly accomplished, although the pig-tail location

requires use of insulated gloves." Ex. 2005, 104. The article also identifies that Patent Owner's EASYchange brush holder "requires change-out of the buss rings to implement" yet the competitor's product "by contrast, is a direct drop-in replacement to the existing holders, and does not requir[e] drilling of holes or change-out of the buss rings." *Id*. These statements further diminish the probative value of the alleged objective evidence of industry praise.

Patent Owner also offers evidence regarding alleged praise of the Fulmer FC-101 brush holder. PO Resp. 55 (citing Ex. 2060). Patent Owner does not, however, offer any objective evidence comparing the challenged claims of the '018 patent to the FC-101 brush holder.[9] Therefore, we have no basis to presume any alleged praise of FC-101 is attributable to the challenged claims of the '018 patent.

e. Evaluation of the Objective Indicia of Nonobviousness

We weigh any objective evidence of non-obviousness en route to ruling on Petitioner's obviousness challenge. We do so mindful that secondary considerations can be the most probative evidence of non-obviousness in the record, enabling a tribunal to avert the trap of hindsight. *Crocs, Inc. v. Int'l Trade Comm'n*, 598 F.3d 1294, 1310 (Fed. Cir. 2010).

Petitioner's challenge rests on an assertion that a person of ordinary skill in the art would have recognized that the brush holder assemblies recited in the challenged claims would have been obvious in view of Bissett, Kartman, and Ohmstedt. We weigh this proposed challenge against the totality of the circumstances. In view of the scope and content of Bissett, Kartman, and

[9] Patent Owner generally compares the FC-101 to the EASYchange product for purposes of copying (PO Reps. 57–58), but does not compare the FC-101 to the challenged claims of the '018 patent.

Ohmstedt, the level of skill in the art exemplified by these references, and the minimal differences between the claimed subject matter of the ’018 patent and this prior art, we determine the record evidence supporting a conclusion of obviousness outweighs any minimal objective indicia of nonobviousness. *See Graham*, 383 U.S. at 17–18.

III. CONCLUSION

Based on our review of the record, we conclude that Petitioner has demonstrated, by a preponderance of the evidence, that 1–4, 6–7, and 9–24 of the ’018 patent would have been obvious over Bissett, Kartman, and Ohmstedt. Additionally, we conclude the Petitioner has failed to establish that claims 5 and 8 of the ’018 patent are unpatentable.

IV. ORDER

Accordingly, it is hereby:

ORDERED that Petitioner has shown by a preponderance of the evidence that claims 1–4, 6–7, and 9–24 of the ’018 patent are unpatentable;

FURTHER ORDERED that Petitioner has failed to establish that claims 5 and 8 of the ’018 patent are unpatentable; and

FURTHER ORDERED that the parties to the proceeding seeking judicial review of this Final Written Decision must comply with the notice and service requirements of 37 C.F.R. § 90.2.

PETITIONER:

Jason A. Engel (Lead Counsel)
Alan L. Barry (Backup Counsel)
K&L GATES LLP
70 W. Madison Street, Suite 3100
Chicago, IL 60602
Jason.engel@klgates.com
alan.barry@klgates.com

PATENT OWNER:

W. Karl Renner (Lead Counsel)
Dorothy P. Whelan (Backup Counsel)
FISH & RICHARDSON P.C.
60 South Sixth Street
Minneapolis, MN 55402
axf@fr.com
Whelan@fr.com
PTABInbound@fr.com