Trials@uspto.gov
571-272-7822

Paper 72
Filed: January 27, 2015

UNITED STATES PATENT AND TRADEMARK OFFICE

BEFORE THE PATENT TRIAL AND APPEAL BOARD

CARDIOCOM, LLC,
Petitioner,

v.

ROBERT BOSCH HEALTHCARE SYSTEMS, INC.,
Patent Owner.

Case IPR2013-00468[1]
Patent 7,516,192 B2

Before JUSTIN T. ARBES, BRYAN F. MOORE, and TRENTON A. WARD, *Administrative Patent Judges.*

MOORE, *Administrative Patent Judge*.

FINAL WRITTEN DECISION
35 U.S.C. § 318(a) and 37 C.F.R. § 42.73

---

[1] Case IPR2013-00469 has been joined with this proceeding.

I. INTRODUCTION

A. Background

Cardiocom, LLC ("Petitioner")[2] filed a Petition ("Pet.") to institute an *inter partes* review of claims 1–19 of U.S. Patent No. 7,516,192 B2 ("the '192 patent"). Paper 1. On January 16, 2014, the Board instituted an *inter partes* review of claims 1–19 (Paper 22) ("'468 Dec. on Inst."). On the same day, the Board instituted an *inter partes* review of claims 20–37 based on a Petition (IPR2013-00469, Paper 1) ("'469 Pet.") filed in IPR2013-00469. Paper 21, IPR2013-00469 ("'469 Dec. on Inst."). IPR2013-00469 was joined with IPR2013-00468. '469 Dec. on Inst. 15. All references in this decision are to IPR2013-00468 unless otherwise indicated.

Subsequent to institution, Robert Bosch Healthcare Systems, Inc. ("Patent Owner") filed a Patent Owner Response (Paper 39) ("PO Resp."),[3] and Petitioner filed a Reply (Paper 52) ("Pet. Reply").[4] Petitioner filed a Motion to Exclude Evidence (Paper 57), Patent Owner filed an Opposition to Petitioner's Motion to Exclude (Paper 61), and Petitioner filed a Reply (Paper 65). Patent Owner filed a Motion to Exclude Evidence (Paper 59), Petitioner filed an Opposition to Patent Owner's Motion to Exclude (Paper 62), and Patent Owner filed a Reply (Paper 64). Patent Owner also filed a Motion for Observation (Paper 58) ("Obs.") on certain cross-examination testimony of Petitioner's declarant, Dr. Robert Stone, and

---

[2] Petitioner indicates that Medtronic, Inc. also is a real party-in-interest in this proceeding. Paper 21; Paper 20 (IPR2013-00469).

[3] We cite to the Corrected Patent Owner's Response, filed April 25, 2014, Paper 39.

[4] We cite to the Corrected Petitioner's Reply, filed July 15, 2014, Paper 52.

Petitioner filed a Response (Paper 63) ("Obs. Resp."). As scheduled, an oral hearing was held on September 9, 2014, and a transcript of that hearing is part of the record. Paper 71 ("Tr.").

B. The '192 Patent (Ex. 1001)

The '192 patent, titled "Networked System for Interactive Communication and Remote Monitoring of Individuals," issued on April 7, 2009. The '192 patent relates to "a networked system for remotely monitoring individuals and for communicating information to the individuals through the use of script programs." Ex. 1001, 1:39–43.

The '192 patent describes the need for remote monitoring of patients in out-patient or home healthcare programs. *Id.* at 1:45–51, 2:35–40. According to the patent, the use of personal computers, medical monitoring devices, and interactive telephone or video response systems for remote monitoring in the prior art had proved inadequate because of their expense, limited multimedia capability, or the complexity of managing non-compliant patients. *Id.* at 1:65–2:32.

One embodiment of the '192 patent, shown in Figure 1, reproduced below, is networked system 16 with server 18 connected to the Internet (communication network 24), where server 18 sends script programs to each remotely programmable apparatus 26. *Id.* at 4:18–35.

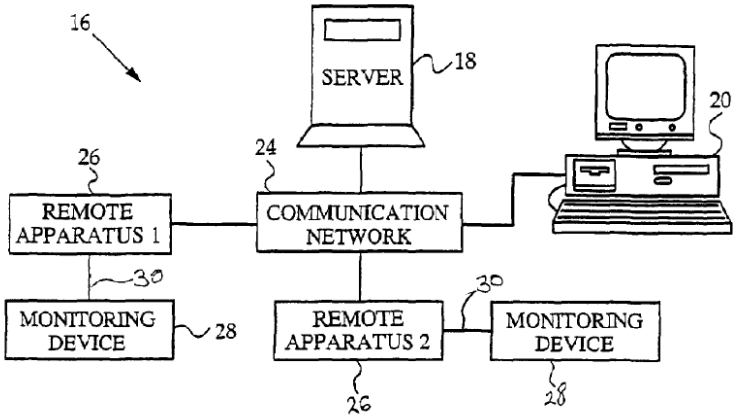

FIG. 1

Figure 1 depicts a block diagram of the networked system of the invention.

According to Figure 1, system 16 may include any number of remotely programmable apparatuses 26 (in Figure 1, two are shown) for monitoring any number of patients. *Id.* at 4:42–44. In one preferred embodiment, each patient is provided with monitoring device 28 (such as a blood glucose meter), which produces measurements of a physiological condition of the patient (such as blood glucose concentrations in the patient) and transmits those measurements to the patient's remote apparatus 26 via standard cable 30. *Id.* at 4:45–61. In operation, remotely programmable apparatus 26 executes a script program received from server 18. *Id.* at 5:7–9. That script program includes "queries, reminder messages, information statements, useful quotations, or other information of benefit to the patient." *Id.* at 5:9–11.

C. Illustrative Claim

Claims 1, 20, and 37 are independent claims. Claim 1 illustrates the claimed subject matter and is reproduced below:

> 1. A monitoring system for communicating with at least one individual, the monitoring system comprising:

a computer configured to communicate with at least one remotely situated apparatus;

a user interface in communication with the computer for entering, authoring, selecting, or any combination thereof, at least one of (i) one or more messages to be presented to the individual, (ii) one or more queries to be answered by the individual, (iii) one or more response choices corresponding to the one or more queries or (iv) any combination thereof;

a data merge program configured to generate a customized script program by customizing a generic script program, wherein the customized script program is to be executed by the remotely situated apparatus and includes (i) a display command to present to the individual at least one of the one or more messages, the one or more queries, the one or more response choices corresponding to the one or more queries or any combination thereof and (ii) an input command to receive responses when the script program includes one or more queries to be presented; and

one or more databases accessible by the data merge program for storing the generic script program and any responses received from the remotely situated apparatus.

D. Cited Prior Art

The pending grounds of unpatentability in this *inter partes* review are based on the following prior art:

Wright Jr.,	US 5,704,029	Dec. 30, 1997 (filed May 23, 1994)	(Ex. 1002)
Goodman,	US 5,827,180	Oct. 27, 1998 (filed Nov. 26, 1997)	(Ex. 1003)
Wahlquist,	US 5,367,667	Nov. 22, 1994	(Ex. 1004)

E. Instituted Grounds of Unpatentability

This *inter partes* review involves the following asserted grounds of unpatentability:

References	**Basis**	**Claims Challenged**
Wright Jr.	§ 103	1–3, 6, 7, 11, 12, 17–19, 20-23, 29, 30, and 35-36
Wright Jr. and Goodman	§ 103	1–37
Goodman and Wahlquist	§ 103	20–37

F. Claim Interpretation

The parties agree with the interpretation of various claim terms of the ’192 patent as described in the Decision on Institution. Patent Owner explains that Petitioner “filed a new petition seeking *inter partes* review of related U.S. Patent No. 7,587,469” in which Petitioner “advances a very different construction” for the term “script program.” PO Resp. 5–6. However, Petitioner does not advance a different construction for the term “script program” in this proceeding.

We adopt our previous analysis for the non-disputed claim terms, and interpret these terms as follows:

Term	**Interpretation**
"script program"	a program that contains a set of instructions that is capable of being executed and interpreted
"data merge program"	a program that combines two or more sets of data into one
"pointer"	an identifier that indicates the location of an item
"script assignment unit"	a program that associates a script program with an individual

See '468 Dec. on Inst. 5–9.

II. ANALYSIS

For at least the following reasons, we conclude that Petitioner has demonstrated by a preponderance of the evidence that claims 1, 6, 7, 17, 18, 20, 21, 22, and 36 are unpatentable over Wright Jr., and that claims 1–37 are unpatentable over Wright Jr. and Goodman, under 35 U.S.C. § 103(a). We also conclude that Petitioner has not demonstrated by a preponderance of the evidence that claims 20–37 are unpatentable over Goodman and Wahlquist, under 35 U.S.C. § 103(a).

A. Overview of Wright Jr. (Ex. 1002)

Wright Jr. discloses a system for computerized form completion and processing. Ex. 1002, Abstract. In one embodiment, an electronic form is sent from a personal computer (PC) to a device, such as a personal digital assistant (PDA). *Id.* at 3:28–39. The PDA runs a forms engine that presents questions to a

user and displays messages based on the response to a particular question. *Id.* at 3:40–51. The forms engine executes a script that, among other things, advances to the next question. *Id.*

B. Overview of Goodman (Ex. 1003)

Goodman discloses a system for monitoring the health of a patient in which a host computer is in communication with a health care provider's computer and a patient's computer. Ex. 1003, 1:11–13, 2:45–49. In one example, the host computer receives a treatment plan for a patient from the health care provider and generates an algorithm based on the treatment plan. *Id.* at 2:54–57. The algorithm is programmed into a message device, which is in the possession of the patient. *Id.* at 2:49–50, 57–58. The message device prompts the patient to measure and enter physiological data as dictated by the treatment plan. *Id.* at 2:59–61.

C. Overview of Wahlquist (Ex. 1004)

Wahlquist discloses a system for performing remotely, computer diagnostic tests on personal computers. Ex. 1004, 1:7–10. A computer user calls a customer service help desk to resolve a computer issue. *Id.* at 2:8–10, 17. A representative at the customer service help desk creates a computerized case file that includes a unique case identification number, user identification, and user's computer identification information. *Id.* at 4:41–50. The representative also selects diagnostic tests based on the user's request, the selection used to build a script file. *Id.* at 2:17–18, 22–23. The case file and the script file are submitted by the representative to a database manager computer and downloaded to the user's computer. *Id.* at 5:37–39, 63–66. The script file then is executed on the user's computer by a diagnostic program on the user's computer. *Id.* at 2:39–40, 42–43. The script file instructs the user's computer to execute desired test files and

specifies the creation of various log files to record the results of the tests. *Id.* at 2:45–47.

D. Level of Ordinary Skill

Petitioner asserts that a person of ordinary skill in the art would have had the following education and experience: Bachelor's degree in Electrical Engineering or Computer Science, or its equivalent, at least 2 years of experience with the design and programming of patient monitoring systems, and at least 1 year of experience with the design or programming of networked systems. Ex. 1008 ¶ 23. Patent Owner's declarant, Dr. Yadin David, disagrees with the above assertion, asserting instead that a person of ordinary skill in the art would not have had the 1 year of experience with the design and programming of networked systems. Ex. 2007 ¶ 23. The disagreement appears to be immaterial to the arguments presented by Patent Owner, however, because Dr. David declares that this additional experience would not affect his opinions. *Id.* Accordingly, we need not determine which of the alleged education and experience proffered by the parties is correct.

We determine the obviousness issues guided by the evidence of the level of ordinary skill in the art presented by the references themselves. *See Okajima v. Bourdeau*, 261 F.3d 1350, 1355 (Fed. Cir. 2001). From the Goodman reference, which Patent Owner does not contest is in the field of endeavor of the invention in question, we understand that the level of ordinary skill in the art, at a minimum, pertains to the configuration of communications systems, such as electronic or wireless systems and personal computer systems for communicating with a central monitoring system, which is computer-implemented technology. *See* Ex. 1003, 3:50–59; *see also id.* at 6:1–25 (describing the features of the computer-implemented technology at issue in Goodman). With this level of ordinary skill in

mind, we now turn to the analysis of the differences between the asserted prior art references and the subject matter recited in the claims-at-issue.

E. Obviousness over Wright Jr.

Petitioner argues in its Petitions that claims 1–3, 6, 7, 11, 12, 17–19, 20–23, 29, 30, 35, and 36 are unpatentable over Wright Jr. under 35 U.S.C. § 103(a), relying on the declaration of Dr. Stone (Ex. 1008) in support. Pet. 5; ’469 Pet. 2. We have reviewed each of the ’468 and ’469 Petitions, the Patent Owner Response, and Petitioner’s Reply, as well as the evidence discussed in each of those papers, and are persuaded, by a preponderance of the evidence, that claims 1, 6, 7, 17, 18, 20–22, and 36 would have been obvious based on Wright Jr. On the other hand, based on that review, we are not persuaded, by a preponderance of the evidence, that claims 2, 3, 11, 12, 19, 23, 29, 30, and 35 would have been obvious based on Wright Jr.

As an initial matter, Patent Owner argues that Dr. Stone’s obviousness analysis is improper because he “used the claims of [the ’192 patent] as a template to try and fit combinations of references into the claims” and “used the teachings of [the ’192 patent] specification[] to identify the goals and motivations for combining the prior art.” PO Resp. 19–22 (citing Ex. 2009 at 412:8–12). According to Patent Owner, Dr. Stone’s analysis is based on improper hindsight reasoning. *Id.* “Any judgment on obviousness is in a sense necessarily a reconstruction based on hindsight reasoning, but so long as it takes into account only knowledge which was within the level of ordinary skill in the art at the time the claimed invention was made and does not include knowledge gleaned only from applicant’s disclosure, such a reconstruction is proper.” *In re McLaughlin,* 443 F.2d 1392, 1395 (CCPA 1971). Patent Owner does not show sufficiently that Dr. Stone’s analysis relies on knowledge that was beyond the level of ordinary

skill in the art at the time of the ’192 patent. We do not see, and Patent Owner does not assert or demonstrate persuasively, how the disclosures relied upon by Dr. Stone (which were not gleaned from the ’192 patent Specification) would have been beyond the level of ordinary skill in the art.

1. A Person of Ordinary Skill in the Art Would Have Had Reason to Modify the Teachings of Wright Jr.

Petitioner asserts that Wright Jr., combined with the knowledge of one skilled in the art at the time of the invention, teaches or suggests the limitations of claims 1–3, 6, 7, 11, 12, 17–19, 20–23, 29, 30, 35, and 36. Patent Owner argues that there was no motivation to modify Wright Jr. PO Resp. 32. Patent Owner asserts that Petitioner’s expert testified that Wright Jr. was “complete for its purposes, meets the goals identified in the patent, and discloses nothing that would instruct or tell a person of ordinary skill in the art to combine Wright [Jr.] with something else.” *Id.* (citing Ex. 2009, 467:16–18, 468:5–17, 469:1–17)

The Federal Circuit has noted that obviousness does not require that every element be present in the prior art. *See Tegal Corp. v. Tokyo Electron Am., Inc.*, 257 F.3d 1331, 1349 (Fed. Cir. 2001) (acknowledging that the claimed invention could be obvious even if prior art did not teach one of its elements). Thus, even a single prior art reference may render an invention obvious. In such cases, the single reference may fail to teach expressly one or more claim limitations. *E.g., B.F. Goodrich Co. v. Aircraft Braking Sys. Corp.*, 72 F.3d 1577, 1582 (Fed. Cir. 1996) (holding that the difference between the claimed invention and the sole reference would have been obvious); *In re O‘Farrell*, 853 F.2d 894, 902 (Fed. Cir. 1988) (“[A]ppellants’ claimed invention would have been obvious in light of the Polisky reference alone . . . .”).

Nonetheless, where there is an attempt to show obviousness over a single reference, there also must be a showing of a suggestion or motivation to modify the teachings of that reference to achieve the claimed invention. *Sibia Neurosciences, Inc. v. Cadus Pharm. Corp.*, 225 F.3d 1349, 1356 (Fed. Cir. 2000). Determining obviousness with respect to whether a single piece of prior art could be modified to produce the claimed invention invokes an inquiry into whether a person having ordinary skill in the art would have had a reason to so modify the prior art reference. *See Comaper Corp. v. Antec, Inc.*, 596 F.3d 1343, 1351-52 (Fed. Cir. 2010). An obviousness challenge relying on such a modification to bridge the difference between the prior art and the claimed invention must be supported by articulated reasoning with rational underpinning to explain why the person of ordinary skill in the art would make the modification. *See In re Kahn*, 441 F.3d 977, 988 (Fed. Cir. 2006) (*Kahn*). The Supreme Court has admonished courts that this analysis should be made explicit. *KSR Int'l Co. v. Teleflex Inc.*, 550 U.S. 398, 418 (2007) (citing *Kahn*, 441 F.3d at 988).

For example, Petitioner relies on knowledge of one of ordinary skill to meet the "one or more databases" limitation. Petitioner explains that user responses are stored on the personal computer in a tab-delimited format for use with a database. Pet. 37–38 (citing Ex. 1002, 3:28–40, 5:7–15, 14:1–10). Wright Jr. also teaches that a form can be selected from a list of existing forms. *Id.* Patent Owner's declarant Dr. David acknowledged one of ordinary skill would be aware of the ability to store a list of forms in a database. Ex. 1041, 557:14–19 (agreeing that "one of ordinary skill would understand that one way to store such a list of forms would be to store them in a computer database that's accessible on the computer"). Given that the use of databases was well within the skill of one of ordinary skill, and given that the form data in Wright Jr. is stored in tab-delimited format,

Petitioner has shown, by a preponderance of the evidence, supported by articulated reasoning with rational underpinning, that a person of ordinary skill in the art would have made the modification to store Wright Jr.'s forms in a database.

2. Petitioner Establishes By a Preponderance of the Evidence That Wright Jr. Teaches Every Limitation of Claims 1, 20, and 21

As detailed below, Petitioner argues that Wright Jr. teaches or suggests every limitation of claim 1.

a. "a computer" (Wright Jr.'s personal computer (PC)) (Pet. 34 (citing Ex. 1002, 3:28–40));

b. "remotely situated apparatus" (Wright Jr.'s personal digital assistant) (*id.* (citing Ex. 1002, 6:33–45, 62–67, Fig. 1));

c. "user interface" (Wright Jr.'s forms creation program) (*id.* (citing Ex. 1002, 6:33–39, 7:47–62)) "for entering, authoring, selecting, or any combination thereof, at least one of":

   i. "one or more messages to be presented to the individual" (Wright Jr.'s forms creation program allows entry or selection of messages) (*id.* at 34–35 (citing Ex. 1002, 10:46–50, 11:48–12:10));

   ii. "one or more queries to be answered by the individual" (Wright Jr.'s forms creation program allows entry of text for questions and answer choices) (*id.* at 34–35 (citing Ex. 1002, 10:46–11:10, 11:48–12:10, 12:63–13:12)); and

   iii. "one or more response choices corresponding to the one or more queries" (Wright Jr.'s forms creation program allows entry of text for questions and corresponding answer choices) (*id.* (citing Ex. 1002, 10:46–11:10, 11:48–12:10, 12:63–13:12));

d. "data merge program" (Wright Jr.'s field editor) (*id.* at 35 (citing Ex. 1002, 6:33–40, 9:51–60)) configured to generate a customized *script program* by customizing a generic script program (Wright Jr.'s forms) (*id.* (citing Ex. 1002, 8:32–38, 9:51–60, 27:56–62));

e. "customized script program" that is executed on the remotely situated apparatus (*id.* (citing Ex. 1002, 8:32–38, 9:51–60, 27: 56–62)) and includes:

   i. "a display command to present to the individual at least one of the one or more messages, the one or more queries, the one or more response choices corresponding to the one or more queries or any combination thereof" (Wright Jr.'s PDA includes a processor, a graphics display, and a memory, and allows display commands for presenting messages, queries, or response choices) (*id.* at 37 (citing Ex. 1002, 4:49–61, 7:6–25)); and

   ii. "an input command to receive responses when the script program includes one or more queries to be presented" (Wright Jr.'s PDA includes a processor, a graphics display, an input device mechanism and a memory and allows input commands for accepting responses selected by a user) (*id.* at 37 (citing Ex. 1002, 4:49–61, 7:6–25)).

Patent Owner makes four arguments with respect to claim 1. First, Patent Owner argues that Wright Jr. does not teach "a script program" because Wright Jr. teaches providing prompts and answers in structured data. PO Resp. 8. Patent Owner argues that "structured data provide[] information that the forms engine is pre-programmed to handle in a particular manner," and are not instructions capable

of being executed and interpreted as required by the Board's claim construction. *Id.* at 8–9. We are not persuaded by this argument. We find that the electronic form as a whole, with its ability to display messages, is a script program. Pet. Reply 7-8. Patent Owner attempts to separate the "script" portion of the form from the "non-script" portion of the form. We decline to do so.

Second, Patent Owner argues Wright Jr. does not teach a "generic script program," as recited in claim 1. Wright Jr. allows a user to access a selection of original forms to choose one and edit its fields or add fields via the field editor to create an edited derivative form. Pet. 35; Ex. 1002, 8:32–38. Petitioner argues that "the previous form has at least some form information that is generic, or generally applicable to the derivative form." Pet. 35. Petitioner asserts that one of ordinary skill would interpret "generic" as indicating that it is not specifically addressed to a particular individual. Pet. Reply 9 (citing Ex. 1041, 540:9–24, 552:24–553:10; Ex. 1001, 13:10–11, 13:41–43). Petitioner asserts that because the script program in Wright Jr. is not specifically addressed to an individual, it is a generic script program. *Id*. (citing Ex. 1008 ¶¶ 91-95, 113). We are persuaded that, in Wright Jr., the fact that the original form is available with a group of other forms and is not limited to a specific individual suggests it is generic.

Patent Owner argues that this is insufficient because in the '192 patent "a 'generic script program' is a script program that is not usable in itself" and "the customized script program described in the '192 patent will contain all of the generally applicable information from the generic script program." PO Resp. 40. Patent Owner's argument is not commensurate with the scope of the claims. There is no recitation in the claims that the generic script program must not itself be usable or that the customized script program must contain "all of the generally

applicable information" from the generic script program. We decline to import these embodiments from the specification into the claims. We must be careful not to read embodiments appearing in the written description into the claim if the claim language is broader than the embodiment. *In re Van Geuns*, 988 F.2d 1181, 1184 (Fed. Cir. 1993). We are persuaded that Petitioner has demonstrated sufficiently that Wright Jr. discloses a "generic script program."

Third, Patent Owner argues Wright Jr. does not teach an "input command," as recited in claim 1. Patent Owner argues that "the cited portions of Wright [Jr. (Ex. 1002, 4:49–61, 7:6–25)] actually teach that the forms engine executes a script after the user answers each question." PO Resp. 42. However, as noted above, we construe a "script program" to be a program that contains a set of instructions that is capable of being executed and interpreted. Wright Jr. teaches that a forms designer can create an electronic form that displays queries and provides user input responses. *See* Pet. 37. Patent Owner argues that the "forms engine has a pre-programmed flow that includes a decision state for determining whether the user has made changes to the answer box portion of the display." PO Resp. 43 (citing Ex. 1002, 16:40–45, Fig. 3). Patent Owner thus argues that the "script" portion of the executable form is the only portion of the form that can be considered a "script program." We find that the entire executable form meets the script program limitation. Additionally, Petitioner correctly asserts that Wright Jr. discloses an input command as part of its grammar rules. Pet. Reply 10 (citing Ex. 1002, 24:53–25:5, 4:49–61, 7:6–25) Petitioner has demonstrated sufficiently that Wright Jr. teaches an executable form capable of executing "script" functions and that the executable form may be considered a "script program" that includes an "input command."

Fourth, Patent Owner argues Wright Jr. does not teach "one or more databases accessible by the data merge program for storing the generic script program and any responses received from the remotely situated apparatus," as recited in claim 1. Petitioner explains that user responses disclosed in Wright Jr. are stored on the personal computer in a tab-delimited format for use with a database. Pet. 37-38 (citing Ex. 1002, 3:28–40, 5:7–15, 14:1–10).

Wright Jr. also teaches that a form can be selected from a list of existing forms. *Id.* Patent Owner's declarant Dr. David acknowledged one of ordinary skill would have been aware of the ability to store a list of forms in a database. Ex. 1041, 557:14–19 (agreeing that "one of ordinary skill would understand that one way to store such a list of forms would be to store them in a computer database that's accessible on the computer"); *see also id.* at 559:10–23, 560:2–18. As noted above in Section II.E.1, Petitioner has shown, by a preponderance of the evidence, supported by articulated reasoning with rational underpinning, why a person of ordinary skill in the art would have made the modification to store Wright Jr.'s forms in a database.

Claim 20 is a method claim containing similar limitations to claim 1. Petitioner explains how Wright Jr. meets the limitations of claim 20. '469 Pet. 32–36. We are persuaded by these explanations for the same reasons stated above with regard to claim 1. For example, claim 20 recites "generating a customized script program in the computer." Patent Owner argues that Wright Jr. does not disclose generating a customized script program "in the computer," as required by claim 20. PO Resp. 59. Patent Owner states that "this limitation requires that the customization of the generic script program is done by a computer." *Id.* Claim 20 (emphasis added) recites "generating a customized script program *in* the computer" rather than generating a customized script program *by* the computer. Thus, we find

it is sufficient that Wright Jr. teaches that a user generates a customized script program using the computer and the customized script program is stored in the computer. Petitioner has demonstrated sufficiently that Wright Jr. teaches generating a customized script program in the computer. ’469 Pet. 32; Pet. Reply 15; Ex. 1022 ¶ 171.

Claim 21 recites “wherein the step of generating the generic script program comprises entering, authoring, selecting, or any combination thereof, at least one of (i) the one or more messages to be presented to the individual, (ii) the one or more queries to be answered by the individual, (iii) the one or more response choices corresponding to the one or more queries or (iv) any combination thereof,” which is essentially the same as the “user interface” limitation of claim 1. Petitioner explains how Wright Jr. meets the limitations of claim 21. ’469 Pet. 36. We are persuaded by these explanations for the same reasons stated above with regard to claim 1. Therefore, Petitioner has shown, by a preponderance of the evidence, that claims 1, 20, and 21 are unpatentable over Wright Jr.

3. Wright Jr. Does Not Teach Every Limitation of Claims 2, 3, and 23

Claim 2 recites “a script assignment unit configured to . . . assign[] to each of the plurality of individuals at least one of the plurality of customized script programs.” Claim 23 requires “assigning to each of the plurality of individuals at least one of the one or more customized script programs.” Patent Owner argues that this requires “assigning different customized script programs to different individuals.” PO Resp. 47. This claim language does not require that every individual is assigned his own, customized script program. Rather, the claims only require that the assigned script program be customized. Thus, we find that Wright Jr.’s personality profile embodiment, where a group of individuals complete a

customized personality profile (Ex. 1002, 28:40–44), would be understood to assign at least one customized script program to that group. Pet. 19.

Nonetheless, claim 2 further recites "for each of the plurality of individuals, a respective pointer to the at least one customized script program assigned to the individual." Petitioner argues that Wright Jr. also teaches or suggests a database configured for storing a list of the individuals and a pointer to a script program assigned to an individual, recited in claim 2 and claim 23, in its discussion of a personality profile. Pet. 20, 41–42; '469 Pet. 19-20, 39–40. Petitioner asserts that, after an individual has completed the personality profile questionnaire, one of ordinary skill would understand that the system would store in a database information associating the individual and his or her results. Pet. 41; Ex. 1008 ¶¶ 108-110, 144–145. Patent Owner correctly notes that Wright Jr. is not directed to a system that assigns different script programs to different individuals. PO Resp. 47–48 (citing Ex. 2007 ¶ 132; Ex. 2009, 463:4–15). Thus, although Petitioner is correct that *results*, an individual's answers, from a particular form may be tracked by individual, there is no suggestion in Wright Jr. that the form itself, i.e., the customized script program, is associated with a particular individual such that a pointer to the first individual's specific script program is unnecessary.

Petitioner argues that the tab-delimited data format in Wright Jr. includes a pointer. Pet. Reply 11–12 (citing Ex. 2009, 567:14–20). Nonetheless, the tab-delimited data is related to the results or answers to the form, not the form itself. *Id.* Petitioner also asserts Wright Jr.'s system employs file identification, however, Petitioner does not show how this identification would be associated with an individual. Pet. Reply 12 (citing Ex. 1008 ¶¶ 46, 110, 146). Petitioner asserts that one of ordinary skill in the art would recognize the use of a pointer to implement the personality profile embodiment in Wright Jr.'s disclosure using tab-delimited

data. Pet. Reply 12 (citing Ex. 1041, 567:12–20; Ex. 1002, 28:37–44). Petitioner, however, has not explained sufficiently why such a modification of the Wright Jr. system to use a pointer to assign a form to an individual would be obvious to one of ordinary skill in the art. Therefore, Petitioner has not shown, by a preponderance of the evidence, that claims 2 or 23, or claim 3 that depends from claim 2, are unpatentable over Wright Jr.

4. Petitioner Establishes By a Preponderance of the Evidence That Wright Jr. Teaches Every Limitation of Claims 6, 7, 22, and 36

Claims 6 and 36 recite that the customized script program further "includes a command to display a message or a query upon receiving a response when the script program includes one or more queries to be presented." Petitioner asserts Wright Jr. describes displaying one question or statement (and if appropriate, a corresponding set of possible answers or responses) at a time on the display screen of the PDA. Pet. 44 (citing Ex. 1001, 7:6–10); '469 Pet. 50. Moreover, Petitioner asserts Wright Jr. provides that when a user answers each question, thereby providing response data, the forms engine executes a script program for that question and may perform data validation, sound an alarm, display a message, quit, launch another form, skip to another question, and so forth. Pet. 44 (citing Ex. 1001, 7:14–18); '469 Pet. 50. Finally, Petitioner asserts Wright Jr. teaches that the script allows the forms designer to go to another question based on the previous answer(s). Pet. 44 (citing Ex. 1001, 7:18–23); '469 Pet. 50. Patent Owner does not challenge this assertion specifically. We are persuaded that Petitioner sufficiently establishes, by a preponderance of the evidence, that claims 6 and 36 are unpatentable over Wright Jr.

Claims 7 and 22 recite "wherein said one or more messages comprise one or more types of information selected from the group consisting of reminders,

statements, quotations and information of benefit to the individual." Petitioner asserts Wright Jr. teaches that displayed messages include a question or statement, and if appropriate, a corresponding set of possible answers or responses. Pet. 45 (citing Ex. 1001, 7:6–10); '469 Pet. 37. Petitioner asserts Wright Jr. also teaches "displaying information of benefit to the individual, e.g., display of a 'help' message, and reminders or prompts." Pet. 45 (citing Ex. 1001, 10:37–41; 27:56–62); '469 Pet. 37. Patent Owner does not challenge this assertion specifically. We are persuaded that Petitioner sufficiently establishes, by a preponderance of the evidence, that claims 7 and 22 are unpatentable over Wright Jr.

5. Wright Jr. Does Not Teach Every Limitation of Claims 11, 12, 29, and 30

Claims 11 and 12 depend from claim 8. Claims 29 and 30 depend from claim 26. Claim 8 recites "the data merge program customizes the one or more generic script programs using personal data associated with each of the plurality of individuals to whom the one or more generic script programs are assigned." Claim 26 recites "the one or more generic script programs are customized using personal data associated with each of the plurality of individuals to whom the one or more generic script programs are assigned." Petitioner suggests that the results of filling out the form are the personal data that are used by Wright Jr. to customize the generic script program. Pet. 49; Pet. Reply 11–12. Petitioner does not explain sufficiently how one of ordinary skill in the art would be motivated to use the results of filling out the form to create another form. Accordingly, Petitioner has not shown sufficiently how Wright Jr. meets the limitations of claims 8 and 26, and, thus, it cannot show that Wright Jr. meets the limitations of claims 11, 12, 29, and 30.

6. Petitioner Establishes By a Preponderance of the Evidence That Wright Jr. Teaches Every Limitation of Claims 17 and 18

Claims 17 and 18 recite, respectively, a script generator for generating generic script programs and using the generic script program as a template to create customized script programs. Petitioner explains how Wright Jr. meets these limitations. Pet. 52–53. Patent Owner repeats arguments discussed above regarding the limitation in claim 1 of a generic script program. For the same reasons as discussed above, we do not find these arguments persuasive and are persuaded, by a preponderance of the evidence, that Wright Jr. renders claims 17 and 18 obvious.

7. Wright Jr. Does Not Teach Every Limitation of Claims 19 and 35

Claims 19 and 35 recite an insert command specifying types of personal data to be inserted by the data merge program. Petitioner relies on Wright Jr.'s ability to specify the location of personal data stored after the individual responds to the questions in the form rather than something that specifies the location in the form itself for data to be inserted. Pet. 53–54; '469 Pet. 49–50. Patent Owner argues correctly that the "statements [cited by Petitioner] in [Wright Jr.], however, have nothing to do with inserting personal data into a script program," as required by claims 19 and 35. PO Resp. 56. Therefore, Petitioner has not shown, by a preponderance of the evidence, that claims 19 and 35 are unpatentable over Wright Jr.

F. Obviousness over the Combination of Wright Jr. and Goodman

Petitioner argues in its Petitions that claims 1–37 are unpatentable over the combination of Wright Jr. and Goodman under 35 U.S.C. § 103(a), relying on the declaration of Dr. Stone (Ex. 1008) in support. Pet. 18–19, 34–38; '469 Pet. 20–27. We have reviewed the Petitions, Patent Owner Response, and Reply, as well

as the evidence discussed in each of those papers, and are persuaded, by a preponderance of the evidence, that claims 1–37 are unpatentable over the combination of Wright Jr. and Goodman. As detailed in Section II.E above, we found that Wright Jr. alone teaches or suggests the limitations of claims 1, 6–7, 17–18, 20–22, and 36 and we found that claims 2, 3, 11, 12, 19, 23, 29, 30, and 35 would not have been obvious based on Wright Jr. alone. Petitioner explains how the combination of Wright Jr. and Goodman meets the limitations of claims 1, 6–7, 17–18, 20–22, and 36. Pet. 34–38, 44, 45, 52, 53; '469 Pet. 32–37, 50, 51. We are persuaded by those explanations. Therefore, below we will discuss primarily claims 2–5, 8–16, 19, 23–35, and 37.

1. Combinability – Wright Jr. and Goodman

Petitioner asserts that "[o]ne of ordinary skill in the art would understand to combine Goodman and Wright Jr. because the script programs of Wright Jr. provide numerous advantages relating to flexibility and customized collection of user information." Pet. 22. Patent Owner argues that it would not have been obvious to one of ordinary skill in the art to have combined the teachings of Wright Jr. and Goodman. *See, e.g.*, PO Resp. 32–35. Patent Owner argues that Wright Jr. is limited in its teachings to handling skip patterns and performing error validation that occur between the questions in a form. Patent Owner also argues that it would not have been obvious to one of ordinary skill in the art to have combined the teachings of Wright Jr. with Goodman because the "actual teachings of [Wright Jr.] offer no significant advantages to the system of Goodman" and because Dr. Stone testified "'there is nothing in [Wright Jr.] that would specifically teach or instruct a person of ordinary skill in the art to combine [Wright Jr.] with the Goodman patent,' nor vice versa." PO Resp. 34–35.

"A reference may be read for all that it teaches, including uses beyond its primary purpose." *In re Mouttet*, 686 F.3d 1322, 1331 (Fed. Cir. 2012). Thus, all of Wright Jr.'s teachings regarding creation of electronic forms may be considered. Additionally, the combination of the known system of Wright Jr. and the known system of Goodman would have entailed no more than a combination of known systems to perform their known functions to achieve a predictable result. "The combination of familiar elements according to known methods is likely to be obvious when it does no more than yield predictable results." *KSR*, 550 U.S. at 416. Patent Owner does not demonstrate persuasively that the combination of Wright Jr. and Goodman would have entailed any more than combining familiar elements to achieve a predictable result. Therefore, we are not persuaded by Patent Owner's argument. Also, Patent Owner does not identify any authority (and we are aware of none) for the proposition that a reference somehow must be incomplete to be combinable with another reference under 35 U.S.C. § 103(a).

In conclusion, we are persuaded by Petitioner's showing that a person of ordinary skill in the art would have had sufficient reason to combine the teachings of Wright Jr. and Goodman.

2. Petitioner Establishes By a Preponderance of the Evidence That the Combination of Wright Jr. and Goodman Teaches Every Limitation of Claims 2–5 and 23–25

Claim 2 requires "a script assignment unit configured to . . . assign[] to each of the plurality of individuals at least one of the plurality of customized script programs." Claim 23 requires "assigning to each of the plurality of individuals at least one of the one or more customized script programs." Patent Owner argues that these limitations require "assigning different customized script programs to

different individuals." PO Resp. 47. As noted above in Section II.E.3, we find that Wright Jr. does not teach these limitations.

Petitioner asserts that Goodman teaches a "capability of managing up to millions of patients by appropriate individual identification and addressing such that information can be appropriately routed to each patient." Pet. 26 (citing Ex. 1002, 4:1–4, 18–22); '469 Pet. 24 (citing Ex. 1002, 2:54–58, 4:18–22). We are persuaded by this assertion. Patent Owner argues that Goodman does not teach anything about the use of pointers, as recited in claim 5. PO Resp. 49. Petitioner asserts Goodman discloses a pointer because it must deal with a large number of patients. Pet. 27; Ex. 1003, 4:1–4, 18-22, 39–43. Petitioner asserts one of ordinary skill would have recognized that in order to manage millions of patients and customized algorithms assigned to each of those millions, as disclosed in Goodman, pointers would be used. Pet. Reply 12 (citing Ex. 2007, 594:14–24). We have construed pointer to mean "an identifier that indicates the location of an item." We are persuaded by Petitioner that one of ordinary skill in the art at the time of the invention would recognize that an identifier would be used in assigning a customized script to a patient. Patent Owner also argues that Goodman does not teach the use of a database and does not disclose "generic script programs," as recited in claims 2–4. PO Resp. 46–47, 62. We found that these limitations were met by Wright Jr. in Section II.E.2 above.

As to claims 3-5 and 23-25, Petitioner explains how Wright Jr. meets these limitations. Pet. 24, 25, 31, 42–44; '469 Pet. 18, 24, 25, 37–42. We are persuaded by those explanations. Patent Owner does not offer any arguments in addition to those discussed above. Therefore, Petitioner has shown, by a preponderance of the evidence, that claims 2–5 and 23–25 are unpatentable over the combination of Wright Jr. and Goodman.

3. *Petitioner Establishes By a Preponderance of the Evidence That the Combination of Wright Jr. and Goodman Teaches Every Limitation of Claims 8–12 and 26–30*

Claim 8 recites "the data merge program customizes the one or more generic script programs using personal data associated with each of the plurality of individuals to whom the one or more generic script programs are assigned." Claim 26 recites "the one or more generic script programs are customized using personal data associated with each of the plurality of individuals to whom the one or more generic script programs are assigned." Patent Owner argues that Goodman does not meet the "customizing a generic script program" portion of these claims because it does not teach generic script programs. Petitioner relies on the combination of Wright Jr. and Goodman. As noted above, we find that Wright Jr. teaches generic script programs.

Petitioner asserts that Goodman provides for customizing an existing algorithm based on physiological data received from a patient. For example, Goodman provides that an existing algorithm can be modified by the health care provider, as appropriate, to reflect changes in the treatment plan, i.e., based on data received from the patient (i.e., personal data). Pet. 46 (citing Ex. 1003, 2:61–3:5, 5:13-24, 8:25–29). We are persuaded that Goodman uses personal data to create customized script programs. This teaching can be combined with Wright Jr.'s teaching that the existing script program may be a generic script program. Pet. Reply 12. Therefore, we are persuaded that Petitioner sufficiently establishes, by a preponderance of the evidence, that the combination of Wright Jr. and Goodman renders obvious claims 8 and 26.

As to claims 9, 10, 27, and 28, Petitioner explains how Wright Jr. meets the limitations of those claims. Pet. 27, 28, 47–49; '469 Pet. 26, 27, 44–46. We are

persuaded by those explanations. Patent Owner does not offer any additional arguments regarding claims 9, 10, 27, and 28 other than those discussed above.

Claims 11 and 29 require that personal data related to the individual must be stored in a look-up table. Claims 12 and 30 require the lookup table to be part of one of the databases recited in claims 1 and 20, respectively. Petitioner argues that Wright Jr. teaches or suggests that responses to form questions are stored in a tab-delimited format available for use in a database. Pet. 49 (citing Ex. 1002, 3:34–40, 14:1–10). Patent Owner argues that the results of filling out a form cannot also be the personal data that is merged into the form. PO Resp. 52. We are not persuaded. Goodman provides the suggestion to use Wright Jr.'s personality data or other personal data to customize a form, and nothing in the claims prohibits the personal data from being the result of a form filled out by an individual. Wright Jr. teaches that personal data can be stored in a tab-delimited format. Petitioner asserts that a lookup table is a table of values, such as an array or matrix. Pet. Reply. 13 (citing Ex. 1043 (Alan Freedman, The Computer Glossary (1994)), 318). We agree with that definition, and that data stored in a tab-delimited format meets the definition. *Id.* (citing Ex. 1008 ¶¶ 161–162.) We are persuaded, therefore, that the limitations of claims 11, 12, 29, and 30 are met by the combination of Wright Jr. and Goodman. Patent Owner does not offer any arguments in addition to those discussed above. Therefore, Petitioner has shown, by a preponderance of the evidence, that claims 8–12 and 26–30 are unpatentable over the combination of Wright Jr. and Goodman.

4. Petitioner Establishes By a Preponderance of the Evidence That the Combination of Wright Jr. and Goodman Teaches Every Limitation of Claims 13–15, 31–33, and 37

Claim 13 recites "the data merge program generates a customized script program by merging personal data for the individual with the generic script program." As noted above, we find that Goodman teaches merging personal data. Claim 31 recites "wherein the step of generating the customized script program comprises merging personal data for the individual with the generic script program." As to these claims, Patent Owner argues that Petitioner "wrongly relies on portions of Goodman describing embodiments different and distinct from the embodiment that uses algorithms." PO Resp. 54. We are not persuaded. Goodman discloses an embodiment that encompasses both the embodiment that uses algorithms and the so-called "paging service embodiment" in which "patient node 2" contains "data processor 10," "message device 20," and "medical device 70" (the embodiment that uses algorithms) where "wireless carrier 60 functions as the data processor 10 and the paging device 61 performs the message functions of the message device 20." Ex. 1003, 6:1–25, 7:35–45, Fig. 4a, Fig. 5. In view of Goodman's explicit disclosure of such a combination, we are not persuaded by Patent Owner's suggestion that Petitioner improperly relies on distinct embodiments.

Claim 14 further recites "the individual is identified through an individual identification code," and claim 15 further recites "the individual identification code is associated with the remotely situated apparatus." Claims 32 and 33 recite essentially the same limitations. Claim 37 recites that the "customized script is transmitted in response to receipt of the identification code." Petitioner argues that Goodman teaches the limitation of claim 14 because "an individual identification

code would be equivalent to an 'appropriate individual identification.'" Pet. 51. Patent Owner argues that this is a conclusory and unsupported allegation. PO Resp. 54–55. We agree with Petitioner. Goodman teaches using "individual identification, addressing and messaging." Ex. 1003, 4:18–22. Goodman also teaches a customized algorithm transmitted to a patient in response to receipt of information specifically provided by that patient. Pet. 27–28 (citing Ex. 1003, 8:37–63, 10:7–60); *see* Ex. 1003, 2:64–3:4. Petitioner argues Goodman teaches that data transfer can begin after identifying the message device. Pet. 27 (citing Ex. 1003, 7:3–5).

Patent Owner also argues that Petitioner "identifies no reason to modify the system of Goodman to require an additional communication step before the message device receives an algorithm." PO Resp. 67. Petitioner responds that "transmitting the identification code and patient responses to the central computer is the obvious way to ensure the patient responses are associated with the correct patient at the central computer." Pet. Reply 17 (citing Ex. 1022 ¶¶ 186–187, 239–242); *see also* Pet. 52. Thus, Petitioner provides sufficient reasoning with a rational underpinning to support a conclusion of obviousness. Petitioner also explains how Wright Jr. and Goodman meet the remaining limitations of claim 37. '469 Pet. 51–55. We are persuaded by these explanations for similar reasons to those discussed in Section II.E.2 in regard to claim 1. Thus, Petitioner has shown sufficiently that Goodman suggests the limitations of claims 13–15, 31–33, and 37.

5. Petitioner Establishes By a Preponderance of the Evidence That the Combination of Wright Jr. and Goodman Teaches Every Limitation of Claims 16 and 34

Claims 16 and 34 recite "wherein the personal data comprises one or more fields selected from the group consisting of name, physician, test results, and

appointment dates," which is essentially the same as the "user interface" limitation of claim 1. Petitioner explains how Wright Jr. and Goodman meet the limitations of claims 16 and 34. Pet. 52; '469 Pet. 49. Patent Owner does not make specific arguments regarding claims 16 and 34. We are persuaded by Petitioner's explanations related to claims 16 and 34.

6. Petitioner Establishes By a Preponderance of the Evidence That the Combination of Wright Jr. and Goodman Teaches Every Limitation of Claims 19 and 35

Claims 19 and 35 recite an insert command specifying types of personal data to be inserted by the data merge program. Petitioner argues that Goodman provides for accepting personal data, e.g., a measurement of a physiological parameter, into an algorithm. Ex. 1003, 8:45–49. The input is processed according to the algorithm, and the results of the processing are delivered to the patient as a message, the contents of which are responsive to changes in the patient's health status. Pet. 53–54. Goodman teaches that the measurement of a physiological parameter "is processed according to the algorithm, and the results of the processing are delivered to the patient 2 as a message." Ex. 1003, 8:45–51. Patent Owner argues correctly that "[p]rocessing measurements according to an algorithm is not the same as <u>inserting</u> personal data <u>into</u> the algorithm in response to an insert command." PO Resp. 58. Nonetheless, Petitioner relies on the combination of Wright Jr. and Goodman. Goodman suggests collecting personal data related to a script. Wright Jr. suggests inserting questions and text into a generic script. Therefore, Petitioner has shown, by a preponderance of the evidence, that claims 19 and 35 are unpatentable over the combination of Wright Jr. and Goodman.

G. Obviousness over Goodman and Wahlquist

Petitioner asserts that claims 20-37 would have been obvious under 35 U.S.C. § 103(a) over Wahlquist in combination with Goodman. Pet. 6.

Claims 20 and 37 recite customizing a script program from a generic script program. Goodman provides that an existing algorithm can be modified by the health care provider, as appropriate, to reflect changes in the treatment plan, i.e., based on data received from the patient (i.e., personal data) and health care provider. ’469 Pet. 46 (citing Ex. 1003, 2:61–3:5, 5:13–24, 8:25–29). However, that existing algorithm is itself customized to a particular patient. Ex. 1002, 2:54–3:5 (“[T]he host computer receives, from the health care provider, a treatment plan that is developed specifically for each patient. Algorithms are developed based on such a plan. . . . [That] algorithm can be modified by the health care provider, as appropriate, to reflect changes in the treatment plan.”). Petitioner argues that Goodman discloses generating algorithms that are based on treatment plans developed specifically for a patient. ’469 Pet. 20. Petitioner further argues that the algorithms of Goodman are “inherently generic across patients with the same disease.” ’469 Pet. 33–34. Patent Owner argues that the portion of Goodman cited by Petitioner merely states that algorithms can be developed for other health conditions. PO Resp. 41–42, 60 (citing Ex. 1003, 10:29–34). Patent Owner asserts that Goodman provides no details about those algorithms or whether they are “generic.” For example, elsewhere Goodman specifically describes an example of two patients with the same disease, asthma. Instead of teaching that there is anything “generic” across these two patients, Goodman shows two very specific and different processes in Figures 10A and 10B, which did not derive from a common template. *Id*. (citing Ex. 1003, 9:28–10:28, Figs. 10A & 10B; Ex. 2007 ¶ 184).

Petitioner responds that according to the table in column 9 of Goodman, there are parameters that are "generic" to a specific disease. Pet. Reply. 9. However, Goodman does not describe these parameters as an algorithm, which is what Petitioner relies on to meet the generic script program limitations. Additionally, Goodman also suggests that parameters are not generic to a particular disease because the parameters for a particular disease may change. Ex. 1003, 10:29–34. Thus, Petitioner has not demonstrated sufficiently that Goodman also teaches creating an algorithm based on an established existing "generic" algorithm. Petitioner has demonstrated that Goodman only discloses developing a patient specific treatment plan and does not disclose customizing a generic treatment plan.

Petitioner also argues that Wahlquist discloses selecting tests from a menu to build a script file. '469 Pet. 33. Wahlquist discloses a representative creating a "computerized case file which includes . . . user identification information." Ex. 1004, 2:10–14. Wahlquist also discloses that the representative "selects various diagnostic tests from a menu . . . to build a high level . . . script file." *Id.* at 2:18-23. Patent Owner argues that the tests "never become part of the 'script file' at all: the script file is created by the help desk representative and sent to the user's computer, while 'the actual test file instruction code is present on the user's diagnostic program disk,' which the user must have before calling the help desk representative." PO Resp. 60 (citing Ex. 1004, 3:37–43, 5:6–11).

As previously described, Petitioner explains that Wahlquist discloses creating a computerized case file and a (separate) script file. However, as Patent Owner points out, Petitioner does not demonstrate sufficiently that Wahlquist also discloses a generic script program that is customized. Instead, Wahlquist merely discloses creating a custom script program by selecting tests. Each test is not itself a "generic" script program within the meaning of the claims.

Accordingly, for the foregoing reasons, we are not persuaded that Petitioner has shown, by a preponderance of the evidence, that independent claims 20 and 37 are unpatentable over the combination of Wahlquist and Goodman. Additionally, we are not persuaded in connection with this ground of unpatentability as applied to claims 21–36, which ultimately depend from claim 20.

H. Secondary Considerations

As part of our obviousness analysis, we consider the evidence and arguments submitted by Patent Owner regarding secondary considerations of non-obviousness. *See Graham v. John Deere Co.*, 383 U.S. 1, 17–18 (1966). In particular, Patent Owner argues that commercial success, long-felt need, industry praise, teaching away by others, and copying demonstrate that the challenged claims would not have been obvious to a person of ordinary skill in the art.[5] PO Resp. 22–26. In support of its assertions, Patent Owner cites the testimony of Dr. David. *Id*. (citing Ex. 2007 ¶¶ 76–110).

1. Commercial Success

Patent Owner argues that the "Health Buddy" remote health monitoring system, released in 1999 by Health Hero (Patent Owner's predecessor company), was commercially successful. PO Resp. 23. According to Patent Owner, the device was used in a successful pilot program with the U.S. Department of Veterans Affairs ("VA"), and afterwards Health Hero "sold many tens of thousands of Health Buddy devices." *Id*.

[5] The parties refer to the challenged claims collectively in their arguments regarding secondary considerations, and we do the same. *See* PO Resp. 22–26; Pet. Reply 4–6.

Evidence of commercial success, however, "is only significant if there is a nexus between the claimed invention and the commercial success." *Ormco Corp. v. Align Tech., Inc.*, 463 F.3d 1299, 1311–12 (Fed. Cir. 2006). To establish a proper nexus between a claimed invention and the commercial success of a product, a patent owner must offer "proof that the sales [of the allegedly successful product] were a direct result of the unique characteristics of the claimed invention—as opposed to other economic and commercial factors unrelated to the quality of the patented subject matter." *In re Huang*, 100 F.3d 135, 140 (Fed. Cir. 1996). In addition, "if the commercial success is due to an unclaimed feature of the device," or "if the feature that creates the commercial success was known in the prior art, the success is not pertinent." *Ormco*, 463 F.3d at 1312; *see also In re Kao*, 639 F.3d 1057, 1070 (Fed. Cir. 2011) (requiring a determination of "whether the commercial success of the embodying product resulted from the merits of the claimed invention as opposed to the prior art or other extrinsic factors"). If a patent owner is able to show a sufficient nexus, "the burden shifts to the challenger to prove that the commercial success is instead due to other factors extraneous to the patented invention, such as advertising or superior workmanship." *J.T. Eaton & Co., Inc. v. Atlantic Paste & Glue Co.*, 106 F.3d 1563, 1571 (Fed. Cir. 1997).

Patent Owner has not established a sufficient nexus between the claimed monitoring system, method, or apparatus and the alleged commercial success of the Health Buddy. Patent Owner argues that the success of the Health Buddy was "directly attributable to the invention of the '192 patent." PO Resp. 24 (citing Ex. 2007 ¶¶ 81, 83, 88–89, 99). Patent Owner and Dr. David, however, do not provide any analysis of how the Health Buddy allegedly embodied the challenged claims, or explain in any detail why it was the unique characteristics of the *claimed* monitoring system, method, or apparatus that drove sales. Instead, Dr. David

testifies that media coverage emphasized "the simplicity of the product and the fact that it provided a simple set of questions that could be changed by a health care provider to take into account the needs of a particular patient through the 'Care Composer' feature," as well as "the ability of health care providers to quickly distinguish between patients that were within prescribed guidelines and patients that were not." Ex. 2007 ¶ 88. According to Dr. David, the former ability is the "scriptable communication feature claimed by the '192 patent." *Id*.

Patent Owner does not point to evidence in the record showing that the Health Buddy included the components or performed the steps of the challenged claims. Dr. David simply states that he reviewed various materials and spoke with Patent Owner personnel, and "understand[s]" that the Health Buddy "practiced each of the challenged claims." Ex. 2007 ¶ 73. Dr. David does not provide any analysis to support that conclusion, and acknowledged during his deposition that his conversations with Patent Owner personnel did not involve any discussion of the challenged claims. *See* Ex. 1041, 244:16–246:3.

Further, Dr. David testifies that "after using the Health Buddy [at the VA], inpatient admissions[,] . . . ER visits[,] . . . and hospital bed days for patients were reduced . . . ." Ex. 2007 ¶ 81 (citing Ex. 2054). Neither Patent Owner nor Dr. David asserts or demonstrates sufficiently, however, that any reduced inpatient admissions, ER visits, or hospital bed days were the impetus for the alleged "commercial success" or sales. Patent Owner does not demonstrate sufficiently that the monitoring system, method, or apparatus of the claims resulted in reductions in any of inpatient admissions, ER visits, or hospital bed days for patients. Hence, even assuming that the alleged reduction of inpatient admissions, ER visits, and/or hospital bed days in some way caused the alleged "commercial success," Patent Owner and Dr. David still do not demonstrate adequately a nexus

between the *claimed* monitoring system, method, or apparatus and the alleged commercial success.

Dr. David cites the "VA study" as allegedly indicating that the Health Buddy system "was capable of 'targeted education around disease(s), providing positive reinforcement for appropriate understanding of the disease(s), and compliance to recommended regimens.'" Ex. 2007 ¶ 83 (citing Ex. 2054, 267). Dr. David merely testifies as to alleged capabilities of the Health Buddy system but does not demonstrate sufficiently that any of the alleged capabilities resulted in (or had a nexus to) the alleged commercial success. In any event, Patent Owner does not demonstrate sufficiently that the monitoring system, method, or apparatus of the claims resulted in any of "targeted education," "positive reinforcement," or "compliance to recommended regimens."

To the extent Dr. David identifies a general "scriptable communication feature" allegedly recited in the claims, he does not identify particular claim language corresponding to that feature or explain how general discussions of patient monitoring equate with any particular limitation(s) of the claims. *See* Ex. 2007 ¶ 88 (citing Ex. 2020, which states that "Care Composer allows the service's users to design or modify protocols and assists them in defining patient health status data and designing disease-specific messages" and "Care Director allows authorized medical staff to view . . . information on groups of patients through graphic reports and detailed data displays"); s*ee also* Ex. 2007 ¶ 89 (citing Exs. 2021–2024, which describe a tool for "providing an online infrastructure through which providers can communicate daily with senior patients," a system "to help patients manage chronic illness more effectively," an "item" that helps "to keep [the] patient, and hospital aware of possible problems," and a system that

"will enable medical professionals to effectively track and support patients," respectively).

Any commercial success of the Health Buddy is only relevant if the Health Buddy actually was the claimed monitoring system or apparatus, or actually was used to practice the methods, recited in the challenged claims. Patent Owner has not provided sufficient evidence to show that was the case. *See In re DBC*, 545 F.3d 1373, 1384 (Fed. Cir. 2008) (finding no nexus absent evidence that "the driving force behind [the allegedly successful product's sales] was the *claimed* combination") (emphasis added); *Ormco*, 463 F.3d at 1311–12 (requiring proof that sales were a "direct result of the unique characteristics of the *claimed* invention") (emphasis added); *Huang*, 100 F.3d at 140 (same). Accordingly, the alleged commercial success of the Health Buddy does not support a conclusion of nonobviousness of the claims.

We also determine that Patent Owner's evidence of commercial success is insufficient because Patent Owner fails to establish how its sales figures relate to the overall market. "Information solely on numbers of units sold is insufficient to establish commercial success." *In re Baxter Travenol Labs*, 952 F.2d 388, 392 (Fed. Cir. 1991); *see also In re Huang*, 100 F.3d at 140 (declining to find evidence of commercial success because "[a]though [the inventor's] affidavit certainly indicates that many units have been sold, it provides no indication of whether this represents a substantial quantity in this market").

2. Long-Felt Need

Patent Owner argues that there was a "need in the field for remote monitoring products such as [Patent Owner's] Health Buddy," and that the Health Buddy improved on existing systems in various ways. PO Resp. 24–25. To support a conclusion of nonobviousness, an alleged long-felt need must have been

a persistent one that was recognized by those of ordinary skill in the art, must not have been satisfied by another before the challenged patent, and must have been satisfied by the claimed invention. *See Perfect Web Techs., Inc. v. InfoUSA, Inc.*, 587 F.3d 1324, 1332–33 (Fed. Cir. 2009); *Newell Cos. v. Kenney Mfg. Co.*, 864 F.2d 757, 768 (Fed. Cir. 1988). Patent Owner does not explain sufficiently why there was a long-felt need to solve a particular problem that others recognized but were unable to meet. As Patent Owner acknowledges, other remote patient monitoring systems existed prior to the Health Buddy. PO Resp. 24–25. Even assuming that the Health Buddy represented an improvement over those systems, that does not mean automatically that there was a recognized long-felt but unmet need in the art. Further, the evidence cited by Patent Owner and Dr. David pertains only to the Health Buddy itself and does not show recognition of a particular need *prior to* the Health Buddy. *See id*. (citing Exs. 2026, 2027, 2036); Ex. 2007 ¶¶ 91, 95–96, 102–105 (citing Exs. 2026, 2027, 2036); *Perfect Web*, 587 F.3d at 1332–33 ("'[L]ong-felt need is analyzed as of the date of an articulated identified problem and evidence of efforts to solve that problem.'") (citation omitted). Finally, Patent Owner does not show sufficiently that the '192 patent actually satisfied the alleged need. *See* PO Resp. 24. Thus, Patent Owner's evidence of long-felt need is not persuasive.

3. Industry Praise

Patent Owner argues that the Health Buddy received "great praise," citing two television news segments and various written publications. PO Resp. 25 (citing Ex. 2007 ¶¶ 98–103). Patent Owner contends that the industry praise "highlighted the ease of use of the device, made possible by the scripting invention of the '192 patent." *Id*. As with commercial success, however, evidence of industry praise is only relevant when it is directed to the merits of the invention

claimed. *See Ormco*, 463 F.3d at 1311. Patent Owner cites a general "scripting" feature, but does not tie the discussion in the cited materials to any particular limitation(s) of the challenged claims. Dr. David also cites numerous materials praising the Health Buddy in general, rather than praise due to specific features that are present in the claims. *See* Ex. 2007 ¶¶ 98–103 (describing, for example, awards won by the Health Buddy). Thus, Patent Owner has not established a sufficient nexus with the claimed methods, and industry praise of the Health Buddy does not support a conclusion of nonobviousness of the claims.

4. Teaching Away by Others

Patent Owner argues that there were other systems available when the Health Buddy was released that used "personal computers, or prior art methods, such as hospital initiated phone calls or patient diaries." PO Resp. 25 (citing Ex. 2007 ¶¶ 104–105). According to Patent Owner, the Healthy Buddy was different from those systems because it had a "very simplified four-button design" and "case manager interface" using "scripted question[s]." *Id*. at 25–26. We are not persuaded that the mere existence of alternatives in the marketplace is a secondary consideration of nonobviousness,[6] however, and Patent Owner does not explain sufficiently why the cited alternatives would have taught away from the claimed method. *See In re Fulton*, 391 F.3d 1195, 1201 (Fed. Cir. 2004) ("[t]he prior art's mere disclosure of more than one alternative does not constitute a teaching away . . . because such disclosure does not criticize, discredit, or otherwise discourage the solution claimed"). Moreover, any difference between

[6] Failure of others can be a secondary consideration of nonobviousness, but Patent Owner does not argue that any other system was a failure. *See Graham*, 383 U.S. at 17–18.

the Health Buddy and other systems would be immaterial because the challenged claims do not require a four-button design, which Patent Owner cites as an allegedly distinguishing feature of the Health Buddy. Again, what matters when considering secondary considerations of nonobviousness is what is claimed. Patent Owner's arguments are not directed to the challenged claims and are not persuasive.

5. Copying

Patent Owner argues that, as a result of the Health Buddy's initial success, the VA "codified" in a request for proposal ("RFP") various features of the Health Buddy, including "the requirement that all future telehealth messaging devices be capable of customizing user scripts specifically." PO Resp. 26 (citing Ex. 2007 ¶¶ 106–107). Patent Owner infers that other companies, such as Viterion, Inc. and Advanced Telehealth, Inc., copied the Healthy Buddy because they sold systems to the VA that complied with the RFP. *Id*.

Patent Owner's arguments regarding copying are not persuasive. "[C]opying requires evidence of efforts to replicate a specific product." *Wyers v. Master Lock Co.*, 616 F.3d 1231, 1246 (Fed. Cir. 2010). Patent Owner and Dr. David do not provide any analysis or explanation of how other companies allegedly copied the Health Buddy system. Indeed, Dr. David admitted that he never analyzed what other companies provided to the VA. *See* Ex. 1041, 177:21–25. Dr. David only states that Patent Owner personnel he spoke with "recalled" competing products, such as "the Viterion VT100 device," that complied with the RFP. Ex. 2007 ¶¶ 106–109. There is no evidence in the record, however, as to how "the Viterion VT100 device" worked. Dr. David also does not mention any product of the other company cited in the Patent Owner Response, Advanced Telehealth, Inc. Thus, Patent Owner has not shown sufficiently that anyone copied

the Health Buddy system. Further, even if it was proper to infer copying merely from compliance with the RFP, Dr. David admitted that the RFP could be satisfied by a system that does not practice the methods recited in the challenged claims. *See* Ex. 1041, 212:21–213:3. Patent Owner has not shown proof of copying that would support a conclusion of nonobviousness of the challenged claims.

Based on all of the evidence of record, including evidence of secondary considerations of nonobviousness submitted by Patent Owner, we determine that claims 1, 6, 7, 17, 18, 20–22, and 36 would have been obvious based on Wright Jr., and that claims 1–37 would have been obvious based on Wright Jr. and Goodman, under 35 U.S.C. § 103(a).

I. Motions to Exclude

The party moving to exclude evidence bears the burden of proof to establish that it is entitled to the relief requested—namely, that the material sought to be excluded is inadmissible under the Federal Rules of Evidence. *See* 37 C.F.R. §§ 42.20(c), 42.62(a). Petitioner seeks to exclude Exhibits 2010–2057 and paragraphs 70–110 of Exhibit 2007. Paper 57, 1. In particular, Petitioner argues that "Patent Owner failed to establish a nexus between the alleged evidence and the claimed features," that "[t]he secondary evidence has other gaps so fundamental as to warrant exclusion," and that, in certain paragraphs of Dr. David's testimony, Dr. David "only regurgitates what some [Patent Owner] witness told Dr. David, and reflects no independent analysis of the issue by Dr. David." Paper 57, 2, 6, 9.

We need not reach the merits of Petitioner's Motion to Exclude because, as explained above, even if the disputed evidence is considered, Patent Owner has not shown proof of secondary considerations that would support a conclusion of nonobviousness of the challenged claims. Accordingly, Petitioner's motion to exclude is *dismissed as moot*.

Patent Owner seeks to exclude paragraphs 61–90 of Exhibit 1022 (testimony from Dr. Stone regarding secondary considerations of nonobviousness). Paper 59, 1. We do not rely on the disputed evidence in rendering our Decision. Therefore, Patent Owner's motion to exclude is *dismissed as moot*.

J. Motion for Observation

Patent Owner's observations are directed to the cross-examination testimony of Dr. Stone (Ex. 2069), who was cross-examined after Petitioner filed its Reply. We have considered Patent Owner's observations and Petitioner's responses in rendering our decision, and have accorded the testimony the appropriate weight as explained above. *See* Obs. 1–15. Petitioner's responses are 28 pages, and exceed the 15-page limit specified by 37 C.F.R. § 42.24(b)(3). As such, only the first 15 pages of Petitioner's responses have been considered. *See* Obs. Resp. 1–15.

III. ORDER

Petitioner has demonstrated, by a preponderance of the evidence, that claims 1, 6, 7, 17, 18, 20–22, and 36 are unpatentable over Wright Jr., and that claims 1-37 are unpatentable over Wright Jr. and Goodman, under 35 U.S.C. § 103(a).

In consideration of the foregoing, it is hereby:

ORDERED that Petitioner has shown by a preponderance of the evidence that claims 1–37 of the '192 patent are unpatentable;

FURTHER ORDERED that Petitioner's Motion to Exclude is *dismissed*; and

FURTHER ORDERED that Patent Owner's Motion to Exclude is *dismissed*.

This is a final decision. Parties to the proceeding seeking judicial review of the decision must comply with the notice and service requirements of 37 C.F.R. § 90.2.

PETITIONER:

Daniel W. McDonald
Andrew J. Lagatta
MERCHANT & GOULD, P.C.
dmcdonald@merchantgould.com
alagatta@merchantgould.com

PATENT OWNER:

Don Daybell
Davin M. Stockwell
ORRICK, HERRINGTON & SUTCLIFFE LLP
ddaybell@orrick.com
dstockwell@orrick.com