Trials@uspto.gov
571-272-7822

Paper 17
Date: June 25, 2015

UNITED STATES PATENT AND TRADEMARK OFFICE

BEFORE THE PATENT TRIAL AND APPEAL BOARD

TRW AUTOMOTIVE US LLC,
Petitioner,

v.

MAGNA ELECTRONICS INC.,
Patent Owner.

Cases IPR2014-00256, IPR2014-00260, and IPR2014-00264
Patent 7,459,664 B2

Before JUSTIN T. ARBES, BENJAMIN D. M. WOOD, NEIL T. POWELL, and JO-ANNE M. KOKOSKI, *Administrative Patent Judges*.

POWELL, *Administrative Patent Judge*.

FINAL WRITTEN DECISION
35 U.S.C. § 318(a) and 37 C.F.R. § 42.73

I. INTRODUCTION

TRW Automotive US LLC ("TRW") filed three Petitions requesting *inter partes* review of claims 1, 2, 4, 13–25, 27–31, 32, 34–40, 42–45, 48–53, and 55–59 of U.S. Patent No. 7,459,664 B2 (Ex. 1002,[1] "the '664 patent"), as listed in the following chart.

Case No.	**Claims**	**Petition Paper No.**
IPR2014-00256	2, 4, 13, 19, 20, 24, 25, 27–31, 32, and 34	1
IPR2014-00260	1, 14–18, 21–23, 35, 37–39, 42, 44, 53, and 55–59	1
IPR2014-00264	33, 36, 40, 43, 45, and 48–52	1

On June 26, 2014, we instituted an *inter partes* review of claims 1, 2, 4, 13, 14, 16, 17, 20–24, 27–30, 32, 34–36, 39, 42, 43, 45, and 49–52 on three grounds of unpatentability (Paper 16, "Dec. on Inst."). Additionally, we consolidated the proceedings of IPR2014-00260 and IPR2014-00264 with the proceeding of IPR2014-00256. Dec. on Inst. 2.

Magna Electronics Inc. ("Magna") filed a Patent Owner Response (Paper 23, "PO Resp."). TRW filed a Reply (Paper 26, "Reply").

An oral hearing was held on February 19, 2015. A transcript of the hearing is included in the record. Paper 35 ("Tr.").

We have jurisdiction under 35 U.S.C. § 6(b). This Final Written Decision is issued pursuant to 35 U.S.C. § 318(a) and 37 C.F.R. § 42.73.

---

[1] For the purposes of clarity and expediency, we use IPR2014-00256 as representative of the three proceedings. Unless otherwise noted, all citations to "Pet." and "Ex." refer to the Petition and exhibits, respectively, in IPR2014-00256.

For the reasons that follow, we determine that TRW has shown, by a preponderance of the evidence, that claims 1, 2, 4, 13, 14, 16, 17, 20–24, 27–30, 32, 34–36, 39, 42, 43, 45, and 49–52 of the ’664 patent are unpatentable.

A. The ’664 Patent (Ex. 1002)

The ’664 patent describes “[a]n image sensing system for a vehicle.” Ex. 1002, Abstract. The image sensing system operates to detect certain external light sources, including oncoming headlights, leading taillights, road markers, and lane markers. *Id.* at col. 3, ll. 16–21; col. 12, ll. 61–63. The ’664 patent discloses performing various control functions based on the detection of light sources. For example, based on the detection of oncoming headlights or leading taillights of other vehicles, the system can control the headlights of the vehicle that includes the system. *Id.* at col. 2, ll. 25–30; col. 6, ll. 40–42. Additionally, based on the detection of lane markers, the system may assist with steering or provide a warning to the vehicle’s driver. *Id.* at col. 12, ll. 61–63. Figure 2 of the ’664 patent is reproduced below.

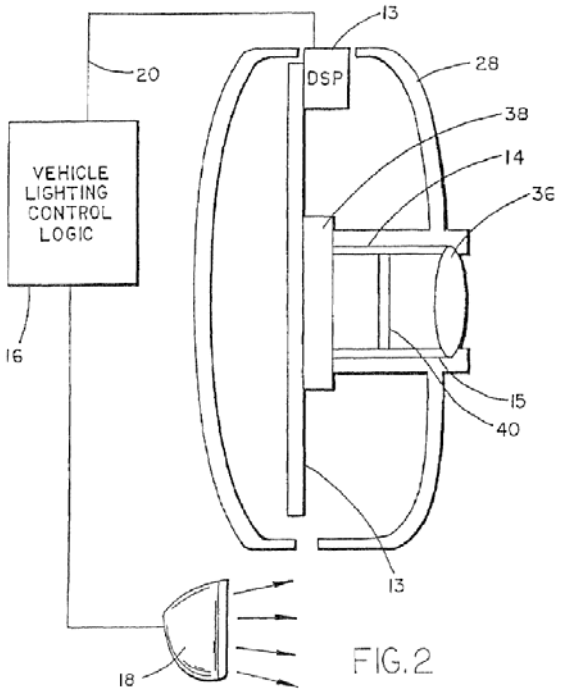

FIG. 2

Figure 2 shows components of one embodiment of the system. *Id.* at col. 3, ll. 35–37. The system includes imaging sensor module 14. *Id.* at col. 3, ll. 58–62. Imaging sensor module 14 includes optical device 36, e.g., a lens, array 38 of photon-accumulating light sensors, and filter array 40. *Id.* at col. 4, ll. 39–44. The ’664 patent discloses that array 38 may be implemented using a variety of different technologies, including a charge couple device (CCD) array, a complementary metal oxide semiconductor (CMOS) array, a hybrid of CCD and CMOS, or other photosensing technologies like a charge injection device (CID), a metal oxide semiconductor (MOS), photo diodes, and the like. *Id.* at col. 8, ll. 57–64. The system also includes digital signal processor 13 and lighting control logic module 16 connected to imaging sensor module 14 and headlamps 18. *Id.* at col. 3, ll. 58–66. The ’664 patent discloses that these components may form part of vehicle headlight dimming control 12, shown in Figure 1, which is reproduced below.

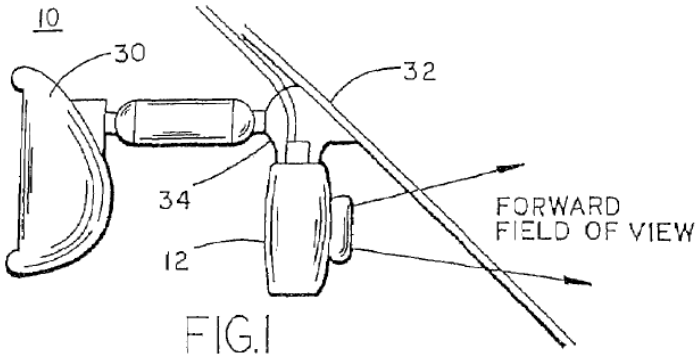

Figure 1 shows headlight dimming control 12, rearview mirror 30, windshield 32, and bracket 34. *Id.* at col. 3, ll. 58–60; col. 4, ll. 19–23. The ’664 patent discloses that bracket 34 may fixedly mount imaging sensor module 14 “to, or near, the vehicle’s windshield 32.” *Id.* at col. 4, ll. 19–22.

The ’664 patent indicates that some light sources constitute objects of interest and other light sources do not constitute objects of interest. For example, the ’664 patent states that “headlights of oncoming vehicles and taillights of leading vehicles are of interest to the control, irrespective of separation distance from the controlled vehicle, if the source is on the central axis of travel of the vehicle.” *Id.* at col. 2, l. 66–col. 3, l. 2. The ’664 patent further states that off-axis headlights and taillights also may be of interest, “but only if the source has a higher intensity level and is spatially larger.” *Id.* at col. 3, ll. 2–5. The ’664 patent also suggests that some light sources may be objects that are not of interest, such as “streetlights and reflections of the controlled vehicle’s headlights off signs, road markers, and the like.” *Id.* at col. 3, ll. 16–21.

The ’664 patent discloses using various aspects of the light received by the system to identify accurately objects of interest. For example, the ’664 patent discloses that its system may detect “spectral signatures” to identify taillights and headlights. *Id.* at col. 10, ll. 50–64. This technique leverages the fact that taillights are required to use red spectral bands and headlights “have a visible spectral signature which is predominantly white light.” *Id.* at col. 10, ll. 54–56, 60–61.

The ’664 patent also discloses discriminating between light sources based on their location within the image. For example, the ’664 patent discloses that “[a]dditional discrimination between oncoming headlights and leading taillights may be accomplished by taking into account the relative location of the source of light within the scene.” *Id.* at col. 9, ll. 44–47.

The ’664 patent further discloses that “[p]attern recognition may be used to further assist in the detection of headlights, taillights, and other

objects of interest." *Id.* at col. 11, ll. 14–16. Regarding pattern recognition, the '664 patent further discloses that

> [p]attern recognition identifies objects of interest based upon their shape, reflectivity, luminance, and spectral characteristics. For example, the fact that headlights and taillights usually occur in pairs could be used to assist in qualifying or disqualifying objects as headlights and taillights. By looking for a triad pattern, including the center high-mounted stop-light required on the rear of vehicles, stoplight recognition can be enhanced.

Id. at col. 11, ll. 16–23.

Claims 1, 24, 35, and 45 of the '664 patent are independent. Each of claims 2, 4, 13, 14, 16, 17, 20–23, 27–30, 32, 34, 36, 39, 42, 43, and 49–52 depends, directly or indirectly, from one of claims 1, 24, 35, and 45. Claim 1 is illustrative and is reproduced below:

> 1. An image sensing system for a vehicle, said image sensing system comprising:
>
> an imaging sensor;
>
> said imaging sensor comprising a two-dimensional array of light sensing photosensor elements formed on a semiconductor substrate;
>
> said imaging sensor disposed at an interior portion of the vehicle proximate the windshield of the vehicle, said imaging sensor being supported by a mounting structure fixedly attached to an interior surface of the vehicle windshield so as to physically fixedly position said imaging sensor within the interior cabin of the vehicle and close to and rearward of the windshield;
>
> said imaging sensor having a fixed field of view to the exterior of the vehicle through a window of the vehicle, the field of view encompassing the road traveled by the vehicle;
>
> a logic and control circuit;

> said logic and control circuit comprising an image processor for processing image data derived from said imaging sensor;
>
> said image processing comprising at least one of (i) spatial differentiation, and (ii) pattern recognition; and
>
> wherein said image sensing system detects objects external of the vehicle associated with the road traveled by the vehicle and present in the field of view of said imaging sensor, said image sensing system detecting objects by processing said image data to identify objects based on at least one of (i) spatial differentiation, and (ii) pattern recognition, said image sensing system generating at least one control output responsive to said detection of objects.

Ex. 1002, col. 13, ll. 9–40.

B. Prior Art

The pending grounds of unpatentability in this *inter partes* review are based on the following prior art:

U.S. Patent No. 4,970,653, issued November 13, 1990 ("Kenue," Ex. 1004).

U.S. Patent No. 5,096,287, issued March 17, 1992 ("Kakinami," Ex. 1005).

Oliver Vellacott, *CMOS in camera*, IEE Rev., May 1994, at 111 ("Vellacott," Ex. 1006).

Japanese Unexamined Patent Publication No. S62-131837, published June 15, 1987 ("Yanagawa," Ex. 1007).[2]

[2] We refer to "Yanagawa" as the English translation of the original reference. TRW provided an affidavit attesting to the accuracy of the translation. *See* Ex. 1007; 37 C.F.R. § 42.63(b).

C. Pending Grounds of Unpatentability

This *inter partes* review involves the following grounds of unpatentability:

References	Basis	Claims challenged
Kenue and Kakinami	§ 103(a)	1, 14, 16, 17, 21–23, 35, 39, 42, and 43
Kenue, Kakinami, and Vellacott	§ 103(a)	2, 4, 24, 27–30, 32, 34, 36, 45, and 49–52
Kenue, Kakinami, and Yanagawa	§ 103(a)	13 and 20

Dec. on Inst. 41–42.

II. ANALYSIS

A. Claim Interpretation

The claims of the ’664 patent have expired. *See* Pet. 1; Tr. 12, l. 16–13, l. 8. For claims of an expired patent, the Board’s claim interpretation is similar to that of a district court. *See In re Rambus Inc.*, 694 F.3d 42, 46 (Fed. Cir. 2012). We are guided, therefore, by the principle that the words of a claim “are generally given their ordinary and customary meaning” as understood by a person of ordinary skill in the art in question at the time of the invention. *Phillips v. AWH Corp.*, 415 F.3d 1303, 1312–13 (Fed. Cir. 2005) (en banc) (internal citations omitted). Only those terms in controversy need to be construed, and only to the extent necessary to resolve the controversy. *Vivid Techs., Inc. v. Am. Sci. & Eng’g, Inc.*, 200 F.3d 795, 803 (Fed. Cir. 1999).

1. "spatial differentiation" (claims 1, 22–24, 34, 35, 39, 43, 45, 51, and 52)

In the Decision on Institution, we interpreted the claim term "spatial differentiation" to mean "discrimination between objects accomplished by taking into account relative location." Dec. on Inst. 13–14. The parties do not dispute this construction, and we see no reason to modify that interpretation in light of the record developed at trial.

2. "pattern recognition" (claims 1, 16, 22–24, 29, 34, 35, 43, 45, 51, and 52)

In the Decision on Institution, we interpreted the claim term "pattern recognition" to mean "detection of an object of interest based upon shape, size, contour, motion, reflectivity, luminance, or spectral characteristics." Dec. on Inst. 15. The parties do not dispute this construction, and we see no reason to modify that interpretation in light of the record developed at trial.

3. "field of view" (claims 1, 21, 22, 24, 32, 35, 42, 43, 45, 49, and 50)

In the Decision on Institution, we interpreted the claim language "field of view" as referring to the range of space from which the imaging sensor receives light. Dec. on Inst. 17–18. The parties do not dispute this construction, and we see no reason to modify that interpretation in light of the record developed at trial.

4. "said image sensing system detecting objects by processing said image data to identify objects" (claim 1) and "said image sensing system detects objects by processing said image data to identify objects" (claims 35 and 45)

With respect to these claim limitations, Magna argues that "'detects objects' should be construed to mean sensing the existence of different types of objects and 'identify objects' should be construed to mean distinguishing

an object among many objects and indicating what that object is." PO Resp. 11. Similarly, Magna argues that the claims require that "different types of objects are detected and identified." *Id.* at 9. Magna further argues that "'detects objects . . . *to* identify objects' should be construed also to mean that these are two distinct functions, detect and identify" (*id.* at 11), asserting that "[a] [person of ordinary skill in the art] would understand 'detects' and 'identify' as being distinct and separate functions" (*id.* at 8). In support of these arguments, Magna cites the claim language itself, certain other portions of the '664 patent, and the testimony of Matthew A. Turk, Ph.D., as discussed in more detail below. *See id.* at 8–11.

TRW disagrees with Magna's assertion that "detects" and "identify" are "distinct and separate functions" required by the claims. Reply 1. TRW argues that Magna arrives at its construction by discussing the claim language with key words—"by processing said image data"—replaced by an ellipsis. *Id.* TRW asserts that the claim language "clearly requires that 'detects' is accomplished through 'processing data to identify objects,'" and that "[t]he two functions are not separate at all—they are made the same by the causal link of processing." *Id.* (citing Ex. 1012 ¶ 5). Additionally, TRW proposes that "the process of detection/identification is to confirm that an object in the field of view is of the type being sought by the processing algorithm." *Id.* at 2. In connection with this, TRW cites dictionary definitions and Jeffrey A. Miller, Ph.D.'s Rebuttal Declaration. *Id.* Specifically, TRW argues that Webster's Dictionary "defines 'identify' in context: '2a. to establish the identity of,'" and defines "identity" as "3: the condition of being the same with something described or asserted." *Id.* (citing Ex. 1009, 3).

We do not agree with Magna that the disputed claim language requires that detecting objects and identifying objects involve entirely separate functions. We agree with TRW that, according to its plain meaning, the disputed claim language does not require separately "detecting" and "identifying," but is structured so that performing one satisfies the other. *See* Ex. 1012 ¶ 5. Specifically, objects are not "detected" in isolation; they are detected "*by* processing . . . image data to identify objects."

Magna does not persuade us that the other portions of the Specification warrant construing the claim language differently than its plain meaning. Magna cites some passages in which the '664 patent discloses that it "detects" objects, and other passages in which the '664 patent discloses "identifying" objects. PO Resp. 9–11. Magna, however, does not cite anything in the Specification that discloses "detecting" objects to separately "identify" objects, as it contends is required by the disputed claim language.

In connection with his testimony in support of Magna's claim construction position, Dr. Turk cites certain portions of the '664 patent as purportedly using the terms "detect" and "identify" differently. Ex. 2032 ¶¶ 27–29, 31–32. With respect to "detect," Dr. Turk testifies that "[f]or example, the '664 patent states that it has the ability to 'detect' a red light source having an intensity above a particular threshold, a white light source having an intensity above a particular threshold, and a light level that is present over a long period of time." *Id.* ¶ 31 (citing Ex. 1002, col. 5, ll. 19–20, 28–31, 37–42). With respect to "identify," Dr. Turk testifies that "[f]or example, the '664 patent discusses its ability to '*identify* the headlights of

oncoming vehicles and the taillights of leading vehicles.'" *Id.* ¶ 32 (quoting Ex 1002, col. 2, ll. 25–30) (emphasis added by Dr. Turk).

These examples do not persuade us that the '664 patent uses the terms "detect" and "identify" differently, as the '664 patent also uses the term "detection" in substantially the same manner that the above example uses "identify." For instance, the '664 patent discloses that "[p]attern recognition may be used to further assist in the *detection* of headlights, taillights, and other objects of interest." Ex. 1002, col. 11, ll. 14–16 (emphasis added). Similarly, in addition to describing "pattern recognition" as assisting in "detection" of objects, the '664 patent in the very next sentence discloses that "pattern recognition" "identifies" objects of interest. *Id.* at col. 11, l. 16. Although different terms in a claim are presumed to have different meanings, that presumption may be rebutted when, as here, the Specification uses the terms interchangeably. *See In re Magna Elecs., Inc.*, 2015 WL 2110525, *5 (Fed. Cir. May 7, 2015) (rejecting Magna's argument that a "positional relationship" has a different meaning than "an indication of a distance" because the patent "essentially treats the two terms coextensively").

Additionally, Magna does not persuade us that the disputed claim language requires distinguishing between different types of objects or detecting and identifying different types of objects. Magna argues that the claims' use of the plural word "objects" suggests this meaning. *See* PO Resp. 9. We disagree; in the claim recitations "detecting objects," "detects objects," and "identify objects," the plain meaning of "objects" is more than one object, not more than one type of object. Magna also argues that "[t]he '664 patent discloses a vehicular imaging system capable of controlling

vehicular functions based on the detection and identification of many types of objects." *Id.* at 5. For this assertion, Magna cites the Abstract of the '664 patent and Dr. Turk's testimony that cites the Abstract. *Id.* The Abstract does not support Magna's assertion about a system detecting and identifying many different types of objects. The Abstract refers to only one type of object, stating that "[t]he imaging system detects lane markers." Ex. 1002, Abst.

Magna and Dr. Turk also cite examples where the '664 patent discusses detecting multiple types of objects or identifying multiple types of objects. PO Resp. 9–11; Ex. 2032 ¶¶ 30–32. We are not persuaded that the disclosure of a few examples where the system can detect or identify multiple types of objects warrants narrowing the claims from their plain meaning, particularly when the Abstract of the '664 patent suggests that the invention may encompass a system that "detects lane markers." *See SuperGuide Corp. v. DirecTV Enters., Inc.*, 358 F.3d 870, 875 (Fed. Cir. 2004) (holding that "a particular embodiment appearing in the written description may not be read into a claim when the claim language is broader than the embodiment"). Accordingly, we do not interpret claims 1, 35, and 45 as requiring separate detection and identification functions, or the detection or identification of multiple types of objects, and conclude that no further interpretation of the claim language is necessary.

5. "detects objects . . .present in the field of view of said imaging sensor" (claims 1 and 24) and "detects objects present in the field of view of said imaging sensor" (claims 35 and 45)

Magna argues that "[a] [person of ordinary skill in the art] would understand the 'detects objects . . . present in the field of view' to mean to detect objects that are 'present in substantially the entire field of view.'" PO

Resp. 11 (citing Ex. 2032 ¶ 35). TRW disagrees, arguing that "the claim language merely requires the object to be present in the field of view." Reply 4.

Magna argues that its proffered construction builds from our construction that "field of view" means "the range of space from which the imaging sensor receives light." PO Resp. 12 (citing Dec. on Inst. 18). Magna and Dr. Turk also assert that certain statements in the Specification support Magna's proffered construction. *Id*. at 12–13; Ex. 2032 ¶¶ 36–41. For example, they cite the following statement in the '664 patent:

> The present invention provides a vehicle control which is capable of identifying unique characteristics of light sources based upon a precise evaluation of light source characteristics made in *each portion of the scene forward of the vehicle*, in the vicinity of each light source, by separating each light source *from the remainder of the scene* and analyzing that source to determine its characteristics.

Ex. 1002, col. 2, ll. 14–20 (emphasis added by Magna); PO Resp. 12; Ex. 2032 ¶¶ 37–38.

Magna argues that this passage "emphasizes the ability of the '664 patent to sense objects across each portion of its field of view." PO Resp. 12. Magna also argues that "[t]he '664 patent . . . repeatedly discusses its ability to sense objects that are in different locations in its field of view." *Id*. at 12–13. Magna elaborates that "[f]or example, the specification discloses sensing headlights, taillights, streetlights, traffic lights, traffic signs, and lane markers." *Id.* (citing Ex. 1002, col. 2, ll. 25–27, col. 11, ll. 10–13, col. 12, ll. 13–17, 22–25, 61; Ex. 2032 ¶ 40). Additionally, based on the argument that "the '664 patent discusses using spatial differentiation in order to differentiate and distinguish lights at a periphery of the scene versus lights

located in the center of the scene," Magna argues that "the '664 patent specifically discusses its ability to sense substantially the entire field of view." PO Resp. 13 (citing Ex. 1002, col. 9, ll. 56–65, col. 10, ll. 7–10; Ex. 2032 ¶ 39).

TRW argues that Magna improperly proposes to import limitations into the claims from the Specification. Reply 4. TRW further argues that Magna cites statements in the '664 patent that do not support Magna's claim construction. *Id.*

The plain meaning of the claim language does not comport with Magna's proffered construction, and Magna does not persuade us that the disclosures in the Specification warrant narrowing the claim language from its plain meaning to Magna's construction. We do not agree with Magna's characterization that column 2, lines 14–20 of the '664 patent "*emphasize[]* the ability of the '664 patent to sense objects across each portion of its field of view." *See* PO Resp. 12. Additionally, Magna's argument that the '664 patent "repeatedly discusses its ability to sense objects that are in *different locations in its field of view*" facially does not support Magna's assertion that the claims require detecting objects "present in *substantially the entire field of view*." *See* PO Resp. 11–13 (emphases added). Furthermore, even assuming, *arguendo*, that the '664 patent's discussion of spatial differentiation constitutes an example of sensing substantially the entire field of view, as Magna asserts, this one example does not persuade us to narrow the claims from their plain meaning, particularly given that each of independent claims 1, 24, 35, and 45 recites "spatial differentiation" as an optional aspect of the claimed invention. *See, e.g.*, Ex. 1002, col. 13, ll. 35–38 ("said image sensing system detecting objects by processing said image

data to identify objects based on *at least one of (i) spatial differentiation, and (ii) pattern recognition*" (emphasis added)); *SuperGuide*, 358 F.3d at 875. Accordingly, we do not interpret claims 1, 24, 35, and 45 as requiring detection of objects present in substantially the entire field of view, and conclude that no further interpretation of the claim language is necessary.

B. Obviousness of Claims 1, 14, 16, 17, 21–23, 35, 39, 42, and 43 over Kenue and Kakinami

TRW asserts that claims 1, 14, 16, 17, 21–23, 35, 39, 42, and 43 are unpatentable under 35 U.S.C. § 103(a) as obvious over the combination of Kenue and Kakinami. IPR2014-00260 Pet. 17–42, 44–46; IPR2014-00264 Pet. 32–38, 54–57; Reply 1–11. TRW explains how a combination of Kenue and Kakinami allegedly discloses or suggests the claimed subject matter, and also relies on the Declarations of Dr. Miller. IPR2014-00260 Ex. 1008; IPR2014-00264 Ex. 1010; IPR2014-00256 Ex. 1012. Magna disagrees with TRW's assertions and relies on the Declaration of Dr. Turk. PO Resp. 1–4, 8–31 (citing Ex. 2032).

A claim is unpatentable under 35 U.S.C. § 103 if the differences between the subject matter sought to be patented and the prior art are such that the subject matter as a whole would have been obvious at the time the invention was made to a person having ordinary skill in the art to which the subject matter pertains. *KSR Int'l Co. v. Teleflex, Inc.*, 550 U.S. 398, 406 (2007). In the Decision on Institution, we adopted TRW's proposed definition of a person having ordinary skill in the art of the '664 patent at the time of the invention, which was supported by Dr. Miller's testimony. Dec. on Inst. 18–19. The parties have not disputed this definition, and we see no reason to modify it in light of the record developed during trial. Therefore, we conclude that a person having ordinary skill in the art would have had at

least the qualifications of or equivalent to either (1) a master's degree in electrical engineering or computer science, with course work or research in vision systems, or (2) an undergraduate degree in electrical engineering or computer science with at least two years of work making optical vision systems. *Id.* at 18 (citing Pet. 17–18; IPR2014-00256 Ex. 1011 ¶ 16).

Prior art references must be "considered together with the knowledge of one of ordinary skill in the pertinent art." *In re Paulsen*, 30 F.3d 1475, 1480 (Fed. Cir. 1994). A party that petitions the Board for a determination of obviousness must show that "a skilled artisan would have been motivated to combine the teachings of the prior art references to achieve the claimed invention, and that the skilled artisan would have had a reasonable expectation of success in doing so." *Procter & Gamble Co. v. Teva Pharms. USA, Inc.*, 566 F.3d 989, 994 (Fed. Cir. 2009) (quoting *Pfizer, Inc. v. Apotex, Inc.*, 480 F.3d 1348, 1361 (Fed. Cir. 2007)).

1. Overview of Kenue

Kenue discloses a method of using an image from a camera to detect lane markers and obstacles. Ex. 1004, Abstract. Figure 1 of Kenue is reproduced below.

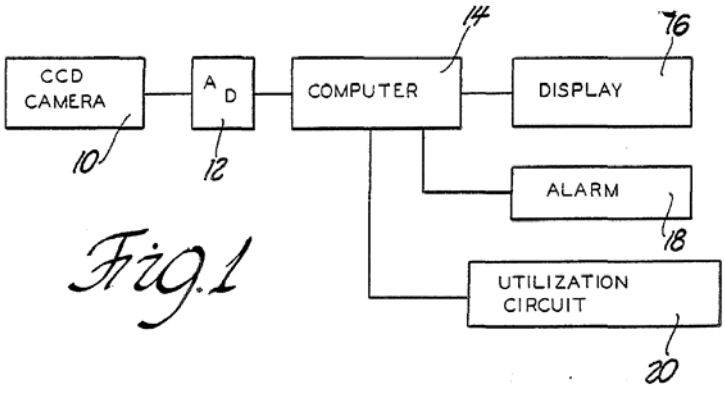

Figure 1 shows a block diagram of the components of the system used to implement Kenue's method. *Id.* at col. 2, ll. 7–8. The system includes CCD camera 10; analog-to-digital converter 12; computer 14; and output devices, including display 16, obstacle warning alarm 18, and utilization circuit 20. *Id.* at col. 2, ll. 28–36. Kenue discloses that CCD camera 10 is "mounted in a vehicle, say at the upper center of the windshield to capture the driver's view of the road ahead." *Id.* at col. 2, ll. 30–32. Figure 2 of Kenue is reproduced below.

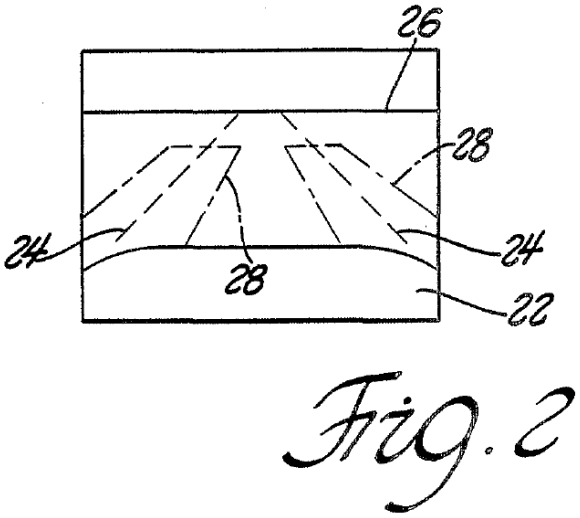

Figure 2 shows an example of an image received in the camera image plane. *Id.* at col. 2, ll. 9–10. When processing the image to detect lane markers, Kenue's system defines search areas in which to look for the lane markers. *Id.* at col. 1, ll. 59–66; col. 2, ll. 44–48; col. 3, ll. 3–6. For example, boxes 28 in Figure 2 illustrate search areas defined by the system. *Id.* at col. 3, ll. 3–6.

Kenue discloses two approaches to searching for lane markers within the search areas. One approach uses template matching, and the other approach uses a Hough transform. *Id.* at col. 2, ll. 41–44. In the template

matching approach for detecting lane markers, "a template or window of desired intensity and shape is correlated with the image to create a correlation matrix." *Id.* at col. 3, ll. 22–26.

In the approach implementing the Hough transform, the system searches the left and right edges of the lane markers for at least two adjacent edge pixels, and then traces the boundaries of the lane marker until the top of the image is reached or no edge pixels are found. *Id.* at col. 6, ll. 12–17. Subsequently, if no obstacle is detected within the lane boundaries, the system performs a Hough transform. *Id.* at col. 6, ll. 18–26. This involves approximating the lane boundaries with several straight lines represented in the Hough domain. *Id.* at col. 6, ll. 27–35. Figures 7a and 7b of Kenue are reproduced below.

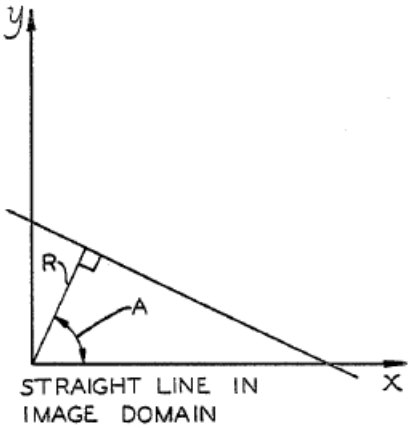

Fig. 7a

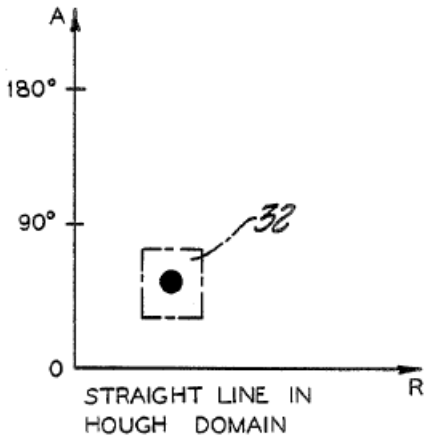

Fig. 7b

Figures 7a and 7b illustrate representations of a line in the Hough domain. More specifically, Figure 7a illustrates a line in the image plane, and Figure 7b illustrates the Hough transform of the same line. *Id.* at col. 6, ll. 36–37. The parameters defining the Hough transform of the line include

R, which is the minimum distance from the line to the origin, and A, which is the "angle between the normal to the line and the x axis." *Id.* at col. 6, ll. 36–41.

In both the template matching and Hough transform approaches, the system detects obstacles by counting strong edge points in the area between the lane boundaries. *Id.* at col. 3, ll. 59–63; col. 6, ll. 18–22. If this count indicates an obstacle closer than 50 feet away, the system generates an obstacle warning. *Id.* at col. 3, ll. 65–68; col. 6, ll. 22–23; col. 3, ll. 10–17. As to how the system determines whether an obstacle is closer or farther than 50 feet away, Kenue discloses:

> The obstacle distance is determined by the ground level obstacle image since the image plane calibration does not take into account the vertical height of the object. As seen in FIG. 3, the top of the vehicle 30 appears to be beyond the horizon as seen in the image plane although the vehicle 30 is actually close as is realistically shown near ground level. Thus for obstacle detection, only the bottom of the vehicle 30 image is scanned since it is in the near portion of the image plane.

Id. at col. 4, ll. 2–10.

2. Overview of Kakinami

Kakinami discloses "[a] video camera for an automobile." Ex. 1005, Abstract. Figure 2a, reproduced below, provides a cross-sectional view of the automobile and the video camera mounted to it. *Id.* at col. 2, ll. 6–7.

Fig. 2a

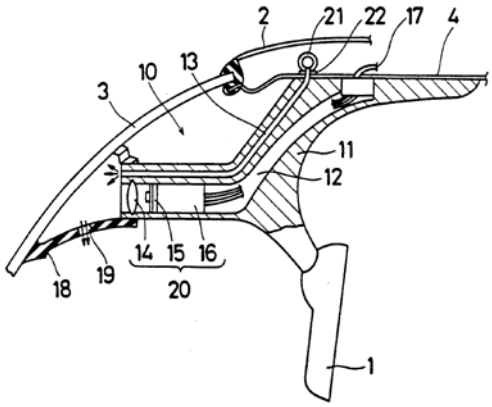

As shown in Figure 2a, Kakinami discloses that video camera 20 is mounted on arm 11, which supports rearview mirror 1. *Id.* at col. 2, ll. 15–21. Kakinami discloses positioning video camera 20 "to shoot scenes through the front glass windshield 3 through an area covered by the wipers 23. The wipers 23 clean the front glass windshield 3 when it rains or the front glass is dirty so the video camera 20 is provided with good visibility through the front glass windshield 3." *Id.* at col. 2, l. 64–col. 3, l. 2.

3. Independent claims 1 and 35

We have reviewed the evidence and arguments presented in the Petition and determine that TRW has demonstrated, by a preponderance of the evidence, that all of the limitations of each of claims 1 and 35, considered as a whole, would have been obvious in view of Kenue and Kakinami. IPR2014-00260 Pet. 17–30, 36–42; IPR2014-00260 Ex. 1008 ¶¶ 13–19, 36–37. The parties present arguments that focus on four aspects of claims 1 and 35: (1) "detecting objects by processing said image data to identify objects" (claim 1) and "detects objects by processing said image data to identify objects" (claim 35); (2) "detects objects . . . present in the field of view of said imaging sensor" (claim 1) and "detects objects present

in the field of view of said imaging sensor" (claim 35); (3) "said imaging sensor comprising a two–dimensional array of light sensing photosensor elements" (claims 1 and 35); and (4) "said imaging sensor being supported by a mounting structure fixedly attached to an interior surface of the vehicle windshield" (claims 1 and 35). We address these arguments in turn.

a. "detecting objects by processing said image data to identify objects" (claim 1) and "detects objects by processing said image data to identify objects"

TRW contends that Kenue teaches "said image sensing system detecting objects by processing said image data to identify objects," as recited in independent claim 1. IPR2014–00260 Pet. 26–27, 29. Similarly, TRW contends that Kenue teaches "said image sensing system detects objects by processing said image data to identify objects," as recited in independent claim 35. *Id.* at 39–40, 42.

TRW argues that Kenue teaches these limitations by performing pattern recognition using template matching. IPR2014–00260 Pet. 26–27, 39–40 (citing Ex. 1004, col. 3, ll. 22–26, col. 3, ll. 57–63, col. 4, ll. 5–10, 37–46, col. 6, ll. 27–33). TRW cites Kenue's disclosure that in a template matching algorithm, "a template or window of desired intensity and shape is correlated with the image to create a correlation matrix." *Id.* at 39 (citing Ex. 1004, col. 3, ll. 22–26). TRW argues that "[o]bjects of interest may include, *inter alia*, the 'broken or solid stripes or lane markers.'" *Id.* at 27 (citing Ex. 1004, col. 2, ll. 40–51). TRW also asserts that "[t]he template matching algorithm may utilize strong edge points to identify obstacles." *Id.* at 40 (citing Ex. 1004, col. 3, ll. 57–63).

Magna argues that TRW and Dr. Miller do not explain how Kenue "identifies objects." PO Resp. 17. Magna asserts that "Kenue is specific to

lane markers and cannot possibly detect and identify objects as disclosed and claimed in the '664 patent." *Id.* (citing Ex. 2032 ¶¶ 53–54). Magna elaborates that "Kenue's system *presupposes* what it finds are lane markers" and that "[a] system that is only specific to one object cannot *identify objects* as is recited in the claims because it cannot distinguish between objects and indicate what that object specifically is." *Id.* at 18 (citing Ex. 2032 ¶ 54). Magna also argues that Kenue's system does not "detect objects . . . *to* identify objects" because it automatically determines that what it finds are lane markers, such that it does not have a separate step for identification. *Id.*

Magna further argues that Kenue's "treatment of obstacles does not include the ability to *identify objects* because Kenue does not indicate with specificity what that obstacle is." *Id.* (citing Ex. 2032 ¶ 55). Magna argues that Kenue's system "assumes that an obstacle is present" when the number of strong edge points between lane markers exceeds a threshold. *Id.* at 18–19. Magna contends that when Kenue "assumes" the presence of an obstacle in the road it does not "identify" an object because "[t]his obstacle may be another vehicle, a fallen tree, or a box on the road ahead but Kenue cannot indicate with specificity what the obstacle is." *Id.* (citing Ex. 2032 ¶¶ 55–57).

In response to Magna's arguments, TRW argues that Magna's assertion about separate detection and identification of objects fails because it rests on an erroneous claim construction. Reply 5. TRW also argues that Kenue discloses identification of objects. *Id.* at 5–7. TRW argues that Kenue "detects lane markers and lane boundaries as objects of interest by processing to identify these objects." *Id.* at 5 (citing Ex. 1004, Figs. 4a, 4b, col. 3, l. 39–col. 4, l. 31). TRW also argues that in Kenue's template-

matching process, "[a] correlation matrix is searched for minimum values," and that "[t]hese values 'identify' the lane marker as an object." *Id.* at 7. TRW also argues that Kenue teaches identifying an obstacle by counting pixels within 50 feet having a gray level higher than 150, and comparing the number of such pixels to a threshold. *Id.* at 6.

We are persuaded that Kenue's disclosure related to template matching teaches the claim limitation "detecting objects by processing said image data to identify objects," as recited in claim 1, as well as the claim limitation "said image sensing system detects objects by processing said image data to identify objects," as recited in claim 35. Kenue teaches detection of lane markers, which Magna does not dispute are objects. *See, e.g.*, Ex. 1004, col. 1, ll. 59–62 ("The invention is . . . a method of detecting lane markers."); *id*. at col. 3, ll. 3–4 ("broken line boxes 28 around the markers 24 define the area to be searched for detecting markers"). This disclosure meets the foregoing limitations of claims 1 and 35 because, as explained in Section II.A.4 above, we are not persuaded by Magna's argument that the claims require identification separate from detection.

Moreover, we are persuaded that Kenue teaches identifying lane markers. Kenue discloses:

> The template matching algorithm is widely used in image recognition and computer vision applications. In this algorithm, a template or window of desired intensity and shape is correlated with the image to create a correlation matrix. The elements of this correlation matrix indicate the quality of the match between the template and the image at all locations, according to some metric.

Ex. 1004, col. 3, ll. 22–29. Subsequently, Kenue discusses "a flow chart of an image processing method which uses a template matching algorithm." *Id.*

at col. 3, ll. 39–41. Kenue shows this flow chart in Figures 4a and 4b.[3] In Figure 4a, Kenue shows at 56 that the process involves "in search area correlate a 5+5 window with image to *identify* markers" (emphasis added). Kenue discusses further details of template matching in connection with Figure 5. *Id.* at col. 4, ll. 32–50. Kenue elaborates that in this template matching operation, "a window of size 5 X 5 pixels with constant gray level of 240 is correlated with the image," and that the system uses a correlation matrix and a threshold to select elements representing marker positions. *Id.* at col. 4, ll. 50–52. In view of these disclosures, we are persuaded that Kenue's template matching algorithm identifies lane markers.

Regarding Magna's argument that Kenue does not teach distinguishing between and identifying multiple types of objects, as discussed in Section II.A.4 above, Magna does not persuade us that the claims require doing so. Furthermore, even if we agreed with Magna's claim construction argument, we are still persuaded that Kenue teaches the claim limitations. In particular, we are persuaded that in addition to identifying lane markers, Kenue discloses detecting and identifying obstacles, as well as distinguishing obstacles from lane markers. *See e.g.*, IPR2014-00260 Pet. 40; Reply 6; Tr. 17, ll. 18–25, 19, ll. 6–14. Kenue discloses detecting and identifying obstacles by counting the number of strong edge points between the lane boundaries of the previous frame and comparing to a threshold. *See* Ex. 1004, col. 3, ll. 59–62. With respect to

[3] Kenue states that the flow chart appears in "Figs. 4a and 4c," but we read this as containing a typographical error and intending to refer to Figures 4a and 4b, as Kenue does not include a Figure 4c. *See* Ex. 1004, col. 3, ll. 39–41.

distinguishing obstacles from lane markers, Kenue discloses, for example, that "it is assumed that the obstacle has a high content of vertical and horizontal lines whereas the lane markers to be detected comprise diagonal lines." *Id*. at col. 4, ll. 15–17; *see* Tr. 35, ll. 1–4 (Magna acknowledging that "in some sense [Kenue] is distinguishing between an obstacle, something else on the road, and the lane marker").

b. "detects objects . . . present in the field of view of said imaging sensor" (claim 1) and "detects objects present in the field of view of said imaging sensor (claim 35)

TRW argues that Kenue teaches the claim limitation "said image sensing system detects objects . . . present in the field of view of said imaging sensor," as recited in independent claim 1, as well as the claim limitation "said image sensing system detects objects present in the field of view of said imaging sensor," as recited in independent claim 35. IPR2014-00260 Pet. 26, 29, 38, 41–42. In support of these assertions, TRW cites Kenue's disclosure that "[t]his invention relates to a vision method of detecting lane boundaries and obstacles close to a vehicle within the lane boundaries, and particularly to such a method employing image processing techniques and which is operative for moderately marked roads." Ex. 1004, col. 1, ll. 7–11; IPR2014-00260 Pet. 26, 29, 41–42. With respect to claim 35, TRW also argues that "Kenue detects objects of interest as lane markers, 'trees, overpasses and signs.'" IPR2014-00260 Pet. 38.

Magna argues that "TRW alleges that Kenue detects objects in its field of view based on an incorrect claim construction." PO Resp. 19. Magna asserts that Kenue teaches sensing objects only in certain portions of the field of view of its imaging sensor. *Id.* at 19–21. Magna concludes that Kenue does not teach the above claim limitations because "Kenue can only

sense objects within a limited field of view, not in substantially the entire field of view, as required by the independent claims." *Id.* at 21.

TRW persuades us that Kenue teaches the above claim limitations, as TRW demonstrates that Kenue detects objects that are present in the field of view of its imaging sensor, including obstacles and lane markers. As explained in Section II.A.5 above, we are not persuaded that the claim limitations require detecting objects in "substantially the entire field of view," as Magna contends. Accordingly, it is Magna's arguments, not TRW's, that rest on an incorrect claim construction.

c. "said imaging sensor comprising a two-dimensional array of light sensing photosensor elements"

TRW asserts that Kenue teaches the claim limitation "said imaging sensor comprising a two-dimensional array of light sensing photosensor elements," as recited in independent claims 1 and 35. IPR2014-00260 Pet. 20, 27–28, 36–37, 40–41. TRW argues that Kenue's CCD video camera 10 corresponds to the claimed "imaging sensor." *Id.* at 20, 36. TRW argues that "[t]he photosensor array is formed in two dimensions where the processing algorithm searches one row at a time (1004-010 at 4:33-34) and the search may process a window of 5X5 pixels." *Id.* at 20, 36–37 (citing Ex. 1004, col. 4, ll. 33–34, 49–51).

Magna argues that Kenue never explicitly discloses that its camera has a two-dimensional array of light sensing photosensor elements, and that Kenue's disclosure of a black and white CCD video camera does not teach necessarily a two-dimensional image sensing array. PO Resp. 21–22. Citing Dr. Turk's testimony and U.S. Patent No. 5,075,768 (Ex. 2034), Magna argues that "video camera" and "CCD" could both refer to one-dimensional arrays. *Id.* Additionally, Magna and Dr. Turk assert that

Kenue's disclosures of processing one row of image data at a time and processing a 5X5 window of pixels do not demonstrate that Kenue's video camera has a two-dimensional array of photosensor elements. *Id.* at 22 (citing Ex. 2032 ¶ 67). Magna and Dr. Turk reason that this processing happens after the raw image data is "digitized . . . into a 512 x 512 x 8 image," such that Kenue's system might digitize data from a one-dimensional array of light sensors into a multidimensional matrix that is processed by the system. *Id.* at 22–23; Ex. 2032 ¶¶ 67–70.

In response, TRW argues that Magna advances "a narrow *ipsis verbis* argument taken to an implausible extreme in view of what [Kenue] teaches elsewhere." Reply 8. TRW argues that Kenue's "camera is capable of imaging across the entire scene to define 'reference markers' indicating lane boundaries." *Id.* at 9. TRW also argues that Kenue's system could do this only with a two-dimensional imaging array, not with a linear imager, as proposed by Magna and Dr. Miller. *Id.* (citing Ex. 1012 ¶ 12). Additionally, TRW and Dr. Miller assert that, contrary to the assertion of Magna and Dr. Turk, Kenue's disclosure of digitizing a raw image into a 512 X 512 X 8 image connotes the use of a 512 X 512 imaging array. *Id.* at 9; Ex. 1012 ¶ 12. Noting that Kenue repeatedly refers to a "camera image plane" shown in Figure 2, TRW argues that this further supports its contention that Kenue discloses a two-dimensional array. *Id.* TRW also asserts that "Dr. Turk admits that (1) the 'camera image plane' corresponds to the *image sensor* in Kenue (not merely the converted image) and (2) a 'plane' connotes a 'two-dimensional surface.'" *Id.* at 9–10 (citing Ex. 1013, 198, ll. 9–13).

We find TRW's arguments and evidence more persuasive than Magna's. TRW's assertions and Dr. Miller's testimony persuade us that a

person of ordinary skill in the art would understand from Kenue's disclosures of a "camera image plane," two-dimensional image data, and the way the system uses the image data in a vehicular application that Kenue's CCD video camera 10 uses a two-dimensional array of photosensor elements. Pet. 19, 26, 29–30, 35; Ex. 1011 ¶¶ 19–20, 23–24; Reply 8–11; Ex. 1012 ¶¶ 11–12; IPR2014-00260 Pet. 20, 27–28, 36–37, 40–41; IPR2014-00260 Ex. 1008 ¶¶ 18–19, 36–37; IPR2014-00264 Pet. 42, 47; IPR2014-00264 Ex. 1010 ¶¶ 25–26. Indeed, Dr. Turk acknowledges that a "camera image plane," i.e., a two-dimensional surface, corresponds to the image sensor in Kenue. Ex. 1013, 198, ll. 9–13. Further, even assuming, *arguendo*, that Kenue's system could use a one-dimensional imaging sensor, as argued by Magna, the weight of the evidence persuades us that Kenue at least suggests using a two-dimensional image sensor.

d. "said imaging sensor being supported by a mounting structure fixedly attached to an interior surface of the vehicle windshield"

TRW contends that this limitation would have been obvious over Kenue and Kakinami. TRW asserts that Kenue teaches an imaging sensor "within the interior cabin of the vehicle and close to and rearward of the windshield," as required by independent claims 1 and 35. IPR2014-00260 Pet. 21, 37. TRW states, however, that although Kenue does specify mounting on the windshield, it "does not expressly say that the sensor is 'fixedly attached' . . . 'so as to physically fixedly position' the sensor," as further required by claims 1 and 35. *Id.* at 19, 21, 37.

TRW argues that "Kakinami shows a class of fixed mounting structure that retains a camera in the arm of a rearview mirror assembly proximate the windshield in the interior of an automotive cabin." *Id.* at 23.

TRW asserts that Kakinami discloses an imaging sensor mounted in a rearview mirror assembly and fixedly attached to a windshield within the interior cabin of the vehicle, close to and rearward of the windshield. *Id.* at 23–24, 37. TRW argues that Kakinami's boot 18 provides a vacuum adherence to windshield 3. *Id.* at 23–24. TRW also cites Kakinami as disclosing:

> wherein said imaging sensor is supported by said mounting structure so as to physically fixedly position said imaging sensor close to and rearward of a portion of the windshield swept by a windshield wiper of the vehicle, and wherein said imaging sensor has a fixed forward field of view to the exterior of the vehicle through the portion of the windshield that is swept by the windshield wiper of the vehicle.

See IPR2014-00260 Pet. 33, 46. TRW asserts that "it was commonplace to adhere rearview mirrors to windshields as of the respective priority dates afforded to the various claims." *Id.* at 22. TRW argues that "[t]he Kakinami mount and the adhered assembly of common knowledge are . . . known types of mounts that may be selected from a field of commonsense options from among a finite number of commonsense design choice options for mounting a forward-looking camera." *Id.* at 24. TRW further asserts that a person of ordinary skill in the art would have had reason to combine Kakinami with Kenue to achieve the advantage that "wipers 23 clean the front glass windshield 3 when it rains or the front glass is dirty so the video camera 20 is provided with good visibility through the front glass windshield 3," as disclosed by Kakinami at column 2, line 67 through column 3, line 2. *Id.* at 33, 46.

Magna contends that "Kenue and Kakinami do not disclose or suggest an imaging sensor supported by a mounting structure fixedly attached to an

interior surface of the vehicle windshield." PO Resp. 24. Regarding TRW's assertion that adhering rearview mirrors to windshields was commonplace, Magna argues that "[a]s the header-mounted rearview mirror of Kakinami clearly and unequivocally attests, it was also commonplace not to adhere rearview mirrors to windshields." *Id.* at 24 n.20. Magna also argues that to the extent TRW contends it was inherent to have a mirror assembly fixedly attached to the windshield, TRW does not provide any basis in fact or technical reasoning to support such an assertion. *Id.* at 24–25. Additionally, Magna argues that TRW's argument that it was known to adhere rearview mirror assemblies does not address the claim language, which requires mounting an "imaging sensor," not a rearview mirror, to the windshield. *Id.* at 25.

Magna further argues that Kakinami does not disclose an imaging sensor mounted in a rearview mirror assembly and fixedly attached to a windshield. PO Resp. 26–29. In support of this contention, Magna notes that Kakinami's boot 18 cannot achieve a vacuum attachment to the windshield because boot 18 includes "a small opening 19 through which air sent from the air passage 13 into the boot 18 is evacuated." *Id.* at 27–28.

In response to Magna's arguments, TRW maintains that Kenue and Kakinami teach the claimed mounting arrangement. Reply 10–11. TRW argues that Kenue's disclosure of mounting the camera at the upper center of the windshield "strongly suggests an adhesive mount, as is well known in the art." *Id.* at 10 (citing Ex. 1012 ¶ 13). Regarding Magna's assertion that it was "also commonplace not to adhere rearview mirrors to windshields," TRW argues that Magna's "use of 'also' admits to the commonplace nature concerning either type of mount used interchangeably, where Kenue

suggests the type of mount that is claimed." *Id.* TRW further argues that "[t]he admitted interchangeability suggests use of an adhesive windshield mount." *Id*. Additionally, TRW maintains that Kakinami's boot 18 forms a suction adherence to windshield 3. *Id.* at 10–11 (citing Ex. 1005, col. 2, ll. 41–44; Ex. 1012 ¶ 14).

We are persuaded that the claimed mounting arrangement would have been obvious in view of Kenue and Kakinami. Regardless of whether Kakinami's boot 18 provides a vacuum adherence to windshield 3, it couples arm 11 and video camera 20 to an interior surface of windshield 3. *See e.g.*, Ex. 1005, Abst., col. 2, ll. 36–54, Fig. 2a. Additionally, we are persuaded that Kakinami's video camera 20 is physically and fixedly positioned within the interior cabin of the vehicle and close to and rearward of the windshield, and is supported by a mounting structure so as to physically fixedly position video camera 20 close to and rearward of a portion of the windshield swept by a windshield wiper. *See, e.g.*, Ex. 1005, col. 1, ll. 37–41, 44–52, col. 2, ll. 15–24, col. 2, l. 64–col. 3, l. 2, Fig. 2a; IPR2014-00260 Pet. 23–24, 33; IPR2014-00260 Ex. 1008 ¶¶ 19, 30–31. Magna does not provide persuasive evidence or explanation to counter Petitioner's explanation.

In view of these disclosures, we are persuaded that Kakinami would have suggested to a person of ordinary skill in the art the claimed arrangement of an imaging sensor "supported by a mounting structure fixedly attached to an interior surface of the vehicle windshield so as to physically fixedly position said imaging sensor within the interior cabin of the vehicle and close to and rearward of the windshield." Given this and Kenue's disclosure of mounting an imaging sensor "at the upper center of the windshield" (Ex. 1004, col. 2, ll. 28–32), we are persuaded that the

claimed mounting of the imaging sensor would have been obvious in view of Kenue and Kakinami. *See KSR*, 550 U.S. at 421 ("A person of ordinary skill is also a person of ordinary creativity, not an automaton.").

Even if Kakinami did not suggest an imaging sensor supported by a mounting structure fixedly attached to an interior surface of a vehicle windshield, TRW presents other evidence that provides an alternate reason the claimed mounting arrangement would have been obvious in view of Kenue and Kakinami. TRW argues that it was common as of the effective filing date of the challenged claims to adhere rearview mirror assemblies to windshields (IPR2014-00260 Pet. 22), and Dr. Miller testifies that "[i]t was commonplace to adhere rearview mirrors to windshields" (IPR2014-00260 Ex. 1008 ¶ 19). We agree with Magna that these assertions, even if accurate, do not establish that it would be inherent to adhere a rearview mirror assembly to a windshield. *See* PO Resp. 24–25.

The lack of inherency, however, does not nullify TRW's assertion that attachment was commonplace. Indeed, Magna provides no evidence or explanation persuading us that TRW is wrong about its assertion that adhering rearview mirrors to windshields was commonplace. Regarding Magna's assertion that the claim refers to mounting an imaging sensor, not a rearview mirror assembly, both Kenue and Kakinami disclose an imaging sensor mounted in a rearview mirror assembly. *See, e.g.*, Ex. 1005, Abst.; Ex. 1004, col. 2, ll. 28–32. Kakinami's disclosure of an imaging sensor mounted in a rearview mirror assembly and Kenue's disclosure of mounting an imaging sensor at a windshield provide persuasive evidence that it was commonplace to adhere rearview mirror assemblies to windshields.

e. Conclusion

After considering TRW's and Magna's positions, as well as their supporting evidence, we determine that TRW has shown, by a preponderance of the evidence, that claims 1 and 35 are unpatentable under 35 U.S.C. § 103(a) as obvious over the combination of Kenue and Kakinami.

4. Claim 17

Claim 17 depends from claim 1, and further requires, *inter alia*, that "object recognition is enhanced by comparing identified objects over successive frames." TRW asserts that Kenue teaches this limitation. IPR2014-00260 Pet. 31. Specifically, TRW asserts that Kenue teaches this limitation by disclosing that its template matching algorithm compares "the position of each marker centroid with that of the previous frame." *Id.*; Ex. 1004, col. 5, ll. 19–21. TRW states that "[t]he identification of lane boundaries is thereby enhanced where the processing provides a least squares analysis to ascertain lane boundaries, even where some markers may be missing." IPR2014-00260 Pet. 31–32. We have reviewed the evidence and arguments presented in the Petition and determine that TRW has demonstrated, by a preponderance of the evidence, that claim 17 would have been obvious in view of Kenue and Kakinami. IPR2014-00260 Pet. 17–32; IPR2014-00260 Ex. 1008 ¶¶ 13–19, 26–27.

Magna argues that Kenue does not teach the above limitation of claim 17. PO Resp. 29–31. Magna asserts that "[a] system cannot *enhance recognition of objects* (as claimed) when the system only provides an *estimated* marker location when no object is found. . . . This is because it is an estimation of lane markers ahead of the vehicle, and not an enhancement

of object recognition." *Id.* at 30–31 (citing Ex. 2032 ¶¶ 88–89). Magna concludes that Kenue compares the position of lane markers to estimate lane boundaries, not to enhance recognition of lane markers. *Id.* at 30–31.

TRW responds that claim 17 does not require "any *specific type* of comparison or enhancement, so any type of comparison will suffice." Reply 11. TRW points to Kenue's disclosure that "[t]he determination of expected marker position <72> involves comparing the position of each marker centroid with that of the previous frame." Ex. 1004, col. 5, ll. 14–21; Reply 11. TRW notes that Kenue discloses using this comparison to reject certain markers, eliminating spurious markers. Reply 11 (citing Ex. 1004, col. 5, ll. 25–28).

TRW persuades us that Kenue teaches the "object recognition is enhanced by comparing identified objects over successive frames" limitation of claim 17. We are persuaded that Kenue teaches using the comparison of images over successive frames not only in estimating lane boundaries, as Magna argues, but also in enhancing recognition of lane markers, including rejecting spurious lane markers, as TRW argues. *See* Ex. 1004, col. 5, ll. 19–34; Reply 11. Indeed, regarding Kenue's disclosure of comparing identified objects over successive frames, Magna states that "[a]t best what it is doing is making it easier to find a lane marker but not enhancing even the detection of that lane marker. It is enhancing maybe a search area, but that's not enhancing based on captured image data identification of an object." Tr. 43, l. 24–44, l. 3. Magna does not provide persuasive reasoning or evidence to demonstrate that making it easier to find lane markers, which would help the system accurately recognize lane markers by looking for

them where they are likely to appear, does not enhance object recognition (i.e., recognition of lane markers).

After considering TRW's and Magna's positions, as well as their supporting evidence, we determine that TRW has shown, by a preponderance of the evidence, that claim 17 is unpatentable under 35 U.S.C. § 103(a) as obvious over the combination of Kenue and Kakinami.

5. Claims 14, 16, 21–23, 39, 42, and 43

Claims 14, 16, and 21–23 depend, directly or indirectly, from independent claim 1. Claims 39, 42, and 43 depend, directly or indirectly, from independent claim 35. TRW explains how a combination of Kenue and Kakinami discloses or suggests the claimed subject matter of each of dependent claims 14, 16, 21–23, 39, 42, and 43, and also relies on the Declarations of Dr. Miller. IPR2014-00260 Pet. 30–31, 33–36, 44–46; IPR2014-00260 Ex. 1008; IPR2014-00264 Pet. 53–56; IPR2014-00264 Ex. 1010. Aside from the above-discussed arguments related to independent claims 1 and 35, Magna does not dispute TRW's assertions regarding claims 14, 16, 21–23, 39, 42, and 43. After considering the arguments and evidence advanced by TRW, we determine that TRW has shown, by a preponderance of the evidence, that claims 14, 16, 21–23, 39, 42, and 43 are unpatentable under 35 U.S.C. § 103(a) as obvious over the combination of Kenue and Kakinami. IPR2014-00260 Pet. 17–31, 36–42, 44–46; IPR2014-00260 Ex. 1008 ¶¶ 13–21, 24–25, 30–37, 42–45.

C. Obviousness of Claims 2, 4, 24, 27–30, 32, 34, 36, 45, and 49–52 over Kenue, Kakinami, and Vellacott

TRW asserts that claims 2, 4, 24, 27–30, 32, 34, 36, 45, and 49–52 are unpatentable under 35 U.S.C. § 103(a) as obvious over the combination of Kenue, Kakinami, and Vellacott. Pet. 16–44; IPR2014-00264 Pet. 39–54;

Reply 1–14. TRW explains how a combination of Kenue, Kakinami, and Vellacott allegedly discloses or suggests the claimed subject matter, and also relies on the Declarations of Dr. Miller. IPR2014-00256 Ex. 1012; IPR2014-00264 Ex. 1010. Magna disagrees with TRW's assertions and relies on the Declaration of Dr. Turk. PO Resp. 1–4, 8–31, 33–38 (citing Ex. 2032). We have reviewed the evidence and arguments presented in the Petitions and determine that TRW has demonstrated, by a preponderance of the evidence, that all of the limitations of each of claims 2, 4, 24, 27–30, 32, 34, 36, 45, and 49–52, considered as a whole, would have been obvious in view of Kenue, Kakinami, and Vellacott. Pet. 16–44; Ex. 1011 ¶¶ 13–24, 27–34, 37–40; IPR2014-00264 Pet. 39–54; IPR2014-00264 Ex. 1010 ¶¶ 13–18, 23–34.

1. Overview of Vellacott

Vellacott discloses that CCD image sensors have certain drawbacks, and that VLSI Vision Ltd (VVL) developed an image sensor using a CMOS chip. Ex. 1006, 1. Vellacott states that "because of the low power consumption of CMOS," the CMOS image sensor "consumes just 200 mW, compared with the 1W typical of CCDs." *Id.* at 2. Subsequently, because "the technology remained inaccessible to applications developers[,] . . . VVL then set out to produce a completely programmable machine-vision system," which resulted in the "imputer." *Id.* at 3. The imputer includes a CMOS image sensor. *See id.* at 4. Vellacott discloses the imputer housed in a rear-view mirror assembly and programmed to recognize headlights and taillights in the field of view. *Id.*

2. Combining the Teachings of Vellacott with Kenue

The parties dispute whether it would have been obvious to combine the teachings of Vellacott with those of Kenue. TRW asserts that Kenue discloses most of the limitations of claims 2, 4, 24, 27–30, 32, 34, 36, 45, and 49–52. Pet. 17–44; IPR2014-00264 Pet. 39–54. TRW cites Vellacott for the proposition that it would have been obvious to modify Kenue's system in such a manner that it would meet the claim limitation "at least one of (i) said array of light sensing photosensor elements and (ii) at least a portion of said logic and control circuit is formed on said semiconductor substrate as a CMOS device," as recited in claims 2, 24, and 36. Pet. 28, 30–31; IPR2014-00264 Pet. 41. TRW similarly cites Vellacott for the proposition that it would have been obvious to modify Kenue's system in such a manner that it would meet the limitation of claim 45 reciting "said imaging sensor comprising a two-dimensional array of light sensing photosensor elements formed on a semiconductor substrate as a CMOS device." IPR2014-00264 Pet. 42–43.

TRW argues that "Vellacott discloses that single-chip CMOS sensors are advantageously lower-power substitutes for CCD sensor[s] when used for in-vehicle imaging." Pet. 28, 31–32; IPR2014-00264 Pet. 41–42. In view of this, TRW asserts that "Vellacott is properly combinable with Kenue and Kakinami where a person of ordinary skill in the art would recognize these well-known advantages and so also [would] be motivated to choose to use a camera that contains a CMOS photosensor array." Pet. 28, 32; IPR2014-00264 Pet. 41, 43.

Magna asserts that TRW does not demonstrate that it would have been obvious to combine the teachings of Vellacott with those of Kenue. PO

Resp. 35–38. Magna argues that TRW focuses on benefits of CMOS technology disclosed in Vellacott, while improperly neglecting to consider "the technical limitations taught by Vellacott." *Id.* at 35 (citing Ex. 2032 ¶ 98). Specifically, Magna argues that "Vellacott discloses that CMOS technology at the time suffered from limitations such as processing power and sensor resolution." *Id.* at 36 (citing Ex. 1006, 3; Ex. 2032 ¶ 99). Magna argues that TRW does not discuss these aspects of Vellacott's disclosure and, therefore, TRW's obviousness analysis amounts to "a hindsight-guided combination of elements." *Id.* (citing Ex. 2032 ¶¶ 99–101).

Magna further argues that TRW's obviousness analysis does not account for the general state of the art at the time. *Id*. Specifically, Magna and Dr. Turk assert that TRW does not account for difficulties presented by the "rolling shutter effect" of CMOS technology. *Id.* at 36–38; Ex. 2032 ¶¶ 102–107. Magna and Dr. Turk assert that the rolling shutter effect results from exposing each row of pixels in an imaging sensor at different times, and that this can result in image distortion in applications like Kenue's where the imaging sensor is moving. PO Resp. 36–38; Ex. 2032 ¶¶ 103–106. Magna and Dr. Turk further assert that Kenue does not disclose a way to deal with the rolling shutter effect, and that limitations stemming from the rolling shutter effect would have made it undesirable to use CMOS technology in Kenue's system. PO Resp. 38; Ex. 2032 ¶ 107.

In response, TRW argues that Dr. Turk admits the rolling shutter effect was well understood by the time of the '664 patent. Reply 12–13 (citing Ex. 1013, 163, l. 22–165, l. 5). TRW also argues that Dr. Turk is only speculating about the drawbacks of the rolling shutter effect, noting that Dr. Turk testified that the rolling shutter effect "may well have resulted in

nontrivial technical issues." *Id.* at 13 (citing Ex. 1013, 163, ll. 1–6). TRW asserts that "[t]his is not a definite opinion of inoperability." *Id.* TRW further argues that Dr. Miller provides calculations demonstrating that "persons of ordinary skill in the art would have been able to understand that the rolling shutter effect is immaterial." *Id.* at 13–14 (citing IPR2014-00256 Ex. 1012 ¶¶ 19–21).

As Magna notes, when we consider whether it would have been obvious to modify a reference, "the benefits, both lost and gained, should be weighed against one another." PO Resp. 35 (citing *Winner Int'l Royalty Corp. v. Wang*, 202 F.3d 1340, 1349 n.8 (Fed. Cir 2000)). Accordingly, "[t]he fact that the motivating benefit comes at the expense of another benefit . . . should not nullify its use as a basis to modify the disclosure of one reference with the teachings of another." *Winner*, 202 F.3d at 1349 n.8. TRW identifies a clear benefit of modifying Kenue's system to use a CMOS sensor in lieu of a CCD censor when it observes that Vellacott discloses that a CMOS image sensor is a lower-power substitute for a CCD imaging sensor. Pet. 28, 31–32; IPR2014-00264 Pet. 41–43. The assertions of Magna and Dr. Turk regarding potential technical challenges associated with performing such a modification do not persuade us that the benefit identified by TRW would be nullified. Accordingly, TRW persuades us that it would have been obvious to modify Kenue to use a CMOS imaging sensor, as taught by Vellacott. *See Magna*, 2015 WL 2110525 at *4 (holding that replacement of CCD camera with CMOS camera in a similar context was "nothing more 'than the predictable use of prior art elements'").

3. Claims 2, 4, 24, 27–29, 32, 34, 36, 45, and 49–52

As noted above, we have reviewed the evidence and arguments presented in the Petitions and determine that TRW has demonstrated, by a preponderance of the evidence, that all of the limitations of each of claims 2, 4, 24, 27–29, 32, 34, 36, 45, and 49–52, considered as a whole, would have been obvious in view of Kenue, Kakinami, and Vellacott. Pet. 16–44; Ex. 1011 ¶¶ 13–24, 27–34, 37–40; IPR2014-00264 Pet. 39–54; IPR2014-00264 Ex. 1010 ¶¶ 13–18, 23–34. In addition to disputing whether it would have been obvious to combine the teachings of the references, the parties dispute whether the cited references teach certain claim limitations required by claims 2, 4, 24, 27–29, 32, 34, 36, 45, and 49–52. In particular, the parties present arguments that focus on four aspects of these claims: (1) "detecting objects by processing said image data to identify objects" (recited in claim 1)[4] and "detects objects by processing said image data to identify objects" (recited in claims 35[5] and 45); (2) "detects objects . . . present in the field of view of said imaging sensor" (recited in claims 1 and 24) and "detects objects present in the field of view of said imaging sensor" (recited in claim 45); (3) "said imaging sensor comprising a two-dimensional array of light sensing photosensor elements" (recited in claims 1, 24, 35, and 45); and (4) "said imaging sensor being supported by a mounting structure fixedly attached to an interior surface of the vehicle windshield" (recited in claims 1, 24, 35, and 45).

---

[4] Limitations recited in claim 1 are required by claims 2 and 4 because they depend from claim 1.
[5] Limitations recited in claim 35 are required by claim 36 because it depends from claim 35.

With respect to these issues, the parties' arguments are substantively the same, and raise the same issues, as the four issues discussed in Section II.B.3 above, with respect to claims 1 and 35. For the reasons discussed in Section II.B.3, we find TRW's arguments regarding these issues more persuasive than Magna's. After considering TRW's and Magna's positions, as well as their supporting evidence, we determine that TRW has shown, by a preponderance of the evidence, that claims 2, 4, 24, 27–29, 32, 34, 36, 45, and 49–52 are unpatentable under 35 U.S.C. § 103(a) as obvious over the combination of Kenue, Kakinami, and Vellacott.

4. Claim 30

As noted above, we have reviewed the evidence and arguments presented in the Petitions and determine that TRW has demonstrated, by a preponderance of the evidence, that claim 30 would have been obvious in view of Kenue, Kakinami, and Vellacott. Pet. 41; Ex. 1011 ¶¶ 33–34; IPR2014-00264 Pet. 39–54; IPR2014-00264 Ex. 1010 ¶¶ 13–18, 23–34. Claim 30 depends from claim 24 and further requires that "object recognition is enhanced by comparing identified objects over successive frames." TRW asserts that Kenue teaches this limitation, and Magna disputes this assertion. Pet. 41; Reply 11; PO Resp. 29–31. The parties present substantially the same arguments and raise the same issues as with the same limitation of claim 17, discussed in Section II.B.4 above. For the reasons discussed in Section II.B.4, we find TRW's arguments more persuasive than Magna's. After considering TRW's and Magna's positions, as well as their supporting evidence, we determine that TRW has shown, by a preponderance of the evidence, that claim 30 is unpatentable under 35

U.S.C. § 103(a) as obvious over the combination of Kenue, Kakinami, and Vellacott.

D. Obviousness of Claims 13 and 20 over Kenue, Kakinami, and Yanagawa

TRW asserts that claims 13 and 20 are unpatentable under 35 U.S.C. § 103(a) as obvious over the combination of Kenue, Kakinami, and Vellacott. Pet. 44–47; Reply 1–12, 14–15. TRW explains how a combination of Kenue, Kakinami, and Yanagawa allegedly discloses or suggests the claimed subject matter, and also relies on the Declarations of Dr. Miller. IPR2014-00256 Exs. 1011, 1012. Magna disagrees with TRW's assertions and relies on the Declaration of Dr. Turk. PO Resp. 1–4, 8–29, 31–34, 38–46 (citing Ex. 2032). We have reviewed the evidence and arguments presented in the Petition and determine that TRW has demonstrated, by a preponderance of the evidence, that all of the limitations of each of claims 13 and 20, considered as a whole, would have been obvious in view of Kenue, Kakinami, and Yanagawa. Pet. 45–47; Ex. 1011 ¶¶ 13–18, 41–44.

1. Overview of Yanagawa

Yanagawa discloses a device for recognizing taillights of a vehicle travelling ahead, as well as recognizing headlights of an oncoming vehicle. IPR2014-00256, Ex. 1007, 7.[6] The device calculates and displays the interrelationship with the vehicle ahead. *Id.* The device can control automatically the headlights of the vehicle that includes the device. *See id.*

[6] In our citations to Yanagawa, the page numbers refer to the page number of the exhibit as a whole, i.e., the page number identified in the format "1007-x," where x is the page number.

The device recognizes headlights and taillights "from color features." *Id.* at 8. Yanagawa further discloses that "[t]he distance from and the speed relative to a vehicle traveling ahead can also be calculated based on taillight recognition, and a warning can therefore be issued to the driver in states such as when there is a risk of a rear-end collision." *Id.*

2. Combining the teachings of Yanagawa with Kenue

The parties dispute whether it would have been obvious to combine the teachings of Yanagawa with those of Kenue. TRW relies on Yanagawa to address claim 13's limitation "wherein said at least one control output controls as a function of a speed of the vehicle" and claim 20's limitation "wherein said detection of objects comprises identification by spectral signature." Pet. 45–47. TRW contends that Yanagawa discloses technology that controls headlight switching or the risk of collision as a function of speed of the vehicle, and includes detection of objects that comprises identification by spectral signature. *Id.* at 45–46. TRW argues that "Yanagawa is properly combinable with Kenue and Kakinami where these patents are related in the field of computer vision and a person of ordinary skill in the art would want to provide Kenue with the additional design option of speed-based collision avoidance." *Id.* at 46.

Magna argues a person of ordinary skill in the art would not have combined the disclosure of Kenue with that of Yanagawa. PO Resp. 38–46. In support of this contention, Magna and Dr. Turk cite "increased cost and complexity" of Yanagawa's color camera as undermining need and motivation to use a color camera. *Id.* at 39; Ex. 2032 ¶ 113. Magna and Dr. Turk also assert that modifying Kenue's system with Yanagawa's disclosure would require longer processing times. PO Resp. 43; Ex. 2032 ¶ 125.

Magna and Dr. Turk assert that modifying Kenue to implement the teachings of Yanagawa would require reprogramming it to search different regions and recognize taillights, which would "substantially reconstruct Kenue's entire system and change its basic principle of operation." PO Resp. 42–43; Ex. 2032 ¶¶ 120–22. Magna and Dr. Turk also assert that "[s]uch a system, also, would be unpredictable in terms of its functionality and operability," and that TRW does not provide evidence of how a person of ordinary skill in the art "would deal with this modification, how the system would function, or even if the system would work." PO Resp. 43; Ex. 2032 ¶¶ 123–24.

With respect to claim 20, Magna argues that "TRW's Petition fails to articulate a reason as to why the invention of claim 20 would have been obvious." PO Resp. 39 (citing Pet. 46–47). Magna further argues that Dr. Miller "points in his Claim Chart to Yanagawa but also fails to articulate any reason why a [person of ordinary skill in the art] would be motivated to combine Yanagawa with Kenue." *Id.* (citing IPR2014-00256 Ex. 1011 ¶¶ 43–44; Ex. 2032 ¶¶ 110–111).

Magna and Dr. Turk also argue that "[t]he alleged combined system of Kenue and Yanagawa without the reorganization of Kenue would have two image processors: one performing the function of Kenue and the other performing the function of Yanagawa." PO Resp. 45; Ex. 2032 ¶ 128. Magna and Dr. Turk assert that such a system would not meet the limitations of claims 13 and 20, which Magna and Dr. Turk assert require using a single processor to perform all of the claimed functions. PO Resp. 45–46.

TRW responds that Kenue and Yanagawa pertain to the same field of endeavor, asserting that Yanagawa suggests a desire to expand the range of

safe driving applications, and that Kenue's system relates to collision warning and collision avoidance. Reply 14 (citing Ex. 1007, 11). TRW further argues that combining Yanagawa with Kenue advances Yanagawa's stated desire of expanding safe driving applications. *Id.* TRW argues that "Yanagawa suggests the combination because it is desirable to 'issue various warning actions for safe driving, thereby effectively expanding the range of applications for safe driving.'" *Id.* (citing Ex. 1007, 1). TRW further asserts that Kenue suggests a need for color processing because Kenue discloses that "[t]his correlation procedure will not yield any match for yellow or faded lane markers." *Id.* at 15 (citing ex. 1004, col. 4, ll. 68–69).

TRW presents sound reasoning and evidence that a person of ordinary skill in the art would have had reason to combine the teachings of Yanagawa with those of Kenue. In view of TRW's observations that Kenue discloses that its system relates to a core capability for collision avoidance, and that Yanagawa discloses a "safe driving warning system," we find persuasive TRW's argument that "Yanagawa and Kenue . . . pertain to the same field of endeavor." Reply 14. Additionally, we agree with TRW that Yanagawa's statement that its system can "issue various warning actions for safe driving, thereby effectively expanding the range of applications for safe driving" provides reason to combine the teachings of the references. *Id.*; Ex. 1007, 11. In particular, Yanagawa's disclosure provides reason to combine its teachings with Kenue's in order to "provide Kenue with the additional design option of speed-based collision avoidance," as TRW argues. Pet. 46. Because combining Yanagawa's teachings with Kenue's would provide an additional way for Kenue's system to enhance driving safety, combining the references would provide a substantial benefit. In addition to this, as TRW

notes, Kenue's disclosure that its "correlation procedure will not yield any match for yellow or faded lane markers" provides a reason to combine Yanagawa's teachings of color image processing with Kenue's teachings. Reply 15 (citing ex. 1004, col. 4, ll. 68–69). These reasons support both TRW's challenge of claim 13 and its challenge of claim 20.

We are not persuaded that modifying Kenue's system with Yanagawa's teachings would require substantial reconstruction that changes Kenue's basic principle of operation. Magna does not provide persuasive evidence that black and white image-processing forms part of Kenue's basic principle of operation, which is detecting lane markers by template matching or a Hough transform. Even assuming, *arguendo*, that changing from black and white to color image-processing would increase cost and complexity, as Magna argues, this does not persuade us that doing so would change Kenue's basic principle of operation. *See* PO Resp. 39. Additionally, Magna does not provide persuasive evidence that programming Kenue's system to include Yanagawa's alarm would change Kenue's basic principle of operation. *See id.* at 42–43. Consistent with Dr. Turk's testimony, it appears self-evident that modifying Kenue's system to include Yanagawa's alarm feature would require adding programming to perform additional image-processing, such as identifying taillights. *See* Ex. 2032 ¶¶ 119–122. But we are not persuaded that adding such additional image-processing would require necessarily removing any of the image-processing that Kenue discloses using to identify lane markers and obstacles.

We also are unpersuaded by Magna's and Dr. Turk's assertion that a system combining Yanagawa's alarm with Kenue's system "would be unpredictable in terms of its functionality." *See* PO Resp. 43; Ex. 2032

¶ 123. Neither Magna nor Dr. Turk explains why such a system would be unpredictable, particularly given the similar teachings of the references and the level of ordinary skill in the art. *See id.*

We also find unpersuasive Magna's argument that unless one reorganized Kenue's system, combining Kenue with Yanagawa would involve using two separate processors to perform the functions disclosed by Kenue and Yanagawa. *See* PO Resp. 45. "The test for obviousness is not whether the features of a secondary reference may be bodily incorporated into the structure of the primary reference." *In re Keller*, 642 F.2d 413, 425 (CCPA 1981). As noted above, "[a] person of ordinary skill is also a person of ordinary creativity, not an automaton." *KSR*, 550 U.S. at 421. Additionally, that combining the teachings of Yanagawa with Kenue may involve some reconfiguration of Kenue, within the skill of an ordinarily skilled artisan, does not establish that it would not have been obvious to do so. *See In re Mouttet*, 686 F.3d 1322, 1332 (Fed. Cir. 2012).

In sum, Magna's arguments relate to potential increased cost and complexity, potential increased processing time, and potential technical challenges associated with combining Yanagawa's alarm with Kenue's system. We are not persuaded that these alleged disadvantages of combining Yanagawa and Kenue negate the benefit of providing Kenue's system with an additional way to increase driving safety, as suggested by Yanagawa. Accordingly, TRW persuades us that a person of ordinary skill in the art would have had reason to combine the teachings of Yanagawa with Kenue.

3. Disputed claim limitations

a. Limitations recited in claim 1 and required by claims 13 and 20

Claims 13 and 20 depend from independent claim 1, such that each of claims 13 and 20 requires all of the limitations of claim 1. As discussed in Section II.B.3 above, TRW asserts that claim 1 is unpatentable as obvious over Kenue and Kakinami, and Magna disputes TRW's assertions regarding certain limitations of claim 1. With respect to these disputes, as explained in Section II.B.3, we find TRW's evidence and arguments more persuasive than Magna's.

b. Claim 13—"said at least one control output controls as a function of a speed of the vehicle"

TRW contends that Yanagawa teaches a control output that "controls as a function of a speed of the vehicle," as required by claim 13. Pet. 45–46. TRW argues that Yanagawa discloses a control output that "controls at least one of the headlight switching or the risk of collision based in part upon the vehicle speed." *Id.* at 46. In connection with this, TRW cites Yanagawa's disclosure that an "executing part" of its system "executes tasks for controlling the headlight beams or issuing a warning to the driver based on the recognition information, vehicle speed information, and headlight information." Pet. 45–46 (citing Ex. 1007, 9). TRW also cites Yanagawa's disclosure that "[t]he distance from and the speed relative to a vehicle travelling ahead can also be calculated based on taillight recognition, and a warning can therefore be issued to the driver in states such as when there is risk of a rear-end collision." *Id.* at 45 (citing Ex. 1007, 8).

Magna contends that Yanagawa does not teach this limitation of claim 13, arguing that:

> Yanagawa merely calculates speed and distance, and, in an amorphous way, makes a prediction and may sound a warning or the like based on these data. ([Ex. 2032], ¶ 93.) This neither discloses nor suggests claim 13 of the ’664 patent, which requires a control output that controls *as a function of a speed* of the vehicle and where the control output is responsive to detection of objects. ([Ex. 2032], ¶ 94.)

PO Resp. 32. Magna and Dr. Turk also contend that a person of ordinary skill in the art would not have known how to provide a control output as a function of speed based on Yanagawa’s teaching. *Id.*; Ex. 2032 ¶ 95. Magna and Dr. Turk base this contention on an assertion that Yanagawa does not explain how to predict a rear-end collision based on speed data. *Id.*

We are persuaded that Yanagawa’s disclosure of providing a warning in states involving a risk of rear-end collision teaches a control output that “controls as a function of a speed of the vehicle.” Facially, Yanagawa’s disclosure of using vehicle speed in identifying a risk of rear-end collision and issuing a warning constitutes a control output controlling the warning device as a function of a speed of the vehicle. *See* IPR2014-00256 Ex. 1007, 8–9, 11; Pet. 45–46; Reply 12. Additionally, this control output is “responsive to detection of objects,” as recited in claim 1, because Yanagawa discloses that the act of issuing a warning stems from recognizing taillights and recognizing a risk of rear-end collision based on the taillight recognition. *See* IPR2014-00256 Ex. 1007, 8–11; Pet. 45–46; Reply 12. Accordingly, the evidence and arguments presented by TRW persuade us that Yanagawa teaches this limitation of claim 13, and Magna does not provide evidence or argument that persuades us otherwise. Additionally, as discussed in detail in Section II.D.2 above, TRW provides sound reasoning and evidence that it would been obvious to combine the disclosure of Kenue

with Yanagawa, and Magna does not persuade us otherwise with its argument that Yanagawa does not explain how to predict a rear-end collision based on speed data. *See KSR*, 550 U.S. at 421 ("A person of ordinary skill is also a person of ordinary creativity, not an automaton.").

c. Conclusion

After considering TRW's and Magna's positions, as well as their supporting evidence, we determine that TRW has shown, by a preponderance of the evidence, that claims 13 and 20 are unpatentable under 35 U.S.C. § 103(a) as obvious over the combination of Kenue, Kakinami, and Vellacott.

III. CONCLUSION

TRW has shown, by a preponderance of the evidence, that claims 1, 14, 16, 17, 21–23, 35, 39, 42, and 43 of the '664 patent would have been obvious over the combination of Kenue and Kakinami.

TRW has shown, by a preponderance of the evidence, that claims 2, 4, 24, 27–30, 32, 34, 36, 45, and 49–52 would have been obvious over the combination of Kenue, Kakinami, and Vellacott.

TRW has shown, by a preponderance of the evidence, that claims 13 and 20 would have been obvious over the combination of Kenue, Kakinami, and Yanagawa.

IV. ORDER

In consideration of the foregoing, it is

ORDERED that claims 1, 2, 4, 13, 14, 16, 17, 20–24, 27–30, 32, 34–36, 39, 42, 43, 45, and 49–52 of the ’664 patent are determined to be *unpatentable*; and

FURTHER ORDERED that, because this is a Final Written Decision, parties to the proceeding seeking judicial review of the decision must comply with the notice and service requirements of 37 C.F.R. § 90.2.

PETITIONER:

Josh C. Snider
Timothy Sendek
A. Justin Poplin
LATHROP & GAGE LLP
JSnider@lathropgage.com
tsendek@lathropgage.com
jpoplin@lathropgage.com
patent@lathropgage.com

PATENT OWNER:

Timothy A. Flory
Terence J. Linn
GARDNER, LINN, BURKHART & FLORY, LLP
Flory@glbf.com
linn@glbf.com

David K.S. Cornwell
STERNE, KESSLER, GOLDSTEIN & FOX PLLC
davidc-PTAB@skgf.com