Trials@uspto.gov
571-272-7822

Paper No.11
Entered: December 18, 2015

UNITED STATES PATENT AND TRADEMARK OFFICE

BEFORE THE PATENT TRIAL AND APPEAL BOARD

LG DISPLAY CO., LTD., and LG ELECTRONICS, INC.,
Petitioner,

v.

INNOVATIVE DISPLAY TECHNOLOGIES LLC,
Patent Owner.

Case IPR2014-01096
Patent 7,537,370 B2

Before THOMAS L. GIANNETTI, MIRIAM L. QUINN, and BEVERLY M. BUNTING, *Administrative Patent Judges*.

GIANNETTI, *Administrative Patent Judge.*

FINAL WRITTEN DECISION
35 U.S.C. § 328(a) and 37 C.F.R. § 42.73

LG Display Co., Ltd. filed a Corrected Petition[1] pursuant to 35 U.S.C. §§ 311–319 seeking to institute an *inter partes* review of claims 1, 4, 8, 13, 15, 27, 29, and 47 of U.S. Patent No. 7,537,370 ("the '370 patent"). Paper 4 ("Pet."). Innovative Display Technologies LLC ("Patent Owner") filed a Preliminary Response. Paper 9 ("Prelim. Resp."). Applying the standard set forth in 35 U.S.C. § 314(a), the Board instituted an *inter partes* review of claims 15 and 27 and denied the request as to the other challenged claims. Paper 11 ("Institution Decision"). LG Display Co. Ltd.'s request for rehearing as to certain claims was denied. Papers 15, 21. Following institution, the proceeding was joined with IPR2015-00493, filed by LG Electronics, Inc., challenging the same claims of the '370 patent on the same grounds as in this proceeding. For the purpose of this Decision, we will refer to LG Display Co., Ltd. and LG Electronics, Inc., jointly, as "Petitioner."

During the trial, Patent Owner filed a Patent Owner Response (Paper 24, "PO Resp."), and Petitioner filed a Reply to the Patent Owner Response (Paper 30, "Reply"). An oral hearing was held on September 21, 2015, and a copy of the transcript has been made part of the record. Paper 39 ("Hearing Tr.").

We have jurisdiction under 35 U.S.C. § 6(c). This Decision is a Final Written Decision under 35 U.S.C. § 318(a) as to the patentability of the claims on which we instituted trial. Based on the record before us, Petitioner has shown, by a preponderance of the evidence, that claims 15 and 27 of the '370 patent are unpatentable under 35 U.S.C. § 103(a).

[1] In this proceeding we will refer to the Corrected Petition as "the Petition."

I. BACKGROUND

A. The ’370 patent (Ex. 1001)

The ’370 patent is entitled “Light Emitting Panel Assemblies.” The Abstract describes the subject matter as follows:

> Light emitting panel assemblies include an optical panel member having a pattern of light extracting deformities on or in one or both sides to cause light to be emitted in a predetermined output distribution. The pattern of light extracting deformities on or in one side may have two or more different types or shapes of deformities and at least one of the types or shapes may vary along the length or width of the panel member. Where the light extracting deformities are on or in both sides, at least some of the deformities on or in one side may be of a different type or shape or vary in a different way or manner than the deformities on or in the other side.

Ex. 1001, Abstract.

B. Challenged Claims

Claims 15 and 27 of the ’370 patent are at issue in this trial. They are reproduced here with emphasis added to certain elements that will be discussed *infra*.

> 15. A light emitting panel assembly comprising at least one light source, an optical panel member having at least one input edge for receiving light from the at least one light source, the panel member having front and back sides and a greater cross sectional width than thickness, at least one of the sides having a pattern of light extracting deformities that are projections or depressions on or in the at least one side to cause light to be emitted from the panel member in a predetermined output distribution, *where the pattern of light extracting deformities on or in the at least one side has at least two different types of light extracting deformities* and at least one of the types of deformities on or in the at least one side varies along at least one of the length and width of the panel member,

> and at least one film, sheet or substrate overlying at least a portion of one of the sides of the panel member to change the output distribution of the emitted light such that the light will pass through a liquid crystal display with low loss.
>
> 27. A light emitting panel assembly comprising at least one light source, an optical panel member having at least one input edge for receiving light from the at least one light source, the panel member having front and back sides and a greater cross sectional width than thickness, at least one of the sides having a pattern of light extracting deformities that are projections or depressions on or in the at least one side to cause light to be emitted from the panel member in a predetermined output distribution, *where the pattern of light extracting deformities on or in the at least one side has at least two different types of light extracting deformities* and at least one of the types of deformities on or in the at least one side varies alone at least one of the length and width of the panel member, wherein *the panel member has a transition region between the at least one input edge and the patterns of light extracting deformities to allow the light from the at least one light source to mix and spread,* and at least one side of the transition region contains *optical elements* for reflecting or refracting light from the at least one light source.

C. Related Proceedings

Patent Owner states that it has asserted infringement by Petitioner of the ’370 patent in the following proceeding: Delaware Display Group LLC et al. v. LG Electronics, Inc. et al., No. 1:13-cv-02109 (D. Del., filed Dec. 31, 2013). Paper 7.

Patent Owner identifies numerous other proceedings in which it has alleged infringement of the ’370 patent. *See* Paper 7 for a listing.

There is one other pending petition for *inter partes* review of the ’370 patent: IPR2015-01867, filed September 11, 2015. Another such petition

(IPR2015-00753) was filed February 17, 2015. That case was terminated by a settlement before the Board reached a decision on institution.

D. Claim Construction

The Board interprets claims of an unexpired patent using the broadest reasonable construction in light of the specification of the patent in which they appear. 37 C.F.R. § 42.100(b); *see also* Office Patent Trial Practice Guide, 77 Fed. Reg. 48,756, 48,766 (Aug. 14, 2012). Because the ’370 patent expired during the trial, however, we must consider whether this has an effect on our determination. Patent Owner contends that in view of the expiration, the Board must follow the *Phillips* standard. *Phillips v. AWH Corp.*, 415 F.3d 1303 (Fed. Cir. 2005) (en banc). Patent Owner did not bring the expiration of the patent to the attention of the Board until the final hearing, even though the ’370 patent expired in June 2015, after Patent Owner filed its Response but before Petitioner’s Reply was filed. Hearing Tr. 44:17–45:19.

Putting aside the untimeliness of its argument, Patent Owner has not persuaded us that applying the *Phillips* standard would affect our determination of this case. In fact, throughout this proceeding, Patent Owner has taken no position on claim construction. Prelim. Resp. 4; PO Resp. 6. The only claim term the Board construed in its Institution Decision is the term “deformities,” appearing in both challenged claims. Paper 11, 4. It was Petitioner who asserted that the ’370 patent “expressly defines” the term to mean “any change in the shape or geometry of the panel surface and/or coating or surface treatment that causes a portion of light to be emitted.” Pet. 7 (citing Ex. 1001, col. 4, ll. 36–40). Patent Owner did not oppose that construction. Hearing Tr. 45:20–25. In fact, Patent Owner

pointed out that the construction of "deformities" proffered by Petitioner was agreed to and adopted by the district court. PO Resp. 7; Hearing Tr. 47:7–15. Patent Owner's counsel agreed at the oral hearing that the expiration of the '370 patent has no impact on that construction. *Id*. at 47:1–18. Nor does Patent Owner seek any other particular constructions in light of the '370 patent's expiration. *Id.* at 46:9–19. In short, Patent Owner points to nothing that would change if the *Phillips* standard were applied.

In light of the foregoing, we see no reason to modify our previous construction of "deformities" based either on the expiration of the '370 patent or positions of the parties as developed during the trial, and adopt that construction for this Final Written Decision. Nor do we see the need to make any further constructions of the claims for the purposes of this decision that would be affected by the expiration of the '370 patent or the *Phillips* standard.

E. References

Petitioner relies on the following two references:[2]

Pristash	US 5,005,108	Apr. 2, 1991	Ex. 1006
Kobayashi	US 5,408,388	Apr. 18, 1995	Ex. 1008

Petitioner relies also on a Declaration of Michael J. Escuti, Ph.D. ("Escuti Decl."). Ex. 1004. Likewise, Patent Owner's Response (Paper 24) is accompanied by a Declaration of Mr. Kenneth Werner (Werner Decl."). Ex. 2005. Deposition transcripts for those witnesses have been entered in the record as Exhibits 1020 ("Werner Dep.") and 1021 ("Escuti Dep.").

[2] The references are ordered by exhibit number with effective dates asserted by Petitioner.

F. Grounds Asserted

We instituted trial on the following grounds:

References	Basis	Claims Challenged
Pristash	§ 103(a)[3]	15 and 27
Kobayashi and Pristash	§ 103(a)	15 and 27

II. ANALYSIS

A. Overview — Obviousness

Under 35 U.S.C. § 103(a), an invention is not patentable if the differences between the claimed subject matter and the prior art are such that the subject matter, as a whole, would have been obvious at the time the invention was made to a person having ordinary skill in the art to which said subject matter pertains. *KSR Int'l Co. v. Teleflex Inc.*, 550 U.S. 398, 406 (2007). The question of obviousness is resolved on the basis of underlying factual determinations including: (1) the scope and content of the prior art; (2) any differences between the claimed subject matter and the prior art; (3) the level of skill in the art; and, (4) where in evidence, so-called secondary considerations, including commercial success, long-felt but unsolved needs, failure of others, and unexpected results. *Graham v. John Deere Co.*, 383 U.S. 1, 17–18 (1966).

B. Asserted Obviousness Based On Pristash

1. Background

Petitioner contends that claims 15 and 27 would have been obvious over the teachings of Pristash. Pet. 10–14. In support of this contention,

[3] The Summary and Order appearing in our Institution Decision incorrectly identify this ground as anticipation. As is clear from the analysis provided and the responses of the parties, however, the basis for instituting trial was obviousness.

Petitioner provides detailed claim charts and expert testimony through the Escuti Declaration. Pet. 22–25; Escuti Decl. ¶¶ 67–70, 114–33. Through the claim charts and expert testimony, Petitioner asserts that Pristash discloses the challenged claims. Moreover, Petitioner contends that a person of ordinary skill "would have been motivated to combine elements of a particular embodiment [of Pristash] with other elements of other embodiments disclosed in Pristash for several reasons." Pet. 11. Those reasons are set forth in the Petition. *Id*. at 11–12.

In response, Patent Owner challenges the sufficiency of Petitioner's proofs in several respects that we will discuss *infra*. We note, however, that most of the claim elements are undisputed. Patent Owner challenges Petitioner's assertions only as to certain claim elements, and does not challenge Petitioner's presentation of the rationale to combine various embodiments of Pristash. We have considered Petitioner's proffered rationale in light of Pristash's description of various disclosed embodiments as alternatives. *See infra*. We are persuaded, therefore, that Petitioner has set forth a convincing rationale for why a person of ordinary skill would have combined features from various embodiments of Pristash as discussed *infra*.

Patent Owner has not presented any evidence of secondary considerations. We, therefore, have not been given evidence of commercial success, long-felt but unsolved needs, failure of others, or unexpected results to consider.

The relatively high level of skill in the art is another consideration we have taken into account. In this determination, we were aided by expert testimony. According to Dr. Escuti, "a person of ordinary skill in the art

relevant to the ’370 patent would have at least an undergraduate degree in physics, optics, electrical engineering, or applied mathematics AND 3 years of work experience (or a graduate degree) in a field related to optical technology.” Escuti Decl. ¶ 23. Mr. Werner does not take issue with this testimony, and in fact proposes a similar standard:

> In this declaration, I rely on the following definition of a person of ordinary skill in the art: “a person of ordinary skill in the art of the patents would hold an undergraduate degree in physics, material science, electrical engineering, or mathematics and have one or both of the following: (1) three or more years of work experience in a field related to optical technology; or (2) a graduate degree in a field related to optical technology.”

Werner Decl. ¶ 36. We find that Mr. Werner’s definition is too limited, in that it does not include a person with an undergraduate degree in optics. We, therefore, do not accept his standard and adopt instead Dr. Escuti’s more complete definition.

2. Pristash Overview

Pristash describes a thin panel illuminator that includes a solid transparent panel member having one or more deformed output regions. Ex. 1006, Abstract. The arrangement causes light entering the panel along an input edge to be emitted along the length of the panel. *Id.*

This is illustrated in Figure 1 of Pristash, reproduced here:

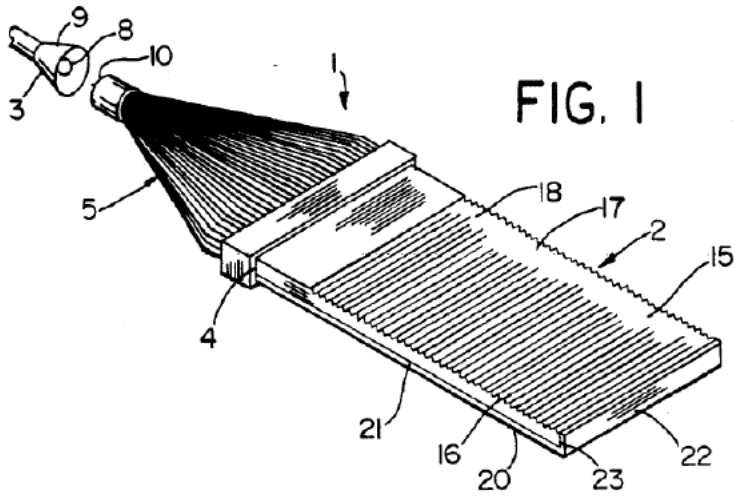

In Figure 1, light emitting panel 2 and disruptions 16 in the exterior surface 18 of the panel are shown. Ex. 1006, col. 3, ll. 9–48. As described by Pristash, "such disruptions 16 may vary in depth and shape along the length of the panel 2 to produce a desired light output distribution." *Id*. at col. 3, ll. 46–48.

Figure 1 of Pristash also depicts transition device 5, which is used to make the transition from light source 3 to light emitting panel input edge 4. *Id*. at col. 3, ll. 1–3. Pristash describes a number of different embodiments of the transition device. *See id*. at Figs. 15–19, col. 7, ll. 9–12. In one such embodiment, the transition region comprises optical fibers having a round connector at one end, as shown in Figure 1 above and in Figure 15 following:

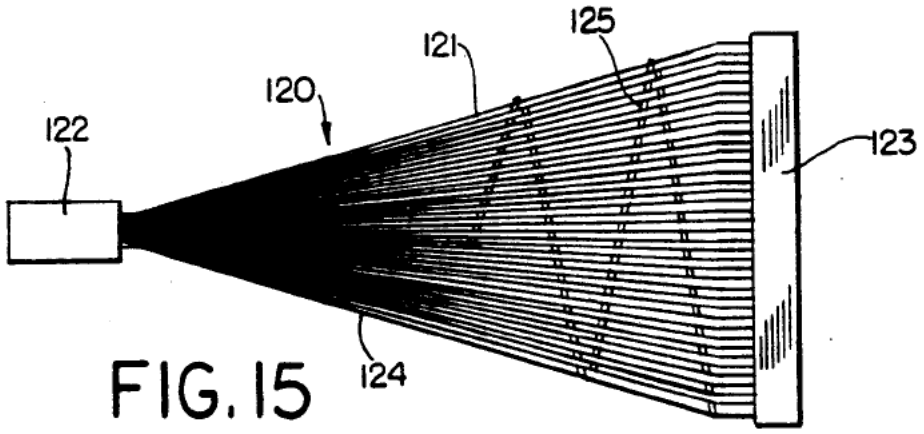

FIG. 15

Figure 15 of Pristash shows a transition device 120 that comprises a plurality of optical fibers 121, having a round or other shaped connector 122 at one end on which a source of light is easily focused and a rectangular or other shaped connector 123 at the other end substantially corresponding in shape to the panel input surface. The optic fibers 121 may be made of glass or a suitable transparent plastic material. Ex. 1006, col. 7, ll. 17–24.

Alternatively, Pristash describes a transition device made of a solid transparent material such as glass or plastic, having an input surface at one end of a cross-sectional shape on which a light source is easily focused such as round or square and having an output surface at the other end in the shape of the panel input surface. *Id*. at col. 7, ll. 36–42. This configuration is illustrated in Figures 18 and 19 of Pristash following:

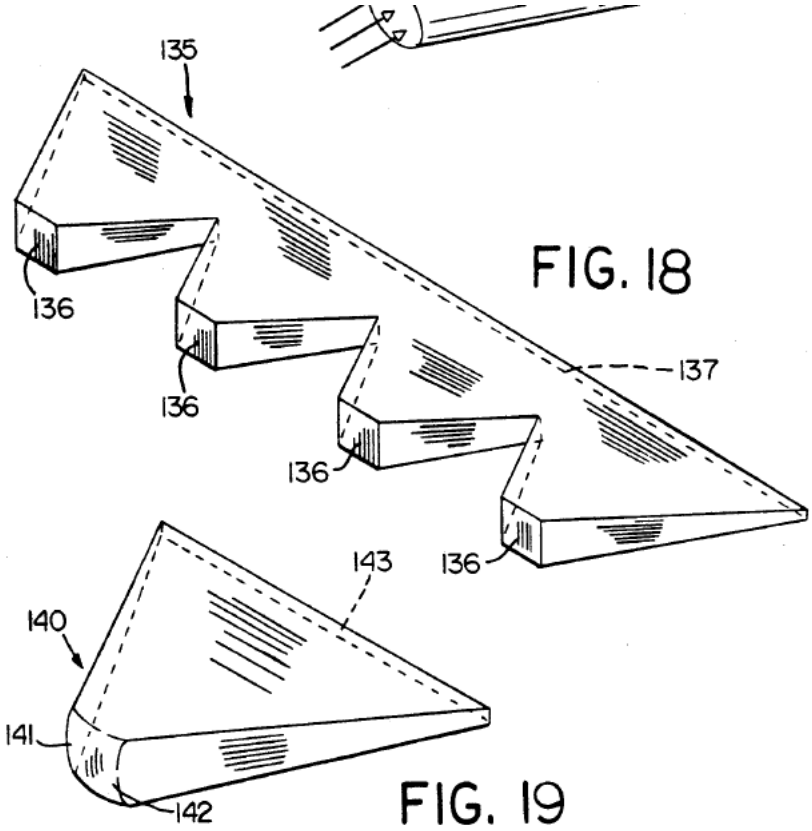

Figure 18 from Pristash shows a solid transparent transition device 135 including multiple input surfaces 136 at one end and a single output surface 137 at the other end. Figure 19 shows another solid transparent transition device 140 with a lens 141 at the input surface 142 shaped to spread the light evenly across its output surface 143. *Id*. at col. 7, ll. 49–55.

Pristash also describes alternative arrangements in which the solid transition device is separate from and integral with the light emitting panel:

> Although the various solid transparent transition devices are shown separate from the light emitting panels, it will be appreciated that such transition devices may be formed as an integral part of the panels. Also, in certain applications the transition devices may be eliminated and the light focused

> directly on the panel input surfaces to cut down on system losses.

Ex. 1006, col. 8, ll. 6–12.

Likewise, Pristash discloses several different embodiments for the light emitting panel. Figures 5 and 6 from Pristash, showing two examples, follow:

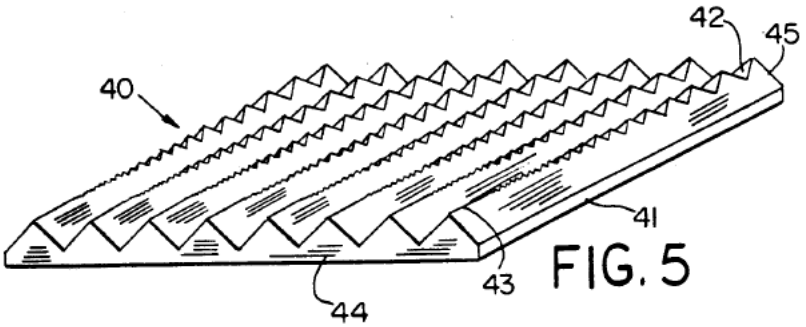

FIG. 5

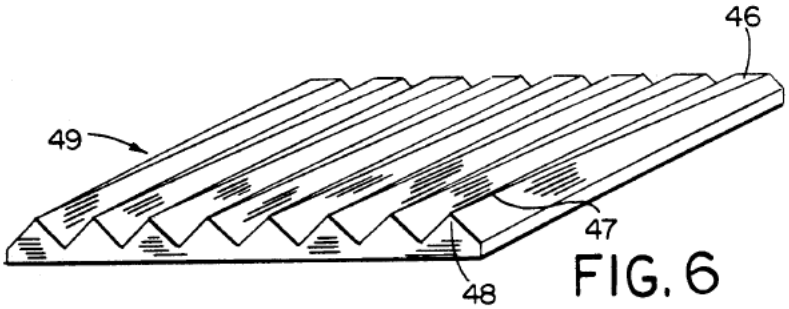

FIG. 6

Figures 5 and 6 from Pristash show alternative configurations for the light emitting panel. Ex. 1006, col. 4, l. 45–col. 5, l. 5. Figure 5 shows a form of light emitting panel 40 comprising a solid transparent prismatic film 41 having deformities 42 cut, molded, or otherwise formed along the top of the prism edges 43. *Id*. at col. 4, ll. 45–49. Although Pristash shows deformities 42 as being of a generally triangular shape, Pristash says they

may be of any desired shape that causes light to be emitted, and may vary in depth and shape along the length of the prism edges 43 to produce a desired light output distribution. *Id*. at col. 4, ll. 49–54.

Alternatively, as shown in Figure 6, Pristash states that diffuser surfaces 46 may be formed along the top edges 47 of the prismatic surfaces 48 of a prismatic film light emitting panel 49. These diffuser surfaces 46 may vary in depth and/or width along the length of the panel 49, and may comprise "a roughened surface, a lenticular surface, or a prismatic surface or the like that consists of multiple surface deformities." *Id*. at col. 4, ll. 57–64.

We turn now to the individual claims being challenged.

3. Claim 15

Petitioner's analysis of claim 15 in relation to Pristash appears at pages 22–24 of the Petition and in paragraphs 114–123 of the Escuti Declaration. As the Declaration states, "[c]laim 15 is similar to claim 1 except that claim 15 further requires that the pattern of light extracting deformities on or in the at least one side has at least two different types of light extracting deformities with one type varying along the length of the panel member." Escuti Decl. ¶ 115. That is, where claims 1 and 13 of the '370 patent require *opposite* sides of the panel to have different types of deformities, claim 15 requires the *same* side of the panel to have different types of deformities. Petitioner relies on Figures 5 and 6 of Pristash (reproduced *supra*) and the accompanying description in the specification to meet this limitation. Pet. 22–23.

Patent Owner contends that the Petition fails to show that Pristash discloses at least two different types of light extracting deformities on one side of the panel. PO Resp. 10–11. According to Patent Owner, Pristash

"merely discloses that the deformities may generally be of any desired shape." *Id*. at 12. Patent Owner also points to the Board's decision not to institute a review of claims 1 and 13 as evidence that Pristash is lacking different deformities on the same side of the panel. *Id*. at 11.

Petitioner responds that Patent Owner "completely ignores" citations to the record that demonstrate its contention regarding Pristash is incorrect. Reply 8. Specifically, Petitioner relies on the description of Figure 5 in Pristash's specification stating that the deformities 42 "may vary in depth and shape along the length of the prism edges 43." *Id*. at 9 (citing Ex. 1006, col. 4, ll. 49–54 (emphasis omitted)). Petitioner also cites the Escuti Declaration (¶¶ 83–85) and the description of Figure 6 in Pristash, stating that the diffuser surface 46 "may vary in depth and/or width along the length of the panel 49, and may comprise a roughened surface, a lenticular surface, or a prismatic surface or the like that consists of multiple surface deformities." *Id*. (citing Ex. 1006, col. 4, ll. 57–66) (emphasis omitted). Finally, Petitioner challenges Patent Owner's argument based on claims 1 and 13, which do *not* contain the limitation requiring different type deformities on the same side of the panel. *Id*. at 8. *See* discussion *supra*. As Petitioner states, "[c]laims 1 and 13 are not at issue here." *Id*.

We are not persuaded by Patent Owner's arguments attempting to distinguish Pristash. Instead, we are convinced by Petitioner's arguments, citations to the Pristash disclosure, and the testimony of its expert, Dr. Escuti, that Pristash describes a panel that meets this limitation. Specifically, Pristash, taken as a whole, discloses in Figures 5 and 6 the combination of prismatic deformities with other deformity types (e.g., lenticular) on the same side of the light emitting panel as this claim requires.

We are supported also in this conclusion by the testimony of Mr. Werner, who agreed that a lens is a different type of deformity than a prism. Werner Dep. 111:12–17.

At oral argument, Patent Owner's counsel asserted that Pristash does not meet this limitation because prismatic surface 48 in Figure 6 is not a "deformity" as the claims require, but is itself the surface of the panel. Hearing Tr. 49:7–10. We are not persuaded by this argument. There is no requirement in the claims that the deformities be on separate surfaces, only that they be on the same side of the panel. Moreover, the '370 patent specifically refers to "prismatic surfaces, depressions or raised surfaces of various shapes" as examples of light extracting deformities. Ex. 1001, col. 5, ll. 57–60.

We credit also Petitioner's evidence, summarized *supra* (which Patent Owner does not challenge), that the other elements of claim 15 are found in Pristash. We conclude, therefore, that Petitioner has demonstrated, by a preponderance of the evidence that claim 15 would have been obvious over Pristash.

4. Claim 27

Petitioner's analysis of claim 27 in relation to Pristash appears at pages 24–25 of the Petition and at paragraphs 124–133 of the Escuti Declaration. Claim 27 contains the following language similar to that in claim 15: "the pattern of light extracting deformities on or in the at least one side has at least two different types of light extracting deformities." Petitioner's arguments as to this aspect of the claim are those for claim 15. PO Resp. 10. We determine, for the reasons stated above for claim 15, that Petitioner has demonstrated that Pristash meets this element of the claim.

As stated in the Escuti Declaration, claim 27 (unlike claims 1 and 15) also requires a "transition region" between the input edge of the panel and the pattern of deformities. Escuti Decl. ¶ 125. Petitioner identifies item 5 in Figure 1 of Pristash as such a "transition device" meeting the transition region recitation in the claims. Pet. 25, claim element 27.e (citing claim element 13.f [Pet. 21]; Escuti Decl. ¶ 131). As Dr. Escuti testifies:

> The transition device also allows the light to mix and spread. According to Pristash, "a **transition device** is provided for **converting** easily focused light received from a light source **to the shape** of the panel input surface." *Id.* at 1:59-62 (emphasis added). Pristash further recites that "the transition device [may be] made from a solid transparent material, and is provided with single or multiple input and output ends of a desired shape. Also, the input and/or output ends of **the transition device may** be lens shaped to **spread the light evenly across such surfaces**," *Id.* at 2:1-8 (emphasis added). One of ordinary skill in the art would understand that the transition device of Pristash is the same as the transition region of the '370 Patent.

Escuti Decl. ¶ 110.

Patent Owner responds that transition device 5 in Pristash is not a "transition region" as claimed in the '370 patent. PO Resp. 8–9. First, Patent Owner contends that the transition region identified in the Petition does not allow the light to "mix and spread," as called for in the claim. *Id*. at 8. According to Patent Owner, "the transition region must be part of the panel member such that the light can mix and spread." *Id*. at 9. Petitioner responds that this is a "refashioning" of an argument that the Board rejected in its Institution Decision, namely, that in the '370 patent the transition device and the light emitting panel must be integral. Reply 4.

We agree with Petitioner that this argument was previously raised, and that the Board found it unpersuasive as described in our Institution Decision. Paper 11, 9. For the reasons stated there, we are not persuaded by Patent Owner's argument. Specifically, Patent Owner points to nothing in the '370 patent specification that persuades us that the transition region has to be integral with the panel. In any event, whether the panel must be integral or not is not determinative, as Pristash describes the transition device as being both integral with the panel and separate. *See supra*. We, therefore, do not consider the phrase "the panel member has a transition region" as requiring an integral structure, but even if we did, we find that Pristash would meet it.

We note also that Petitioner's claim chart analysis refers specifically to the embodiment of the "solid" transition device shown in Figures 18 and 19 of Pristash: "[T]he transition device [may be] made from a solid transparent material, and is provided with single or multiple input and output ends of a desired shape" Pet. 21, claim element 13.f (cited by claim element 27.e [Pet. 25])(quoting Pristash, Ex. 1006 col. 2, ll.1–8).

As to the "mix and spread" limitation, we agree with the testimony of Petitioner's expert, Dr. Escuti, that in Pristash, the light will mix and spread within the transition region "and that's why it's there." Escuti Dep. 108:15–21. The description of the transition device in Pristash, quoted *supra*, makes it clear that the light is mixed and spread, confirming Dr. Escuti's testimony. We agree also with the argument that the claim language requires the transition region to "allow . . . the light to mix and spread" and does not require mixing and spreading of the light to take place in the transition

region, although the evidence supports our finding that it does. Hearing Tr. 17:1–5.

Patent Owner asserts that Dr. Escuti "completely ignores" this claim requirement. PO Resp. 9. Patent Owner relies, instead, on paragraph 39 of the Werner Declaration to support its argument. *Id*. According to Mr. Werner, the Petition and claim chart "miss a crucial point of this limitation." Werner Decl. ¶ 39.

On this issue, however, we credit Dr. Escuti's testimony over Mr. Werner's. Dr. Escuti testified that he has over 16 years of experience in the fields of liquid crystal display technologies, backlight design, optical physics, and electronic materials. Escuti Decl. ¶ 5. In comparison, Mr. Werner testified that since 1971, he has not been involved in the design or engineering of liquid crystal displays or backlighting units. Werner Dep. 16:5–17. Mr. Werner was unable to say whether two light rays crossing paths in a light guide plate would be an example of mixing. Werner Dep. 80:17–81:8. Furthermore, at his deposition he would not provide an opinion as to whether Pristash discloses the transition region called for in the claims. *Id*. at 116:19–117:8. Instead of discussing what is disclosed in Pristash, Mr. Werner's declaration focuses on alleged deficiencies in the Petition. Werner Decl. 39. Under our rules, expert testimony that does have a proper basis is entitled to little or no weight. 37 C.F.R. § 42.65(a). Dr. Escuti, on the other hand, does provide such an opinion, both in his declaration and at his deposition. Escuti Decl. ¶¶ 109–13; 131–33; Escuti Dep. 103:11–104:9. We find that Dr. Escuti's qualifications and experience are superior to those of Mr. Werner, and that his testimony on this issue is more credible and helpful than Mr. Werner's.

Patent Owner raises two other contentions as to this requirement. The first relates to the claim language positioning the transition region "between the at least one input edge and the patterns of light extracting deformities." Patent Owner asserts that the transition device in Pristash is not so positioned. PO Resp. 13. Petitioner responds to this positional requirement by referring to Dr. Escuti's explanation at his deposition. Reply 5–6. We agree with Petitioner's argument (supported by testimony from Dr. Escuti) that if the transition device in Pristash is integral with the panel, Pristash discloses a device that is arranged between input edge 10 and the pattern of light disruptions 16. *Id*.; Escuti Dep. 105:4–14.

As we have stated, Pristash discloses both integral and separate transition devices. If the transition device is not integral with the panel, then we agree with Petitioner that the transition region meeting this claim element is the portion between the input side 4 and the elements 16. *Id*. We have reviewed the testimony of Dr. Escuti to this effect and find it credible. Escuti Dep. 105:16–106:7.

Finally, Patent Owner contends that Petitioner fails to demonstrate that the requirement that "at least one side of the transition region contains optical elements" is met by Pristash. PO Resp. 9. A similar limitation appears in claim 13. According to Patent Owner, the single lens disclosed in Figure 19 of Pristash (Escuti Decl. ¶ 112) does not meet this requirement for plural "optical elements." PO Resp. 9.

We addressed this argument in our Institution Decision. Paper 11, 9–10, 16. We are still not persuaded by this argument, as nothing in the '370 patent specification suggests that "optical elements" should be restricted to one lens, or that using two or more lenses instead of one would not have

been obvious. Moreover, Figures 15 and 18 (reproduced above) of Pristash show multiple "optical elements." Ex. 1006, col. 7, ll. 18, 50–51.

We credit also Petitioner's evidence (which Patent Owner does not challenge) that the other elements of claim 27 are found in Pristash. For the foregoing reasons, we conclude that Petitioner has demonstrated that claim 27 would have been obvious over Pristash.

C. Asserted Obviousness Based on Kobayashi and Pristash

Petitioner contends that claims 15 and 27 would have been obvious in light of Kobayashi and Pristash. Pet. 46–58. In support of this contention, Petitioner provides detailed claim charts and expert testimony through the Escuti Declaration. Pet. 53–56; Escuti Decl. ¶¶ 230–33, 255–79. Through the claim charts and expert testimony, Petitioner asserts that Kobayashi and Pristash meet each element of the challenged claims. Petitioner admits that "[a] transition region is not explicitly disclosed in Kobayashi." Pet. 47. However, Petitioner contends that it "would have been obvious to one of ordinary skill in the art to combine Pristash with Kobayashi." *Id.* (citing Escuti Decl. ¶¶ 230–33).

In response, Patent Owner again challenges the sufficiency of Petitioner's proof in several respects that we will discuss *infra*. PO Resp. 14–15. We note, however, that, as was the case *supra*, most of the claim elements are undisputed. Patent Owner challenges Petitioner's assertions only as to certain claim elements, and does not challenge Petitioner's presentation of the rationale to combine Pristash and Kobayashi. *See infra*. Likewise, as noted *supra*, Patent Owner has not presented any evidence of secondary considerations, and the relatively high level of skill in the art is another consideration we have taken into account in our analysis.

1. Kobayashi Overview

This patent describes planar illuminating device used as a backlight for liquid crystal displays. Ex. 1008, col. 1, ll. 6–9. The device has a rectangular light transmitting plate of a transparent material. *Id*. at col. 4, ll. 10–11. One side of the plate has prismatic cuts. *Id*. at col. 4, l. 27. The other side has a reflecting finish, e.g., an array of spot-shaped light reflecting layers. *Id*. at col. 4, ll. 28–29. This is illustrated by Figure 2 of Kobayashi, reproduced here:

FIG. 2

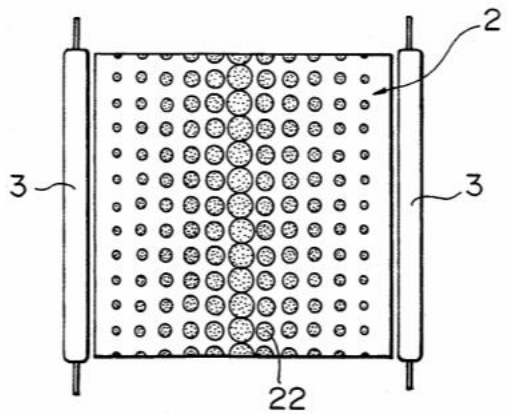

In Figure 2 above, light plate 2, fluorescent lamps 3, and array of spot-shaped reflective layers 22 (e.g., of white paint or aluminum vapor deposition) are shown. *Id*. at col 4, ll. 45–47.

2. Analysis

Petitioner contends that it would have been obvious to combine Pristash's transition region with Kobayashi. Pet. 47. Petitioner asserts that this combination would have been obvious because "transition devices were known at the time for mixing and spreading light from the light source to the

light guide." *Id*. The Escuti Declaration (¶¶ 230–33) provides additional support for this contention.

Patent Owner contends that the Petition does not argue that Kobayashi meets the following requirement of claims 15 and 27:

> where the pattern of light extracting deformities on or in the at least one side has at least two different types of light extracting deformities and at least one of the types of deformities on or in the at least one side varies along at least one of the length and width of the panel member.

PO Resp. 14. Patent Owner then refers back to its argument that Pristash also does not meet this limitation. *Id*.

Petitioner responds that its previous arguments establish that Pristash meets this limitation. Reply 12. Petitioner also points to testimony from Mr. Werner regarding Kobayashi, which Petitioner says establishes that "[f]or all the limitations upon which Petitioner relies on Kobayashi, Mr. Werner agreed they were disclosed in Kobayashi. *See* Ex. 1020, at 118:6-121:12." *Id*. at 13. For example, Mr. Werner testified that Kobayashi discloses at least one of the sides of the panel member having a pattern of light extracting deformities that are projections or depressions on or in the at least one side to cause light to be emitted from the panel member. Werner Dep. 118:23–119:2. For reasons discussed above, we determine that Pristash meets this limitation. Further, we determine that Kobayashi's prismatic cuts also satisfy the requirement.[4] We are persuaded, therefore, that the Pristash-Kobayashi combination meets this limitation.

---

[4] In our Institution Decision, we determined that Petitioner failed to demonstrate that Kobayashi's spot-shaped reflecting layers qualified as "light extracting deformities that are projections or depressions." Paper 11, 14.

Patent Owner argues also that Kobayashi does not meet the transition region requirement of claim 27. PO Resp. 14–15. This argument is unavailing, as Petitioner relies on Pristash's disclosure of a panel member to meet this limitation. Reply 12–13. For the reasons discussed *supra*, we determine that Pristash meets this requirement of claim 27, and that Petitioner has set forth a convincing rationale for combining Kobayashi and Pristash.

We credit also Petitioner's evidence (which Patent Owner does not challenge) that the other elements of claims 15 and 27 are found in Kobayashi and Pristash. We conclude, therefore, that Petitioner has demonstrated that claims 15 and 27 would have been obvious over Kobayashi and Pristash.

D. Real Party-in-Interest

Patent Owner contends that the Petition is insufficient for failure to name two real parties-in-interest: LG Electronics Inc. and LG Electronics U.S.A. Inc. PO Resp. 15. The identical argument was raised in Patent Owner's Preliminary Response. Prelim. Resp. 18. We determined in our Institution Decision that Patent Owner failed to provide convincing evidence that LG Electronics Inc. and LG Electronics U.S.A. Inc. are real parties in interest. Paper 11, 16–17.

Patent Owner's Response relies on the same arguments and evidence that we considered in our Institution Decision. For the reasons stated there, we determine that Patent Owner fails to prove that the Petition does not name the real parties-in-interest.

IV. ORDER

In consideration of the foregoing, it is

ORDERED that this is a final written decision of the Board under 35 U.S.C. § 318(a). Parties to the proceeding seeking judicial review of the decision must comply with the notice and service requirements of 37 C.F.R. § 90.2;

FURTHER ORDERED that claims 15 and 27 of U.S. Patent 7,537,370 are unpatentable under 35 U.S.C § 103(a).

PETITIONER:

Robert G. Pluta
Amanda K. Streff
Baldine B. Paul
Anita Y. Lam
MAYER BROWN LLP
rpluta@mayerbrown.com
astreff@mayerbrown.com
bpaul@mayerbrown.com
alam@mayerbrown.com

PATENT OWNER:

Justin B. Kimble
Jeffrey R. Bragalone
BRAGALONE CONROY P.C.
jkimble@bcpc-law.com
jbragalone@bcpc-law.com