Trials@uspto.gov
571.272.7822

Paper 39
Entered: September 29, 2016

UNITED STATES PATENT AND TRADEMARK OFFICE

BEFORE THE PATENT TRIAL AND APPEAL BOARD

MILWAUKEE ELECTRIC TOOL CORPORATION,
TECHTRONIC INDUSTRIES CO. LTD., TECHTRONIC INDUSTRIES NORTH AMERICA, INC., and ONE WORLD TECHNOLOGIES, INC.,
Petitioner,

v.

IRWIN INDUSTRIAL TOOL COMPANY,
Patent Owner.

Case IPR2015-01461
Patent 8,579,554 B2

Before RUSSELL D. SLIFER, *Deputy Director*, and JOSIAH C. COCKS and MICHAEL L. WOODS, *Administrative Patent Judges.*

WOODS, *Administrative Patent Judge.*

FINAL WRITTEN DECISION
35 U.S.C. § 318(a) and 37 C.F.R. § 42.73

I. INTRODUCTION

Milwaukee Electric Tool Corporation et al. (collectively, "Petitioner") filed a Petition (Paper 2, "Pet.") requesting *inter partes* review of claims 1–37 of U.S. Patent No. 8,579,554 (Ex. 1001, "the '554 patent"). Pet. i. We issued a Decision to Institute an *inter partes* review of claims 1–37 of the '554 patent on the following grounds: (1) claims 1, 3–5, 14–18, 20, 22–28, 32, 34, 36, and 37 as anticipated under 35 U.S.C. § 102(b) by Redford; (2) claims 1–5, 14–20, 23–28, 30–34, and 37 as obvious under 35 U.S.C. § 103(a) over Redford; and (3) claims 2, 6–13, 21, 29, 33, and 35 as obvious under 35 U.S.C. § 103(a) over Redford and Starbuck. Paper 7, 20 ("Inst. Dec.").

After institution of trial, Irwin Industrial Tool Company ("Patent Owner") filed a Patent Owner Response (Paper 17, "PO Resp."), to which Petitioner replied (Paper 23, "Pet. Reply"). Patent Owner also filed a Motion to Exclude (Paper 25, "Motion") to exclude portions of Exhibit 1002 (the Declaration of Mr. James Pangerc), to which Petitioner filed an Opposition (Paper 28, "Opposition").

Oral argument was conducted on August 26, 2016, and a transcript of the hearing will be entered in due course.

We have jurisdiction under 35 U.S.C. § 6. After considering the evidence and arguments of both parties, and for the reasons set forth below, we determine that Petitioner has not met its burden of showing, by a preponderance of the evidence, that any of claims 1–37 of the '554 patent are unpatentable.

A. Related Matters

U.S. Patent No. 8,579,555 ("the '555 patent") is a continuation-in-part of the '554 patent and is the subject of concurrently filed *inter partes* review IPR2015-01462. *See* Pet. 2. Petitioner also states that the '554 and the '555 patents are the subject of Civil Action No. 3:15-cv-30005, filed January 8, 2015, in the U.S. District Court for the District of Massachusetts. *Id.*

B. The '554 Patent (Ex. 1001)

The '554 patent is titled "Hole Cutter with Axially-Elongated Aperture Defining Multiple Fulcrums" and describes a "hole cutter [with] a cylindrical blade body including . . . one or more axially-elongated apertures . . . configured to receive a lever." Ex. 1001, at (54), (57). The '554 patent further describes that "[e]ach axially-elongated aperture includes a . . . fulcrum [so that a] lever, such as a screwdriver, can be inserted into the aperture and placed against each of the fulcrums to lever slugs out of the interior of the blade body." *Id.* at Abstract. Figure 2, which is reproduced below, is an "embodiment of a hole cutter embodying [Patent Owner's] invention." *Id.* at 4:34–35.

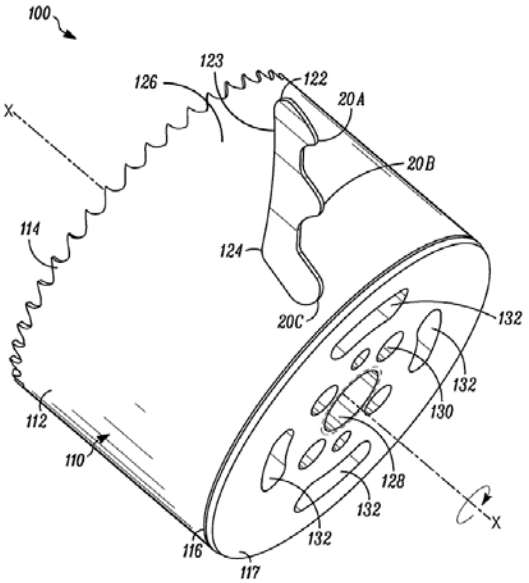

FIG. 2

Figure 2 depicts hole cutter *100*, including substantially cylindrical blade body *110*, with fulcrums *120A*, *120B*, and *120C* within an axially-extending slot or aperture.[1] *Id.* at 8:64–9:11.

C. Illustrative Claim

Claims 1 and 24 are independent. Claim 1 is illustrative of the subject matter and is reproduced below:

> 1. A hole cutter, comprising:
>
> a substantially cylindrical blade body defining a cutting edge; and
>
> at least one axially-elongated aperture formed through the blade body and spaced from the cutting edge such that a portion of the blade body extends between the cutting edge and the axially-elongated aperture,
>
> wherein the axially-elongated aperture is configured to receive therethrough a lever for removing a work piece slug from an interior of the blade body, and the blade body defines within the axially-elongated aperture a plurality of fulcrums configured for engaging the lever and for levering slugs out of the interior of the blade body by applying a sufficient levering force against the fulcrums to lever a slug towards the cutting edge, the plurality of fulcrums including a first fulcrum axially spaced adjacent to the cutting edge, a second fulcrum axially spaced further away from the cutting edge than the first fulcrum, and a third fulcrum axially spaced between the first and second fulcrums.

Ex. 1001, 12:37–56.

[1] Although Figure 2 denotes the fulcrums as *20A*, *20B*, and *20C*, this appears to be a typographical error, as the Detailed Description of the ’554 patent instead refers to the fulcrums of Figure 2 as *120A*, *120B*, and *120C*. *Compare* Ex. 1001, Fig. 2, *with* Ex. 1001, 9:4–6.

D. The Prior Art

Petitioner relies on the following references:

Short Name	Patent Number	Date	Exhibit Number
Redford	US 7,237,291 B2	July 3, 2007	Ex. 1003
Starbuck	US 2,473,077	June 14, 1949	Ex. 1004

Petitioner also relies on the declaration testimony of James Pangerc, senior engineering manager at Techtronic Industries, in support of the above-noted grounds. Ex. 1002.

E. Grounds of Unpatentability

We review the ’554 patent under the following three grounds of unpatentability: (1) claims 1, 3–5, 14–18, 20, 22–28, 32, 34, 36, and 37 as anticipated by Redford; (2) claims 1–5, 14–20, 23–28, 30–34, and 37 as obvious over Redford; and (3) claims 2, 6–13, 21, 29, 33, and 35 as obvious over Redford and Starbuck. Inst. Dec. 19–20.

1. Overview of Redford (Ex. 1003)

Redford is titled “Combined Nut Recess Cleaner and Nut Driver Tool” and describes a “combined nut area cleaner and nut driver tool for manipulating nuts residing in recesses prone to filling with environmental debris.” Ex. 1003, at (54), (57).

Figure 1 of Redford is reproduced below:

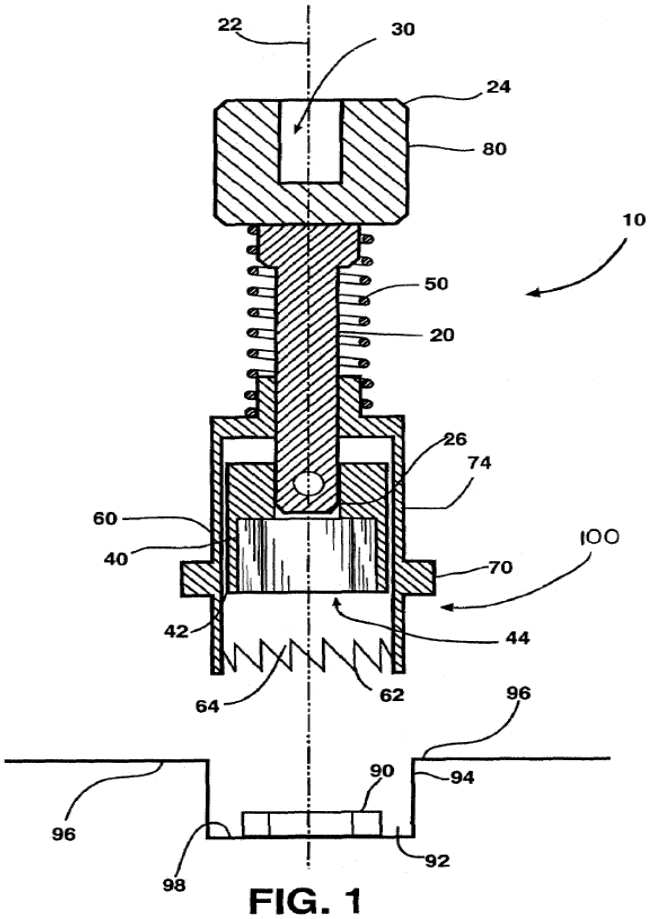

FIG. 1

Figure 1 depicts Redford's combined nut area cleaner and nut driver tool *10* with body *20*, nut driver *40*, and debris removing portion *100*, which includes cleaning flange *60*. Ex. 1003, 4:7–12. Figure 1 also depicts debris removing portion *100* in its extended position (or cleaning mode), which enables cleaning flange *60* to clean the area around nut *90*. *See id.* at 5:15–20.

Figure 2 of Redford is also reproduced below:

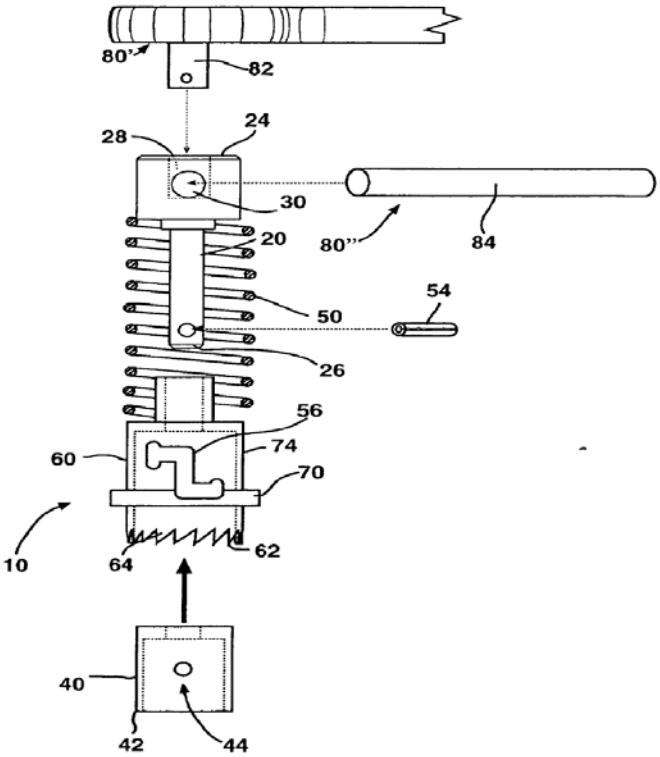

FIG. 2

As further depicted in Figure 2, debris removing portion *100* can be retracted to its fastener driving mode (from its cleaning mode) through the utilization of spring *50* and S-shaped channel *56*. *See id.* at 5:19–21. When assembled, pin *54* fixes nut driver *40* to body *20* and maneuvers through S-shaped channel *56*. *See id.* at 5:40–57 (referring to Figures 5 and 6). To move tool *10* from its cleaning mode to its fastener driving mode, a user pushes upwards debris removing portion *100*, thereby compressing spring *50* and maneuvering pin *54* from the top left portion of S-shaped channel *56* to the lower right portion of S-shaped channel *56*. *See id.* at 5:38–57.

Notably, Redford also discloses that "the cleaning flange is essentially a hole saw." *Id.* at 4:61–63; *see also id.* at 2:19–20.

2. Overview of Starbuck (Ex. 1004)

Starbuck is titled "Trepanning Tool" and describes a "tool of that type adapted to cut a relatively large hole through wood or metal flooring or side walls." Ex. 1004, at (54), 1:2–4.

Figure 1 of Starbuck is reproduced below:

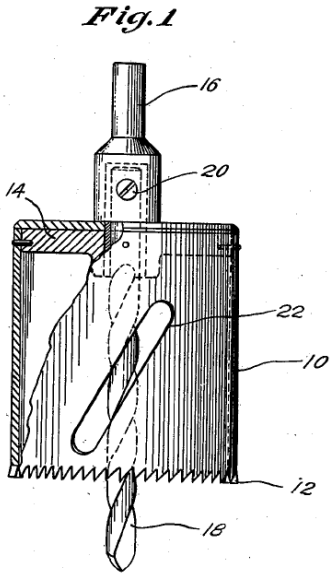

Figure 1 depicts Starbuck's cylindrical trepanning tool *10* with teeth *12*, drill *18*, and slots *22* that "aid in removal of the cuttings." Ex. 1004, 1:8–10, 1:51–2:5.

II. ANALYSIS

A. Claim Construction

In an *inter partes* review, claim terms in an unexpired patent are given their broadest reasonable construction in light of the specification of the patent in which they appear. 37 C.F.R. § 42.100(b); *Cuozzo Speed Techs., LLC v. Lee*, 136 S. Ct. 2131, 2144–46 (2016) (upholding the use of the broadest reasonable interpretation standard). A presumption exists that a claim term should be construed in light of its ordinary and customary meaning. *CCS Fitness, Inc. v. Brunswick Corp.*, 288 F.3d 1359, 1366 (Fed. Cir. 2002). Under the broadest reasonable construction standard, claim terms are generally given their ordinary and customary meaning, as

would be understood by one of ordinary skill in the art in the context of the entire disclosure. *In re Translogic Tech., Inc.*, 504 F.3d 1249, 1257 (Fed. Cir. 2007).

In our decision instituting trial, we adopted Petitioner's proposed construction in interpreting the following terms/phrases: (1) "the axially-elongated aperture is configured to receive therethrough a lever for removing a work piece slug from an interior of the blade body"; (2) "a plurality of fulcrums configured for engaging the lever and for levering slugs out of the interior of the blade body," and (3) "first means . . . for engaging the lever and for levering slugs," "second means . . . for engaging the lever and for levering slugs," and "third means . . . for engaging the lever and for levering slugs." Inst. Dec. 6–7. For general reference, the constructions of those terms set forth in the decision instituting trial are reproduced below:

Claim Term/Phrase	Construction
"the axially-elongated aperture is configured to receive therethrough a lever for removing a work piece slug from an interior of the blade body"	an axially-elongated aperture that is capable of receiving therethrough a lever for removing a work piece slug from an interior of the blade body by a user
"a plurality of fulcrums configured for engaging the lever and for levering slugs out of the interior of the blade body"	a plurality of fulcrums capable of engaging the lever and capable of levering slugs out of the interior of the blade body by a user
"first means . . . for engaging the lever and for levering slugs," "second means . . . for engaging the lever and for levering slugs," and "third means . . . for engaging the lever and for levering slugs"	a first fulcrum, a second fulcrum, and a third fulcrum, each being defined by an edge of an opening in the sidewall of the hole saw and capable of a user engaging a lever to lever slugs out of the blade body, and equivalents thereof

Based on the record developed during trial, and as the construction is not outcome-determinative, we do not alter the meaning of these terms.

B. Grounds of Unpatentability

1. Anticipation Ground Based on Redford

As reproduced above, independent claim 1 is drawn to a hole cutter comprising a cylindrical blade body with "at least one axially-elongated aperture formed through the blade body." Ex. 1001, 12:37–56. The aperture has first, second, and third fulcrums and "is configured to receive therethrough a lever for removing a work piece slug." *Id.* Petitioner contends that Redford teaches the claimed "hole cutter," as Redford discloses that cleaning flange *60* "is essentially a hole saw." Pet. 16 (citing Ex. 1003, 4:10–12, 61–63). Petitioner further contends that Redford's S-shaped channel *56* comprises the claimed first, second, and third fulcrums, as shown below in Redford's Figure 2 (as annotated by Petitioner) (*id.* at 18):

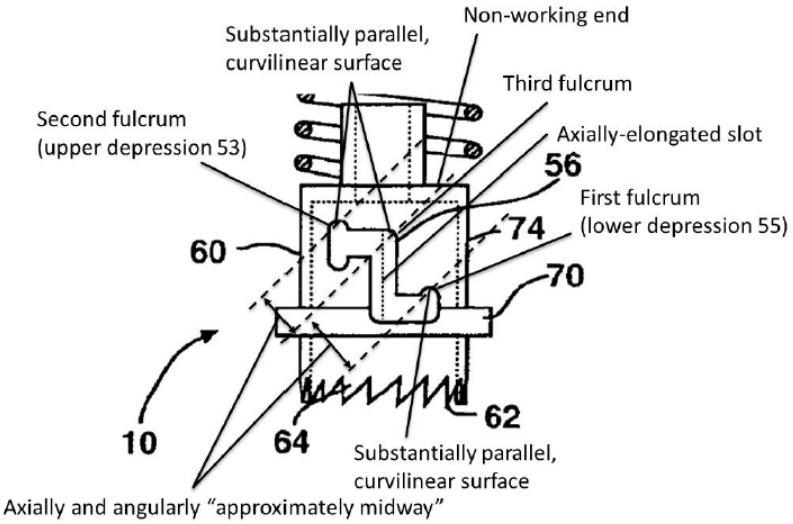

Figure 2 of Redford depicts nut driver tool *10* and cleaning flange *60* (Ex. 1003, 4:7–12), and as annotated and asserted by Petitioner, also includes "axially elongated aperture" *56* that is capable of receiving a lever for removing workpiece slugs and has a "first fulcrum," a "second fulcrum," and a "third fulcrum," as called for in the claims. Pet. 16–20 (citations omitted).

In presenting this ground of unpatentability, Petitioner notes that Redford's cleaning flange *60* is removable from nut driver *40* and that "the user could unfasten the cleaning flange piece from the body/nut driver piece." *Id.* at 19 (citing Ex. 1003, 6:6–10). Petitioner then proposes two alternative ways in which Redford's cleaning flange *60* could be used "as a conventional hole saw" (*id.* (citing Ex. 1002 ¶ 11)), which we address separately below.

a. "Connectable to a Different Drive Structure"

First, and in relying on the testimony of Mr. Pangerc, Petitioner argues that once cleaning flange *60* is removed from the nut driver *40*, "it would have been apparent to a person of ordinary skill in the art that the cleaning flange 60 is *connectable to a different drive structure for use as a conventional hole saw*." *Id.* (emphasis added) (citing Ex. 1002 ¶ 11). Petitioner explains that "a hole saw arbor could have been threaded or otherwise attached to the stem extending upward from the cleaning flange 60." *Id.*; *see also* Ex. 1002 ¶ 11 (Mr. Pangerc testifying that "a hole saw arbor could have been threaded or otherwise attached to the stem extending upward from the cleaning flange 60 (i.e., the structure that received the body 20)").

In contesting this argument, Patent Owner argues, *inter alia*, that Petitioner's proposed modifications are not "disclosed or otherwise suggested by Redford." PO Resp. 19–20. Patent Owner asserts that "Redford does not teach or suggest any modification of the stem of the cleaning flange 60 to include a thread or other coupling for mating with an arbor." *Id.* at 26. Relying on Mr. Vallee's and Mr. Novak's testimony, Patent Owner explains that "Petitioner's proposed modification would require additional manufacturing and reinforcement of the stem/body 20 to include a thread or other coupling." *Id.* (citing Ex. 2004 ¶ 53; Ex. 2006 ¶ 63).

Patent Owner's argument is persuasive. In the context of anticipation, it is not enough to find that a prior art device is merely capable of being adapted or modified to operate in a manner that would anticipate the claims. *See Typhoon Touch Techs., Inc. v. Dell, Inc.*, 659 F.3d 1376, 1380 (Fed. Cir. 2011) (discussing *Fantasy Sports Props., Inc. v. Sportsline.com, Inc.*, 287 F.3d 1108, 1117–18 (Fed. Cir. 2002)); *see also Dell Inc. v. Acceleron, LLC*, 818 F.3d 1293, 1299 (Fed. Cir. 2016) ("For anticipation purposes, the absence of such a teaching makes it immaterial whether . . . a user . . . could modify the system to activate such remote booting"). Thus, even if "no claim in the '554 patent requires an arbor or any other particular drive structure," as Petitioner asserts (Pet. Reply 18), that Redford's cleaning flange *60* must be modified in order for it to be "use[d] as a conventional hole saw," as suggested in the Petition (*see* Pet. 19), means that Redford is not an anticipatory disclosure.

Here, we find Mr. Vallee's testimony that "there is no portion of the cleaning flange 60 that can be easily connected to a rotating device" persuasive. Ex. 2004 ¶ 53. We do not see how "a hole saw arbor could have been threaded or otherwise attached to the stem extending upward from the cleaning flange," as argued by Petitioner (Pet. 19), without modifying Redford's structure. Nothing in Redford discloses that "the stem extending upward from the cleaning flange" is either threaded or otherwise attachable to a different drive structure without modification. *See also* Ex. 2004 ¶ 53 ("No such standard means of attaching a hole saw arbor to the cleaning flange 60 is described in Redford.") Furthermore, although Redford discloses that "the cleaning flange could be remov[ed]" from nut driver *40* (Ex. 1003, 6:6–10), this is not a disclosure that the cleaning flange includes structure that allows it to be "connectable to a different drive structure for use as a conventional hole saw," as Petitioner suggests (Pet. 19). In particular,

neither Figure 1 nor Figure 2 of Redford—reproduced *supra*—depicts a stem with threading or an alternative attachment mechanism (that avoids the use of pin *54*), nor does Petitioner cite to anything in Redford to support a finding that Redford's cleaning flange *60* is connectable to a threaded stem or to a different, second, attachment mechanism. *See id.* Instead, and as discussed above, Redford's attachment mechanism includes and requires the use of pin *54* to connect cleaning flange *60* to body *20*.

For at least this reason, we are not persuaded that Petitioner has established by a preponderance of the evidence that the claims are anticipated by Redford under this first theory.

b. "Driven by the Same Body 20 and Pin 54"

Second, Petitioner argues, "[a]lternatively, the cleaning flange 60 could have been attached to and driven by the same body 20 and pin 54 as before, but without the nut driver 40." Pet. 19 (citing Ex. 1002 ¶ 11).

In response to this second theory, Patent Owner argues, *inter alia*, "the pin 54 and body 20, when driving the cleaning flange 60, would block use of the S-shaped channel as Petitioner's alleged second and third fulcrum/means." PO Resp. 31. In referencing Redford's Figure 5, Patent Owner further explains that "the upper depression 53 is occupied by the pin 54 when cleaning flange 60 is being driven for cleaning. Because the pin 54 extends from the body 20, and the body extends axially into the cleaning flange, it too would also block use of the alleged third fulcrum/means." *Id.* at 31–32 (citing Ex. 2006 ¶¶ 51, 62).

Patent Owner's argument is persuasive. Redford's pin *54* prevents Redford's device from satisfying the claimed first and second fulcrums (claim 1) and from satisfying the claimed first and second "means for engaging the lever" (claim 24).

To illustrate Patent Owner's point, we reproduce Redford's Figures 5 and 6, below:

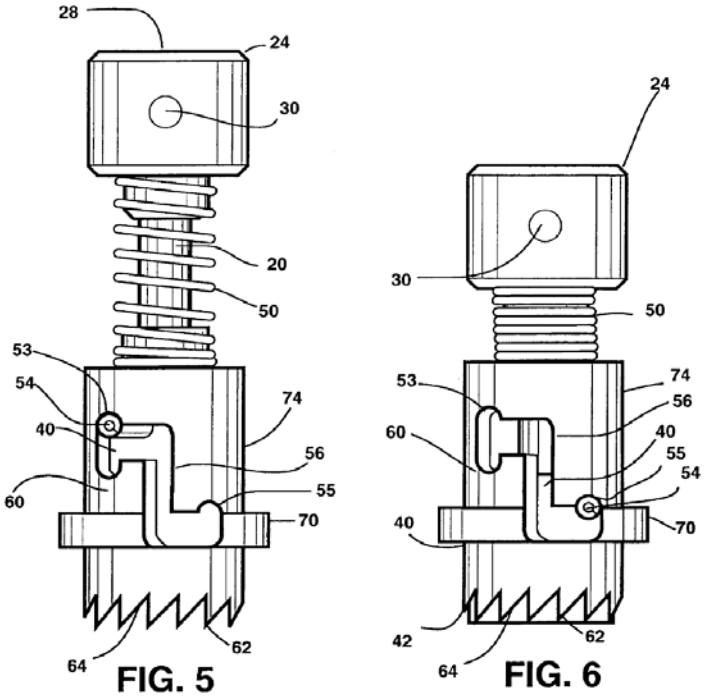

Figure 5 depicts cleaning flange *60* in the extended position and Figure 6 depicts cleaning flange *60* in the retracted position. *See* Ex. 1003, 3:5–10, 5:57–59.

As shown, pin *54* maneuvers in S-shaped channel *56*, thereby occupying either upper depression *53* or lower depression *54*, depending on the position of cleaning flange *60*. Accordingly, *even if* nut driver *40* is removed, and "the cleaning flange 60 could have been attached to and driven by the same body 20 and pin 54 as before," as Petitioner argues (Pet. 19), pin *54* prevents upper depression *53* and lower depression *54* from satisfying the claimed first and second "fulcrums" (claim 1) and first and second "means for engaging a lever" (claim 24).

For at least this reason, we are not persuaded that Petitioner has established by a preponderance of the evidence that the claims are anticipated by Redford under this second theory.

2. Obviousness Ground Based on Redford

Petitioner also argues that if the claims are not anticipated by Redford, then the claims would have been obvious in view of Redford. Pet. 26. Petitioner reasons that:

> [i]t would have been obvious to use [Redford's] cleaning flange 60 as a conventional hole saw because Redford explicitly states that the cleaning flange 60 "is essentially a hole saw" . . . [and that] one of ordinary skill in the art would have found it obvious to use Redford's cleaning flange as a conventional hole saw.

Id. at 27 (citing: Ex. 1003, 4:61–63; Ex. 1002 ¶ 15).

In presenting this ground of unpatentability, however, Petitioner does not otherwise propose a modification to Redford's cleaning flange *60*, such as the one presented above with respect to the anticipation ground. *Compare* Pet. 26–27, *with id.* at 19. Nevertheless, in its Reply Brief, Petitioner asserts that "one of ordinary skill would have found it obvious to adapt the Redford hole saw design for use with an arbor or other well-known drive mechanism." Pet. Reply 18. Further, Patent Owner assumes that Petitioner intended to modify Redford in the same manner as proposed in the anticipation ground. *See* PO Resp. 19 ("Petitioner suggests two proposed modifications to the cleaning flange of Redford."). Accordingly, we give Petitioner the benefit of the doubt and we assume that Petitioner intended to modify Redford's cleaning flange *60* as explained *supra* in the anticipation ground (Pet. 19), and we address each of these proposed modifications below.

a. "Connectable to a Different Drive Structure"

As explained above, Petitioner argues that once cleaning flange *60* is removed from nut driver *40*, "it would have been apparent to a person of ordinary skill in the art that the cleaning flange 60 is *connectable to a different drive*

structure for use as a conventional hole saw." Pet. 19 (emphasis added) (citing Ex. 1002 ¶ 11). Petitioner explains that "a hole saw arbor could have been threaded or otherwise attached to the stem extending upward from the cleaning flange 60." *Id.*; *see also* Ex. 1002 ¶ 11 (Mr. Pangerc testifying that "a hole saw arbor could have been threaded or otherwise attached to the stem extending upward from the cleaning flange 60 (i.e., the structure that received the body 20)"). In its Reply Brief, Petitioner further asserts that Patent Owner's own "expert testified that by the '554 patent's priority date, it would have been obvious to incorporate such structures into a hole saw." Pet. Reply Br. 18 (citing Ex. 1008, 36:5–17).

In contesting this proposed modification, Patent Owner argues that "[e]ven if the nut driver were removed from Redford's tool, one of ordinary skill in the art would find it easiest to just retain the pin 54 and body 20 to drive the cleaning flange 60." PO Resp. 25 (citing Ex. 2004 ¶ 53; Ex. 2006 ¶ 61). Patent Owner's expert, Mr. Vallee, testifies that:

> once the cleaning flange 60 is removed from the nut driver 40, it is not apparent to a person of ordinary skill in the art that the Redford device could be used as a conventional hole saw for a number of reasons[, including,] there is no portion of the cleaning flange 60 that can be easily connected to a rotating device which could be used to spin the cutting teeth.

Ex. 2004 ¶ 53. Patent Owner further explains that "modifying the cleaning flange 60 for mating with an alternate drive structure (e.g., an arbor) requires additional manufacturing and reinforcement of the stem/body 20." PO Resp. 25 (citing Ex. 2006 ¶ 63 (Mr. Novak testifying that "[s]uch a modification would be significant and require additional manufacturing and reinforcement of the stem/body 20")).

Patent Owner's argument is persuasive. Petitioner provides insufficient reasoning as to why a person of ordinary skill in the art would have added a second, alternate drive structure to Redford's cleaning flange *60*, when Redford

already discloses a drive structure that utilizes pin *54* for attaching body *20* to cleaning flange *60*. Petitioner's proposed modification of Redford's cleaning flange *60* appears to be premised on an impermissible use of hindsight after review of the '554 Patent, rather than on a supported reason to modify Redford's cleaning flange *60*. *See KSR Int'l Co. v. Teleflex Inc.*, 550 U.S. 398, 421 (2007) (stating that the fact finder must be aware "of the distortion caused by hindsight bias and must be cautious of arguments reliant upon *ex post* reasoning").

We also find unpersuasive Petitioner's argument that Patent Owner's own "expert testified that by the '554 patent's priority date, it would have been obvious to incorporate such structures into a hole saw" (Pet. Reply 18 (citing Ex. 1008, 36:5–17)). Here, Patent Owner's expert (Mr. Vallee) simply answered "Yes" in response to the question, "[y]ou would agree that at the time of the ['554 patent] it was obvious that you would have a mandrel and use a power drill to operate a hole saw, correct?" Ex. 1008, 36:5–17. The issue is not whether it would have been obvious to add a mandrel to *any* hole saw so that it can be driven by a power drill, as posed by the question; rather, the issue is whether it would have been obvious to modify Redford's cleaning flange *60*—which already uses a pin-type attachment mechanism—to include a second attachment mechanism that would avoid the use of the pin.

For at least these reasons, we are not persuaded that Petitioner has established by a preponderance of the evidence that the claimed subject matter would have been obvious over Redford under this first theory.

b. "Driven by the Same Body 20 and Pin 54"

As explained above, Petitioner also argues, "[a]lternatively, the cleaning flange 60 could have been attached to and driven by the same body *20* and pin 54 as before, but without the nut driver 40." Pet. 19 (citing Ex. 1002 ¶ 11).

For the same reason that we are not persuaded that the claims are anticipated by Redford under this second theory, we are also unpersuaded that the claims are obvious over Redford. In particular, pin *54* occupies either upper depression *53* or lower depression *55* of S-shaped channel *56*, thereby preventing these depressions from satisfying the claimed first and second "fulcrums" (claim 1) and first and second "means for engaging a lever" (claim 24).

For at least this reason, we are not persuaded that Petitioner has established by a preponderance of the evidence that the claimed subject matter would have been obvious over Redford under this second theory.

3. Obviousness Ground Based on Redford and Starbuck

In relying on Starbuck, Petitioner asserts that Starbuck's slots *22* "exemplify a conventional, well-known slot configuration in a hole cutter." Pet. 31 (citing Ex. 1002 ¶ 22). Petitioner reasons that it would have been obvious to add Starbuck's slots *22* to Redford's cleaning flange *60* because "such a combination simply involves the use of a known technique *to improve a similar device* in the same way, with predictable results" and, furthermore, the combination would "aid in the removal of the cuttings," as taught by Starbuck. *Id.* at 31–32 (emphasis added) (citations omitted). Petitioner further reasons that it would have been obvious to merge Redford's S-shaped channel *56* with Starbuck's slots *22* "in order to reduce the number of slots that need to be machined . . . thus reducing manufacturing cost and improving the sidewall strength of the hole saw." *Id.* at 32 (citing Ex. 1002 ¶ 25).

To explain this proposed combination, Petitioner provides the following illustration (*id.*):

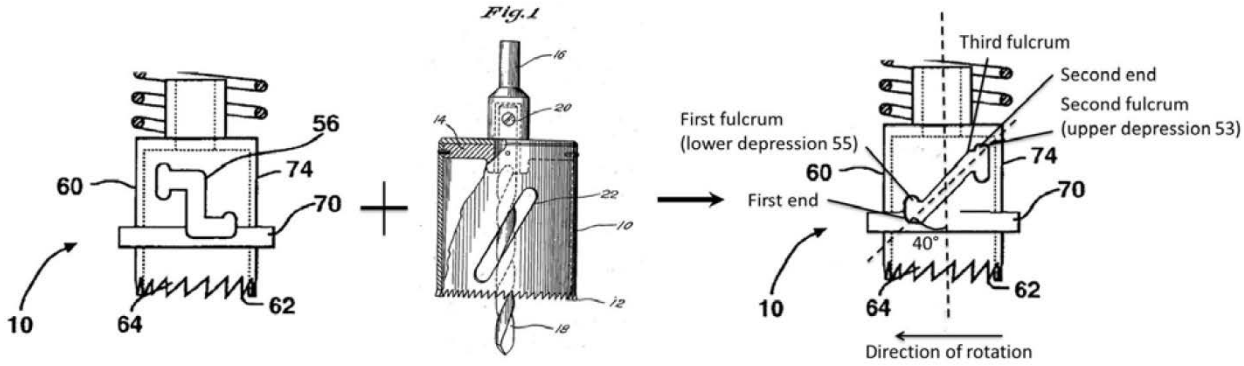

Redford modified in view of Starbuck

The above-left figure illustrates Redford's cleaning flange *60*, the middle figure depicts Starbuck's trepanning tool *10*, and the right figure depicts Petitioner's proposed combination. *Id.*

In contesting this ground, Patent Owner argues that a person of ordinary skill in the art would not have combined Redford's cleaning flange *60* with Starbuck's trepanning tool *10*, as Petitioner has done. PO Resp. 40. Patent Owner argues that Petitioner's proposed combination is a result of impermissible hindsight. *Id.* at 43.

We find Patent Owner's arguments persuasive. Petitioner's reasoning for combining Redford's cleaning flange *60* with Starbuck's trepanning tool *10* is that "such a combination simply involves the use of a known technique to improve a *similar device* in the same way, with predictable results." Pet. 31–32 (emphasis added) (citations omitted). Petitioner's reasoning is premised on an unsupported assertion that Redford's cleaning flange *60* is "a similar device" to Starbuck's trepanning tool *10*. *Id.*

Redford and Starbuck are to be viewed as they would have been viewed by one of ordinary skill. *Kimberly-Clark v. Johnson & Johnson*, 745 F.2d 1437, 1454 (Fed. Cir. 1984); *In re Mercier*, 515 F.2d 1161, 1165 (CCPA 1975). In *In re*

Wesslau, 353 F.2d. 238 (CCPA 1965), the Court emphasized:

> It is impermissible within the framework of section 103 to pick and choose from any one reference only so much of it as will support a given position, to the exclusion of other parts necessary to the full appreciation of what such reference fairly suggests to one of ordinary skill in the art.

353 F.2d at 241.

In the present case, we disagree with Petitioner's assertion that Redford is "*directed* to hole cutters." Pet. 32 (emphasis added) ("Redford and Starbuck are both directed to hole cutters with slots"). Rather, we agree with Patent Owner's characterization that "Redford is directed to a combined nut recess cleaner and nut driver tool [ ]." PO Resp. 40 (citing Ex. 1003, at (54)).

Although Redford describes its cleaning flange as "essentially a hole saw" (Ex. 1003: 4:61–63) and that it "can comprise a hole saw" (*id.* at 2:19–20), this does not support an assertion that Redford is *directed to* hole cutters. Petitioner's position ignores Redford's extensive disclosure of "[a] combined nut area cleaner and nut driver tool for manipulating nuts residing in recesses prone to filling with environmental debris." *See, e.g.*, *id.* at (57). One of ordinary skill in the art would have understood that Redford is directed to a manually driven tool for removing a nut, which includes a retractable cleaning flange for cleaning debris, such as dirt, that accumulates around the nut. *See, e.g.*, *id.* at (54), 5:10–13, Figs. 1, 2, 5, 6; *see also* Ex. 2006 ¶ 49 (Mr. Novak testifying that "one of skill in the art would understand [that Redford's] reference to a 'hole saw' is merely being a reference point for a hollow cylindrical structure . . . for the purpose of cleaning"); *see also id.* at ¶ 58 (Mr. Novak testifying that "one of ordinary skill in the art of designing hole saws would immediately discount Redford because it is a device for cleaning, not cutting, and is manually [driven] rather than power driven"); *see also* Ex. 2004

¶ 55 (Mr. Vallee testifying that "[t]he term 'essentially a hole saw' does not mean that [Redford's cleaning flange *60*] functions like a hole saw"). In presenting its reasoning for combining Redford with Starbuck, Petitioner is picking and choosing Redford's brief characterization of the cleaning flange as "a hole saw" to support its position, to the exclusion of other parts necessary for the full appreciation of what Redford fairly suggests to one of ordinary skill in the art. *See Wesslau*, 353 F.2d at 241. Accordingly, we are not persuaded that a person of ordinary skill in the art would combine Redford's cleaning flange *60*—which is a part of Redford's nut driver tool *10* and is used for cleaning dirt and other debris that accumulates around a nut—with Starbuck's trepanning tool *10*, as Petitioner proposes. Pet. 32.

Moreover, we also find unpersuasive Petitioner's reasoning that it would have been obvious to merge Redford's S-shaped channel *56* with Starbuck's slots *22* to arrive at the proposed modification.

As argued by Petitioner, a person of ordinary skill in the art allegedly would have combined Redford's cleaning flange *60* with Starbuck's trepanning tool *10* to aid in cutting removal, to reduce cost, and to improve strength. *See* Pet. 31–33; *see also* Ex. 1002 ¶¶ 24–25 (Mr. Pangerc testifying that it would have been obvious to combine Redford and Starbuck "to aid in the removal of cuttings" and "in order to reduce the number of slots . . . thus reducing manufacturing cost and improving sidewall strength"). As argued correctly by Patent Owner, however, Petitioner's reasoning fails to address adequately "how Redford's S-shaped channel 56 and Starbuck's slot 22 would be combined to result in the configuration that . . . preserves the alleged 'third fulcrum' shown in the proposed figure." PO Resp. 49. Based on the evidence before us, it is not apparent why a person of ordinary skill in the art would maintain the "third fulcrum," as the proposed modification seeks to straighten Redford's S-shaped channel *56*. *See* Ex 2004 ¶ 69 (Mr. Vallee testifying

that the "claimed third fulcrum serves no practical purpose in the aperture shown").

Furthermore, Petitioner's argument—in its Reply Brief—that "preserving Redford's third fulcrum . . . shown above would involve no more than routine duplication of existing parts [] with predictable results and no patentable significance" is also unpersuasive, as it is conclusory and inadequately supported by evidence. Pet. Reply 23–24 (citing only case law, the '554 patent, and Patent Owner's own expert). Although Petitioner's expert testifies that "it would have been obvious . . . to position the third fulcrum midway between [Redford's] fulcrums 53, 55 in order to create evenly spaced steps" (Ex. 1002 ¶ 14), this testimony is inapposite to the proposed location of the "third fulcrum" provided above, which is not midway between Redford's "fulcrums" *53, 55*. We, instead, determine that the only credible reason that emerges from the record before us for keeping the third fulcrum in the manner proposed by Petitioner is based on impermissible hindsight. We also credit the testimony of Patent Owner's expert, Mr. Novak, to that effect. *See* Ex. 2006 ¶ 77 (Mr. Novak testifying that "[t]he only possible reason that one of skill in the art might keep this additional surface would be if that person recognized the need for at least three fulcrums within the aperture by reading the '554 patent").

For at least these reasons, we are not persuaded that Petitioner has established by a preponderance of the evidence that the claims would have been obvious over Redford and Starbuck.

III. PATENT OWNER'S MOTION TO EXCLUDE

Patent Owner filed a Motion to Exclude certain stated opinions of Mr. Pangerc. Paper 25; *see also* Paper 38 (Patent Owner's Notice of Withdrawal of

Portions of Its Motion to Exclude Evidence Under 37 C.F.R. § 42.64). In response to Patent Owner's Motion, Petitioner filed an Opposition. Paper 28.

The party moving to exclude evidence bears the burden of proving that it is entitled to the relief requested—namely, that the material sought to be excluded is inadmissible under the Federal Rules of Evidence. *See* 37 C.F.R. §§ 42.20(c), 42.62(a).

Patent Owner seeks exclusion of "the figure in paragraph 24" of Mr. Pangerc's declaration (Paper 38, 1), as the testimony "was not developed using reliable principles and methods, but was instead based on Pangerc's post-hoc, insufficiently considered adoption of hindsight reconstruction drawings previously prepared by counsel" (Paper 25, 1).

In response to Patent Owner's Motion, Petitioner argues, *inter alia*, that "at most, [Patent Owner's] arguments pertain to weight, not admissibility, of the challenged portions of [Mr. Pangerc's declaration]." Paper 28, 6.

Petitioner's argument is persuasive. Patent Owner's arguments are directed to the weight we should accord Mr. Pangerc's testimony, rather than its admissibility. It is within our discretion to assign the appropriate weight to the testimony offered by Mr. Pangerc. *See, e.g.*, *Yorkey v. Diab*, 601 F.3d 1279, 1284 (Fed. Cir. 2010) (holding the Board has discretion to give more weight to one item of evidence over another "unless no reasonable trier of fact could have done so"); *In re Am. Acad. of Sci. Tech Ctr.*, 367 F.3d 1359, 1368 (Fed. Cir. 2004) ("[T]he Board is entitled to weigh the declarations and conclude that the lack of factual corroboration warrants discounting the opinions expressed in the declarations.").

Accordingly, Patent Owner's motion is denied.

IV. CONCLUSION

We determine that Petitioner has not shown by a preponderance of the evidence that: (1) claims 1, 3–5, 14–18, 20, 22–28, 32, 34, 36, and 37 of the ’554 patent are unpatentable as anticipated by Redford; (2) claims 1–5, 14–20, 23–28, 30–34, and 37 of the ’554 patent are unpatentable as obvious over Redford; or (3) claims 2, 6–13, 21, 29, 33, and 35 of the ’554 patent are unpatentable as obvious over Redford and Starbuck.

V. ORDER

In consideration of the foregoing, it is hereby:

ORDERED that: (1) claims 1, 3–5, 14–18, 20, 22–28, 32, 34, 36, and 37 of the ’554 patent have not been shown to be unpatentable as anticipated by Redford; (2) claims 1–5, 14–20, 23–28, 30–34, and 37 of the ’554 patent have not been shown to be unpatentable as obvious over Redford; and (3) claims 2, 6–13, 21, 29, 33, and 35 of the ’554 patent have not been shown to be unpatentable as obvious over Redford and Starbuck;

FURTHER ORDERED that Patent Owner’s Motion to Exclude portions of Mr. Pangerc’s Declaration is denied, and

FURTHER ORDERED that this is a Final Written Decision. Parties to the proceeding seeking judicial review of the decision must comply with the notice and service requirements of 37 C.F.R. § 90.2.

PETITIONER:

Kevin P. Moran
kpmoran@michaelbest.com

David J. Trautschold
djtrautschold@michaelbest.com

Andrew T. Dufresne
atdufresne@michaelbest.com

J. Donald Best
jdbest@michaelbest.com

PATENT OWNER:

Gregory J. Carlin
gcarlin@mcciplaw.com
litdocketing@mcciplaw.com

Jessica Keesee
jkeesee@mcciplaw.com

John W. Harbin
jharbin@mcciplaw.com