Trials@uspto.gov
571-272-7822

Paper 16
Date Entered: April 14, 2016

UNITED STATES PATENT AND TRADEMARK OFFICE

BEFORE THE PATENT TRIAL AND APPEAL BOARD

CORNING OPTICAL COMMUNICATIONS RF LLC,
CORNING INC., and CORNING OPTICAL COMMUNICATIONS LLC,
Petitioner,

v.

PPC BROADBAND, INC.,
Patent Owner.

Case IPR2015-01952
Patent 8,647,136 B2

Before JOSIAH C. COCKS, TRENTON A. WARD, and
WILLIAM M. FINK, *Administrative Patent Judges.*

FINK, *Administrative Patent Judge.*

DECISION
Denying Institution of *Inter Partes* Review
37 C.F.R. § 42.108

I. INTRODUCTION

Corning Optical Communications RF LLC, Corning Incorporated, and Corning Optical Communications LLC (collectively, "Petitioner") filed a Corrected Petition requesting an *inter partes* review of claims 27, 30 and 34–38 of U.S. Patent No. 8,647,136 B2 (Ex. 1001, "the '136 patent"). Paper 10 ("Pet."). Patent Owner, PPC Broadband Incorporated, filed a Preliminary Response. Paper 13 ("Prelim. Resp."). We have jurisdiction under 35 U.S.C. § 314, which provides that an *inter partes* review may not be instituted "unless . . . the information presented in the petition . . . and any response . . . shows that there is a reasonable likelihood that the petitioner would prevail with respect to at least 1 of the claims challenged in the petition."

For the reasons that follow, we determine that Petitioner has not established a reasonable likelihood of prevailing with respect to claims 27, 30 and 34–38 of the '136 patent. Accordingly, we deny the Petition and do not institute an *inter partes* review.

A. Related Matters

Petitioner and Patent Owner identify the following pending matters as relating to the '136 patent: *PPC Broadband, Inc. v. Corning Optical Communications RF, LLC.*, No. 5:14-CV-01170 (N.D.N.Y.); *PPC Broadband, Inc. v. Corning Gilbert Inc.*, No. 5:13-cv-1310 (N.D.N.Y); *PPC Broadband, Inc. v. Corning Gilbert Inc.*, No. 5:12-cv-00911 (N.D.N.Y.); *PPC Broadband, Inc. v. Corning Gilbert Inc.*, No. 5:13-cv-00538 (N.D.N.Y); *In the Matter of Certain Coaxial Cable Connectors and Components Thereof and Products Containing Same*, Inv. No. 337-TA-938

(U.S.I.T.C.); U.S. Patent Interference No. 105,680; and Reexamination Control No. 95/002,246 and 95/002,400. Pet. 2–3; Paper 6, 1–3.

In addition to IPR2015-01955, also challenging certain claims of the ’136 patent, Petitioner and Patent Owner identify eight additional *inter partes* reviews concerning patents related to the ’136 patent: IPR2013-00346, IPR2013-00347, IPR2013-00343, IPR2013-00342, IPR2014-00441, and IPR2014-00440. Pet. 2–3; Paper 6, 2–3. Petitioner and Patent Owner identify the following appeals in the United States Court of Appeals for the Federal Circuit as concerning a number of these *inter partes* reviews: *Corning Optical Communications RF, LLC v. PPC Broadband, Inc.*, Case Nos. 2015-1361, -1366, -1368, -1369 (Fed. Cir. February 22, 2016) (affirming-in-part, vacating-in-part and remanding final written decisions in IPR2013-00340, -00345, -00346, and -00347); and *Corning Optical Communications RF, LLC v. PPC Broadband, Inc.*, Case No. 2015-1364 (Fed. Cir. February 22, 2016) (vacating and remanding final written decision in IPR2013-00342). Pet. 2–3; Paper 14, 1.

B. The ’136 Patent

The ’136 patent relates to “coaxial connectors having electrical continuity members that extend continuity of an electromagnetic interference shield from the cable through the connector.” Ex. 1001, 1:20–22. When a coaxial connector is not properly tightened or improperly installed, a loss of ground and discontinuity may occur between the connector and interface port. *Id.* at 1:43–57. The continuity member mitigates this problem by “physically and electrically” contacting both the nut and the post, “thereby extending ground continuity between

components." *Id.* at 13:46–51. Figure 5 of the '136 patent is reproduced below:

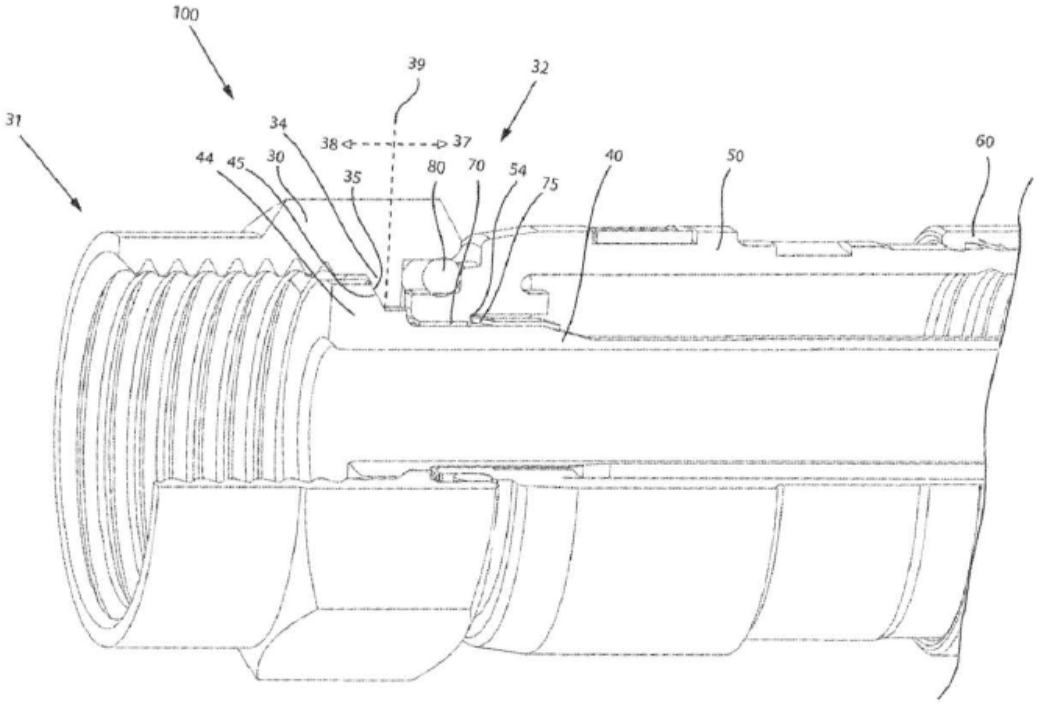

FIG. 5

Figure 5 of the '136 patent depicts a cut-away view of the elements of assembled coaxial cable connector 100 having electrical continuity member 70. *Id.* at 5:66–6:1, 12:13–17. The assembled coaxial connector comprises threaded nut 30, post 40, connector body 50, continuity member 70, and connector body sealing member 80. *Id.* at 7:10–16, 8:8–15. The post may comprise flange 44, such as an externally extending annular protrusion, located at the end of the post. *Id.* at 8:8–10. The flange 44 includes a rearward facing surface 45 that faces the forward facing surface 35 of the nut. *Id.* at 8:10–13. The nut is free to rotate, and has some freedom for axial movement with respect to the connector body. *Id.* at 18:1–3. The continuity

member is located at the rearward end of the nut, and "physically and electrically contacts both the nut 30 and the post 40, thereby extending ground continuity between the components." *Id.* at 13:46–51.

C. Illustrative Claim

Claim 27 is an independent claim. Claims 30 and 34–38 depend from claim 27. Claim 27 is reproduced below.

> 27. A connector for coupling a coaxial cable to an interface port, the connector comprising:
>
> a body having a forward end, an opposing rearward end configured to receive a portion of the coaxial cable, and a continuity member contact portion;
>
> a post configured to engage the body, the post including an outward flange including a protrusion having a rearward facing surface;
>
> a nut configured to move between a first position and a second position, the nut including:
>
> a first end configured for coupling to the interface port;
>
> an opposing second end; and
>
> an inward protrusion comprising:
>
> a forward facing nut surface;
>
> a rearward facing nut surface; and
>
> an innermost nut surface extending between the forward facing nut surface and the rearward facing nut surface;
>
> wherein the nut is further configured to move between a first nut-to-post position relative to the post, where the forward facing nut surface of the nut contacts the rearward facing surface of the post, and a second nut-to-post position relative to the post, where the forward facing nut surface of the nut is spaced away from the rearward facing surface of the post;

> a continuous metallic electrical ground pathway located rearwardly from the rearward facing surface of the inward protrusion of the nut, and extending between the rearward facing surface of the protrusion of the outward flange of the post and the continuity member contact portion of the body; and
>
> wherein the continuous metallic electrical ground pathway is configured to be maintained when the nut is in the first position, when the nut is in the second position, when the nut is in the first nut-to-post position relative to the post, where the forward facing nut surface of the nut contacts the rearward facing surface of the post, and when the nut is in the second nut-to-post position relative to the post, where the forward facing nut surface of the nut is spaced away from the rearward facing surface of the post, such that the continuous metallic electrical ground pathway is maintained between the post and the nut regardless of a location of the nut relative to the post.

Ex. 1001, 27:9–52.

D. Asserted Ground of Unpatentability

Petitioner asserts that claims 27, 30, and 34–38 are unpatentable based on the following ground:

References	**Basis**	**Challenged Claims**
Matthews[1], Tatsuzuki[2], Burris[3] and Bence[4]	§ 103(a)	27, 30, and 34–38

[1] U.S. Patent Application Publication No. 2006/0110977, published May 25, 2006 (Ex. 1002) ("Matthews")
[2] Japanese Publication No. 2002-15823 (Ex. 1017) ("Tatsuzuki") (English Translation at Ex. 1003).
[3] U.S. Patent No. 5,975,951, issued November 2, 1999 (Ex. 1004) ("Burris")
[4] U.S. Patent No. 7,114,990, issued October 3, 2006 (Ex. 1005) ("Bence")

II. DISCUSSION

A. Claim Interpretation

In an *inter partes* review, claim terms in an unexpired patent are given their "broadest reasonable construction in light of the specification of the patent in which they appear." 37 C.F.R. § 42.100(b); *see also In re Cuozzo Speed Techs., LLC*, 793 F.3d 1268, 1278–79 (Fed. Cir. 2015) ("Congress implicitly approved the broadest reasonable interpretation standard in enacting the AIA," and "the standard was properly adopted by PTO regulation"), *cert. granted sub nom. Cuozzo Speed Techs., LLC v. Lee*, 136 S. Ct. 890 (mem.) (2016). Under the broadest reasonable construction standard, claim terms are given their ordinary and customary meaning, as would be understood by one of ordinary skill in the art in the context of the entire disclosure. *In re Translogic Tech., Inc.*, 504 F.3d 1249, 1257 (Fed. Cir. 2007).

"spaced away"

Petitioner proposes the term "spaced away," recited in independent claim 27 be construed as "at least a portion of the forward facing surface of the nut is physically separated and not in contact with at least a portion of the rearward facing surface of the post." Pet. 28 (citing Ex. 1001, 18:1–8). Patent Owner contends the term "spaced away" means "the forward facing nut surface of the nut . . . is physically separated from and not in contact with the rearward facing surface of the post" and relies on the claims themselves as support. Prelim. Resp. 8–10.

Patent Owner does not dispute that "spaced away" means "not in contact with," but disputes Petitioner's "further language that would allow

the two surfaces to contact each other even in the second ('spaced away') position by only requiring that 'at least a portion' of the two surfaces be separated from and not contact each other." Prelim. Resp. 9. Patent Owner argues this construction is inconsistent with the claims and the specification. *Id.* at 10.

For purposes of this Decision, we agree with the undisputed portion of Petitioner's proposal that "spaced away" means "physically separated from and not in contact with." However, we disagree such physical separation only needs to apply to "at least a portion of the forward facing surface of the nut," as Petitioner alone contends. First, Petitioner's single cite to the specification does not provide support for such an interpretation. Moreover, such a qualification is not consistent with the language of the claim itself, which uses "contact" between the claimed nut and post surfaces to describe a first nut-to-post position and "spaced away" to describe a second nut-to-post position. Ex. 1001, 27:28–34. Under Petitioner's construction, however, there could be some contact (i.e., the at least a portion of not separated) between the respective surfaces that is encompassed by the claimed "spaced away." That would lead to the nonsensical result that term claim term "contact" does not encompass all instances of actual contact between the respective surfaces and that "spaced away" encompasses instances of actual contact. Accordingly, we decline to include the "at least a portion of" language proposed by Petitioner.

remaining terms

Petitioner proposed construction of the terms "nut configured to move between" and "nut is configured to move between," Pet. 24–25, "rearward facing surface of the protrusion of the outward flange of the post" and "the

rearward facing surface of the post," Pet. 25–28, and "continuous metallic electrical ground pathway," Pet. 28–32. Patent Owner disputes Petitioner's proposed constructions. Prelim. Resp. 4–8, 10–16.

We have reviewed the parties' contentions and, in view of our determination below, do not discern how construing these terms is necessary to resolving the disputed issues before us. We therefore determine that no specific construction of these terms is necessary.

B. Alleged Obviousness of Claims 27, 30 and 34–38

Petitioner contends claims 27, 30 and 34–38 are obvious over the combination of Matthews, Tatsuzuki, Burris, and Bence. Pet. 33–59. Petitioner also relies upon its proffered declarant, Ronald P. Locati, to support its contentions. Ex. 1006. We begin our discussion with brief summaries of the references and then address the parties' contentions.

1. Matthews (Ex. 1002)

Matthews generally discloses a coaxial cable connector with at least one conducive member 70. Ex. 1002 ¶ 1. The one or more conducive members facilitate grounding of the coaxial cable. *Id.* ¶ 10. Figure 1 of Matthews is reproduced below:

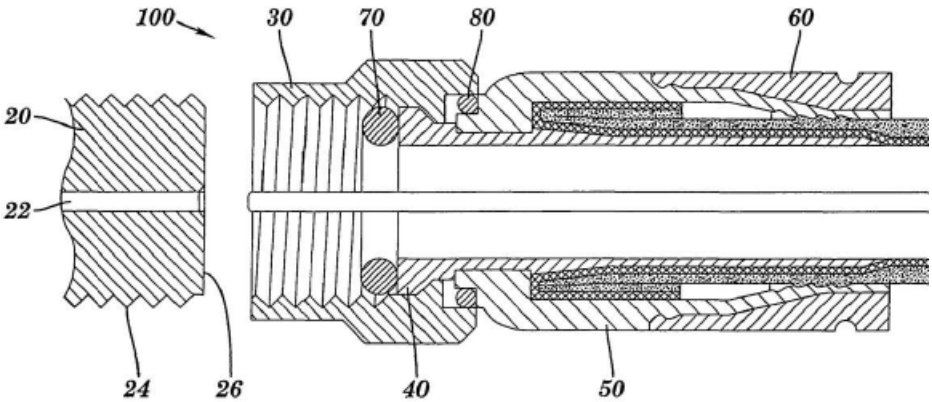

FIG. 1

Figure 1 illustrates a sectional side view of a coaxial cable connector. *Id.* ¶¶ 16, 26. The coaxial cable connector includes threaded nut 30, post 40, connector body 50, mating edge conductive member 70, and connector body conductive member 80. *Id.* ¶ 28. The threaded nut 30 may function to physically secure and advance the connector 100 onto an interface port 20. *Id.* ¶ 29. The threaded nut 30 may be formed of conductive material to facilitate grounding through the nut. *Id.* The connector body conductive member 80 provides an electrical coupling between the nut 30 and connector body 50. *Id.* ¶ 28. This allows for a physical seal and effective electrical contact between the connector body 50 and nut 30. *Id.*

Figure 3 of Matthews is reproduced below:

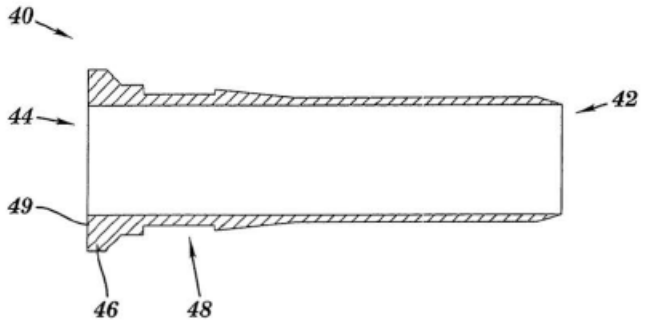

FIG. 3

Figure 3 of Matthews depicts a sectional side view of post 40. *Id.* ¶ 30. The post may include a mating edge 49 that makes electrical contact with the interface port 20 or O-ring 70 to facilitate grounding with the conductive grounding shield. *Id.* The post 40 may comprise an outward flange configured to contact the internal lip of the threaded nut 30. *Id.*

2. Tatsuzuki (Ex. 1003[5])

Tatsuzuki describes a coaxial plug that includes a disc-shaped spring. Ex. 1016 ¶¶ 1, 17. Figure 3 of Tatsuzuki is reproduced below:

[5] We hereinafter refer to the English translation of Tatsuzuki.

[FIG. 3]

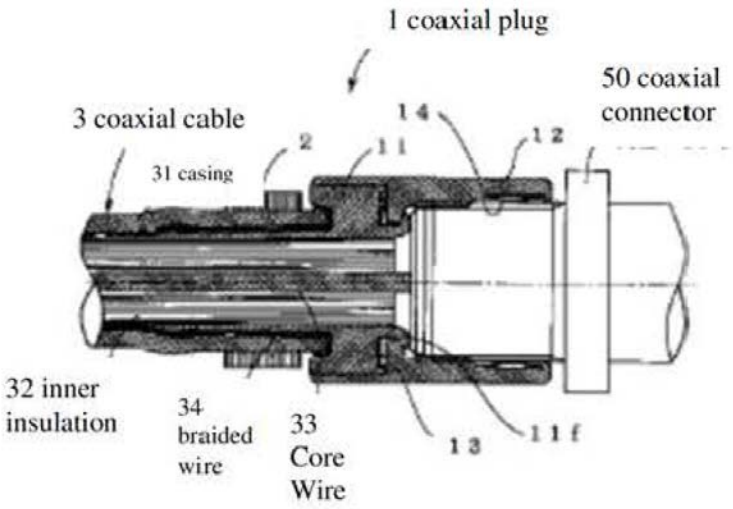

[FIG. 3]
2 caulking ring, 11 main plug, 12 rotary mounting element, 11f curl-processed part, 14 ring-shaped spring,

Figure 3 illustrates a cross-section view of coaxial plug 1 securely installed in a coaxial cable connector 50. *Id.* ¶ 12. The electrical connection is formed between the ring-shaped part 11c and rotary mounting element 12 with the disc-shaped spring 13 interposed between them. *Id.* ¶ 17.

Figures 7(a) and 7 (b) are reproduced below:

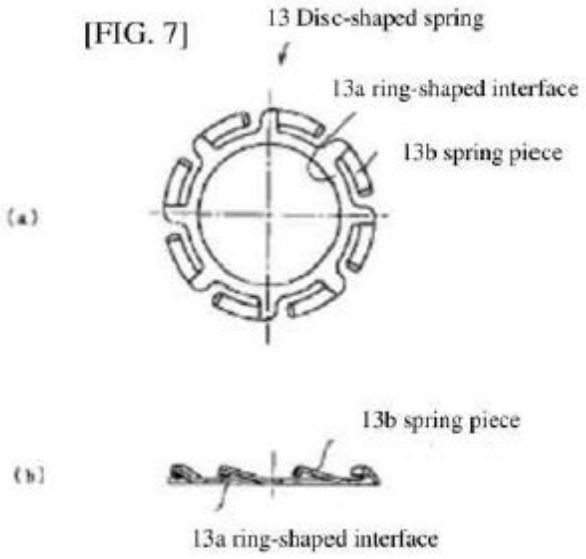

Figures 7(a) and 7(b) illustrate plan view and side view of disc-shaped spring 13, respectively. *Id.* ¶ 17. This disc-shaped spring 13 is formed by a stamp cutout process of a thin metal plate possessing elasticity, e.g., phosphor bronze. *Id.* The disc-shaped spring 13 includes spring piece 13b and ring-shaped joining part 13a. *Id.*

3. Burris (Ex. 1004)

Burris discloses a coaxial cable connector with O-ring seals to impede moisture from outdoor installations. Ex. 1004, 1:7–11. Figures 3 and 4 of Burris are reproduced below:

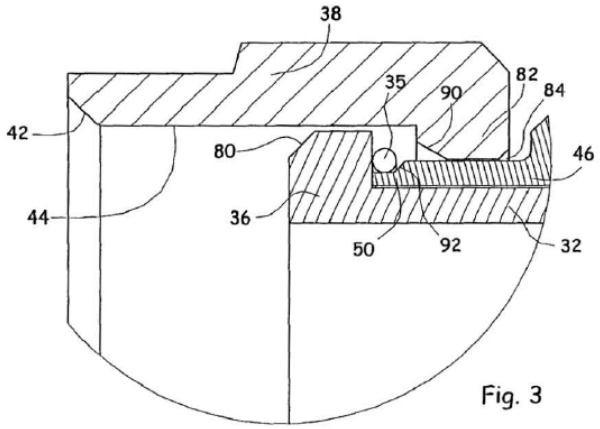

Fig. 3

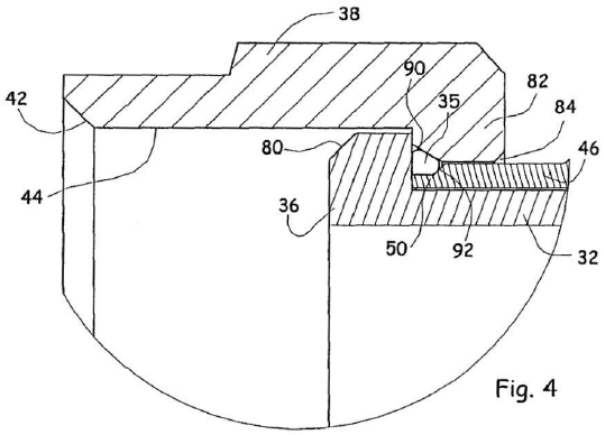

Fig. 4

Figures 3 and 4 depict the same coaxial connector in two different positions relative to the threaded terminal, before fully-tightened and fully-tightened, respectively. *Id.* at 4:44–51. In Figure 3, shoulder 80 of tubular post 32 is moved slightly away from inwardly directed collar 82 of the nut 38 before being fully tightened. *Id.* at 6:5–10. When the nut is fully tightened on the threaded terminal, as shown in Figure 4, the O-ring 35 forms a seal between nut 38 and tubular post 32. *Id.* at 6:23–27.

4. Bence (Ex. 1005)

Bence discloses another type of electrically conductive grounding member in a coaxial cable connector. Ex. 1005, 3:1-5, 3:14–16. Figures 6A–6C are reproduced below:

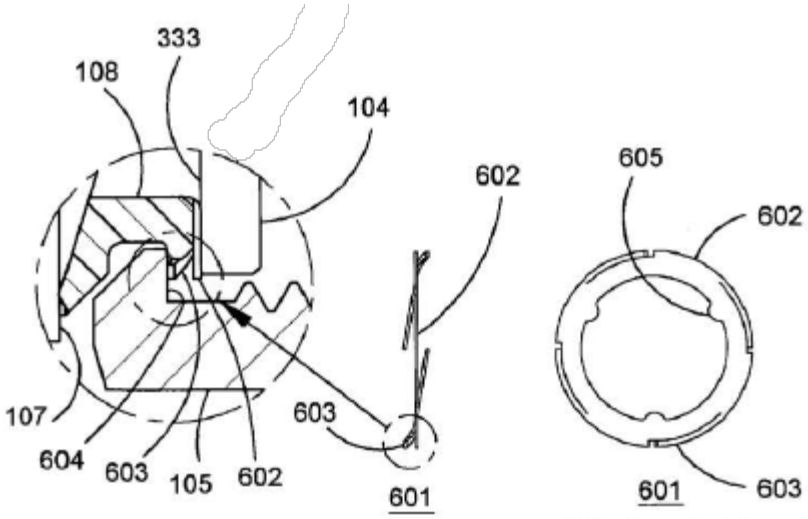

FIG. 6A FIG. 6B FIG. 6C

Figure 6A illustrates a coaxial cable with the grounding member. *Id.* at 4:48–51. Figures 6B and 6C illustrate an enlarged view of the grounding member in a side view and plan view, respectively. *Id.* at 4:52–56. This grounding member engages both tubular post 104 and coupling nut 105 in order to provide an electrically-conductive path. *Id.* at 3:16–18. The spring action of fingers 603 make contact with radial surface 604 near the back end of coupling nut 105 that faces the front end of coupling nut 105. *Id.* at 8:10–14. This serves as a ground path from the coupling nut to the tubular post while allowing the nut to rotate. *Id.*

5. Analysis

Petitioner presents a proposed mapping of Matthews, Tatsuzuki, Burris, and Bence to the limitations of claims 27, 30, and 34–38. Pet. 34–47; *see also* Ex. 1006 ¶¶ 83–113. For example, Petitioner contends that the recited "body," "post configured to engage the body," and "nut" of claim 27 are respectively taught by body 50, post 40, and nut 30 of the coaxial connector 100 of Matthews, as shown, for example, in Figure 1 of Matthews (reproduced above). Pet. 34–36 (citing, e.g., Ex. 1002, Figs. 1, 7). Although Petitioner contends Matthews teaches continuity members, Petitioner relies on Tatsuzuki as teaching the recited "continuous metallic electrical ground pathway," of claim 27. *Id.* at 38–41 (citing, e.g., Ex. 1003 ¶¶ 15, 17, 19, 20, Figs. 3, 7). Petitioner relies on Burris as teaching moving the nut axially between a first and second nut-to-post position,[6] *id.* at 38 (citing, e.g., Ex. 1004, Figs. 3–4), and Bence as teaching the placement of the continuous metallic electric ground pathway between the claimed surfaces of the post and the body, *id.* at 41–42 (citing, e.g., Ex. 1005, Figs. 6A–6C), even when the nut moves axially, *id.* at 43.

Petitioner also proposes a rationale for combining the foregoing references to obtain the claimed invention. Pet. 47–58; *see also* Ex. 1006 ¶¶ 114–161. Petitioner provides the following annotated illustration of the proposed modifications to Matthews:

[6] According to Petitioner and its declarant, nut 30 of Matthews is also inherently "configured to move between a first position and second position," during the threading of the nut onto interface port 20. *Id.* at 35–36 (citing Ex. 1002 ¶¶ 29, 41, 44, Fig. 2; Ex. 1006 ¶ 90).

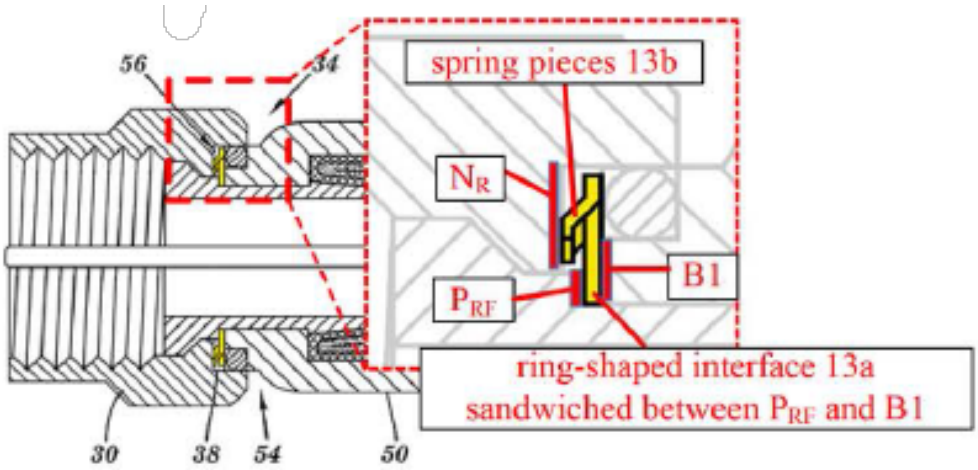

Obvious Modification of Matthews (Ex. 1006 at ¶ 114)

Modified Figure 8 of Matthews above represents Petitioner's proposed modification of Matthews according to the teachings of Tatsuzuki and Bence. *Id.* at 47–48.

According to Petitioner:

> It would have been obvious to modify the Matthews connector by incorporating the continuity member 13 of Tatusuzki in the manner disclosed by Bence, *i.e.*, by sandwiching a portion of the continuity member 13 of Tatsuzuki between the body and post of Matthews, as shown in FIG. 6A of Bence. Such modification would include dimensioning the components of the Matthews connector (e.g., the body, post and nut) to accommodate Tatsuzuki's continuity member 13, as taught by Bence.

Pet. 47 (citing Ex. 1006 ¶ 114); *see also id.* at 51 (explaining the "sandwiching" technique of Bence). Petitioner further contends it would have been obvious to have a nut capable of moving between the first and second nut-to-post positions, as taught by Burris, to allow for flexible movement and rotation of the nut relative to the post and body. *Id.* at 52–53 (citing Ex. 1004, 6:2–12).

Patent Owner disputes Petitioner's proposed combination. Prelim. Resp. 28–60. Among other reasons, Patent Owner contends

> the claimed ’136 Patent invention is directed to a continuity member or path that is configured in a new gap or space “between the rearward facing surface of the protrusion of the outward flange of the post and the continuity member contact portion of the body” (Ex. 1001 Claim 27) that did not exist before.

Id. at 28–29. According to Patent Owner, however, none of the relied-upon references teaches this configuration and Petitioner does not explain sufficiently why a person of ordinary skill in the art, at the time of the invention, would have been motivated to create a new gap to place a continuity member in such a location. *Id*. at 30–38, 46–47.

We are persuaded by Patent Owner’s argument. As explained above, Petitioner and its declarant, Mr. Locati, rely on Figure 6A of Bence for placing the “continuous metallic electrical ground pathway” (i.e., ring-shaped member 13a of Tatsuzuki) between the body (B1), post (P_{RF}), and nut (N_R) of Matthews as indicated in the modified Figure 8 reproduced above. Pet. 47, 51. However, as Patent Owner points out in the following illustration, Bence’s grounding member is forward of the lip of the nut and, therefore, not “***located <u>rearwardly</u> from the <u>rearward facing surface</u>*** of the inward protrusion of the nut,” as claim 27 requires, Prelim. Resp. 34–35:

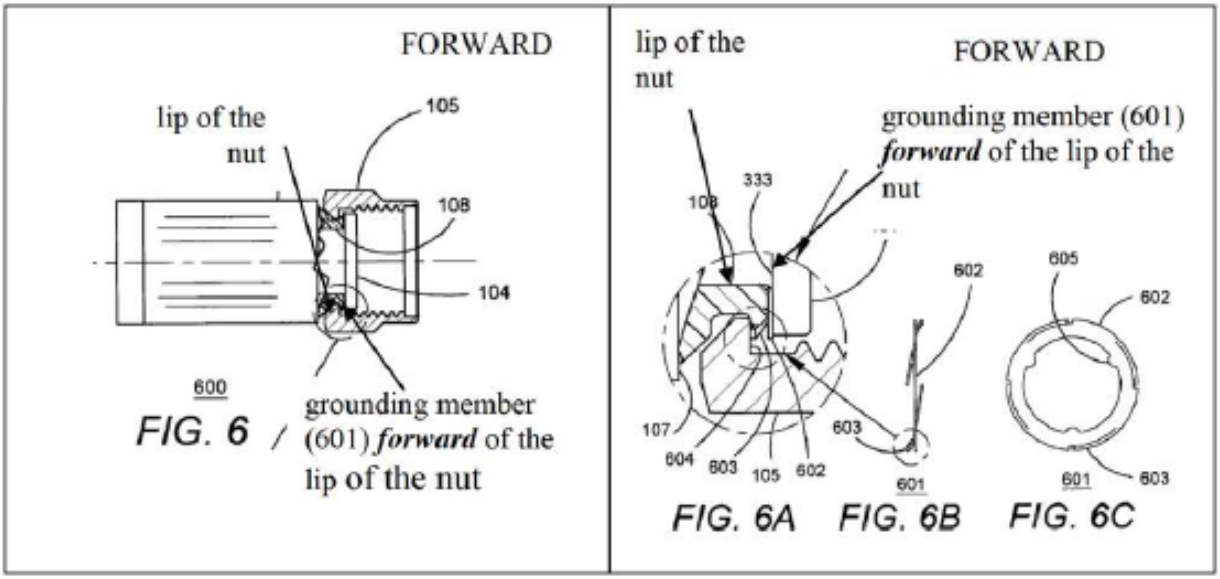

The above Figures 6 and 6A–6C of Bence, as annotated by Patent Owner, illustrate the placement of the grounding member forward of the lip of the nut. Prelim. Resp. 34; *see also* Ex. 1005, 7:62–8:15 ("The spring action of the fingers 603 extend to, and make contact with, a radial surface 604 near the back end of the coupling nut 105 that faces the front end of the coupling nut").

Moreover, we agree Petitioner does not address sufficiently why a person of ordinary skill in the art would have been motivated to rearrange the position of the grounding member to obtain its recited placement "rearwardly from the rearward facing surface of the inward protrusion of the nut, and extending between the rearward facing surface of the protrusion of the outward flange of the post and the continuity member contact portion of the body," when none of the references teach this arrangement. *See KSR Int'l Co. v. Teleflex, Inc.*, 550 U.S. 398, 418 (2006) (citing *In re Kahn*, 441 F.3d 977, 988 (Fed. Cir. 2006)). Indeed, the modification Petitioner argues is obvious would require creating a new space in Matthews where none

currently exists, i.e., between the rearward facing surface of the protrusion of the outward flange of the post, P_{RF}, and the body, B1. Prelim. Resp. 46. Mr. Locati testifies that it would have been obvious to make such a modification, *see* Ex. 1006 ¶¶ 114–118, but bases this on the assertion that a person of ordinary skill would have done so to create an alternate ground path, *id.* ¶ 121. We determine Petitioner's evidence does not support sufficiently this assertion.

We also find Petitioner's combination insufficiently addresses the requirement that

> continuous metallic electrical ground pathway is configured to be maintained when . . . the nut is in the second nut-to-post position relative to the post, where the forward facing nut surface of the nut is *spaced away* from the rearward facing surface of the post, *such that the continuous metallic electrical ground pathway is maintained between the post and the nut regardless of a location of the nut relative to the post*.

Ex. 1001, 27:41–52. As we also discussed, Petitioner relies on alleged inherent disclosures of Matthews and, alternatively, on Burris as teaching the recited spacing. *See* Pet. 37–38. Petitioner relies on the following annotated version of Figure 1 of Matthews:

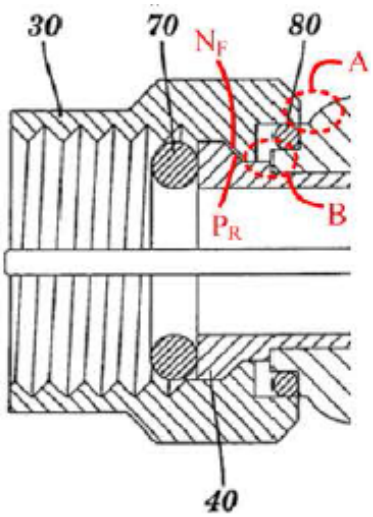

Annotated Figure 1 illustrates how, in Petitioner's view, nut 30 can move axially such that forward facing surface of the nut, N_F, is spaced away from rearward facing surface of the post, P_R, as claim 27 requires.

However, Petitioner does not provide a modified version of Figure 8 that illustrates the second nut-to-post position, requiring N_F and P_R to be spaced away, nor does Petitioner sufficiently explain how the second nut-to-post position is obtained while maintaining continuity between post and nut. If, as Petitioner appears to propose, *see* Pet. 52–53, the nut is moved relative to the post and body (i.e., the nut is "loosened" moving axially to the right), continuity is maintained only if ring member 13 remains sandwiched between the surfaces B1, N_F, and P_R in modified Figure 8 above. *See* Pet. 48–49 (alleging that continuous ground is maintained by "sandwiching" Tatsuzuki's continuity member 13a between P_{RF} and B1). In this scenario, however, spring portion 13b would, as Patent Owner points out, be "crushed flat" because the proposed combination lacks the spring housing channel of Tatsuzuki, which is designed to avoid crushing the spring. Prelim. Resp. 48 (quoting Ex. 1003 ¶ 17).

On the other hand, if the spring is allowed to move axially in response to the rightward movement of the nut (i.e., to avoid being crushed), it would introduce physical separation between surfaces N_F and P_R and continuity member/ring-interface 13a would no longer be "sandwiched" between surfaces B1 and P_{RF} necessary to maintain continuity as the claim requires. *See* Pet. 48–49 (alleging that continuous ground is *maintained* by "sandwiching" Tatsuzuki's continuity member 13a between P_{RF} and B1). In any event, we find Petitioner and its declarant's explanation to be lacking in sufficient detail to establish how its proposed combination satisfies the

requirement that the claimed "continuous metallic electrical ground pathway" be maintained in both first and second nut-to-post positions as claim 27 requires.

For the foregoing reasons, we find the Petitioner's proposed ground of obviousness is deficient with respect to claim 27 of the '136 patent. Accordingly, it is unnecessary to address claims 30 and 34–38, which depend directly or indirectly from claim 27. We decline to institute *inter partes* review on the grounds that claims 27, 30, and 34–38 are unpatentable over the combination of Matthews, Tatsuzuki, Burris, and Bence.

III. CONCLUSION

For the foregoing reasons, we are not persuaded that Petitioner has demonstrated a reasonable likelihood that at least one of the challenged claims of the '136 patent is unpatentable based on the asserted grounds.

IV. ORDER

In consideration of the foregoing, it is

ORDERED that the Petition is *denied*.

FURTHER ORDERED that no *inter partes* review will be instituted pursuant to 35 U.S.C. § 314(a) with respect to any of the challenged claims of the '136 patent on the ground of unpatentability asserted in the Petition.

FOR PETITIONER:

Todd R. Walters
todd.walters@bipc.com

Roger H. Lee
roger.lee@bipc.com

Jonathan R. Bowser
jon.bowser@bipc.com

Kyle K. Tsui
kyle.tsui@bipc.com

FOR PATENT OWNER:

Denis J. Sullivan
dsullivan@barclaydamon.com

Thomas Hoehner
thoehner@barclaydamon.com