Trials@uspto.gov
571-272-7822

Paper 13
Date: June 6, 2016

UNITED STATES PATENT AND TRADEMARK OFFICE

BEFORE THE PATENT TRIAL AND APPEAL BOARD

DEPUY SYNTHES SALES, INC,
Petitioner,

v.

ACANTHA LLC,
Patent Owner.

Case IPR2016-00334
Patent RE43,008 E

Before MEREDITH C. PETRAVICK, MICHAEL J. FITZPATRICK, and TIMOTHY J. GOODSON, *Administrative Patent Judges*.

FITZPATRICK, *Administrative Patent Judge*.

DECISION
Denying *Inter Partes* Review
35 U.S.C. § 314; 37 C.F.R. § 42.108

I. INTRODUCTION

Petitioner, DePuy Synthes Sales, Inc., filed a Petition to institute an *inter partes* review of claims 59–91 of U.S. Patent No. RE43,008 E (Ex. 1001, "the '008 patent") pursuant to 35 U.S.C. § 311(a). Paper 1 ("Pet."). Patent Owner, Acantha, LLC, filed a Preliminary Response pursuant to 35 U.S.C. § 313. Paper 10 ("Prelim. Resp.").[1]

We have authority to determine whether to institute an *inter partes* review. 35 U.S.C. § 314(b); 37 C.F.R. § 42.4(a). Upon consideration of the Petition, and for the reasons explained below, we determine that there is not a reasonable likelihood that Petitioner would prevail with respect to any challenged claim. *See* 35 U.S.C. § 314(a). Accordingly, we deny the Petition.

A. Related Matters

The '008 patent issued December 6, 2011, from an application filed July 15, 2003. The '008 patent is a reissue of U.S. Patent No. 6,261,291 B1 ("the '291 patent"), which had issued July 17, 2001, from an application filed July 8, 1999. The '008 patent has 105 claims, with claims 1–28 having issued in the original '291 patent and claims 29–105 being added during reissue.

---

[1] In the body of the Preliminary Response, Patent Owner refers to itself as Acantha, *Inc.* Prelim. Resp. 1. This appears to be a typographical error, as the Preliminary Response is captioned with Acantha, LLC, as the Patent Owner and was filed by attorneys representing Acantha, LLC. *Id*. at 57. Also, in its mandatory notices, Patent Owner identifies itself as Acantha, LLC. *See* Papers 7, 9.

The parties identify *Acantha LLC v. DePuy Synthes Sales, Inc.*, Civil Action No. 1:15-cv-01257 (E.D. Wis.), as a related judicial matter. Pet. 1; Paper 7, 2. Additionally, Petitioner has filed two separate petitions for *inter partes* review challenging other claims of the ’008 patent. *See* Cases IPR2016-00329; IPR2016-00333.

B. The ’008 Patent

The ’008 patent relates to orthopedic implant assemblies for joining bone segments and methods of using such assemblies. Ex. 1001, 1:11–13. The specification explains that “[a] variety of medical conditions may necessitate the joining of bone segments together, as for example, in the treatment of broken bones, spinal disorders, or the fusion of vertebrae following the removal of a spinal disk.” *Id*. at 1:14–17. The assemblies may be rods or plates that are attached to the bone with screws. *Id*. at 1:17–21. “However, one disadvantage has been the tendency of the implants to loosen or detach from the bone over time.” *Id*. at 1:24–25.

The ’008 patent describes an improved implant assembly designed to minimize detachment from bone. Generally, the implant assembly includes “a stabilizing element [e.g., a plate], a securing element [e.g., a screw] which attaches the stabilizing element to the patient’s bone, and a stopping member in the stabilizing element which defines at least in part a passageway and which inhibits or prevents the securing element from loosening or backing out of the bone.” *Id*. at 1:32–38.

Figure 1 of the ’008 patent is reproduced below.

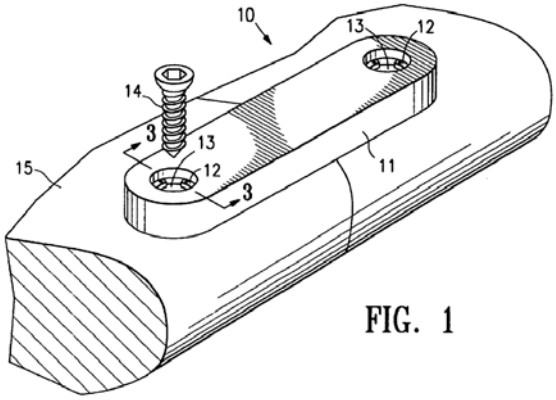

FIG. 1

Figure 1 illustrates orthopedic implant assembly 10 for attachment to a patient's bone 15. *Id*. at 4:16–20. The assembly includes stabilizing element 11 having bores 13, each of which may receive securing element 14 (here, a screw). *Id*.

Figures 2 and 3 are reproduced below.

FIG. 2

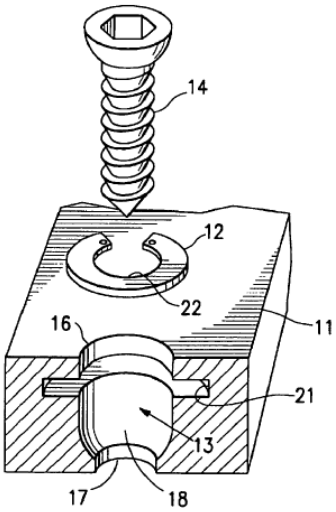

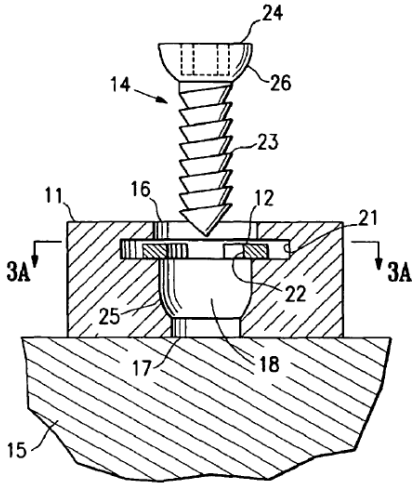

FIG. 3

Figures 2 and 3 illustrate exploded and sectional views, respectively, of a portion of the implant assembly of Figure 1. *Id*. at 4:34–37. Bore 13 includes first (i.e., anterior) opening 16, second (i.e., posterior) opening 17, and transverse passageway 18 extending between the openings. *Id*. at 4:26–

31. The bore also includes groove 21 that receives and retains annular collar 12. *Id*. at 4:31–34. The collar is c-shaped and defines passageway 22, as more easily seen in Figure 2. *See id*. at Fig. 2, refs. 12, 22.

The screw (securing element 14) has elongated body 23 and integral head 24. *Id*. at 4:45–48. The head has a flat anterior surface (not labelled) and curved posterior surface 26. *Id*. at 4:55–58. In a "preferred embodiment," the collar is positioned in the groove before the screw is advanced through the transverse passageway of the bore. *Id*. at 2:14–17. In such an embodiment, the screw is posteriorly advanced through the collar 12, such that the curved posterior surface of the head applies a radially expanding force against an inner surface of the collar to expand the inner diameter of the collar. *Id*. at 4:67–5:6, Fig. 4. As the head passes beyond the collar, it enters posterior section 25 of passageway 18, and the collar returns to the unexpanded configuration. *Id*. at 5:13–19, Fig. 5. The flat anterior surface of the head has a diameter larger than that of the unexpanded inner diameter of the collar. *Id*. at 5:19–22, Fig. 5. "Thus, the anterior surface of the head will butt up against the posterior surface of the collar without expanding the collar, to prevent the securing element from being anteriorly displaced" (i.e., backing out of the bone). *Id*. at 5:23–27.

Posterior section 25, which ultimately houses the head of the screw, is longer than the head, thus allowing the head to be displaceable longitudinally (i.e., anterior-posterior) within the posterior section of the transverse passageway. *Id*. at 5:43–48, Fig. 5. Also, the elongated body of the screw has a smaller diameter than that of the second (i.e., posterior) opening 17 of the bore, thus allowing the body to be displaceable side-to-

side (i.e., medial-lateral) within the second opening 17. *Id*. at 5:48–52, Fig. 5. As a result of these tolerances, the screw is angularly displaceable, as illustrated in FIG. 6. Thus, the ’008 patent discloses that the securing member (screw) may be inserted into the bone at angles other than strictly perpendicular. *Compare id*. at Fig. 5, *with* Fig. 6.

C. The Challenged Claims

Petitioner challenges claims 59–91. Pet. 1. Of these, claim 59 is independent. It is illustrative and reproduced below.

> 59. An orthopedic implant assembly, comprising:
>
> a) an elongated securing element having an enlarged integral portion with a length, an anterior surface, a posterior surface and a transverse dimension;
>
> b) an attachment element which has an anterior surface and a posterior surface and which has at least one bore extending through the attachment element from the anterior surface to the posterior surface and is configured to receive the securing element, the bore having an anterior bore portion, and a posterior bore portion, the posterior bore portion having at least one transverse dimension smaller than the transverse dimension of the enlarged integral portion of the securing element to facilitate retention of the enlarged integral portion of the securing member within the posterior bore portion; and
>
> c) a biased stopping member which has a posterior stopping surface, a first configuration which extends within the bore that is elastically deformed to a second configuration as the enlarged portion of the securing member passes into the posterior bore portion, the biased stopping member returning to the first configuration upon passage of the enlarged integral portion into the posterior bore portion, the posterior stopping surface of the biased stopping member configured to engage with the anterior surface of the enlarged integral portion of the securing member facilitating retention of the enlarged portion

of the securing member within the posterior bore portion of the attachment member.

D. Asserted Prior Art

The ’008 patent issued December 6, 2011, from an application filed July 15, 2003. The ’008 patent is a reissue of the ’291 patent, which had issued July 17, 2001, from an application filed July 8, 1999.

The Petition asserts the following references as prior art to the claims of the ’008 patent:

(1) Errico,[2] pursuant to 35 U.S.C. § 102(a) and (e)(2);[3]

(2) Koshino,[4] pursuant to 35 U.S.C. § 102(a) and (e)(2); and

(3) Campbell,[5] pursuant to 35 U.S.C. § 102(e)(2).

Pet. 5.

E. Asserted Grounds

The Petition identifies the following asserted ground of unpatentability:

---

[2] U.S. Patent No. 5,876,402, filed Mar. 29, 1996, issued March 2, 1999. Ex. 1003.

[3] The Leahy-Smith America Invents Act (“AIA”), Pub. L. No. 112-29, took effect on March 18, 2013. Because the application from which the ’008 patent issued was filed before that date, our citations to 35 U.S.C. §§ 102 and 103 are to their pre-AIA version.

[4] U.S. Patent No. 5,879,389, filed Apr. 1, 1996, issued March 9, 1999. Ex. 1004.

[5] U.S. Patent No. 6,258,089 B1, filed May 19, 1999, issued July 10, 2001. Ex. 1005.

References	Basis	Claims Challenged
Errico and Koshino or Campbell	§ 103(a)	59–91

Pet. 6.

II. ANALYSIS

A. Claim Construction

"A claim in an unexpired patent shall be given its broadest reasonable construction in light of the specification of the patent in which it appears." 37 C.F.R. § 42.100(b). Pursuant to that standard, the claim language should be read in light of the specification, as it would be interpreted by one of ordinary skill in the art. *In re Suitco Surface, Inc.*, 603 F.3d 1255, 1260 (Fed. Cir. 2010). Thus, we generally give claim terms their ordinary and customary meaning. *See In re Translogic Tech., Inc.*, 504 F.3d 1249, 1257 (Fed. Cir. 2007) ("The ordinary and customary meaning is the meaning that the term would have to a person of ordinary skill in the art in question.") (internal quotation marks omitted). Any special definition for a claim term must be set forth with reasonable clarity, deliberateness, and precision. *In re Paulsen*, 30 F.3d 1475, 1480 (Fed. Cir. 1994).

Neither party proposes an explicit construction for any term that requires construction for purposes of this Decision. One claim term, however, was expressly defined by applicants. In that regard, the '008 patent states: "The term *integral* should be understood to mean the securing element is a one-piece unit, with the head secured to the body so that there is no relative movement between the head and the body." Ex. 1001, 2:9–12 (emphasis added). Claim 59 recites "an elongated securing element having

an enlarged integral portion with a length, an anterior surface, a posterior surface and a transverse dimension." We interpret the term "integral" in claim 59 as defined in the specification.

B. Obviousness in View of Errico and Koshino or Campbell

Petitioner contends that claims 59–91 would have been obvious over Errico and Koshino or Campbell. Pet. 6. In assessing obviousness, "the scope and content of the prior art are to be determined; differences between the prior art and the claims at issue are to be ascertained; and the level of ordinary skill in the pertinent art resolved." *Graham v. John Deere Co.*, 383 U.S. 1, 17 (1966). Additionally, secondary considerations such as "commercial success, long felt but unsolved needs, failure of others, etc., might be utilized to give light to the circumstances surrounding the origin of the subject matter sought to be patented. As indicia of obviousness or nonobviousness, these inquiries may have relevancy." *Graham*, 383 U.S. at 17–18.

1. Errico (Ex. 1003)

Errico discloses an implant assembly "for use in stabilizing and immobilizing vertebral bodies" and which allows for "polyaxial" (multiple angled) placement and locking of screws. Ex. 1003, 4:12–14.

Figure 6 of Errico is reproduced below.

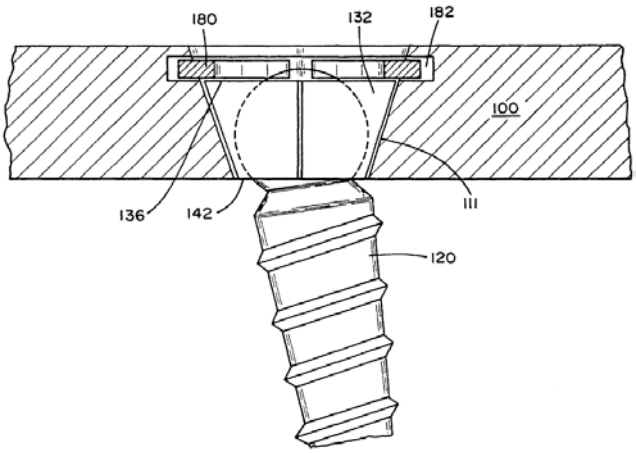

FIG.6

Figure 6 illustrates the implant assembly as fully assembled (except that it omits the bone to which the assembly would be attached). *Id*. at 5:24–25. The assembly includes plate 100 having an upper (anterior) surface and lower (posterior) surface. *Id*. at 5:24–25. With reference to Figure 3a, the plate includes multiple holes 110, 112, extending between the upper and lower surfaces. *Id*. at Fig. 3a. One such hole is shown in Figure 6 above; it is shaped roughly akin to that of an upside-down lampshade. The interior of the hole includes a groove or annular recess 182 within which is positioned c-shaped snap ring 180. Errico's snap ring 180 can function precisely in the same manner as that of the collar 12 in the '008 patent. *Id*. at 6:6–12. However, Errico's screw 120 lacks an integral head that deflects the snap ring outwardly when the screw is advanced posteriorly into the hole, as conceded by Petitioner and as applicants argued during prosecution. Pet. 14; Ex. 1002, 122–23, 555. Instead, the snap ring 180 is deflected by a different component of the Errico assembly—coupling element 132—which is advanced posteriorly with the screw during implantation. *Id*. at 7:41–55.

Errico's screw consists of head portion 122, neck 124, and shaft 126.

Ex. 1003, 6:16–17; *see* also Fig. 4 (illustrating the screw in isolation). The head is semi-spherical in shape, which Errico states requires a section of a sphere that is greater in extent than a hemisphere and which exhibits an external contour that is equidistant from a center point of the head. *Id*. at 6:26–31.

The head is mounted within the coupling element, which has "interior semi-spherical volume 140 which is ideally suited for holding the head portion 122 of the screw 120, and permitting the screw to rotate [(i.e., angulate) prior to the screw being fully advanced into bone] through a range of angles." *Id*. at 7:8–11, Fig. 5, ref. 140. The coupling element has an outer surface 134 corresponding to that of holes in the plate (i.e., roughly that of an upside-down lampshade). *Id*. at 6:58–67. However, the outer surface is not circumferentially continuous. *Id*. at 7:25–30. It includes axial slot 149, which allows the coupling element to be expanded to facilitate insertion of the head portion of the screw into the semi-spherical interior volume. *Id*. at 7:30–34, Fig. 5. The axial slot also allows the coupling element to be contracted when inserted into a hole of the plate. *Id*. This contraction "crush[es] against the head 122 upon the application of an inwardly directed radial force," thereby locking the angle with which the screw has been advanced. *Id*.; *id*. at 5:5–7.

2. Koshino (Ex. 1004)

Koshino discloses an implant for hard tissue (e.g., bone) designed to be attached to such tissue in a way that avoids subsequent loosening of the implant. Ex. 1004 at 1:5–13, 1:22, 3:23–25. The implant is attached to hard tissue with one or more "fixation screws." *Id*. at 4:52–55.

Figure 6 of Koshino is reproduced below.

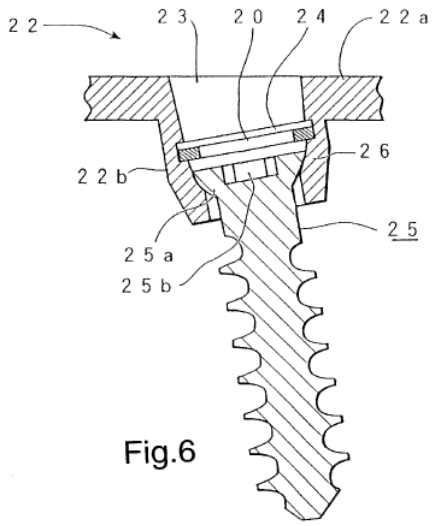

Figure 6 illustrates fixation screw 25 inserted through hole 23 of plate 22a of implant 22. *Id*. at 12:37–41, Fig. 6. The hole extends through projection 22b of the plate and is angled with respect to the plate. *Id*. Thus, the screw likewise is angled with respect to the plate. *Id*. at Fig. 6. The screw has head 25a that has a flat anterior surface and curved posterior surface, from which extends the threaded body of the screw.

3. Campbell (Ex. 1005)

Campbell discloses a cervical plate and fixation system, designed to be attached to the spine with fixation screws in a manner that inhibits loosening of the device after implantation. Ex. 1005, 1:12–15; 2:10–26. Figure 20 of Campbell is reproduced below.

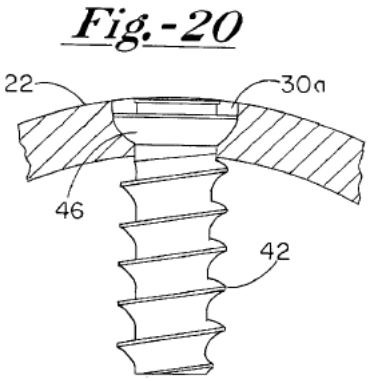

Figure 20 illustrates a sectional view of a portion of cervical plate 22 with "fastener" (screw) inserted. *Id*. at 4:22–26. The screw has elongated shank 42 with threads and "enlarged head 46 with a spherical profile 48 sized to allow the head to nest within spherical section 34 of the aperture." *Id*. at 5:45–51 (spherical section 34 not labelled in Fig. 20).

4. Petitioner's Application of the Art to the Challenged Claims

Petitioner concedes that Errico alone does not disclose the subject matter of the challenged claims, stating:

> The *only* difference between the challenged claims of the '008 patent and Errico is that the claimed invention of the '008 patent uses the head of the screw itself to expand the stopping member and provide a surface to prevent the screw from backing out, whereas Errico includes an extra part – a coupling element that surrounds the screw head – to perform these same functions.

Pet. 14.

Citing declaration testimony of Bret A. Ferree, M.D., the Petition argues that using a screw head from either Koshino or Campbell instead of Errico's coupling element "is nothing more than an obvious choice in design, and one that would have been readily contemplated and implemented

by a POSA at the time of the invention, for both mechanical and clinical reasons, with a reasonable expectation of success." *Id*. (citing Ex. 1006 ¶¶ 38–39). The cited testimony, however, is not persuasive. In paragraph 38, Dr. Ferree simply testifies to the ultimate conclusion of law that the claims are obvious. Ex. 1006 ¶ 38. And paragraph 39 is virtually identical to the just-quoted conclusory argument set forth in the Petition. *Id*. at ¶ 39.

The Petition and declaration do offer additional arguments and testimony to support the proposed modification but they too are insufficient. First, the Petition states, with support from Dr. Ferree, that "it was known in the orthopedic industry at the time of the filing of the '008 patent that it was desirable for orthopedic implants to be limited to the minimum number of components necessary" due to "cost of manufacturing, inventory, ease of use, crevice corrosion, and simplicity of surgery." Pet. 14 (citing Ex. 1006 ¶ 40). Limiting the number of components may be desirable, if the reduction can be achieved without compromising design goals. Yet, Errico expressly teaches a more complex structure because of the benefits it provides. Those benefits include that the screw can be angulated in countless directions to provide a surgeon flexibility during implantation (Ex. 1003, 7:22–24), that the screw is locked into whatever angle ultimately is chosen by the "crush locking" of the interior semi-spherical volume of the coupling element against the semi-spherical head (*id*. at 5:5–7), that the coupling element fully mates with the hole in the plate regardless of the angle of the screw (*id*. at 6:62–67), and that the coupling element is secured just beneath (posterior to) the snap ring (*id*. at 7:51–55, Fig. 6).

The Petition next states, with support from Dr. Ferree, that a person of

ordinary skill in the art "would understand that it is critical for the bone plate to have as thin a profile as possible" but that "[t]he coupling element in Errico . . . requires more space in the bore, and thus necessarily increases the profile (thickness) of the plate." Pet. 15 (citing Ex. 1006 ¶¶ 42–43). However, neither the Petition nor Dr. Ferree cites evidence that using a coupling element requires more anterior-posterior space in the bore than using a screw head alone. *See* Pet. 15; Ex. 1006 ¶¶ 42–43. In fact, the record evidence tends to show the opposite. In Koshino, as well as in the '008 patent, a substantial gap exists above the screw head. *See* Ex. 1004, Fig. 6; Ex. 1001, Figs. 5–6.[6] As discussed above, the '008 patent describes this gap as desirable because it, along with transverse tolerance, accommodates angulation of the screw. Ex. 1001, 5:43–52.

Petitioner has not shown an apparent reason to combine the relied upon teachings of Errico and Koshino or Campbell in the manner set forth in the challenged claims. *See KSR Int'l Co. v. Teleflex Inc.*, 550 U.S. 398, 418 (2007) (requiring, for obviousness, "an apparent reason to combine the known elements in the fashion claimed by the patent at issue").

Additionally, Errico teaches away from the proposed combination because such a combination would render Errico inoperable for its intended purpose. *See In re ICON Health & Fitness, Inc.*, 496 F.3d 1374, 1381 (Fed. Cir. 2007) ("Additionally, a reference may teach away from a use when that use would render the result inoperable."). Errico seeks to provide an

---

[6] Campbell also shows a gap above the screw head, although it appears to be relatively smaller than the gap above the screw head in Koshino or the '008 patent. *See* Ex. 1005, Fig. 22.

implantable plate "having a polyaxial coupling of the screw to the plate, whereby a single plate is compatible with a wide range of screw-in angles" and "which has a simple and effective locking mechanism for *locking the bone screw to the plate*." Ex. 1003, 3:59–67 (emphasis added).

Modifying Errico as Petitioner proposes would destroy at least one of these features. In Errico, the coupling element facilitates angulation of the screw relative to the plate prior to full implantation and subsequent locking of the screw to the plate in a given angulation upon full implantation. The proposed combination would remove the coupling element without substituting in anything that would preserve both features. Although the Petition explains how the proposed modified screw could angulate with respect to the plate (thereby allowing polyaxial coupling to the plate), the Petition does not explain how the proposed screw (or its head) could be locked to the plate at any particular angle. *See* Pet. 14–18.

Because Petitioner has not presented sufficient reasoning for why a person of ordinary skill in the art would have made the proposed combination and because Errico teaches away from such a combination, there is not a reasonable likelihood that Petitioner would prevail with respect to any of the claims challenged as obvious over Errico and Koshino or Campbell.

III. CONCLUSION

There is not a reasonable likelihood that Petitioner would prevail with respect to any challenged claim. *See* 35 U.S.C. § 314(a); 37 C.F.R. § 42.108.

IV. ORDER

Accordingly, it is

ORDERED that the Petition is denied.

For Petitioner:

Calvin Griffith
Kenneth Luchesi
cpgriffith@jonesday.com
kluchesi@jonesday.com

For Patent Owner:

Jay Guiliano
Ryan Murphy
jguiliano@polsinelli.com
rmurphy@polsinelli.com