Trials@uspto.gov
571-272-7822

Paper 30
Entered: December 14, 2017

UNITED STATES PATENT AND TRADEMARK OFFICE

BEFORE THE PATENT TRIAL AND APPEAL BOARD

APPLE, INC., HTC CORPORATION, HTC AMERICA, INC., MICROSOFT CORPORATION, MICROSOFT MOBILE OY, MICROSOFT MOBILE, INC., SAMSUNG ELECTRONICS CO., LTD., AND SAMSUNG ELECTRONICS AMERICA, INC., ZTE (USA) INC.,
Petitioners,

v.

EVOLVED WIRELESS LLC,
Patent Owner.

Case IPR2016-01208
Case IPR2016-01277[1]
Patent 7,746,916 B2

Before CHRISTOPHER L. CRUMBLEY, PATRICK M. BOUCHER, and TERRENCE W. McMILLIN, *Administrative Patent Judges*.

McMILLIN, *Administrative Patent Judge*.

FINAL WRITTEN DECISION
35 U.S.C. § 318(a) and 37 C.F.R. § 42.73

[1] These cases have been consolidated. Unless otherwise indicated, citations are to the record of IPR2016-01208.

In response to a Petition (Paper 2, "Pet.") filed in IPR2016-01208 by Apple, Inc. Microsoft Corporation, Microsoft Mobile OY, and Microsoft Mobile, Inc. (f/k/a Nokia, Inc.) (collectively, "Apple Petitioners"), we instituted an *inter partes* review of claims 1–10 of U.S. Patent No. 7,746,916 B2 ("the '916 patent"). Paper 7 ("Dec."), 23–24. ZTE (USA) Inc., Samsung Electronics Co., Ltd., Samsung Electronics America, Inc., HTC Corporation, and HTC America, Inc. (collectively, "ZTE Petitioners"), filed a substantially identical Petition in IPR2016-01277 and trial was instituted in IPR2016-01277 on the same grounds. Paper 8, 2–3. Thereafter, the proceedings were consolidated and we required the Apple Petitioners and ZTE Petitioners (collectively, "Petitioners") to file consolidated papers. *Id*. During the trial, Evolved Wireless LLC ("Patent Owner") timely filed a Response (Paper 14, "PO Resp."), to which Petitioners timely filed a Reply (Paper 17, "Reply"). An oral hearing was held on September 15, 2017, and a copy of the transcript was entered into the record. Paper 29 ("Tr.").

We have jurisdiction under 35 U.S.C. § 6. This Decision is a Final Written Decision under 35 U.S.C. § 318(a) as to the patentability of the claims on which we instituted trial. Based on the record before us, Petitioners have shown, by a preponderance of the evidence, that claims 1–10 are unpatentable.

I. BACKGROUND

A. Real Parties in Interest and Related Proceedings

The Apple Petitioners identify Apple, Inc., Microsoft Corporation, Microsoft Mobile OY, Microsoft Mobile, Inc. (f/k/a Nokia Inc.), Microsoft

Luxembourg International Mobile SARL, and Microsoft Luxembourg USA Mobile SARL as the real parties in interest. Pet. 1. The ZTE Petitioners identify ZTE Corporation, ZTE (USA) Inc., Samsung Electronics Co., Ltd., Samsung Electronics America, Inc., HTC Corporation, and HTC America, Inc. as the real parties in interest in IPR2016-01277 (Paper 2, 1). Patent Owner identifies only itself as a real party in interest and the owner of the '916 patent. Paper 5, 2.

The '916 patent has been asserted in several actions, captioned *Evolved Wireless, LLC v. Apple, Inc.*, C.A. 15-cv-542-SLR (D. Del.); *Evolved Wireless, LLC v. HTC Corp*., C.A. 15-cv-543-SLR (D. Del.); *Evolved Wireless, LLC v. Lenovo Group Ltd*., C.A. 15-cv-544-SLR (D. Del.); *Evolved Wireless, LLC v. Samsung Electronics Co. Ltd.*, C.A. 15-cv-545-SLR (D. Del.); *Evolved Wireless, LLC v. ZTE Corp.*, C.A. 15-cv-546-SLR (D. Del.); and *Evolved Wireless, LLC v. Microsoft Corp.*, C.A. 15-cv-547-SLR (D. Del.). Pet. 1; Paper 5, 2–3.

The '916 patent is also the subject of IPR2016-01209 and IPR2016-01280, which are consolidated and in which a final written decision on claims 1–10 is being issued on the same date as this decision.

B. The '916 Patent

The '916 patent is titled "Method and Apparatus for Generating and Transmitting Code Sequence in a Wireless Communication System." Ex. 1001, (54). The Specification states, "the code sequence or a code sequence set can be applied to 3rd Generation Partnership Project (3GPP) system or 3GPP2 system as well as a Wibro system or a Wimax system." *Id*. at 17:22–25. Figure 13, which is reproduced below, is a "diagram illustrating

application of circular shift to the generated code sequence after a padding portion is attached." *Id*. at 3:47–49.

FIG. 13

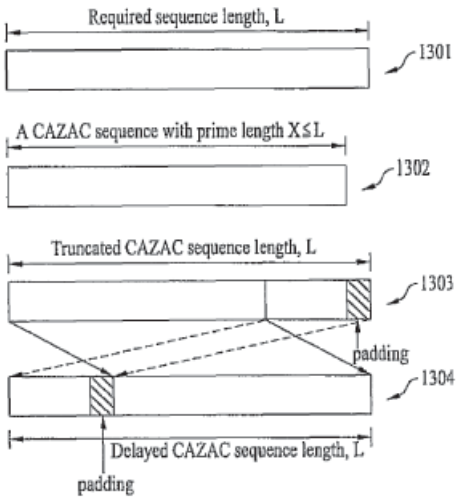

Figure 13 of the '916 patent depicts code sequence 1301 with a "[r]equired sequence length, L"; "CAZAC sequence [1302] with prime length X ≤ L"; "[t]runcated CAZAC sequence [1303] length, L" with a padding portion added; and "[d]elayed CAZAC sequence [1304] length, L" in which the end portion from code sequence 1303 has been circularly shifted to the start of code sequence 1304. *Id*. at 12:37–49. Thus, the '916 patent describes providing a code sequence for a wireless communication system which is extended by cyclic extension and rearranging the sequence by performing a circular shift.

Claims 1 and 6 of the '916 patent, reproduced below, are independent claims respectively directed at a method of transmitting the above-described sequence and at apparatus for transmitting the above-described sequence.

1. A method for transmitting a code sequence from a transmitting party to a receiving party in a wireless communication system, the method comprising:

acquiring a code sequence having a second length by a cyclic extension of a code sequence having a first length;

performing a circular shift to the code sequence having the second length; and

transmitting the circular shifted code sequence having the second length to the receiving party,

wherein the first length is a largest prime number smaller than the second length, and

wherein the cyclic extension of the code sequence having the first length is performed such that a part of the code sequence having the first length, having a length corresponding to a difference between the first length and the second length, is added to either a start or an end of the code sequence having the first length, and

wherein the circular shift is performed to the code sequence having the second length such that either a rear portion of the code sequence having the second length moves to a start of the code sequence having the second length, or a front portion of the code sequence having the second length moves to an end of the code sequence having the second length.

6. An apparatus for transmitting a code sequence in a wireless communication system, the apparatus comprising:

a code sequence generator for generating a code sequence having a second length by cyclic extension of a code sequence having a first length, and performing a circular shift to the code sequence having the second length; and

a transmitting unit for transmitting the circular shifted code sequence having the second length,

wherein the first length is a largest prime number smaller than the second length,

> wherein the cyclic extension of the code sequence having the first length is performed such that a part of the code sequence having the first length, having a length corresponding to a difference between the first length and the second length, is added to either a start or an end of the code sequence having the first length, and
>
> wherein the circular shift is performed to the code sequence having the second length such that either a rear portion of the code sequence having the second length moves to a start of the code sequence having the second length, or a front portion of the code sequence having the second length moves to an end of the code sequence having the second length.

Ex. 1001, 17:35–57, 18:7–28.

Dependent claims 2 and 7 recite, "the part of the code sequence having the first length comprises at least a cyclic prefix or a cyclic postfix." *Id*. at 17:58–60, 18:29–31.

Dependent claims 3 and 8 recite, "the cyclic extension is performed such that a cyclic postfix of the code sequence having the first length, having the length corresponding to the difference between the first length and the second length, is added to the end of the code sequence having the first length." *Id*. at 17:61–66, 18:32–37.

Dependent claims 4 and 9 recite, "the code sequence having the first length is a Zadoff-Chu (ZC) sequence." *Id*. at 18:1–3, 18:38–40.

Dependent claims 5 and 10 recite, "the code sequence having the second length is transmitted as a reference signal sequence." *Id*. at 18:4–6, 18:41–43.

C. Instituted Grounds of Unpatentability

We instituted trial challenges of claims 1–10 of the '916 patent on the following grounds of unpatentability. Dec. 23–24.

Reference(s)	Basis[2]	Challenged Claims
Zhuang327[3]	§ 102(e)	1–3, 5–8, and 10
Zhuang327	§ 103(a)	6–8 and 10[4]
Zhuang327 and Popović[5]	§ 103(a)	4 and 9
Zhuang327 and Hou[6]	§ 103(a)	1–3, 5–8, and 10
Zhuang327 and Hou and Popović	§ 103(a)	4 and 9

D. Cited References

Petitioners assert that Zhuang327 and Hou are prior art to the ’916 patent under 35 U.S.C. § 102(e) and Popović is prior art under 35 U.S.C.

[2] The relevant sections of the Leahy-Smith America Invents Act (“AIA”), Pub. L. No. 112–29, 125 Stat. 284 (September 16, 2011), took effect on March 16, 2013. Because the application from which the ’916 patent issued was filed before that date, our citations to Title 35 are to its pre-AIA version.

[3] Zhuang327 (US 7,599,327 B2, filed Mar. 2, 2005, issued Oct. 6, 2009) (Ex. 1007).

[4] Petitioners include claim 5 in this group in the table on page 3 of the Petition. However, in its detailed presentation relating to this ground, Petitioners make no reference to claim 5. Pet. 36–42.

[5] Branislav M. Popović, *Generalized Chirp-Like Polyphase Sequences with Optimum Correlation Properties*, 38 IEEE Transactions on Information Theory, 1406–1409 (1992) (Ex. 1009).

[6] Hou et al. (US 8,116,195 B2, filed July 27, 2005, issued Feb. 14, 2012) (Ex. 1011).

§ 102(b). Pet. 3–4. The earliest priority date claimed for the ’916 patent is November 28, 2005. Ex. 1001, (30), 1:6–10. Zhuang327 was filed on March 2, 2005, and Hou was filed on July 27, 2005. Popović was published in 1992. Patent Owner does not challenge the prior art status of these references. *See generally* PO Resp. Based on this record, Petitioners have established the cited references are prior art under 35 U.S.C. §§ 102 and 103.

1. Zhuang327 (Ex. 1007)

Zhuang327 is titled, “Method and Apparatus for Accessing a Wireless Communication System.” Ex. 1007, [54]. Zhuang327 relates to “a method and apparatus for randomly accessing a wireless communication system by a subscriber station in order to obtain or maintain such parameters as uplink timing, power control, channel estimation, and frequency alignment of the subscriber station.” Ex. 1007, 1:7–11. Zhuang327 states, “it is critical to design a mechanism for allowing a remote subscriber station (SS) to access the network by sending an access signal to a Base Station (BS).” *Id*. at 1:15–18.

Zhuang327 provides that the access signals used by subscriber stations to access the network are “generated based on a ranging sequence (interchangeable with ‘access sequence’ and ‘ranging code’ and ‘access code’).” *Id*. at 5:14–16. An example of ranging sequences given by Zhuang327 are, “Generalized Chirp Like (GCL) sequences.” *Id*. at 7:57–67. Figure 1 of Zhuang327 is reproduced below.

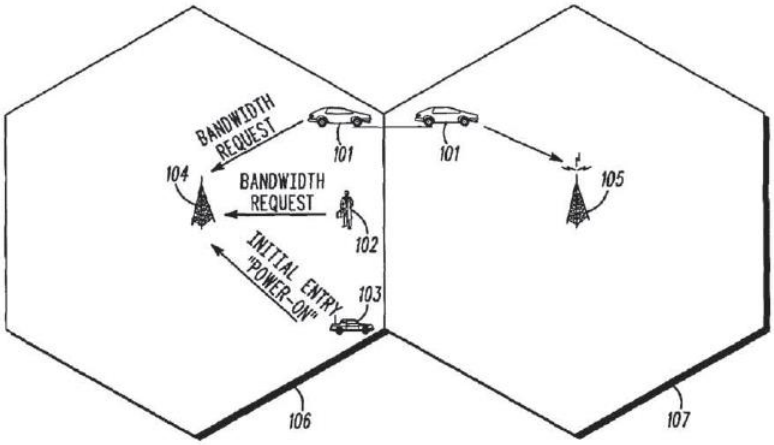

FIG. 1

100

Figure 1 of Zhuang327 depicts a communication system 100 with base stations 104 and 105 and subscriber stations 101–103. *Id*. at 2:46–67. Figure 8 of Zhuang327 is reproduced below.

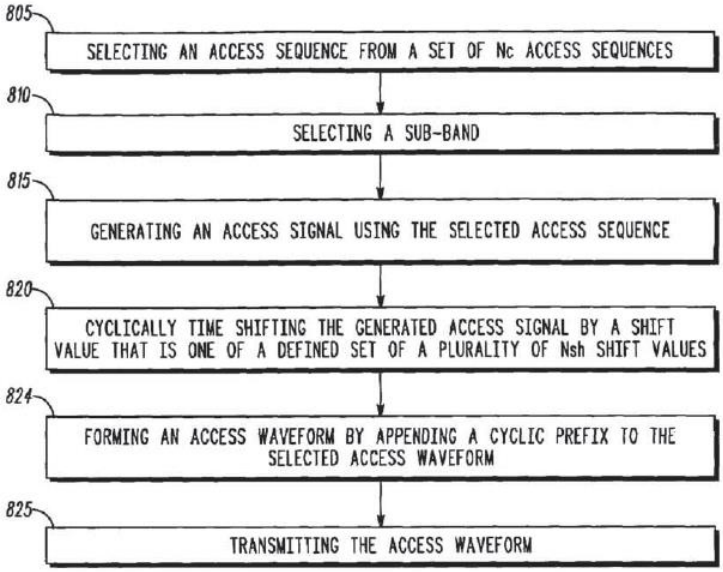

FIG. 8

Figure 8 of Zhuang327 depicts the "steps of methods used in a subscriber station such as any of the subscriber stations 101, 102, 103 (FIG. 1)." *Id*. at 10:25–27.

2. Popović (Ex. 1009)

Popović is titled, "Generalized Chirp-Like [GCL] Polyphase Sequences with Optimum Correlation Properties." Ex. 1009, 1406. Popović is an article from IEEE Transactions on Information Theory dated July, 1992. *Id*. Popović relates to "[a] new general class of polyphase sequences with ideal periodic autocorrelation function." Ex. 1009, 1406 (Abstract). Popović states, "[t]he new class of sequences is based on the application of Zadoff-Chu polyphase sequences." *Id*. Popović also states, "it was shown that all the cyclic time shifted versions of the Zadoff-Chu sequences have the same absolute value of the aperiodic autocorrelation function." *Id*. at 1409.

Thus, Popović recommends the use of Zadoff-Chu sequences and specifically discloses cyclic or circular shifted Zadoff-Chu sequences.

3. Hou (Ex. 1011)

Hou is titled, "Transmission and Reception of Reference Preamble Signals in OFDMA or OFDM Communication Systems." Ex. 1011, [54]. Hou relates to "[t]echniques for generating preamble sequences for OFDM and OFDMA communication systems based on CAZAC sequences with desired properties of constant amplitudes (CA) and zero autocorrelation (ZAC)." *Id*. at [57] (Abstract). Hou states, "[w]ell-known examples of CAZAC sequences include Chu and Frank-Zadoff sequences." *Id*. at 3:39–40. Hou explains that if a particular sequence "is a CAZAC sequence in the frequency domain, then its corresponding time-domain sequence is also a CAZAC sequence" and "the desired properties of the constant-amplitude and zero-auto-correlation of CAZAC sequence are preserved in both time

and frequency domain." *Id*. at 5:12–14, 65–67. Figures 2A and 2B of Hou are reproduced below.

FIG. 2A

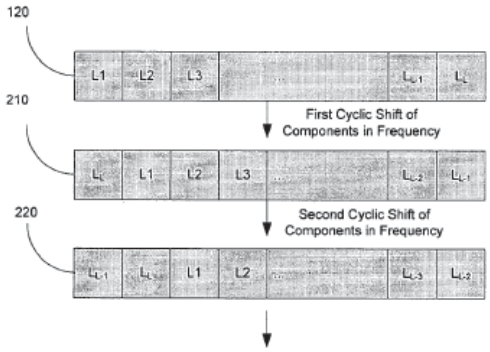

FIG. 2B

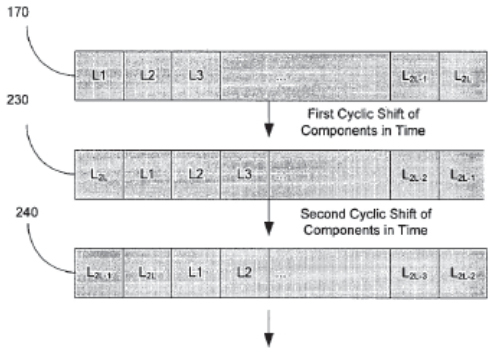

Figure 2A of Hou depicts "an example of using the cyclic shift of initial CAZAC sequence in the frequency domain to generate two new initial CAZAC sequences in the frequency domain," and Figure 2B of Hou depicts "an example of using the cyclic shift of the preamble sequence in the time domain to generate two new preamble sequences in the time domain." *Id*. at 3:11–17.

II. ANALYSIS

A. Claim Construction

A claim of an unexpired patent subject to *inter partes* review receives the "broadest reasonable construction in light of the specification of the patent in which it appears." 37 C.F.R. § 42.100(b); *see also Cuozzo Speed Techs., LLC v. Lee*, 136 S. Ct. 2131, 2144–46 (2016). We shall construe only terms that are in controversy and then only to the extent necessary to resolve the controversy. *Vivid Technologies, Inc. v. American Science & Engineering, Inc.*, 200 F.3d 795, 803 (Fed. Cir. 1999).

In the "Claim Construction" section of the Petition, Petitioners discuss: (1) "acquiring/generating a code sequence having a second length by a cyclic extension of a code sequence having a first length" (claims 1 and 6); (2) "cyclic prefix" (claims 2 and 7); (3) "cyclic postfix" (claims 2, 3, and 7); (4) "reference signal sequence" (claims 5 and 10); (5) "a code sequence generator" (claim 6); and (6) "a transmitting unit" (claim 6). Pet. 4–11.

As discussed more fully below, Patent Owner "is no longer contesting the validity of claims 1–5." PO Resp. 2. In addition, apart from its arguments directed at underlying independent claim 6, Patent Owner does not present any arguments or contest Petitioners' assertions relating to the limitations recited in dependent claims 7–10. *See generally* PO Resp. Because those limitations parallel those recited in uncontested dependent claims 2–5, we find it unnecessary to construe expressly any of the individual terms recited in claims 1–5 and 7–10.

And, as Patent Owner presents no argument or evidence relating to any element of the claims other than the first element of claim 6, we do not discuss construction of any terms outside the first element of claim 6.

1. "code sequence generator"

Although the parties agree that the term "code sequence generator" as recited in claim 6 should be given its plain and ordinary meaning and no explicit construction is necessary, they argue the meaning of this term. Pet. 8–11; PO Resp. 14–16; Reply 3–7.

Petitioners argue the term "code sequence generator" in claim 6 is not a means-plus-function limitation under 35 U.S.C. § 112 ¶ 6 and "should be given its plain meaning as understood under the BRI standard." Pet. at 8–9.[7] The word "means" is not used in claim 6. As a result, there is a presumption that the limitation is not a means-plus-function limitations that should be construed in accordance with Section 112, paragraph 6. *Williamson v. Citrix Online, LLC*, 792 F.3d 1339, 1349 (Fed. Cir. 2015) (en banc) ("When a claim term lacks the word 'means,' the presumption can be overcome and §112, para. 6 will apply if the challenger demonstrates that the claim term fails to 'recite[] sufficiently definite structure' or else recites 'function without reciting sufficient structure for performing that function.'" (citation omitted)). On the current record, there is insufficient persuasive argument or evidence to overcome the presumption. Petitioners are not challenging the

[7] Petitioners present a similar argument relating to "transmitting unit" in claim 6 in which it contends this term is not a means-plus-function limitation. Pet. 11. Patent Owner does not present any argument relating to construction of "transmitting unit" or contend the cited art fails to disclose a "transmitting unit." *See generally* PO Resp.

presumption (Pet. 9) and Patent Owner makes no mention of, and thus takes no position on, this issue (*see generally* PO Resp.). We do not construe "code sequence generator" as a means-plus-function limitation.[8]

The existing controversy relating to the term "code sequence generator" relates to whether this term should be construed as limited to a unitary device, as Patent Owner contends. *See* Pet. 9–10 ("the '916 patent does not limit the recited code sequence generator to a unitary device"); PO Resp. 15 ("a POSITA would not interpret the phrase 'code sequence generator' to broadly encompass hardware or software logic found across multiple devices"). Petitioners argue that Patent Owner's narrower construction finds no support in the Specification. Pet. 9–11. Without taking a position as to whether the phrase "sequence selection unit" corresponds to the claimed "code sequence generator," Patent Owner argues the term "unit" as used in Figure 16 of the '916 patent in the phrase "sequence selection unit" "refer[s] to software or logic within a single device." PO Resp. 15 ("Assuming the 'sequence selection unit' refers to the claimed code sequence generator, the term unit would again refer to software or hardware logic within a single device.") But we find Figure 17 of the '916 patent, reproduced below, more pertinent to this issue.

---

[8] In the related District Court litigations, Petitioners challenged the presumption and argued this term was a means-plus-function limitation. Pet. 8–9. Patent Owner argued this term was not a means-plus-function limitation. *Id*. The District Court ruled that Petitioners failed to overcome the presumption and that Section 112, paragraph 6, did not apply to this limitation. *Evolved Wireless, LLC, v. Apple, Inc.*, Civ. No. 15-542-SLR, slip op. at 3–5 (D. Del. Nov. 14, 2016).

FIG. 17

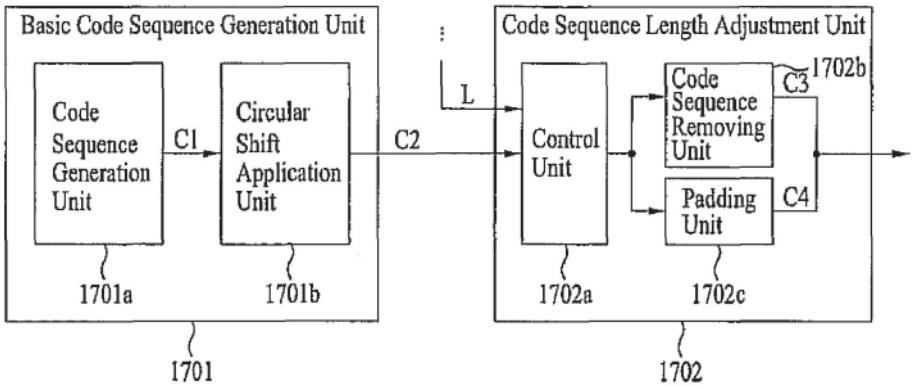

Figure 17 depicts "a structural diagram illustrating a basic code sequence generation unit and a code sequence length adjustment unit." Ex. 1001, 3:61–63. Figure 17 shows sub-units (the "Circular Shift Application Unit" 1701b of the "Basic Code Sequence Generation Unit" 1701 and the "Padding Unit" 1702c of the "Code Sequence Length Adjustment Unit" 1702) which refer to the functions ("circular shift" and "cyclic extension") recited as performed by the "code sequence generator" in claim 6. The detailed description of Figure 17 also refers to these sub-units as distinct units performing the functions of the "code sequence generator" in claim 6. Ex. 1001, 15:38–16:7. The Specification does not support construing the phrase "code sequence generator" as a unitary device.

In addition, Patent Owner cites dictionary definitions of "generator" which contain the singular terms "circuit" and "device." PO Resp. 14–15. But we agree with Petitioners that a circuit and a device can themselves contain multiple, distinct parts. *See* Reply 4. These dictionary definitions do not support Patent Owner's proposed construction.

As noted above, 37 C.F.R. § 42.100 (b) provides a claim, "shall be

given its broadest reasonable construction in light of the specification of the patent in which it appears." We conclude that, under the broadest reasonable interpretation of claim 6, the scope of the claim is not limited in the manner proposed by Patent Owner. We do not construe the phrase "code sequence generator" as limited to a unitary device.

2. "generating a code sequence having a second length by a cyclic extension of a code sequence having a first length"

The parties argue the construction of the following phrase in claim 6: "generating a code sequence having a second length by a cyclic extension of a code sequence having a first length." Petitioners argue:

> the broadest reasonable interpretation (BRI) of the phrase "acquiring/generating a code sequence having a second length by a cyclic extension of a code sequence having a first length" is broad enough to encompass "acquiring/generating a code sequence having a second length through execution of one or more operations that include performing a cyclic extension of a code sequence having a first length."

Pet. 5. Thus, Petitioners argue the word "by" in the context of claims 1 and 6 should be interpreted as expanded to: "through execution of one or more operations that include performing."

In making this argument, Petitioners fail to cite to the claims, the specification, or the file history, and do not argue the claims, specification, or file history support the proposed interpretation. Pet. 5–6. The only support cited is the "plain and ordinary meaning" based on a general purpose dictionary.[9] *Id*.

---

[9] American Heritage Dictionary of the English Language (4th ed. 2000) (Ex. 1005).

Patent Owner does not propose a construction of this phrase but, instead, argues Petitioners' proposed construction broadens the claim language beyond its reasonable meaning and should be rejected. PO Resp. 16–21. At oral argument, Patent Owner clarified its objection to Petitioners' proposed construction. Tr. 61:21–22 ("Petitioners' construction allows anything to be put in the middle. Anything."). Specifically, Patent Owner contends, "Petitioners' construction would unreasonably allow any number and variety of mathematical operations to occur." PO Resp. 17; *see also* Tr. 57:6–17. We agree with Patent Owner that Petitioners' proposed construction is unreasonably broad. Therefore, we do not adopt the construction of this limitation argued by Petitioners.[10]

B. Claims 1–5

Patent Owner indicates it "is no longer contesting the validity of claims 1–5." PO Resp. 2. During oral argument, Patent Owner stated that Petitioners "still bear the burden of proof so if the Board believes that what they set forth is sufficient to satisfy that burden, then the Board is free to

[10] Although we do not adopt Petitioners' proposed construction that would unreasonably construe the contested limitation to allow "one or more" undefined operations to occur, we also reject Patent Owner's argument that this limitation should be construed so as not to allow any additional, unrecited operations to occur. Tr. 54:11–17 ("the plain meaning of the language says we have a first operation performed and then on the output of that operation, we have a second operation performed . . . to try to put something in to undo the direct connection between the output of Stage 1, the output of the cyclic extension, to the input of the circular shift is just not proper." *See also* PO Resp. 22–24. We reject both Petitioners' overly broad ***any*** undefined operations construction and Patent Owner's overly narrow ***no*** unrecited operations implied construction as unreasonable extremes.

enter in that judgment." Tr. 4:17–22. Patent Owner made no arguments as to claims 1–5. *See generally* PO Resp.; Tr. 23–24.

Petitioners challenged, and we instituted trial on, claims 1–3 and 5 on the following grounds: (1) anticipation over Zhuang327 and (2) obviousness over Zhuang327 and Hou. Dec. 23–24. Petitioners challenged, and we instituted trial on, claim 4 on the following grounds: (1) obviousness over Zhuang327 and Popović and (2) obviousness over Zhuang327, Hou, and Popović. *Id*.

To prevail on its challenges, Petitioners must demonstrate by a preponderance of the evidence that the claims are unpatentable. 35 U.S.C. § 316(e); 37 C.F.R. § 42.1(d). "In an [*inter partes* review], the petitioner has the burden from the onset to show with particularity why the patent it challenges is unpatentable." *Harmonic Inc. v. Avid Tech., Inc.* 815 F.3d 1356, 1363 (Fed. Cir. 2016) (citing 35 U.S.C. § 312(a)(3) (requiring *inter partes* review petitions to identify "with particularity . . . the evidence that supports the grounds for the challenge to each claim")). This burden never shifts to Patent Owner. *See Dynamic Drinkware, LLC. v. Nat'l Graphics, Inc.*, 800 F.3d 1375, 1378 (Fed. Cir. 2015) (citing *Tech. Licensing Corp. v. Videotek, Inc.*, 545 F.3d 1316, 1326–27 (Fed. Cir. 2008)) (discussing the burden of proof in *inter partes* review). Furthermore, a petitioner does not satisfy its burden of proving unpatentability by employing "mere conclusory statements." *In re Magnum Oil Tools Int'l, Ltd.*, 829 F.3d 1364, 1380 (Fed. Cir. 2016).

To anticipate a claim under 35 U.S.C. § 102, a prior art reference must disclose every limitation of the claimed invention and must describe the

applicant's claimed invention sufficiently to have placed a person of ordinary skill in the field of the invention in possession of it. *In re Schreiber*, 128 F.3d 1473, 1477 (Fed. Cir. 1997); *In re Spada*, 911 F.2d 705, 708 (Fed. Cir. 1990).

A claim is unpatentable as obvious under 35 U.S.C. § 103 if the differences between the claimed subject matter and the prior art are "such that the subject matter as a whole would have been obvious at the time the invention was made to a person having ordinary skill in the art to which said subject matter pertains." *KSR Int'l Co. v. Teleflex Inc.*, 550 U.S. 398, 406 (2007). The question of obviousness is resolved on the basis of underlying factual determinations, including: (1) the scope and content of the prior art; (2) any differences between the claimed subject matter and the prior art; (3) the level of skill in the art; and (4) objective evidence of non-obviousness, i.e., secondary considerations.[11] *Graham v. John Deere Co.*, 383 U.S. 1, 17–18 (1966).

Additionally, the obviousness inquiry typically requires an analysis of "whether there was an apparent reason to combine the known elements in the fashion claimed by the patent at issue." *KSR*, 550 U.S. at 418 (citing *In re Kahn*, 441 F.3d 977, 988 (Fed. Cir. 2006) (requiring "articulated reasoning with some rational underpinning to support the legal conclusion of obviousness")); *see In re Warsaw Orthopedic, Inc.*, 832 F.3d 1327, 1333 (Fed. Cir. 2016) (citing *DyStar Textilfarben GmbH & Co. Deutschland KG v. C. H. Patrick Co.*, 464 F.3d 1356, 1360 (Fed. Cir. 2006)).

[11] The parties do not address secondary considerations, which, accordingly, do not form part of our analysis.

With regard to the level of ordinary skill in the art, Petitioners' declarant,[12] Jonathan Wells, Ph. D., testifies that:

> A person of ordinary skill in the art at or before the time of the invention of the '916 patent ("POSA") would have had a Master's of Science Degree in an academic area emphasizing Electrical Engineering, Physics, Computer Engineering, or an equivalent field (or a similar technical Master's Degree, or higher degree) with a concentration in wireless communication and networking systems. Alternatively, a POSA would have had a Bachelor's degree (or higher) in an academic area emphasizing Electrical Engineering, Physics, Computer Engineering, or an equivalent field as well as at least 2 years of academic or industry experience in wireless communications and networking systems. A POSA would also have had experience with the wireless Standard Setting Organizations such as ETSI, IEEE, and 3GPP, and would have been familiar with relevant standards and draft standards directed to wireless communications. Additional education in a relevant field, such as electrical engineering or physics, or industry experience may compensate for a deficit in one of the other aspects of the requirements stated above. I am familiar with the knowledge and capabilities of one of ordinary skill in these areas based on my experience working with industry, with undergraduate and post-graduate students, with colleagues from academia, and with engineers practicing in industry.

Ex. 1003 ¶ 34. Patent Owner does not make any argument or present any evidence with regard to the level of ordinary skill in the art or contest any part of Petitioners' showing. *See generally* PO Resp. We find Petitioners' proposal reasonable, and accordingly, based on this record, we adopt the level of skill in the art proposed by Petitioners.

[12] Patent Owner did not submit an expert declaration.

1. Independent Claim 1

Claim 1 is a method claim. The preamble of claim 1 recites, "[a] method for transmitting a code sequence from a transmitting party to a receiving party in a wireless communication system." As shown by Petitioners (Pet. 18–19 (citing Wells Decl. ¶¶ 112–113)), Zhuang327 discloses, "a method and apparatus for randomly accessing a wireless communication system by a subscriber station. Ex. 1007, 1:7–9. Zhuang327 states, "[i]n a wireless communication system, it is critical to design a mechanism for allowing a remote subscriber station (SS) to access the network by sending an access signal to a Base Station." *Id*. at 1:15–18. Zhuang327 also states, "[e]ach random access signal is generated based on a ranging sequence (interchangeable with 'access sequence' and 'ranging code' and 'access code') that is randomly chosen from a code group." *Id*. at 5:14–17. We find Zhuang327 discloses each element of the preamble of claim 1.

The first step of claim 1 is "acquiring a code sequence having a second length by a cyclic extension of a code sequence having a first length." As shown by Petitioners (Pet. 19–23 (citing Wells Decl. ¶¶ 114–122)), Zhuang327 discloses first generating a GCL (Generalized Chirp Like) sequence of the length "N_G." Ex. 1007, 7:57–8:10. Zhuang327 states, "when N_G is smaller than K, the corresponding set of sequences of length K is generated by copying ($K-N_G$) terms from the beginning of each GCL sequence and appending them to the end." *Id*. at 15:66–16:2 (claim 7). Patent Owner acknowledges, "Zhuang327 describes a method of generating access signals whereby a first code sequence is generated by cyclic

extension of a base sequence." PO Resp. 10. We find Zhuang327 discloses all the limitations of the first step of claim 1.

The second step of claim 1 is "performing a circular shift to the code sequence having the second length." As shown by Petitioners (Pet. 23–24 (citing Wells Decl. ¶ 123)), Zhuang327 discloses that "the generated access signal is cyclically time shifted." Ex. 1007, 10:35–36. Figure 6 of Zhuang327 is reproduced below.

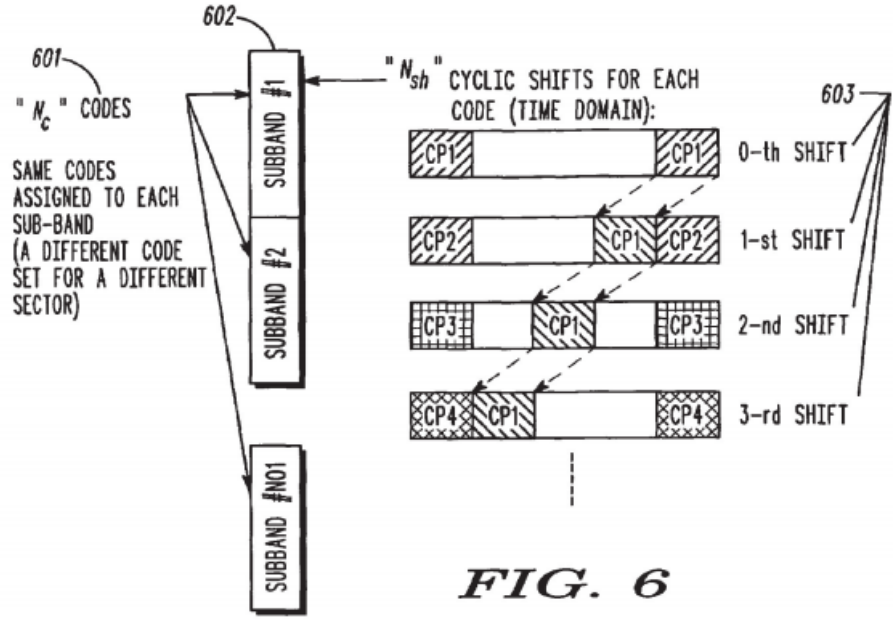

FIG. 6

Figure 6 depicts, "for each ranging code, N_{sh} cyclic time shifts 603 of the time-domain ranging signal (phase rotation in frequency domain) can be used to further increase the number of ranging opportunities." *Id*. at 6:30–33. We find Zhuang327 discloses all the limitations of the second step of claim 1.

Petitioners cite Hou as disclosing "that circular shift of a code sequence can be performed in the frequency or in the time domain" citing Figure 2 and the related description at column 3, lines 11–17. Pet. 51–57

(citing Wells Decl. ¶¶ 195–203). We find Hou discloses performing a circular shift to a code sequence in either the frequency domain or time domain.

With regard to the rationale for combining these teachings of Zhuang327 and Hou, Petitioners contend:

> A POSITA would have been motivated to modify the cyclically extended ranging sequence 120 of Zhuang327, see Ex. 1007, 8:65-9:1, by cyclically shifting that frequency-domain sequence 120, per Hou, in order to obtain additional sequences for synchronization, channel estimation and identification purposes, as suggested by Hou, Ex. 1011, Abstract. The POSITA would have understood from Hou that cyclically extended frequency-domain sequence of Zhuang327 could be the base sequence (e.g., the base sequence 120 of FIG. 2A of Hou) from which multiple additional CAZAC sequences (e.g., cyclically shifted sequences 210 and 220 of FIG. 2A of Hou) could be obtained via cyclic shifts.

Pet. 54. Based on this showing, we find Petitioners articulate reasoning with rational underpinning for combining the relevant teachings of Zhuang327 and Hou. *See KSR*, 550 U.S. at 418. We conclude a person of ordinary skill in the art would have been motivated to combine the teachings of Zhuang327 and Hou.

The third step of claim 1 is "transmitting the circular shifted code sequence having the second length to the receiving party." As shown by Petitioners (Pet. 24 (citing Wells Decl. ¶ 124)), Figure 8 of Zhuang327, reproduced below, discloses transmitting a cyclically (or circularly) shifted access signal.

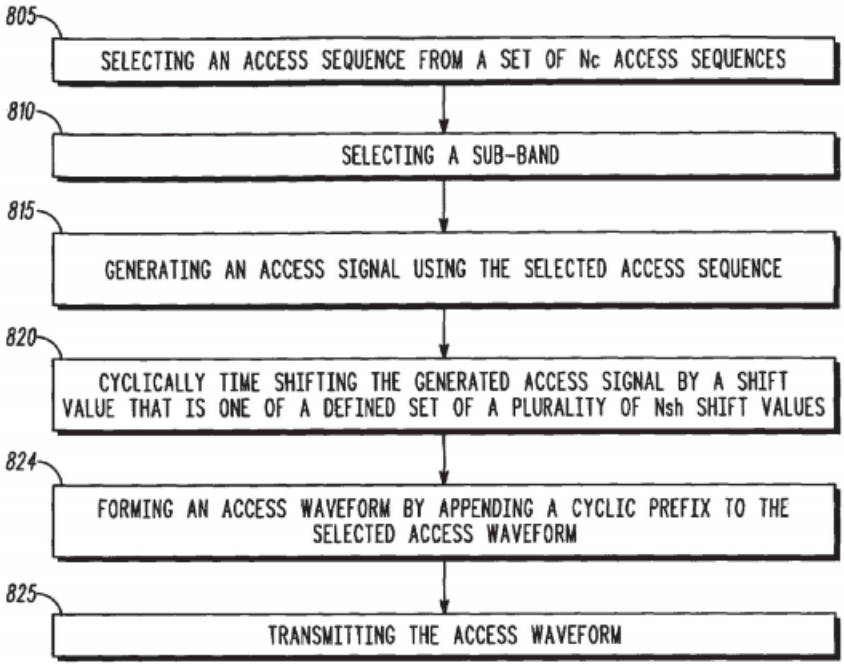

FIG. 8

Figure 8 depicts:

> At step 815 an access signal is generated using the selected access sequence. At step 820 the generated access signal is cyclically time shifted by a shift value that is one of a defined set of N_{sh} shift values. At step 82[4], an access waveform is formed by appending a cyclic prefix in front of the generated access signal. At step 825 the access waveform is transmitted using a sub-band of K sub-carriers.

Ex. 1007 at 10:34–40. We find Zhuang327 discloses all the limitations of the third step of claim 1.

Claim 1 recites, "wherein the first length is a largest prime number smaller than the second length." As shown by Petitioners (Pet. 24–25 (citing Wells Decl. ¶ 125)), Zhuang327 discloses, "the largest prime number that is smaller than the desired length is chosen and the GCL sequence is cyclically extended to the desired length." Ex. 1007, 8:66–9:1. We find that

Zhuang327 discloses the limitation recited in the first "wherein" clause of claim 1.

Claim 1 recites:

> wherein the cyclic extension of the code sequence having the first length is performed such that a part of the code sequence having the first length, having a length corresponding to a difference between the first length and the second length, is added to either a start or an end of the code sequence having the first length.

As shown above with regard to the first step of claim 1, Zhuang327 discloses all the limitations recited in the second "wherein" clause of claim 1. *See also* Pet. 25 (citing Ex. 1007, 15:66–16:2 (claim 7) and Wells Decl. ¶ 126).

Claim 1 recites:

> wherein the circular shift is performed to the code sequence having the second length such that either a rear portion of the code sequence having the second length moves to a start of the code sequence having the second length, or a front portion of the code sequence having the second length moves to an end of the code sequence having the second length.

As shown above with regard to the second step of claim 1, Zhuang327 discloses all the limitations recited in the third "wherein" clause of claim 1. *See also* Pet. 25–28 (citing Ex. 1007, Figure 6 and Wells Decl. ¶¶ 127–128).

Petitioners also cite Figure 2A of Hou and the teaching at column 7, lines 18–25, of performing a circular shift in the frequency domain. Pet. 59–60 (citing Wells Decl. 207–208). We find Hou teaches all the limitations recited in the third "wherein" clause of claim 1.

As noted above, Patent Owner presents no arguments or evidence in support of the patentability of claim 1. We conclude that Petitioners demonstrate, by a preponderance of the evidence, that claim 1 is

unpatentable under 35 U.S.C. § 102 as anticipated by Zhuang327 and under 35 U.S.C. § 103 as obvious over Zhuang327 and Hou.

2. Dependent Claims 2–5

Patent Owner fails to contest any part of Petitioners' showing with regard to dependent claims 2–5. *See generally* PO Resp.

Dependent claim 2 recites, "[t]he method according to claim 1, wherein the part of the code sequence having the first length comprises at least a cyclic prefix or a cyclic postfix." Petitioners cite Zhuang327 as disclosing this element. Pet. 28. Zhuang327 states, "when [sequence] N_G is smaller than K, the corresponding set of sequences of length K is generated by copying (K-N_G) terms from the beginning of each GCL sequence and appending them to the end." Ex. 1007, 15:66–16:2. Petitioners also cite paragraphs 134 and 135 of the Wells Declaration. Pet. 28. The Wells Declaration states:

> Zhuang327 discloses such a padding portion comprises at least a cyclic postfix as Zhuang327 makes clear that "(K-N_G) terms from the beginning of each GCL sequence" (denoted as 130 in Petitioner-Fig. 1) are appended to the end of the sequence of length N_G as a cyclic postfix: "wherein N_G is smaller than K, the corresponding set of sequences of length K is generated by copying (K-N_G) terms from the beginning of each GCL sequence and *appending them to the end*."

Ex. 1003 ¶ 135. We find that the cited art discloses all the limitations of claim 2.

Dependent claim 3 recites, "[t]he method according to claim 1, wherein the cyclic extension is performed such that a cyclic postfix of the code sequence having the first length, having the length corresponding to the difference between the first length and the second length, is added to the end

of the code sequence having the first length." Petitioners cite the same passage in Zhuang327 cited against claim 2. Pet. 29 (citing Ex. 1007, 15:66–16:2). Petitioners also cite the Wells Declaration. Pet. 29. The Wells Declaration states:

> Zhuang327 discloses that a cyclic postfix of the code sequence having the first length, having the length corresponding to the difference between the first length and the second length, (*i.e.*, "($K-N_G$) terms from the beginning of each GCL sequence"), is added to the end of the code sequence having the first length (*i.e.*, the GCL sequence of length N_G): "wherein when N_G is smaller than K, the corresponding set of sequences of length K is generated by copying ($K-N_G$) terms from the beginning of each GCL sequence and *appending them to the end*."

Ex. 1003 ¶ 136. We find that the cited art discloses all the limitations of claim 3.

Dependent claim 4 recites, "[t]he method according to claim 1, wherein the code sequence having the first length is a Zadoff-Chu (ZC) sequence." Petitioners cite Popović as disclosing the use of Zadoff-Chu sequences in the same context as the method of claim 1. Pet. 42–45 (citing Wells. Decl. ¶¶ 166–175). As noted earlier, Popović recommends the use of Zadoff-Chu sequences and specifically discloses cyclic or circular shifted Zadoff-Chu sequences. And, in the "Background of the Invention," the '916 patent states, "[w]ith respect to CAZAC (Constant Amplitude Zero Auto-Correlation) sequence types, GCL CAZAC and Zadoff-Chu CAZAC are often used." Ex. 1001, 1:40–42. We find that the cited art discloses all the limitations of claim 4.

With regard to the rationale for combining the teachings of Zhuang327 and Popović, the Petition asserts:

> Therefore, it would have been obvious to a POSITA that "ZC sequence" can be used in place of the GCL sequence as taught by Zhuang327 because, as Popovic explains, ZC sequence is indeed a special case of "the new, more general, class of polyphase sequences" (i.e., GCL sequences) that have "optimum periodic autocorrelation and crosscorrelation function properties," which is consistent with the motivations of using GCL sequences in Zhuang327. *See* Ex. 1009, 1406, col. 2 and Ex. 1007 at 8:13-41. *See* Wells Declaration, ¶¶ 166-171.
>
> Furthermore, although the GCL sequence is a "more general" sequence than the ZC sequence, its generation requires more computations than the ZC sequence because the GCL sequence is obtained by further multiplying the ZC sequence with another sequence $\{b_k\}$, which is a "sequence of m complex numbers having the absolute values equal to 1." Ex. 1009 at 1407, col. 1. A POSITA would have been motivated to choose the ZC sequences over the GCL sequences in practical systems because the ZC sequences provide the same optimal auto- and cross-correlation properties (i.e., the properties of interest in Zhuang327) as GCL sequences while requiring less computations in generation by not performing the multiplications with the sequence $\{b_k\}$ of complex numbers required to generate the GCL sequences. Such computational advantages can, for example, decrease the loads on the processing units that generate the sequences, thereby resulting in power savings, which are particularly important for mobile devices for uplink communications. *See* Wells Declaration, ¶¶ 172-173.

Pet. 44–45. Based on this showing, we find Petitioners articulate reasoning with rational underpinning for combining the relevant teachings of Zhuang327 and Popović. *See KSR*, 550 U.S. at 418. We conclude a person of ordinary skill in the art would have combined the teachings of Zhuang327 and Popović.

Dependent claim 5 recites, "[t]he method according to claim 1, wherein the code sequence having the second length is transmitted as a

reference signal sequence." As shown by Petitioners (Pet. 29–30 (citing Wells Decl. ¶¶ 137–138)), Figure 10 of Zhuang327, reproduced below, discloses the limitations of claim 5.

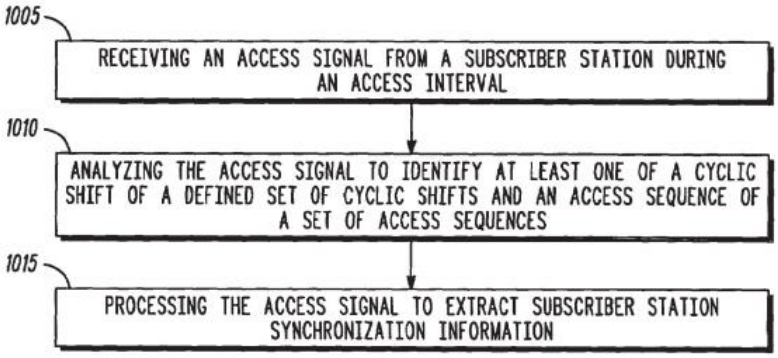

FIG. 10

Figure 10 depicts a method "used by a base station in a wireless communication system for facilitating an access of the communication system by a subscriber station." Ex. 1007, 2:27–29. The detailed description of Figure 10 states:

> Referring to FIG. 10, a flow chart shows a method used by a base station in a wireless communication system for facilitating an access of the communication system by a subscriber station, in accordance with some embodiments of the present invention. At step 1005, an access signal is received from a subscriber station during an access interval. At step 1010, the access signal is analyzed to identify at least one of a cyclic shift of a defined set of cyclic shifts and an access sequence of a set of access sequences. The method may include, at step 1015, processing the access signal to extract subscriber station synchronization information.

Id. at 13:64–14:7. According to the "Background of the Invention" in the '916 patent, a reference signal is "used for initial synchronization, cell

search, and channel estimation." Ex. 1001, 1:21–22. We find that the cited art discloses all the limitations of claim 5.

As noted above, Patent Owner presents no arguments or evidence in support of the patentability of claims 2–5. We conclude that Petitioners demonstrate, by a preponderance of the evidence, that claims 2, 3, and 5 are unpatentable under 35 U.S.C. § 102(a) over Zhuang327 and under 35 U.S.C. § 103(a) over Zhuang327 and a combination of Zhuang327 and Hou. We conclude that Petitioners demonstrate, by a preponderance of the evidence, that claim 4 is unpatentable under 35 U.S.C. § 103(a) over the combinations of Zhuang327 and Popović and of Zhuang327, Popović, and Hou.

C. Claims 6–10

Petitioners challenged, and we instituted trial on, claims 6–8 and 10 on the following grounds: (1) anticipation over Zhuang327; (2) obviousness over Zhuang327;[13] and (3) obviousness over Zhuang327 and Hou. Dec. 23–24. Petitioners challenged, and we instituted trial on, claim 9 on the following grounds: (1) obviousness over Zhuang327 and Popović; and (2) obviousness over Zhuang327, Hou, and Popović. *Id*.

1. Independent Claim 6

Independent claim 6 is the only claim for which Patent Owner presents independent argument. *See generally* PO Resp. Claim 6 is very

[13] As we find Zhuang327 anticipates claims 6–8, and 10, we also conclude Zhuang327 renders these same claims obvious. "[A] disclosure that anticipates under § 102 also renders the claim invalid under § 103, for 'anticipation is the epitome of obviousness.'" *Connell v. Sears, Roebuck & Co.*, 722 F.2d 1542, 1548 (Fed. Cir. 1983) (citing *In re Fracalossi*, 681 F.2d 792 (CCPA 1982)).

similar to claim 1. Claim 6 is a device[14] claim but otherwise recites almost[15] the exact same functional language as method claim 1. *See Accenture Glob. Servs., GmbH v. Guidewire Software, Inc.*, 728 F.3d 1336, 1344 (Fed. Cir. 2013) ("Because the system claim and method claim contain only 'minor differences in terminology [but] require performance of the same basic process,' they should rise or fall together." (citation omitted)). Patent Owner argues claim 6 is not unpatentable, but Petitioners' showing that claim 1 is unpatentable is not contested in whole or in part by Patent Owner. As stated by Petitioners, "[i]n essence, [Patent Owner] argues that claims 6–10 are valid because they recite an *apparatus*, despite the apparatus performing *known* methods." Reply 1.

Claim 6 is an apparatus claim. The preamble of claim 6 recites, "[a]n apparatus for transmitting a code sequence in a wireless communication system." As shown by Petitioners (Pet. 30 (citing Wells Decl. ¶¶ 112–113)), Zhuang327 discloses, "a method and apparatus for randomly accessing a wireless communication system by a subscriber station." Ex. 1007, 1:7–9. Zhuang327 states, "it is critical to design a mechanism for allowing a remote subscriber station (SS) to access the network by sending an access signal to a Base Station (BS)." *Id*. at 1:15–18. Zhuang327 provides that the access signals used by subscriber stations to access the network are "generated based on a ranging sequence (interchangeable with 'access sequence' and

[14] The only device limitations recited in claim 6 are "apparatus" in the preamble, "generator" in the first element, and "unit" in the second element.
[15] Claim 1 recites, "acquiring a code sequence." Claim 6 recites, "generating a code sequence." Otherwise, the functional language of claim 6 is exactly the same as that of claim 1.

'ranging code' and 'access code')." *Id*. at 5:14–16. The subscriber station transmits an access code sequence. *Id*. at 18:4–36 (claim 21). We find Zhuang327 discloses the preamble of claim 6.

The first element of claim 6 recites, "a code sequence generator for generating a code sequence having a second length by cyclic extension of a code sequence having a first length, and performing a circular shift to the code sequence having the second length." As shown in the previous paragraph, Zhuang 327 states it is directed to apparatus including a subscriber station. The functions of this element were shown to be disclosed by Zhuang327 (and, with regard to the circular shift, Hou) in the discussion above relating to the first two steps of claim 1. Zhuang327 discloses a subscriber station comprising a processor that selects an access sequence and generates an access code. *Id*. at 18:4-36 (claim 21). In addition, Zhuang327 states:

> It will be appreciated the base and subscriber stations described herein may be comprised of one or more conventional processors and unique stored program instructions that control the one or more processors to implement, in conjunction with certain non-processor circuits, some, most, or all of the functions of the base and subscriber stations described herein. . . . Alternatively, some or all functions could be implemented by a state machine that has no stored program instructions, in which each function or some combinations of certain of the functions are implemented as custom logic. Of course, a combination of the two approaches could be used. Thus, methods and means for these functions have been described herein.

Ex. 1007, 14:22–39; *see also* Pet. 30–33 (citing Wells Decl. ¶¶ 139–144). Accordingly, the subscriber station of Zhuang327 is a code sequence

generator, as it is an apparatus which performs the functions set forth in the first element of claim 6.

Patent Owner argues that Zhuang327 fails to disclose the first element of claim 6 because, "Zhuang327, instead of applying a circular shift on the cyclically extended sequence, performs a 'cyclic shift' on a signal only after taking the Inverse Fast Fourier Transformation of the sequence." PO Resp. 3. And with regard to the combination of Zhuang327 and Hou, Patent Owner argues, "Petitioners' obviousness combination with Hou to cure the Zhuang327 deficiency results in a system and method with additional complexity with no additional benefits, and accordingly is not supported by a motivation to combine or modify Zhuang327." *Id*. We do not find either of these arguments persuasive.

Zhuang327 discloses, "generating a code sequence having a second length by cyclic extension of a code sequence having a first length." Patent Owner does not argue to the contrary and acknowledges as much. PO Resp. 10 ("Zhuang327 describes a method of generating access signals whereby a first code sequence is generated by cyclic extension of a base sequence.") Whether an additional mathematical operation such as an Inverse Fast Fourier Transformation (IFFT) of the sequence is performed, Zhuang327 discloses generating a code sequence having a second length by cyclic extension of a code sequence having a first length under the plain and ordinary meaning of the first element of claim 6.[16] And Patent Owner does not dispute that Zhuang 327 discloses performing a circular shift to a code

[16] Patent Owner does not contend that the IFFT changes the length. Tr. 53:12–14, 54:18–22.

sequence having the second length which was generated through the cyclic extension and IFFT.

The purpose of the IFFT is to transform a frequency domain signal to a time domain signal, which is necessary in processing the access sequences. Ex. 1007, 10:12–16 (Zhuang327) ("Since the access sequence is used to modulate the subcarriers in the chosen sub-band, the time-domain access signal can be conveniently generated by taking an Inverse Fast Fourier Transformation (IFFT) of the frequency-domain sequence."). The '916 patent describes performing an IFFT for this same purpose prior to transmitting the code symbols of the sequence. Ex. 1001, 4:46–49 ("the data symbols mapped to subcarriers are processed by an inverse fast Fourier transform (IFFT) module 15 [of Figure 1] which transforms the data symbols into a signal in a time domain."). And Patent Owner acknowledges "[t]he plain language of the claims is agnostic as to the domain of the generated code sequences." PO Resp. 25. For these reasons, we disagree with Patent Owner that the inclusion of an IFFT between the cyclic extension and the cyclic shift prevents Zhuang327 from reading on the first element of claim 6.

With regard to the rationale for combining Zhuang327 and Hou, Patent Owner argues Petitioners failed to consider that adding a circular shift in the frequency domain as taught by Hou to the process disclosed in Zhuang 327 "would add complexity to the access signal generation" because "[t]he additional complexity would result in additional computational power expended by the subscriber stations with no added benefit." PO Resp. 31–32. Patent Owner argues there would be no added benefit because

Zhuang327 already discloses performing a circular shift. PO Resp. 28–32. Patent Owner misinterprets the proposed combination of Zhaunag327 and Hou. Petitioners rely on Hou for its teaching that a circular shift could be performed in both the frequency and time domains (or, stated differently, prior to, or after, an IFFT). Reply 19 ("it would be predictable to modify Zhuang327's circular shift by moving it from the time domain to the frequency domain as taught by Hou."); *see also* Pet. 52 (Zhuang327 "discloses that circular shift of a code sequence can be performed in the frequency domain or in the time domain, as alternative embodiments.") In addition, Patent Owner's argument regarding added complexity with no added benefit is not supported by any evidence and is contradicted by the testimony of Petitioners' expert, Dr. Wells. Reply 17–19. Dr. Wells testified, "Zhuang 327 performs a circular shift in the time domain to generate a plurality of sequences. But you can perform other circular shifts to generate even more possible sequences." Ex. 2006, 21:24–22:2.

We find the cited art discloses all the limitations of the first element of claim 6, and that there was sufficient reason for a person of ordinary skill in the art to combine the disclosures of Zhuang327 and Hou as Petitioners suggest.

The second element of claim 6 recites, "a transmitting unit for transmitting the circular shifted code sequence having the second length." As shown by Petitioners (Pet. 33–34 (citing Wells Decl. ¶¶ 164–165)), Zhuang327 discloses:

> It will be appreciated the base and subscriber stations described herein may be comprised of one or more conventional processors and unique stored program instructions that control

> the one or more processors to implement, in conjunction with certain non-processor circuits, some, most, or all of the functions of the base and subscriber stations described herein. The non-processor circuits may include, but are not limited to, a radio receiver, a radio ***transmitter***, signal drivers, clock circuits, power source circuits, and user input devices.

Ex. 1007, 14:22–31 (emphasis added). The functions of this element were shown to be taught by the cited art in the discussion above relating to the third step of claim 1. We find Zhuang327 discloses all the limitations of the second element of claim 6.

The remaining three elements of claim 6 recite:

> wherein the first length is a largest prime number smaller than the second length,
>
> wherein the cyclic extension of the code sequence having the first length is performed such that a part of the code sequence having the first length, having a length corresponding to a difference between the first length and the second length, is added to either a start or an end of the code sequence having the first length, and
>
> wherein the circular shift is performed to the code sequence having the second length such that either a rear portion of the code sequence having the second length moves to a start of the code sequence having the second length, or a front portion of the code sequence having the second length moves to an end of the code sequence having the second length.

Zhuang327 discloses these elements as shown above with regard to claim 1. Hou teaches the elements of the last "wherein" element as shown above with regard to claim 1. Patent Owner presents no argument or evidence to the contrary. We find the cited art discloses all the limitations of the "wherein" clauses of claim 6.

We conclude that Petitioners demonstrate, by a preponderance of the evidence, that claim 6 is unpatentable under 35 U.S.C. § 102 over Zhuang327 and under 35 U.S.C. § 103 over Zhuang327 and Hou.

2. Dependent Claims 7–10

Claim 7 recites the same element as claim 2, claim 8 recites the same element as claim 3, and claim 9 recites the same element as claim 4, and claim 10 recites the same element as claim 10. As shown above with regard to claims 2–5, respectively, the cited art teaches the elements recited in claims 7–10.

Patent Owner fails to contest any part of Petitioners' showing with regard to dependent claims 7–10. *See generally* PO Resp. Based on this record, we conclude that Petitioners demonstrate, by a preponderance of the evidence, that claims 7–10 are unpatentable.

III. CONCLUSION

For the foregoing reasons, we conclude that Petitioners have proven, by a preponderance of the evidence, that claims 1–10 are unpatentable.

IV. ORDER

It is

ORDERED that, based on a preponderance of the evidence, claims 1–10 of US 7,746,916 B2 are held to be unpatentable;

FURTHER ORDERED that, because this is a final written decision, parties to this proceeding seeking judicial review of our decision must comply with the notice and service requirements of 37 C.F.R. § 90.2.

PETITIONERS:

Walter Renner
IPR00035-0006IP1@fr.com

Charles McMahon
cmcmahon@mwe.com

Roberto Devoto
PTABInbound@fr.com

Hersh Mehta
hmehta@mwe.com

James Glass
jimglass@quinnemanuel.com

Kevin Johns
kevinjohnson@quinnemanuel.com

Todd Briggs
toddbriggs@quinnemanuel.com

Stephen Korniczky
skorniczky@sheppardmullin.com

Ericka Schulz
eschulz@sheppardmullin.com

PATENT OWNER:

Cyrus Morton
cmorton@robinskaplan.com

Ryan Schultz
rschultz@robinskaplan.com