Trials@uspto.gov
571-272-7822

Paper No. 11
Entered: December 20, 2017

UNITED STATES PATENT AND TRADEMARK OFFICE

BEFORE THE PATENT TRIAL AND APPEAL BOARD

APPLE, INC., MICROSOFT CORPORATION,
MICROSOFT MOBILE OY, MICROSOFT MOBILE INC.,
SAMSUNG ELECTRONICS CO., LTD.,
SAMSUNG ELECTRONICS AMERICA, INC.,
ZTE (USA) INC., HTC CORPORATION, and
HTC AMERICA, INC,
Petitioners,

v.

EVOLVED WIRELESS LLC,
Patent Owner.

Case IPR2016-01177[1]
Patent 7,768,965 B2

Before WILLIAM V. SAINDON, CHRISTOPHER L. CRUMBLEY, and PATRICK M. BOUCHER, *Administrative Patent Judges*.

CRUMBLEY, *Administrative Patent Judge*.

FINAL WRITTEN DECISION
35 U.S.C. § 318 and 37 C.F.R. § 42.73

[1] IPR2016-01310 has been consolidated with this proceeding.

I. INTRODUCTION

In this *inter partes* review trial, instituted pursuant to 35 U.S.C. § 314, Petitioners Apple, Inc., Microsoft Corporation, Microsoft Mobile Oy, Microsoft Mobile Inc., Samsung Electronics Co., Ltd., Samsung Electronics America, Inc., ZTE (USA) Inc., HTC Corporation, and HTC America, Inc. (collectively, "Petitioners") challenge the patentability of claims 1–3, 8, and 9 of U.S. Patent No. 7,768,965 B2 ("the '965 patent," Ex. 1001), owned by Evolved Wireless LLC ("Patent Owner").

We have jurisdiction under 35 U.S.C. § 6(b). This Final Written Decision, issued pursuant to 35 U.S.C. § 318(a), addresses issues and arguments raised during trial. For the reasons discussed below, we determine that Petitioners have proven, by a preponderance of the evidence, that claims 1–3, 8, and 9 of the '965 patent are unpatentable.

A. Procedural History

On June 17, 2016, Petitioners Apple, Inc., Microsoft Corporation, Microsoft Mobile Oy, and Microsoft Mobile Inc. requested an *inter partes* review of claims 1–3, 8, and 9 of the '965 patent. Paper 2, "Pet." Patent Owner filed a Preliminary Response. Paper 6.

On June 29, 2016, Petitioners Samsung Electronics Co., Ltd., Samsung Electronics America, Inc., ZTE (USA) Inc., HTC Corporation, and HTC America, Inc. filed a Petition in IPR2016-01310, also requesting an *inter partes* review of claims 1–3, 8, and 9 of the '965 patent on the same grounds raised in the present proceeding. IPR2016-01310, Paper 2. Patent Owner filed a Preliminary Response. IPR2016-01310, Paper 6.

In a Decision on Institution of *Inter Partes* Review (Paper 7, "Dec. on Inst."), we instituted trial as to claims 1–3, 8, and 9 on the following grounds of unpatentability:

1. Whether claims 1, 3, and 8 are unpatentable under 35 U.S.C. § 102(b) as anticipated by Schulist;[2]
2. Whether claims 2 and 9 are unpatentable under 35 U.S.C. § 103(a) as having been obvious over Schulist and Popovic;[3]
3. Whether claims 1, 3, and 8 are unpatentable under 35 U.S.C. § 103(a) as having been obvious over Schulist and Rao;[4] and
4. Whether claims 2 and 9 are unpatentable under 35 U.S.C. § 103(a) as having been obvious over Schulist, Rao, and Popovic.

Dec. on Inst. 20. Because the Petition in IPR2016-01310 was substantively identical to the Petition in IPR2016-01177, we also instituted trial on the second Petition and consolidated the proceedings under this *inter partes* review. IPR2016-01310, Paper 7. Pursuant to our consolidation order, the Petitioners filed consolidated post-institution papers and presented consolidated oral argument.

Following institution of trial, Patent Owner filed a Response (Paper 13, "PO Resp."), and Petitioners filed a Reply (Paper 16, "Pet. Reply").

Petitioners supported the Petitions with the Declaration of Jonathan Wells, Ph.D. Ex. 1003. Patent Owner took cross-examination testimony of

---

[2] PCT Publication No. WO 2004/030392 A1 to Schulist et al. (published Apr. 8, 2004) (Ex. 1005).

[3] PCT Publication No. WO 2007/082409 A1 to Popovic et al. (filed Jan. 18, 2006) (Ex. 1006).

[4] U.S. Patent Publication No. 2007/0291708 A1 to Rao (filed June 19, 2006) (Ex. 1011).

Dr. Wells via deposition and submitted the transcript of that deposition. Ex. 2001. Patent Owner did not submit direct testimony of any witnesses with its Response.

Oral hearing was requested by both parties (Papers 17, 18), and argument before the Board was held September 14, 2017. A transcript of the oral hearing is included in the record. Paper 26, "Tr." Both parties filed with the Board demonstrative exhibits that were used during the oral hearing. Exs. 1016, 2002.

B. The '965 Patent

The '965 patent, titled "Method For Transmitting And Receiving Signals Based On Segmented Access Scheme And Method For Allocating Sequence For The Same," issued August 3, 2010, from U.S. Patent Application No. 12/440,869. Ex. 1001, (54), (45), (21). The '965 patent relates to random access procedures for wireless communications systems, in which a user equipment ("UE") obtains synchronization information with the network by transmitting a signal from the UE to a base station on a random access channel ("RACH"). Ex. 1001, 1:34–36. The signal includes a preamble sequence, which is randomly selected from a set of available preamble sequences. *Id.* at 1:18–24, 4:54–65.

The '965 patent addresses the problem of "collision," wherein two UEs on the same cell randomly select the same RACH and preamble, through the use of a "segmented access scheme." *Id.* at 4:1–5, 9:20–25. Under such a scheme, the set of preambles from which a UE may choose differs depending on various criteria. *Id.* at 9:20–25. The '965 patent discloses that one such criterion is the location of the UE within the cell,

because the length of the required preamble sequence varies depending on the UE location. *Id.* at 8:37–56. For example, a UE at the edge of the cell may experience a large degree of signal loss (path loss), requiring multiple repetitions of the preamble sequence. *Id.* at 8:52–55. A UE close to the base station, by contrast, experiences a lesser degree of path loss, and numerous repetitions of a preamble may not be efficient. *Id.* at 8:57–9:2. The ’965 patent allocates preamble sequences into sets, and the set available to a particular UE may be determined according to the location of the UE within the cell, as determined by the degree of path loss experienced. *Id.* at 9:36–44, 64–66.

The ’965 patent also discloses reducing the risk of collision by allocating preamble sequences into sets according to the reason for the uplink request by the UE. *Id.* at 14:10–19. The patent notes that there are more requests due to cell hand-off at the outer edges of the cell region, whereas near the center of the cell is it more likely a request will be due to power-up, for example. *Id.* at 14:20–29. “[I]f more protection [i.e., allocating more sequences from which to choose] is carried out on the more frequently occurring case, it is able to reduce probability of collision occurrence.” *Id.* at 14:26–29. Figure 13 of the ’965 patent discloses that both location (path loss) and reason for the request can be used together, as part of a segmented access scheme:

FIG. 13

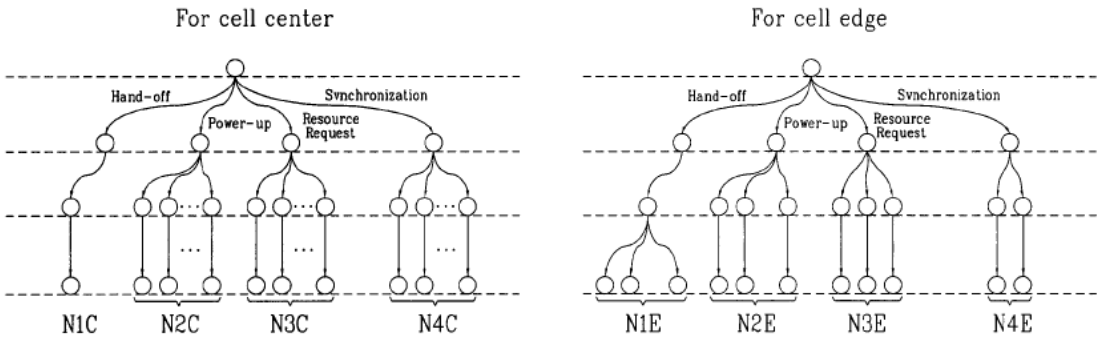

Figure 13 of the ’965 patent depicts allocating preamble sequences according to reason for the request, with the number of sequences allocated to each reason differing according to the location of the UE within the cell (cell center vs. cell edge). *Id.* at 15:40–44.

The ’965 patent contains a number of exemplary embodiments, each of which uses at least the location of the UE to allocate preamble sequence sets. *See id*. at 9:64–66 (“An aspect of adjusting a setup for an RACH or a ranging channel based on a location of a UE within a cell is common to the respective embodiments of the present invention.”).

C. Illustrative Claim

Of the challenged claims, claims 1 and 8 are independent; claim 1 recites a method for transmitting a signal whereas claim 8 recites an apparatus for transmitting a signal, but the claims are otherwise substantively similar. Claim 1 is illustrative of the challenged claims and is reproduced below:

> 1. A method for a specific user equipment (UE) to transmit a signal via a random access channel, the method comprising:
>
> selecting one random access preamble sequence set from among predetermined random access preamble sequence sets considering at least one of a size of information to be transmitted by the specific UE and a degree of a path loss;
>
> randomly selecting a specific sequence within the selected random access preamble sequence set; and
>
> transmitting the selected sequence via the random access channel.

Ex. 1001, 26:57–67.

II. ANALYSIS

A. Claim Construction

In an *inter partes* review, we construe claims by applying the broadest reasonable interpretation in light of the specification. 37 C.F.R. § 42.100(b); *see also Cuozzo Speed Techs., LLC v. Lee*, 136 S. Ct. 2131 (2016). Under the broadest reasonable interpretation standard, and absent any special definitions, claim terms are given their ordinary and customary meaning, as would be understood by one of ordinary skill in the art in the context of the entire disclosure. *In re Translogic Tech. Inc.*, 504 F.3d 1249, 1257 (Fed. Cir. 2007). Any special definitions for claim terms or phrases must be set forth with reasonable clarity, deliberateness, and precision. *In re Paulsen*, 30 F.3d 1475, 1480 (Fed. Cir. 1994).

In our Decision on Institution, we noted that Petitioners requested that we construe four claim terms: "considering at least one of a size of information to be transmitted by the specific UE and a degree of a path loss" (all claims), "a sequence selecting module" (claims 8 and 9), "an access

module" (claims 8 and 9), and "accessing a random access channel using the specific sequence selected by the sequence selecting module" (claims 8 and 9). Dec. on Inst. 7. Patent Owner contested only the "considering at least one of" limitation, and we determined that only this term required construction for purposes of institution. *Id.* Following institution, the parties continued to dispute the meaning of the "considering at least one of" limitation, but neither party argued any other terms. We, therefore, address only the construction of "considering at least one of," as construction of the remaining terms is not necessary to resolving the parties' dispute.

Our analysis begins with the language of the claims themselves. *See Interactive Gift Express, Inc. v. Compuserve Inc.*, 256 F.3d 1323, 1331 (Fed. Cir. 2001) ("In construing claims, the analytical focus must begin and remain centered on the language of the claims themselves."). Then, we turn to the specification of the '965 patent, to ensure that we arrive at the broadest reasonable interpretation consistent with the specification. *See In re Suitco Surface, Inc.*, 603 F.3d 1255, 1260 (Fed. Cir. 2010).[5]

1. Claim Language

As set forth above, the disputed claim phrase is, in relevant part, "considering at least one of a size of information to be transmitted by the specific UE and a degree of a path loss." The parties dispute whether the term is *conjunctive*—meaning *both* size of information *and* degree of path

[5] Neither party has argued that the prosecution history of the '965 patent sheds any light on the proper construction of "considering at least one of."

loss must be considered—or *disjunctive*—meaning that the claim is satisfied if *either* size of information *or* degree of path loss is considered.

The Federal Circuit has held that the plain and ordinary meaning of "at least one of" is "one or more," but that when the phrase is used in a claim, the issue is what "at least one of" is used to modify. *See SuperGuide Corp. v. DirecTV Enters., Inc.*, 358 F.3d 870, 886 (Fed. Cir. 2004). In *SuperGuide*, the court held that, when "[t]he phrase 'at least one of' precedes a series of categories of criteria, and the patentee used the term 'and' to separate the categories of criteria," the phrase connotes a conjunctive list and requires selecting at least one value for each category. *Id.* For example, in *SuperGuide*, the claim phrase "storing at least one of a desired program start time, a desired program end time, a desired program service, and a desired program type" was interpreted as requiring storing at least one desired program start time, at least one desired program end time, and so forth. *Id.* at 884.

In this case, Patent Owner argues that we should apply the rationale of *SuperGuide* to the claims at issue, and construe "considering at least one of" as conjunctive. PO Resp. 15–16. Patent Owner characterizes the holding of *SuperGuide* as establishing a "normal conjunctive meaning" that "applies unless the specification or claims imply a broader meaning." *Id.* at 16.

Courts have not interpreted *SuperGuide* as setting forth a *per se* rule that the use of "at least one of" followed by "and" connotes a conjunctive list, however. *See Fujifilm Corp. v. Motorola Mobility LLC*, Case No. 12-CV-03587-WHO, 2015 WL 1265009, at *8 (N.D. Cal. Mar. 19, 2015) (summarizing cases and noting that "*SuperGuide* did not erect a universal rule of construction for all uses of 'at least one of' in all patents"). In

particular, courts have found *SuperGuide* inapplicable when the listed items following "at least one of" are not categories containing many possible values. *See id.*; *see also TQ Delta, LLC v. Comcast Cable Commc'ns, LLC*, No. 1:15-CV-00611-RGA, 2016 WL 7013481, at *8 (D. Del. Nov. 30, 2016) (list following "at least one of" was of parameters to be selected from, not categories). The Board has also distinguished *SuperGuide* on this basis. *See Hewlett-Packard Co. v. MPHJ Tech. Invs., LLC*, Case IPR2013-00309, slip op. at 8 (PTAB Nov. 21, 2013) (Paper 9); *Daifuku Co., Ltd. v. Murata Machinery, Ltd.*, Case IPR2015-00083, slip op. at 4–5 (PTAB May 3, 2016) (Paper 63).

Relevant to our inquiry, therefore, is whether the items that follow "at least one of" in the challenged claims of the '965 patent are categories that may have multiple values (such as in *SuperGuide*) or individual parameters having only one value. Both independent claims recite "considering at least one of a size of information to be transmitted by the specific UE and a degree of a path loss." According to Petitioners, these items are individual parameters, because:

> [I]t is not possible for a UE to consider more than one size of information to be transmitted or more than one degree of a path loss. . . . At the particular time the preamble sequence set is selected, only one of the sets of values would represent the true path of the path loss and information size metrics.

Pet. 16.

Patent Owner disagrees, contending that the embodiment depicted in Figure 5 of the '965 patent involves consideration of two degrees of path loss, because "[t]he only way a UE can determine based on its own path loss that it is located in region R2 is by determining that its path loss is greater

than the path loss at the boundary with R1 and less than the path loss at the boundary with R3—a consideration of two degrees of path loss." PO Resp. 26. Figure 5 depicts:

FIG. 5

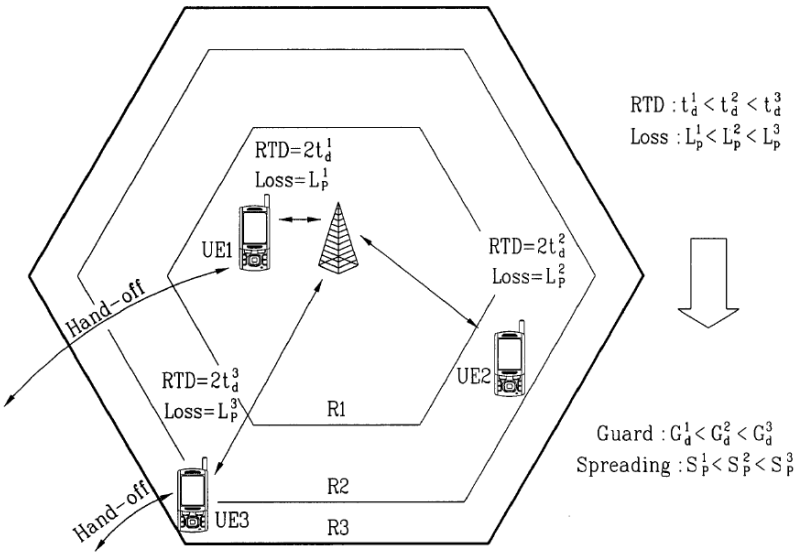

Figure 5 of the '965 patent depicts a cell having three regions R1, R2, and R3, with UE1 located in R1, UE2 located in R2, and UE3 located in R3.

Patent Owner also cites the cross examination testimony of Petitioners' expert, Dr. Wells, who agreed that one way a UE could determine its region was to compare its path loss with the path losses that define the boundaries of the region. *Id.* at 27 (citing Ex. 2001, 10:3–23). With regard to size of information to be transmitted, Patent Owner argues that multiple sizes could be considered "[i]f the range of potential sizes of information that a UE needs to send following a resource request were allocated into three or more groups." *Id.* at 27–28.

Petitioners have the better of the arguments on this point. At the time a UE initiates a transmission, there is only one degree of path loss and one

size of information to be transmitted that is relevant to that particular UE. Patent Owner's arguments are based on conjecture and speculation about particular ways a system under the patent could be structured, but have insufficient support in the language of the specification. The specification makes no reference to dividing ranges of potential sizes of information into subsets. Nor could Patent Owner's counsel direct us to any portion of the specification in which a UE determining which region of a cell it was located in was described as "considering" multiple degrees of path loss. Tr. 66:20–68:3.

Even in the supposed admission of Dr. Wells that Patent Owner alleges (PO Resp. 27), Dr. Wells was asked about "compar[ing]" a path loss against the path loss at the borders of a range, not "considering" those multiple degrees of path loss. Ex. 2001, 10:15–17. Dr. Wells' testimony, therefore, has limited relevance to the meaning of "considering" in the '965 patent. We find no basis to conclude, as Patent Owner urges, that a person of ordinary skill in the art would describe determining whether a UE's degree of path loss fell within a particular range as "considering multiple degrees of path loss." Figure 5 does not depict "considering" two degrees of path loss per UE; at best, it depicts a degree of path loss for each of UE1 (L_p^1), UE2 (L_p^2), and UE3 (L_p^3) and does not depict a degree of path loss for the region boundaries at all. Ex. 1001, Fig. 5. Nor does the portion of the specification describing Figure 5 discuss determining the region through a comparison to the degree of path loss at a region boundary. *See id*. at 8:23–9:11.

After reviewing the record, we conclude that at the time it is performing the method claim, a UE can only consider one degree of path

loss and one size of information to be transmitted. Because they are parameters with only a single value, not categories from which values may be selected, the claim language here only makes sense if it is disjunctive. In other words, since there can be only one value for each of A and B at a given time, "considering at least one of A and B" as used here must mean "considering A, B, or both."

2. Embodiments of the Invention Described In the Specification

Beyond the language of the claims themselves, both parties direct us to the embodiments disclosed in the specification as supporting their respective constructions. Petitioners note that none of the embodiments disclose using information size, and some use only location. Pet. 14–15 (citing Ex. 1001, 19:4–43). This, Petitioners contend, means a conjunctive claim construction that requires both size and location (path loss) to be considered is not correct, as the claim would not cover these embodiments. *Id.*

Patent Owner directs us to the same embodiments, but draws the opposite conclusion: it contends that all disclosed embodiments in the '965 patent rely, at least in part, on location. PO Resp. 17–19. Indeed, as Patent Owner observes, the '965 patent states that "adjusting a setup for an RACH or a ranging channel based on a location of a UE within a cell is common to the respective embodiments of the present invention." Ex. 1001, 9:64–66. Patent Owner argues that adopting Petitioners' construction would result in a claim that covers methods that only consider the size of information to be transmitted, which are embodiments outside the scope of the invention set forth in the specification. PO Resp. 19–23.

a. Whether the Specification Discloses Considering Size of Information to be Transmitted

In our Decision instituting trial, we noted that:

> [W]e are unable to find in the written description of the invention any discussion of considering the size of information to be transmitted. Therefore, regardless of whether we adopt a conjunctive or disjunctive construction, one of the two items listed in the claims after "at least one of" is discussed in *none* of the patent's embodiments.

Dec. 11–12.

In its Response, Patent Owner disputes this characterization of the specification. Patent Owner observes that the '965 patent discloses allocating sequences based on a consideration of the reason the UE is accessing the RACH, including a resource request, a hand-off, a power-up, or a synchronization. PO Resp. 20–21 (citing Ex. 1001, Fig. 13). According to Patent Owner, because a resource request "indicates a requirement for the UE to transmit data," this necessarily involves considering the size of the information that will be transmitted. *Id.* at 21. At oral argument, Patent Owner's counsel argued that under the LTE standard, a resource request has a minimum size, so any resource request by definition must involve a nonzero size of information to be transmitted. Tr. 54:13–19.

Petitioners respond that Patent Owner's argument fails to identify any instance where the specification of the '965 patent correlates the reason for accessing the RACH with the size of information to be transmitted. Pet. Reply 9. Petitioners also note that Patent Owner's claim that a person of ordinary skill in the art would understand a "resource request" inherently to involve the size of information to be transmitted is unsupported by any testimony or other evidence of record, and is solely attorney argument. *Id.*

Based on our review of the record, we agree with Petitioners that there is no reason to believe that a person of ordinary skill in the art would interpret the cause of the access request to be linked to the size of the information to be transmitted. The ’965 patent discloses that segmenting preamble codes according to the cause of the UE accessing the RACH helps prevent collision because the “frequency in accessing the RACH or the ranging channel may differ” depending on the reason for the request. Ex. 1001, 13:20–25. In other words, in some regions of the cell, certain reasons for making a request are more prevalent than others, and it improves collision avoidance if a segmented access scheme allocates more preambles to the more frequently-requested reasons. *Id.* at 14:61–65, 15:17–25. We note that this advantage is obtained irrespective of the size of the information to be transmitted; according to the specification, all that is important is the frequency of certain types of requests, not the size of the information that will be transmitted.

Nor do we find it persuasive that, as Patent Owner argues, every resource request is understood to be for a nonzero amount of data. Even if this is true, it does not follow that the patent, in considering the *reason* for a resource request, necessarily also considers the *size* of that request. All briefs filed by parties before the Board contain a nonzero number of words, but considering the arguments raised by the parties in the brief does not necessarily require considering the number of words used.

Finally, as we noted in our Decision instituting trial, we find it significant that claim 5, which depends from claim 1, recites that the preamble sequence sets are “*additionally* discriminated in accordance with a cause for each user equipment to access the random access channel.” Ex.

1001, 27:10–13 (emphasis added). Claim 1 already recites "a size of information to be transmitted"; the fact that claim 5 adds a distinct, additional limitation for "cause for . . . access" implies strongly that the inventors considered the concepts to be distinct. We, therefore, maintain our conclusion that the disclosure in the specification of using the reason for the request to segment preambles does not disclose using the size of the information to be transmitted.[6]

We, therefore, conclude as we did in our Decision on Institution that the specification of the '965 patent does not disclose any embodiment of the invention that segments an access scheme based on the size of information to be transmitted. We are thus faced with the choice of whether to adopt Petitioners' disjunctive construction—which would cover all embodiments in the specification that use degree of path loss, as well as many undisclosed embodiments—or Patent Owner's conjunctive construction—which would cover none of the disclosed embodiments, as they do not use size of information to be transmitted. As we noted in our prior Decision, the law of

---

[6] Nor do we find persuasive Patent Owner's argument that claim 1's "size of information to be transmitted" could be understood to refer to considering the reason for a request only if it is a resource request (and therefore has a particular size of information to be transmitted), and then claim 5 could refer to an additional step of considering the *other* causes for an access request. PO Resp. 21–24. As Petitioners note (Pet. Reply 9–13), and we agree, the specification makes no such distinction, and Patent Owner's argument is pure speculation (without any testimonial support) regarding a system that *could* be devised. Indeed, the specification only shows one "considering" step based on cause, not multiple steps. Ex. 1001, Figs. 13, 15. Furthermore, we note claim 7, which depends from claim 5, expressly lists a "resource request" as one of the "cause[s]" of claim 5. *Id*. at 27:19–21.

claim construction disfavors constructions that do not cover the embodiments disclosed in the patent. *Oatey Co. v. IPS Corp.*, 514 F.3d 1271, 1276 (Fed. Cir. 2008) ("We normally do not interpret claim terms in a way that excludes embodiments disclosed in the specification."). While there may be other patentability issues with a claim that covers a number of embodiments not disclosed in the specification, those are enablement or written description questions beyond the scope of this *inter partes* review. We must construe the claims to give them the broadest scope consistent with the specification; here, Petitioners' construction is better supported by the specification.

b. Patent Owner's Disavowal Argument

Patent Owner makes an alternative argument in its Response, arguing that not only does every embodiment in the specification consider a degree of path loss, but that the '965 patent provides an express definition that *requires* using the location of the UE[7] as part of the segmented access scheme. Put differently, Patent Owner advocates that the specification of the '965 patent disavows or disclaims all embodiments that do not at least consider the location of the UE in selecting a preamble set. Because Petitioners' proposed construction would encompass size-based segmented access schemes that do not consider location, Patent Owner argues that the proposed construction cannot be correct. PO Resp. 18–19. As support,

[7] As noted above, the '965 patent discloses using degree of path loss as a proxy for location for the UE within the cell. Ex. 1001, 9:36–44, 9:64–66. Patent Owner uses "location" as shorthand for "degree of path loss" (Tr. 42:22–43:2), and we use the terms interchangeably.

Patent Owner cites *In re Man Machine Interface Techs. LLC*, 822 F.3d 1282, 1286 (Fed. Cir. 2016), for the proposition that "[t]he broadest reasonable interpretation of a claim term cannot be so broad as to include a configuration expressly disclaimed in the specification." PO Resp. 14, 17.

At the outset, we note that the holding of *Man Machine Interface* quoted by Patent Owner is of limited applicability because it relates to an embodiment *expressly* disclaimed. *See Man Machine Interface*, 822 F.3d at 1286 ("the specification *expressly* distinguishes the remote control device from a desk-bound device like the one disclosed in [the prior art]" (emphasis added)). Though Patent Owner first argued in its Response that the '965 patent contained an explicit disclaimer (PO Resp. 28), during oral argument counsel for Patent Owner conceded that there is no explicit disavowal in the specification. Tr. 50:14–21 ("We mean it's an implicit disavowal."). Rather, counsel argued that the disavowal is implicit based on the entirety of the disclosure. *Id.*

Furthermore, even if the rule of *Man Machine Interface* applies to implicitly disavowed claim scope, the standard for such implicit disavowal is a very high one. The Federal Circuit has held that disclaimer must be "clear and unmistakable," and that it is "not enough that the only embodiments, or all of the embodiments, contain a particular limitation." *Thorner v. Sony Computer Entm't Am. LLC*, 669 F.3d 1362, 1366–67 (Fed. Cir. 2012). On the other hand, "[w]here the specification makes clear that the invention does not include a particular feature, that feature is deemed to be outside the reach of the claims of the patent." *SciMed Life Sys., Inc. v. Advanced Cardiovascular Sys., Inc.*, 242 F.3d 1337, 1341 (Fed. Cir. 2001). In *SciMed*, the specification did not contain an express disavowal, but rather

distinguished the prior art on the basis of a particular feature, contained numerous references to the feature as the "present invention," and stated that the feature was included in "all embodiments of the present invention contemplated and disclosed herein." *Id.* at 1343.

Patent Owner argues that the '965 patent rises to the level of implicit disavowal found to be limiting in *SciMed*. PO Resp. 17–19. To be sure, the specification does contain some language that is similar to that in *SciMed*. For example, the '965 patent states that "the present invention proposes a segmented access scheme" (Ex. 1001, 3:58–59) and further states that:

> In the following description, instead of setting an RACH or a ranging channel to meet the common requisites for entire UEs in a cell, all the schemes for setting requisites for an RACH or a ranging channel to differ in accordance with a location of each UE within a cell is *generically named "segmented access scheme."*

Ex. 1001, 9:20–25 (emphasis added). The specification also recites that "[a]n aspect of adjusting a setup for an RACH or a ranging channel based on a location of a UE within a cell is common to the respective embodiments of the present invention." *Id.* at 9:64–65. Taken together, Patent Owner argues that these passages indicate an intention to define a "segmented access scheme" as requiring location-based differentiation. PO Resp. 17–19.

Though Patent Owner's argument is not without some merit, we cannot conclude that the expressions cited in the specification evidence a clear, unmistakable disavowal that rises to the level the Federal Circuit found sufficient in *SciMed*. The catheters in *SciMed* came in one of two discrete variants: coaxial-lumen or dual-lumen, and the patent specifically distinguished the prior art dual-lumen catheters from the claimed invention.

See SciMed, 242 F.3d at 1343. The ’965 patent, by contrast, does not separate out segmented access schemes that use location into a discrete group from schemes that segment preambles based on another criterion. Furthermore, the Federal Circuit found it significant in *SciMed* that the patent characterized “all embodiments of the present invention” as using coaxial lumens (*id.* at 1344), whereas the ’965 patent contains no similar statement regarding “all embodiments.” The passages cited by Patent Owner refer to “all the schemes” in “the following description,” or “the respective embodiments of the present invention,” which is not as absolute as *SciMed*’s “all embodiments” language. For example, the fact that “all the schemes” in “the following description” are location-based schemes leaves open the possibility that the ’965 patent also covers other, undisclosed embodiments that are not. Ex. 1001, 9:20–25.

In sum, although the specification of the ’965 patent discloses a number of embodiments that contain a particular feature (location-based segmented access schemes), and do not disclose any embodiments that do not have this feature, the Federal Circuit has found this insufficient to implicitly disavow embodiments without the feature. *See Thorner*, 669 F.3d at 1366 (“It is . . . not enough that the only embodiments, or all of the embodiments, contain a particular limitation. We do not read limitations from the specification into claims; we do not redefine words.”).

For these reasons, we do not conclude that the ’965 patent disavows segmented access schemes that do not use location. As such, Patent Owner’s argument that Petitioners’ construction would encompass embodiments that have been disavowed is not persuasive.

3. Conclusion

Based on the claim language and the analysis of *SuperGuide* and other cases, we conclude that "at least one of" here should be construed in the disjunctive, as Petitioners contend. Upon examining the specification of the '965 patent, furthermore, we conclude that the disjunctive construction is more consistent with the disclosed embodiments, and that the patent does not implicitly disavow segmented access schemes not based on a degree of path loss. For all of these reasons, we maintain our prior disjunctive construction of "considering at least one of a size of information to be transmitted by the specific UE and a degree of a path loss" as covering considering a size of information to be transmitted by the specific UE, considering a degree of a path loss, or considering both.

B. Anticipation by Schulist

We instituted trial on Petitioners' asserted ground that claims 1, 3, and 8 are unpatentable under 35 U.S.C. § 102(b) as anticipated by Schulist. Dec. on Inst. 13.

Schulist is directed to a method for requesting access to a node of a wireless communications network, which comprises determining information about a transmission path to the network node, and determining an identification code based on the determined transmission path information. Ex. 1005, (57). Figure 1 of Schulist depicts an exemplary 3rd Generation Partnership Project (3GPP) network comprising a network node and a plurality of user equipment (UEs). *Id.* at 10:5–9. The network uses a random access scheme wherein a preselected preamble sequence is randomly selected by a UE and transmitted on a physical random access

channel (PRACH) to initiate communication with the network node. *Id.* at 10:14–24, 11:17–25.

Schulist discloses that each UE determines transmission path information in the form of a path loss estimate, and classifies itself into a specific path loss class. *Id.* at 14:21–26. Each path loss class has a set of available preamble signatures assigned, as depicted in the following table, reproduced from Shulist:

Path Loss	Path Loss Class	Available Preamble Signa-tures
0 - 10 dB	1	1 - 4
> 10 - 20 dB	2	5 - 8
> 20 - 30 dB	3	9 - 12
> 30 dB	4	13 - 16

Id. at 14:30. The table shows that each path loss class corresponds to a range of degrees of path loss, and has a set of assigned preamble signatures.

Petitioners contend that Schulist discloses all limitations of claims 1, 3, and 8. For example, with respect to claim 1, Petitioners assert that Schulist discloses a method for a specific UE to transmit a signal via random access channel, referring to Schulist's disclosure of the UEs sending access request signals on the PRACH. Pet. 27–28. Petitioners also contend that Schulist selects a preamble sequence set from among predetermined preamble sequence sets, considering at least one of a size of information to be transmitted and a degree of a path loss, in that Schulist discloses sorting UEs into a path loss class, each of which has an associated preamble sequence set. *Id.* at 28–31.

Patent Owner contends that Schulist is not anticipatory, because it does not disclose considering a "size of information to be transmitted." PO

Resp. 30. Again, this argument is based on Patent Owner's claim construction argument that "considering at least one of" requires consideration of both degree of path loss and size of information to be transmitted, which we have rejected above. *Id.* Under the proper disjunctive construction, the claim requires consideration of only one of the two criteria, and Schulist discloses considering degree of path loss.

During oral argument, counsel for Patent Owner conceded that if the Board were to adopt Petitioners' disjunctive construction of "considering at least one of," then Schulist would anticipate on the ground set forth by Petitioners. Tr. 44. Based on our review of Schulist's disclosure, Petitioners' arguments for unpatentability (Pet. 24–41), and the testimony of Dr. Wells (Ex. 1003 ¶¶ 68–77), we agree.

For these reasons, we conclude that Petitioners have proven by a preponderance of the evidence that claims 1, 3, and 8 are unpatentable as anticipated by Schulist.

C. Obviousness over Schulist and Popovic

We instituted trial on Petitioners' asserted ground that claims 2 and 9 are unpatentable under 35 U.S.C. § 103 as having been obvious over the combined disclosures of Schulist and Popovic. Dec. on Inst. 15–16.

Popovic discloses a method for synchronizing uplinks between a base station and a mobile terminal using a random access channel (RACH). Ex. 1006, 7:26–8:5. In order to reduce risk of collision between different mobile terminals, Popovic discloses using a set of signature sequences from which each mobile terminal randomly selects a sequence. *Id.* at 8:5–10. Popovic discloses that these sequences can be Hadamard sequences, but that

Hadamard sequences have the drawback of mutual cross-correlation. *Id.* at 9:5–16. To overcome this drawback, Popovic proposes using zero-correlation zone sequences, in particular CAZAC sequences. *Id.* at 9:17–10:14.

Petitioners note that Schulist uses Walsh sequences to construct its preambles, and cite Dr. Wells' testimony that a person of ordinary skill in the art would have understood Walsh sequences to be mathematically related to the Hadamard sequences described in Popovic. Pet. 42–43 (citing Ex. 1003 ¶ 81). Petitioners, therefore, contend that a person of ordinary skill in the art would have modified the system of Schulist to replace its Walsh sequences with CAZAC sequences, just as Popovic discloses replacing Hadamard sequences with CAZAC sequences, to achieve the disclosed benefits of CAZAC sequences. *Id.* at 44–45.

During trial, Patent Owner did not challenge the combination of Schulist and Popovic, or address with any particularity the ground as advanced by Petitioners. PO Resp. 30. Patent Owner only relies on its argument regarding the construction of "considering at least one of," just as in the Schulist anticipation ground above. *Id.* Furthermore, Patent Owner has conceded the obviousness of claims 2 and 9, if we were to adopt Petitioners' construction of that phrase. Tr. 44. As we have concluded that Petitioners' disjunctive construction is correct, we agree with Patent Owner that Schulist and Popovic in combination disclose all elements of claims 2 and 9. Furthermore, Petitioners' articulated reason to combine Schulist and Popovic is supported by the record, given the link between Schulist's Walsh sequences and Popovic's Hadamard sequences testified to by Dr. Wells. Ex. 1003 ¶ 81. Patent Owner raises no argument regarding objective indicia of

nonobviousness. For these reasons, we conclude that claims 2 and 9 are unpatentable, as they would have been obvious over Schulist and Popovic.

D. Obviousness Grounds Based on Rao

Petitioners advance two alternative grounds of unpatentability which mirror the two set forth above, but with the addition of Rao to each ground. Pet. 47–62. Petitioners contend that, in the event that we determine that "considering at least one of" is conjunctive, and requires considering both a degree of path loss and a size of information to be transmitted, Rao discloses the latter. *Id.* at 47. We analyze these grounds as an alternative basis for potentially holding the claims unpatentable.

Rao discloses a communications system in which a mobile station transmits a preamble over a random access channel to a base station. Ex. 1011 ¶ 17. In one embodiment, the mobile station selects the preamble from a set of preambles, which may be Walsh preambles. *Id.* ¶ 21. The preambles maybe be partitioned into two or more classes, each of which corresponds to a data type defined based on one or more characteristics. *Id.* ¶ 22. Rao discloses that one such characteristic is an initial packet size. *Id.* By selecting a preamble according to the initial packet size, Rao's mobile station is able to communicate to the base station a request for resource allocation using the preamble itself, reducing initial latency. *Id.* ¶ 27.

Petitioners observe that both Schulist and Rao discuss partitioning the set of available preambles into subsets, with the difference being the criterion for the partition. Pet. 51–52. According to Petitioners, both references recognize that additional criteria beyond those considered explicitly in that reference may be used. *Id.* at 52. Petitioners contend that a

person of ordinary skill would have modified Schulist's method to divide preambles into sets according to both degree of path loss and Rao's size of information to be transmitted, and the Petition sets forth the steps the person would have undertaken to accomplish this modification. *Id.* at 52–55. The person of ordinary skill in the art would have had reason to make this modification, Petitioners assert, because it would have improved Schulist's system with the disclosed advantages of Rao (i.e., reducing latency by signaling a resource allocation through selection of a particular preamble). *Id.* at 56.

During trial, Patent Owner argued that a person of ordinary skill in the art would not have modified the system of Schulist to incorporate the size of information aspect of Rao. PO Resp. 31–42. In particular, Patent Owner challenges Petitioners' characterization of Schulist and Rao as "explicitly suggest[ing] a combination of their preferred criteria with other useful criteria." *Id.* at 33 (quoting Pet. 52). For example, Petitioners cited Schulist's statement that "in addition to the path loss the user equipment UE may determine other parameters" to segment an access scheme. Pet. 52 (quoting Ex. 1005, 14:16–19). Patent Owner contends that this is a mischaracterization of Schulist's disclosure, and that the sentence quoted in part by Petitioners reads in full, "Instead of or in addition to the path loss the user equipment UE may determine other parameters characteristic of the state of a transmission path to the base station BS, for example by means of measurements." Ex. 1005, 14:16–19. Patent Owner argues that the remainder of the sentence makes clear that by "other parameters," Schulist was referring to other ways of characterizing a transmission path, not other information about the transmission such as that suggested by Rao. PO Resp.

34–37. On cross examination, Dr. Wells agreed that the other parameters referred to in Schulist are other things characteristic of path loss. Ex. 2001, 12:12–14:9.

We agree with Patent Owner that neither Schulist nor Rao explicitly suggest combining their segmented access schemes with other types of access schemes. To the extent Petitioners' rationale to combine relies on an express teaching to combine (Pet. 52), it is insufficient. It does not necessarily follow, however, that either reference *forecloses* such a combination. Schulist and Rao are silent as to whether their segmented access schemes may incorporate other, undisclosed parameters.

Petitioners contend that a person of ordinary skill in the art would have recognized that partitioning preambles according to size of information to be transmitted—as disclosed in Rao—would improve the system of Schulist, which partitions preambles according to path loss. *Id.* at 56–57. As Dr. Wells testified, a person of ordinary skill

> would have recognized that, by combining the criteria taught by Schulist (*i.e.*, path loss) with the criteria taught by Rao (*i.e.*, initial data packet size), a user equipment would be able to further improve latency and more efficiently allocate resources by the base station through implicit transmission of more information using only the otherwise necessary preamble.

Ex. 1003 ¶ 101. This rationale does not depend on any explicit recognition in either reference that their respective segmented access schemes could be modified to incorporate additional criteria.

Patent Owner does not provide any argument or evidence in response to this aspect of Petitioners' rationale to combine. At oral argument, counsel for Patent Owner only noted that the Petition merely repeats the portion of

Dr. Wells' testimony quoted above, and contended that it is insufficient to carry Petitioners' burden of proof. Tr. 64. We find, in light of Dr. Wells' unchallenged testimony, that a person of ordinary skill in the art would have recognized the advantages of reducing latency through Rao's insight of communicating to a base station a request for resource allocation using the preamble itself, and would have incorporated this advantage into the Schulist system. In contrast to the persuasive testimony of Dr. Wells, we have been presented with no evidence to the contrary from Patent Owner, or any argument that such a modification would be beyond the level of ordinary skill in the art.

Upon review of the entirety of the record, therefore, we conclude that Petitioners have articulated reasoning with rational underpinning to support their argument why a person of ordinary skill in the art would have combined the disclosures of Schulist and Rao. As discussed above, Schulist and Popovic disclose all elements of the challenged claims save considering a size of information to be transmitted. To the extent that the "considering at least one of" phrase is conjunctive as Patent Owner argues, the size of information to be transmitted is disclosed by Rao. Ex. 1011 ¶ 22. The combination of Schulist and Rao, or Schulist, Popovic, and Rao, thus teach all limitations of the challenged claims.

For these reasons, we conclude that the combined disclosures of Schulist and Rao render obvious claims 1, 3, and 8, while Schulist, Popovic, and Rao render obvious claims 2 and 9.

III. CONCLUSION

For the foregoing reasons, based on a review of the complete record developed during trial, we conclude that Petitioners have proven, by a preponderance of the evidence, that claims 1–3, 8, and 9 are unpatentable.

IV. ORDER

Accordingly, it is:

ORDERED that claims 1–3, 8, and 9 of U.S. Patent No. 7,768,965 B2 are *unpatentable*;

FURTHER ORDERED that, pursuant to 35 U.S.C. § 318(b), upon expiration of the time for appeal of this decision, or the termination of any such appeal, a certificate shall issue confirming the patentability of claims 1–3, 8, and 9 of U.S. Patent No. 7,768,965 B2; and

FURTHER ORDERED that, because this is a Final Written Decision, parties to the proceeding seeking judicial review of the decision must comply with the notice and service requirements of 37 C.F.R. § 90.2.

For PETITIONERS:

W. Karl Renner
Roberto Devoto
David Holt
FISH & RICHARDSON P.C.
IPR00035-0007IP1@fr.com
PTABInbound@fr.com
PTABInbound@fr.com

For PATENT OWNER:

Cyrus Morton
Ryan Schultz
ROBINS KAPLAN LLP
cmorton@robinskaplan.com
rschultz@robinskaplan.com