Trials@uspto.gov
Tel: 571-272-7822

Paper 192
Entered: February 26, 2018

UNITED STATES PATENT AND TRADEMARK OFFICE

BEFORE THE PATENT TRIAL AND APPEAL BOARD

POLYGROUP LIMITED,
Petitioner,

v.

WILLIS ELECTRIC CO., LTD.,
Patent Owner.

Case IPR2016-01610 (Patent 8,454,186 B2)[1]
Case IPR2016-01612 (Patent 8,454,187 B2)[2]

Before WILLIAM V. SAINDON, JEREMY M. PLENZLER, and BARBARA A. PARVIS, *Administrative Patent Judges*.

SAINDON, *Administrative Patent Judge*, for the Board,
PLENZLER, *Administrative Patent Judge*, dissenting.

FINAL WRITTEN DECISION
Finding No Challenged Claims Unpatentable
Dismissing Patent Owner's Motion to Amend as Moot
Denying Patent Owner's Motion to Exclude
Denying in Part and Dismissing as Moot in Part Petitioner's Motion to Exclude

---

[1] The grounds raised in IPR2016-00800 and IPR2016-01609 are consolidated with IPR2016-01610.

[2] The grounds raised in IPR2016-00801 and IPR2016-01611 are consolidated with IPR2016-01612.

SAINDON, *Administrative Patent Judge*, for the Board:

I. INTRODUCTION

We have jurisdiction under 35 U.S.C. § 6. The evidentiary standard is a preponderance of the evidence. *See* 35 U.S.C. § 316(e); 37 C.F.R. § 42.1(d). This Final Written Decision is issued pursuant to 35 U.S.C. § 318(a) and 37 C.F.R. § 42.73.

As was explained in further detail in Paper 13, this proceeding is a consolidation of Petitioner's challenges in three petitions of claims 1, 3, 4, 6–11, 15–22, 25, 26, and 28 of U.S. Patent No. 8,454,186 B2 (Ex. 1001, "the '186 patent").[3] We instituted an *inter partes* review on all challenged claims on all challenged grounds (Paper 38, "Dec. on Inst."). During trial, Patent Owner filed a Response (Paper 59, "PO Resp.") and Petitioner filed a Reply (Paper 100, "Pet. Reply").[4] An oral hearing was held on December 15, 2007 (Paper 183, "Tr.").

Reviewing the arguments and evidence before us, we determine that Petitioner has not established by a preponderance of the evidence that claims 1, 3, 4, 6–11, 15–17, 20–22, and 25 of the '186 patent are unpatentable.

Due to the existence of dispositive issues in this proceeding that also are dispositive of IPR2016-01612, which is a consolidation of IPR2016-

---

[3] As used herein, "Petition I" or "Pet. I" refers to the petition originally filed in IPR2016-00800, now Paper 28. "Petition II" or "Pet. II" refers to the petition originally filed in IPR2016-01609, now Paper 34. "Petition III" or "Pet. III" refers to the petition originally filed in IPR2016-01610, Paper 2.

[4] Both parties also filed confidential versions of their papers (Paper 58, PO Resp. and Paper 99, Pet. Reply). We will cite to the public, redacted version unless otherwise noted.

00801, IPR2016-01611, and IPR2016-01612 addressing U.S. Patent No. 8,454,187 B2 ("the '187 patent"), we enter this Decision in that proceeding as our Final Written Decision, determining that Petitioner has not established by a preponderance of the evidence that claims 1–15 of the '187 patent are unpatentable.[5] *See also* IPR2016-01612, Paper 38 (Decision on Institution, explaining the challenges raised in the consolidated proceeding), IPR2016-01612, Paper 13 (Decision on Joint Motion Regarding Multiple Proceedings, granting the parties' request to consolidate various proceedings). IPR2016-01612 will be discussed in a separate Section IV after our analysis and conclusion for this proceeding.

A. Related Matters

Both parties have filed petitions against the other party's patents. The '186 patent has been asserted against Petitioner in *Willis Elec. Co. v. Polygroup Ltd*., No. 0:15-cv-03443-DWF-SER (D. Minn. filed Aug. 28, 2015). Pet. III 66–69; Paper 4, 2–3. Petitioner previously filed a petition challenging the '186 patent in IPR2014-01263, which was denied. Pet. III 66–69; Paper 4, 2–3. Petitioner filed a second petition challenging the independent claims of the '186 patent in IPR2016-00800, which was granted (Pet. III 5); the challenges raised in that proceeding are now a part of this proceeding, per agreement of the parties. *See* Paper 12 (requesting merger of challenges to '186 patent); Paper 13 (granting request). The present Petition also involves several dependent claims of the '186 patent; Petitioner

[5] All references to "this" proceeding or Decision in this paper, and all citations to papers and exhibits in this paper, are to IPR2016-01610 unless explicitly cited otherwise.

filed IPR2016-01609 challenging other dependent claims of the ’186 patent (Pet. III 6); that proceeding was also consolidated into this proceeding (*see* Paper 36).

Petitioner has filed other petitions challenging Patent Owner’s patents containing similar subject matter and which were also asserted against Petitioner. U.S. Patent No. 8,454,187 is challenged in IPR2016-00801, IPR2016-01611, and IPR2016-01612. Pet. III 66–69; Paper 4, 2–3. U.S. Patent No. 9,044,056 is challenged in IPR2016-00802 and IPR 2016-01613. *Id.* U.S. Patent No. 8,936,379 is challenged in IPR2016-01615, IPR2016-01616, and IPR2016-01617. *Id.* U.S. Patent No. 9,066,617 is challenged in IPR2016-01783. *Id.* U.S. Patent No. 8,974,072 is challenged in IPR2016-01781 and IPR2016-01782. *Id.*

An anonymous party filed an *ex parte* reexamination (90/020,073) against the ’186 patent, and U.S. Patent Application No. 14/512,021 claims priority to the ’186 patent. *Id.*

Petitioner has asserted patents against Patent Owner in *Polygroup Macau Ltd (BVI) v. Willis Electric Co., Ltd.*, No. 3:15-cv-00552 (W.D.N.C.). *Id.* Patent Owner has filed petitions challenging U.S. Patent Nos. 8,863,416, 6,794,825, 9,119,495, and 8,959,810, owned by Petitioner, in IPR2017-00309, IPR2017-00330, IPR2017-00331, IPR2017-00334, and IPR2017-00335.

B. The ’186 Patent

The ’186 patent is directed to a modular artificial tree (e.g., a Christmas tree) with electrical connectors in the trunk. Ex. 1001, (54), (57). An electrical connection runs up the trunk of the tree to provide a source of electricity for light strings draped over the branches. *See id.* at Figs. 2–4.

Physically connecting the trunk sections during assembly of the tree also electrically connects the trunk sections. *Id.* at (57), Fig. 4.

C. Challenged Claims

Petitioner challenges claims 1, 3, 4, 6–11, 15–22, 25, 26, and 28 of the ’186 patent. Independent claim 1 is reproduced below.

Claim 1 is reproduced below.

1. A lighted artificial tree, comprising:

a first tree portion including a first trunk portion, a first plurality of branches joined to the first trunk portion, and a first light string, the first trunk portion defining a first trunk interior and having a first trunk electrical connector and a first trunk wiring assembly, the first trunk wiring assembly electrically connectable to the first light string and the first trunk electrical connector, and wherein at least a portion of the first trunk wiring assembly is located within the first trunk interior;

a second tree portion including a second trunk portion, a second plurality of branches joined to the second trunk portion, and a second light string, the second trunk portion defining a second trunk interior and having a second trunk electrical connector and a second trunk wiring assembly, the second trunk wiring assembly electrically connectable to the second lighting string and the second trunk electrical connector, and wherein at least a portion of the second wiring assembly is located within the second trunk interior; and

wherein the second tree portion is mechanically coupleable to the first tree portion about a central vertical axis, and the second tree portion is electrically connectable to the first tree portion such that a portion of the first trunk electrical connector of the first trunk portion contacts a portion of the second trunk electrical connector of the second trunk portion, thereby creating an electrical connection between the first wiring assembly and the second wiring assembly;

> wherein an end of the second trunk portion is configured to couple with an end of the first trunk portion in at least four different rotational alignments of the first trunk portion relative the second trunk portion about the central vertical axis, and the electrical connection between the first and second tree portions are made independent of the rotational alignments of the first trunk portion relative the second trunk portion about the central vertical axis when the lower end of the second trunk portion is coupled to the upper end of the first trunk portion.

D. Prior Art and Asserted Grounds

Petitioner asserts that claims 1, 3, 4, 6–11, 15–22, 25, 26, and 28 of the ’186 patent are unpatentable under 35 U.S.C. § 103 on the following grounds:

References	**Claim(s) Challenged**	**Petition[6]**
Miller,[7] Otto,[8] and Jumo[9]	1, 10, and 20	I
Miller, Otto, Jumo, and Pan[10]	28	I
Miller, Otto, and Jumo	3, 4, 6, 8, 9, 21, and 25	II
Miller, Otto, Jumo, and Lessner[11]	7 and 22	II

[6] *See supra* n.3, to cross reference petition numbers and paper numbers.

[7] U.S. Patent No. 4,020,201, issued Apr. 26, 1977 (Ex. 1007).

[8] German Utility Model Patent G 84 36 328.2, published Apr. 4, 1985 (translated copy) (Ex. 1008).

[9] French Patent No. 1,215,214, issued Nov. 16, 1959 (translated copy) (Ex. 1009). The inventor is not listed on the face of the patent and instead lists Société Nouvelle des Établissements Jumo.

[10] U.S. Patent No. 6,752,512 B2, issued June 22, 2004 (Ex. 1010).

[11] U.S. Patent No. 3,409,867, issued Nov. 5, 1968 (Ex. 1063).

References	Claim(s) Challenged	Petition[6]
Miller, Otto, Jumo, and Janning[12]	26	II
Miller, Otto, and Jumo	11, 15, and 16	III
Miller, Otto, Jumo, and Yang[13]	17	III
Miller, Otto, Jumo, and Janning	18 and 19	III

Petitioner also relies on the declaration of Mike Wood (Ex. 1006), who testifies he is an expert in electrical engineering as it relates to lighting manufacturing and design (*id.* ¶ 12). *See also* Ex. 1047 (Wood declaration for Petition I); Ex. 1062 (Wood declaration for Petition II).

II. PENDING MOTIONS

A. Patent Owner's Motion to Exclude

Patent Owner moves to exclude Exhibits 1100 (Declaration of Wood), 1101,[14] 1102 (Declaration of Parikh), 1103 (Declaration of Loomis), 1104 (Declaration of Eichmann). We have reviewed Patent Owner's motion (Paper 127), Petitioner's opposition (Paper 138), and Patent Owner's reply (Paper 146). With the exception of Exhibit 1101, which was already expunged, we decline to exclude any of these declarations and instead give the evidence more or less persuasive value depending on the degree to which the testimony is supported by reasoning, fact, and the declarant's expertise.

[12] U.S. Pub. No. 2007/0273296 A9, re-published Nov. 29, 2007 (Ex. 1054) (originally published on Aug. 11, 2005 as U.S. Pub. No. 2005/0174065 A1).

[13] U.S. Patent No. 7,132,139 B2, issued Nov. 7, 2006 (Ex. 1011).

[14] This document was expunged per request of the parties. *See* Paper 154 (joint motion to expunge certain papers), Paper 162 (granting the motion).

B. Petitioner's Motion to Exclude

Petitioner's motion generally seeks to exclude evidence of certain videos (Exs. 2156, 2157, 2164–2166, 2168, 2169, 2172–2181, 2236), certain emails (Exs. 2113, 2114, 2122, 2123, 2138, 2142), certain articles (Exs. 2211–2213), infringement claim charts (Ex. 2247), and the testimony of Patent Owner's expert, Mr. Brown (Ex. 2090), relating to his testimony based on videos. *See generally* Paper 134. Patent Owner opposes (Paper 138), to which Petitioner replies (Paper 147). We review the challenged evidence in view of the arguments in these papers.

1. *Exhibit 2090 – Brown Testimony*

We disagree that we should exclude Mr. Brown's testimony relying on a video and pictures depicting the assembly of Miller- and Otto-style trees. Paper 134, 1–2 (citing Ex. 2236; Ex. 2090, 34–38, 41–43, 79–80, 96). The video and pictures serve as useful demonstratives to illustrate how a person of ordinary skill in the art would understand the disclosures of Miller and Otto. *Motorola, Inc. v. Interdigital Tech. Corp.*, 121 F.3d 1461, 1470 (Fed. Cir. 1997) ("demonstrative exhibit that allowed the experts to summarize and explain the components found in each prior art reference" properly admitted); *Young Dental Mfg. Co. v. Q3 Special Prod., Inc.*, 112 F.3d 1137, 1145–46 (Fed. Cir. 1997) (prior art patent model embodiment properly admitted as demonstrative exhibit); *Brandt v. French*, 638 F.2d 209, 211–212 (10th Cir. 1981) (filmed test admissible as demonstrative exhibit to illustrate characteristics and mechanical principles).

Petitioner does not explain how the video and pictures are inaccurate representations of something a person of ordinary skill in the art would

understand from reviewing the references. *Cf.* Paper 134, 3–4 (alleging an inaccuracy without identifying one). Instead, Petitioner criticizes Patent Owner for not explaining the process by which the trees shown in the video came about (Paper 134, 3). But Dr. Brown explained how the trees in the demonstratives are fair and accurate samples to help illustrate his testimony. Ex. 2090 ¶¶ 47–59. Dr. Brown was subject to cross examination.

Petitioner asserts that Dr. Brown, on cross examination, admitted that the samples in the videos were not representative. Paper 134, 3 (citing Ex. 1105, 53, 55). We disagree with Petitioner's assessment and find, instead, that Dr. Brown's testimony supports his credibility. Dr. Brown is asked whether the sample tree in the video "meet[s] the claims of Miller." Ex. 1105, 53:17–21. First, whether the tree meets the *claims* of Miller is irrelevant. *EWP Corp. v. Reliance Universal Inc.*, 755 F.2d 898, 907 (Fed. Cir. 1985) ("A reference must be considered for everything it *teaches* by way of technology"). Second, Dr. Brown responds that he did not compare the tree samples in the video to the Miller claim, he just relied on the trees in this video for what they showed regarding trunk sections and branches, consistent with his testimony. Ex. 1105, 54:1–11; Ex. 2090 ¶¶ 47–59 (discussing how the connections shown in Miller are made); *see also id.* at 55 (similar discussion of Otto). We conclude that the video and pictures are useful to help illustrate Dr. Brown's testimony regarding Miller and Otto's teachings. *See* FRE 401. We do not find them to be a substitute for the evidence but rather useful demonstratives illustrating how a person of ordinary skill in the art would understand the evidence before us.

Petitioner also asserts that Dr. Brown's testimony relying on the videos is "unfairly prejudicial" but does not explain how that testimony

allegedly prejudices it. We are not aware of anything inaccurate or misleading about the video and pictures. In conclusion, we do not find Exhibit 2090 to be prejudicial or not relevant.

2. *Emails – Exhibits 2113, 2114, 2122, 2123, 2138, and 2142*

We do not rely on these exhibits and dismiss the motion to exclude as moot as to these exhibits.

3. *Videos of Commercials – Exhibits 2156, 2157, 2164–2166, 2168, 2169, 2172–2181*

We do not rely on these exhibits and dismiss the motion to exclude as moot as to these exhibits.

4. *Video of Miller-Style Tree – Exhibit 2236*

Petitioner asserts that Exhibit 2236 is not relevant under FRE 401. Paper 134, 12. We have discussed already above, with respect to the motion to exclude Exhibit 2090, why this video is relevant.

5. *Articles – Exhibits 2211–2213*

We do not rely on these exhibits and dismiss the motion to exclude as moot as to these exhibits.

6. *Claim Charts – Exhibit 2247*

Petitioner asserts that the claim charts in Exhibit 2247 are irrelevant, unfairly prejudicial, and inadmissible hearsay. Paper 134, 13–14. We agree with Patent Owner that these claim charts are relevant to its secondary considerations case, because they tend to show nexus and commercial success. Paper 138, 15. Petitioner argues that the claim charts are unfairly prejudicial because "[they] incorrectly impl[y] wrongdoing on the part of

[Petitioner]." Paper 134, 13. The probative value of Exhibit 2247 for secondary considerations far outweighs any potential prejudice; we do not make findings on infringement. In addition, Exhibit 2247 is not inadmissible hearsay because it is reasonably relied upon by Patent Owner's expert to determine nexus, and is the type of document that an expert in such circumstance would be expected to review. FRE 803.

7. *Conclusion Regarding Petitioner's Motion to Exclude*

Petitioner's motion is denied as to Exhibits 2090, 2236, and 2247. Petitioner's motion is moot as to Exhibits 2113, 2114, 2122, 2123, 2138, 2142, 2156, 2157, 2164–2166, 2168, 2169, 2172–2181, and 2211–2213.

C. Motion for Observation

Patent Owner submitted a Motion for Observations on Cross-Examination of Petitioner's Reply Declarants. Paper 125. Petitioner offers its response. Paper 141. We have reviewed these papers; nothing in these papers require a ruling.

III. PATENTABILITY ANALYSIS

A. Claim Construction

We interpret the claims of an unexpired patent using the broadest reasonable interpretation in light of the specification of the patent. 37 C.F.R. § 42.100(b). Under that standard, a claim term generally is given its ordinary and customary meaning, as would be understood by one of ordinary skill in the art in the context of the entire disclosure. *See In re Translogic Tech., Inc.*, 504 F.3d 1249, 1257 (Fed. Cir. 2007). Although our claim interpretation cannot be divorced from the specification, *see Microsoft Corp.*

v. Proxyconn, Inc., 789 F.3d 1292, 1298 (Fed. Cir. 2015) (quoting *In re NTP, Inc.*, 654 F.3d 1279, 1288 (Fed. Cir. 2011)), we must be careful not to import limitations from the specification that are not part of the claim language, *see SuperGuide Corp. v. DirecTV Enters., Inc.*, 358 F.3d 870, 875 (Fed. Cir. 2004). Any special definition for a claim term must be set forth in the specification with reasonable clarity, deliberateness, and precision. *See In re Paulsen*, 30 F.3d 1475, 1480 (Fed. Cir. 1994).

1. *"Tree Portion"*
(Independent Claims 1, 10, 20)

Patent Owner raised the issue of the construction of "tree portion" in its Response. PO Resp. 47–48. Patent Owner proposes a "tree portion" means "a mechanically and electrically connectable modular and unitary portion of an artificial tree." *Id.* at 47 (citing Ex. 2090 ¶¶ 73–77) (emphasis removed). Petitioner replies that it should mean "a part of a tree." Pet. Reply 21–22 (citing Ex. 1100 ¶¶ 50–51; Ex. 1137, 3).

Claims 1, 10, and 20 specify that a "tree portion" is made of several subcomponents, including a "trunk portion," "branches," and a "light string." Patent Owner's claim construction would cause "tree portion" to serve as defining a structural relationship between those things described in the claim as constituting the tree portion; effectively that the subcomponents to be structurally located and connected in a way so as to make the "tree portion," i.e., their sum, an identifiable assembly that functions as a module, or unitary portion, of the tree. Petitioner's construction would give no patentable weight to the term, other than perhaps its use as a label to refer to the subcomponents as a group. Our reasons follow.

a. Background—Specification

We review the background section of the specification to help us understand the problems, motivations, and common solutions known to a person of ordinary skill in the art. The ’186 patent makes clear that it is directed to a “modular” tree. Ex. 1001, (54), 1:15–18, 2:39–42. A *module* is a component with which a user interacts, generally for assembly.[15] The background section of the ’186 patent helps explain the “modular” concept by way of its discussion of how the user interacts with the tree during assembly in the prior art versus the disclosed invention. The way the user interacts with the tree is driven by the structure of the components. For example, traditional artificial trees required the user to wrap light strings about the tree. Ex. 1001, 1:27–29. The difficulty with this tree structure is that as the number of light strings grows, it becomes more difficult to both string and power the lights. *Id.* at 1:29–32. In response, “pre-lit” trees became available, where the user no longer needed to interact with the tree by separately stringing light strings on branches; the tree came with lights already strung on the tree. *Id.* at 1:33–42. The problem of having to connect and power all of the light strings remained, however—it was difficult to find all of the cords among the branches to plug them together. *Id.* at 1:50–53, 1:54–2:4. In addition, because of the number of branches and lights, the pre-lit sections of the tree were heavy, which made it difficult to align the trunk sections so they connected. *Id.* at 1:44–53, 2:5–35. The claimed solution is

[15] A dictionary definition of “modular” is: “1: of, relating to, or based on a module or a modulus”; “2: planned or constructed on the basis of a standard pattern or standard dimensions: capable of being easily joined to or arranged with other parts or units.” Ex. 1134, 3 (cited in Exhibit 1100 ¶ 25).

to have internal wiring for the lights, wherein the trunk sections provide an electrical-mechanical connection. In this way, the user interacts with the claimed tree by connecting tree portions, without having to arrange light strings, make electrical connections, or adjust branches. *See, e.g.*, *id.* at 14:20–24, 15:31–34, 15:50–59[16]; *see SciMed Life Sys. v. Advanced Cardiovascular*, 242 F.3d 1337, 1342–46 (Fed. Cir. 2001) (it is appropriate to rely on the specification's discussion distinguishing the present invention over the prior art). In sum, the specification explains that the structure of the tree dictates how a user interacts with the tree, and that to improve the tree, the structure must affect how a user interacts with the tree.

b. Background—Prior Art

Even though Patent Owner appears to have coined the term "modular" in its application to artificial trees, the concept of the "module" being the component with which the user interacts during assembly and disassembly would be familiar to a person of ordinary skill in the art, as supported by the extrinsic evidence. *See Standard Oil Co. v. Am. Cyanamid Co.*, 774 F.2d 448, 454 (Fed. Cir. 1985) (holding that a person of ordinary skill in the art "is presumed to be aware of all the pertinent prior art"); Ex. 2090 ¶ 78 (Patent Owner's expert testifying that a person of ordinary skill would understand "modular" in the '186 patent to reference a particular arrangement). The evidence shows that a key motivator in the artificial tree art is the ease of assembly, disassembly, and storage. *See, e.g.*, Ex. 1001, 1:22–2:35 (discussion of difficulties in assembling prior art trees); Ex. 1027

[16] And, given that the lights are on the branches, it is implicit that the user does not have to separately attach branches either.

¶¶ 4–11 (discussing ease of assembly and disassembly of prior art); Ex. 1007, 1:48–56 (discussing how "trunk members having [electrical connections therein] so that . . . the limbs and lighting bulbs are easily assembled thereon"); Ex. 1028, 1:22–24 (directed to "an improved artificial tree apparatus that is easily assembled and disassembled"), 4:9–19 (the described invention "makes assembly and disassembly much easier for the user"). These references explain how their trees are better for assembly, disassembly, and storage based on certain arrangements of the trunk, branches, and lights, and how they are combined by the user to make a tree. *See, e.g.*, Ex. 1023, 1:24–2:16 (discussing how a configuration where branches are attached to the trunk so that they can be "folded for storage" has drawbacks), 3:64–67 ("it is preferred that [trunk] be sectional . . . for storage purposes); Ex. 1027, ¶ 8 (stating that the prior art trees "generally require a significant amount of space for storage when not in use and/or can be very cumbersome and difficult to assemble and dis-assemble"). All artificial trees are made of trunks, branches, and lights—as the prior art shows, it is critical to understand how the same few components (trunks, branches, lights, etc.) are arranged together greatly affects how a user interacts with them, and that how a user interacts with these components to assemble them is a major driving motivator behind the designs in the art.

With this background in mind, we turn to what the '186 patent specification describes as its module—the tree portion.

c. Specification

The '186 patent explains that the module of its modular tree is called a "tree portion," and that that tree is made by connecting the various tree portion modules to assemble the tree. Ex. 1001, 2:29–42 (describing tree

assembled by tree portion modules), 2:42–44 (describing the makeup of a tree portion module), 2:48–50 (same, for another tree portion), 6:19–25 (describing tree assembled by tree portion modules), 6:45–47 (describing makeup of tree portion), 7:41–44 (same), 14:20–24 (describing how to assemble tree using tree portion modules), 15:50–59 (same). As reflected in the claims and the specification, the "tree portion" is made of several components—trunk, branches, lights, connectors, wires, etc.

What defines "tree portion" over other collections of trunk, branches, lights, etc., is that the claimed "tree portion" is a module, a distinct unit with which a user interacts. *See, e.g.*, *id.* at 14:20–24, 15:50–59. That group of components—trunk, branches, lights, etc.—are arranged and interconnected to allow the user to use them as modules when assembling the tree, by connecting one module to another. Structurally, that means that connecting one tree portion to another connects them mechanically and electrically because the tree portion module is designed such that the electrical and mechanical connectors are in certain locations and have certain structures to provide that modularity. *See, e.g.*, *id.*, Fig. 4 (noting how connector 200 in trunk portion 120 will fit with connector 212 in trunk portion 160), 9:31–45 (explaining the connection in Fig. 4), Fig. 15b (showing connection of the trunks and connectors between two tree portions), 16:14–24 (explaining the connection in Fig. 15b). Similarly, the '186 patent provides one example of how branches are structurally part of a tree portion module. The branches are connected to the trunk in a series of branch support rings 127 by placing a pin through the hole of the support ring, which captures a loop at the end of the branch. *Id.* at 6:48–56, 7:1–5; *see also id.* at Fig. 2 (depicting the support rings with most branches removed for clarity), Fig. 15b (depicting a

close-in view of the branch support rings, with branches removed for clarity). As explained in the specification, the benefit of this connection is that the branch can pivot about the pin, "allowing tree portion 104 to collapse to a smaller envelope size for convenient storage." *Id.* at 7:5–8. This means that the user does not take branches on or off—the branches are part of the module and this pivotable structure provides modularity by making it easy for the user to interact with the tree portion as a modular unit. We do not limit the claims to this embodiment, but rather use it as a teaching example of the type of connection between branches and trunk that provides a modular tree portion.

As is clear from these passages, as well as the background knowledge of other artificial trees, the artificial tree's structure is greatly influenced by the way the designer intends the user to interact with it during assembly. The structures that the user is intended to interact with are modules, and the '186 patent claims this structure via the "tree portion" limitation. Although the form of the structure is not claimed particularly, that does not mean that we can ignore that "tree portion" sets forth a structural requirement of the way the trunk, branches, and lights are arranged and connected. *Lindemann Maschinenfabrik GMBH v. Am. Hoist & Derrick Co.*, 730 F.2d 1452, 1459 (Fed. Cir. 1984) (holding, in an anticipation context, that we may not "disregard . . . the part-to-part relationships set forth in the claims and that give the claims their meaning").[17] We have reviewed Petitioner's arguments to the contrary, but they are not persuasive, for the reasons below.

[17] The idea here is akin to how a breadboard with electronic components is different from an integrated circuit—the names of the subcomponents may be the same, and they may be located in the same relative positions and

d. Petitioner's Arguments for "Tree Portion"

Petitioner and its expert do not provide a persuasive analysis of how the claims should be read in light of the above disclosures in the specification. *See* Ex. 1100 ¶¶ 50–53 (discussing "tree portion"); *see also id.* ¶¶ 18–30 (discussing the term "modular"). Instead, Petitioner focuses on alleged deficiencies of Patent Owner's construction.

Petitioner's expert argues that Patent Owner's construction implies a temporal limitation of when the lights are attached to the branches. Ex. 1100 ¶ 52. This argument is not persuasive once one duly considers the specification and understands that "tree portion" is more than merely a label for the collection of parts. If "tree portion" is considered as a modular or unitary structure, e.g., the collection of a given trunk section and its branches and lights connected in a way such that they are a unitary portion of a tree, then there is no temporal aspect.[18] The temporal argument only comes into play if one ignores what "tree portion" is telling a person of ordinary skill in the art about the claims. If one ignores what "tree portion" means, then that person could be unsure about when a tree portion is created, because that person has taken the term out of the claim and reduced it to merely any collection of trunk, branches, and lights. However, the correct interpretation of the claims in light of the specification resolves that ambiguity because it requires the subcomponents to have a structure and have an arrangement in

---

effectively perform the same functions, but there is an understanding of how those subcomponents are connected in an *integrated* circuit that results in a difference in practice over an equivalent breadboard circuit.

[18] We need not determine here a prospective, precise boundary between what constitutes a "tree portion"; Patent Owner's proposed definition is sufficient for purposes of resolving the issues in this case.

some way to make them a module or unit serving as a "tree portion"—whether assembled or not, those components are the module or unit that serves as a tree portion.

Petitioner's expert also argues that "there are many instances where the '186 Patent and its progeny recite tree portions that do not include those supposedly 'required' parts." *Id.* ¶ 53. But Petitioner's expert does not cite here to where these "many instances" are, or explain why this is relevant. The specification makes clear what a "tree portion" is, as we have explained above. To the extent some claims focus on other sub-components of the tree portion, and define further limitations of those sub-components, that does not mean that we can ignore what a "tree portion" is. *See Kraft Foods, Inc. v. Int'l Trading Co.*, 203 F.3d 1362, 1368 (Fed. Cir. 2000) ("[t]hat the patentee chose several words in drafting a particular limitation of one claim, but fewer (though similar) words in drafting the corresponding limitation in another, does not mandate different interpretations of the two limitations").[19]

---

[19] As to the requirement in the claims for the branches to be "joined to the first trunk portion," we understand a plain and ordinary meaning of "joined" is used here. *See, e.g.*, Ex. 1001, 1:25–27, 5:47–59 (describing the various components "joined" together—i.e., connected—in a plain and ordinary fashion and nothing more); *cf.* PO Resp. 49–53 (arguing that "joined" requires some form of permanency). Notably, however, the joining is subject to the joint permitting the claimed tree portion to be a unitary or modular structure, rather than merely a collection of trunk, branches, and lights. It is this language to the tree portion that must be read in light of the specification to fully understand its meaning. To the extent the dissent suggests we render "joined" meaningless, we disagree—we would require a joint to be found in the prior art. However, there is the caveat that it still must be a joint in a "tree portion," and joints that preclude the claimed tree portion are excluded via the tree portion limitation. The same analysis applies for "attached" in claim 28.

Petitioner's expert also argues that the '186 patent uses the term "modular" in many different ways. Ex. 1100 ¶¶ 25–30. This is a strawman argument in the context of "tree portion." The claims require a "tree portion," which in light of the specification is a set of sub-components arranged in a certain way to make them a module. But that does not mean that one module could not consist of other sub-modules, so long as the larger group of components remains a tree portion. Instead, when reading the claims in light of the specification, the claimed tree portion is the module (the portion that is unitary), and it provides mechanical and electrical connections between trunk portions of other modules (or the base). *See* Ex. 1001, 2:5–35 (describing the deficiencies of the pre-lit prior art in terms of how the prior art versions of tree sections connected together). Thus, Petitioner's pointing to certain subcomponents themselves further being modular, e.g., modular lights, Ex. 1001, 18:46–59, has no effect on this analysis. The claimed tree portion module has lights.

Petitioner's expert also argues that Patent Owner could have argued "modular" as it does now during prosecution but did not. Ex. 1100 ¶¶ 29–30. We are not persuaded that the applicant's actions there can be relied upon to support Petitioner's position. Petitioner's expert cites to Exhibit 1002, page 201, for the proposition that "the Examiner noted that a 'modular lighted artificial tree' was taught." Ex. 1100 ¶ 30. We do not find such a discussion at the cited portion of the prosecution history. However, performing a word search we can locate the Examiner finding that Smith (Ex. 1021) teaches a modular lighted artificial tree. Ex. 1002, 128. However, it is not clear what Petitioner would have us make of this. Smith's tree plausibly appears to have modular units because the lights, branches,

and trunks connect together as units of lights, branches, and trunks. *See* Ex. 1021, Fig. 1, 1:4–6. The subsequent amendment appears directed to limitations specifying rotational alignments or other features, apart from the tree portion or modular limitations. *See* Ex. 1002, 157. This line of argument is not persuasive

Petitioner's expert similarly argues that the Examiner rejected similar claims over Hicks (Ex. 1027) regarding the related '379 patent. Ex. 1100 ¶ 30. There, applicant noted he "respectfully traverses these rejections, but in an effort to advance prosecution of the present application, Applicant has amended the claims to further differentiate the claimed invention from the cited references," again adding in rotational alignment features. Ex. 1146, 318. We do not find anything here in the prosecution history of this patent that is persuasive of Petitioner's proposed construction.

e. Conclusion Regarding "Tree Portion"

Accordingly, reading the claims in light of the specification, we determine that the broadest reasonable interpretation in light of the specification of "tree portion" is not merely a label for subcomponents but rather a limitation that implies that the subcomponents are structured, arranged, and connectable in a way that they are interfaced with as a unit, i.e., "hav[e] separable, modular tree portions mechanically and electrically connectable between trunk portions." We adopt Patent Owner's proposed construction.[20]

---

[20] In addition, for a visual example of how Patent Owner proposes to read "tree portion," and how that arrangement lends itself to improvements in usability, see Ex. 2238, a video showing assembly of a commercial embodiment. The assembly of that tree can be contrasted with a tree having an independent trunk, branches, and light configuration in Exs. 2236 and

2. *"Modular Lighted Artificial Tree" (Independent Claim 28)*

The preamble of independent claim 28 recites a "modular lighted artificial tree."[21] Neither party construes this phrase, although Patent Owner proposes a construction for "lighted artificial tree" (PO Resp. 55–56), to which Petitioner offers a counter-proposal (Pet. Reply 13–20). Both parties do propose constructions for "modular artificial tree" in related proceedings. IPR2016-01615, Paper 32, 14–15 (Patent Owner arguing a "modular artificial tree" means "a tree constructed of modular portions, each modular portion being a separate tree section."); IPR2016-01615, Paper 47, 7–9 (Petitioner arguing "modular artificial tree" is part of a non-limiting preamble or, alternatively, means "an artificial tree with elements capable of being easily joined or arranged with other parts or units.").

We construe "modular lighted artificial tree" here as "a tree constructed of modular portions, each modular portion being a separate tree section." We determine that the preamble in claim 28 gives life and meaning to the claim for similar reasons as explained in our analysis found in our Final Written Decision in IPR2016-01615, where we construe the similar limitation, "modular artificial tree," in view of a similar specification. *See Omega Eng'g, Inc. v. Raytek Corp.*, 334 F.3d 1314, 1334 (Fed. Cir. 2003) ("[W]e presume, unless otherwise compelled, that the same claim term in the same patent or related patents carries the same construed meaning."). Namely, the fact that an artificial tree is "modular" tells a

---

2237, which are videos showing assembly of a tree like in Miller.

[21] Claim 28 does not have the "tree portion" limitation discussed above.

person of ordinary skill in the art something about the structure of the tree—the tree has "separable, modular tree portions mechanically and electrically connectable between trunk portions." Ex. 1001, 1:15–18; *see also id.* at 2:39–44; 6:20–28. Thus, the preamble does more than merely state the intended use or purpose of the claimed invention. *Cf. Pitney Bowes, Inc. v. Hewlett–Packard Co.*, 182 F.3d 1298, 1305 (Fed. Cir. 1999) (explaining that if "the body of the claim fully and intrinsically sets forth the complete invention, including all of its limitations, and the preamble offers no distinct definition of any of the claimed invention's limitations, but rather merely states, for example, the purpose or intended use of the invention, then the preamble is of no significance to claim construction because it cannot be said to constitute or explain a claim limitation").

In context with the rest of the claim and specification, reciting that the tree is "modular" means that the tree has the multiple tree portion construction described in the specification. The body of claim 28 is not structurally complete because the term "modular" in the preamble further defines and limits the structure in the body of the claim to have modules forming a tree—the trunk, branch, and light connections must be arranged in a particular way for that to be possible. *See Rowe v. Dror*, 112 F.3d 473, 478–479 (finding a preamble directed to "angioplasty" provides a structural limitation on the otherwise complete body of the claim directed to a balloon); *Catalina Mktg. Int'l, Inc. v. Coolsavings.com, Inc.*, 289 F.3d 801, 808–809 (Fed. Cir. 2002) (listing various "guideposts" to review when considering if a preamble is limiting). Likewise, the preamble is more than a description of the structure recited in the body and is not an intended use or purpose. Reading claim 28 in view of the preamble, it is clear, for example,

that the limitation requiring "the second trunk portion is mechanically and electrically connectable to the first trunk portion by coupling . . . thereby causing the trunk[s] . . . to make an electrical connection" means that the modules in this tree are the various trunk portions and their associated structures (e.g., connectors, branches, lights), similar to the tree portions of claims 1, 10, and 20. Thus, the claim 28 defines the level of modularity at the trunk-branch-light level, as in claims 1, 10, and 20. In conclusion, we construe "modular lighted artificial tree" to mean "a tree constructed of modular portions, each modular portion being a separate tree section."

3. *Other Claim Terms*

No remaining terms require construction for purposes of this decision. *Vivid Techs., Inc. v. Am. Sci. & Eng'g, Inc.*, 200 F.3d 795, 803 (Fed. Cir. 1999) (only those terms that are in controversy need to be construed, and only to the extent necessary to resolve the controversy).

B. Person of ordinary skill in the art

Petitioner proposes that a person of ordinary skill in the art had:

> (1) a degree in electrical engineering or an equivalent degree; (2) a minimum of one or two years of experience in electrical engineering or electronics, specifically lighting manufacturing and/or design; and (3) general knowledge of engineering that would include understanding of lighting design, construction, functions, attributes and processes used to implement such products.

Pet. III 21 (citing Ex. 1006 ¶¶ 17–22); *accord* Pet. II 18–19 (citing Ex. 1062 ¶¶ 17–22); Pet. I 12 (citing Ex. 1047 ¶¶ 17–22).

Patent Owner offers the following description:

> (1) a person with at least a bachelor's degree in mechanical engineering or electrical engineering and at least one to two years

> of experience in the development of mechanical and electrical products, or (2) a person with at least one to two years of experience working in product development, design, or manufacturing of lighted artificial trees.

PO Resp. 44 (citing Exs. 2091 ¶ 81; 2092 ¶ 7; 2090 ¶ 69).

We also consider the level of skill implied by the disclosures of the prior art references. *Okajima v. Bourdeau*, 261 F.3d. 1350, 1355 (Fed. Cir. 2001) (the prior art itself can reflect the appropriate level of skill in the art).

Reviewing the parties' proposed definitions, we find Petitioner's to be the more appropriate, with one caveat discussed later. Petitioner's proposed level of skill would allow that person to understand the prior art in this proceeding and make and/or use it. On the other hand, Patent Owner's proposed level of skill is too low, and includes persons not involved in the design or creation of the product, such as a person tangentially involved with the product in the manufacturing phase; people who would not know how to make and/or use the relevant art. We agree with Petitioner, arguing in its Reply, that a person of ordinary skill in the art requires the technical skills and knowledge to be able to understand, e.g., the electrical connections involved in the artificial trees. Pet. Reply 4–7. As to Patent Owner's argument that Petitioner's requirement that a person of ordinary skill has an engineering degree and two year's practical experience is unduly high (PO Resp. 45), we note that the person of ordinary skill is a hypothetical person, and that less education can be offset by more experience—in other words, we do not interpret Petitioner's list as having a strict requirement for an engineering degree, but rather to set forth the idea that a person of ordinary skill in the art is typified by someone with the knowledge had by a person with an engineering degree.

We do not outright adopt Petitioner's proposed definition, however, because it is broadly directed to "lighting design." Although we are persuaded that a person of ordinary skill in the art would have broader knowledge outside of lighted artificial trees, we are not persuaded that a person who spends her time on any given form of "lighting design," e.g. stadium lighting, has ordinary skill in the claimed subject matter dealing with artificial trees. Granted, with her knowledge and skills, she would likely readily become such a person with exposure, but she would need some time to become familiar with the particularities of the design of lighted artificial trees. *See, e.g.*, Pet. Reply 3 (highlighting a need for consideration of safety standards for consumer products); Ex. 1100 ¶ 12 (same). Accordingly, we adopt Petitioner's level of skill with the modification that the person of ordinary skill in the art have: "(2) a minimum of one or two years of experience in electrical engineering or electronics, specifically ~~lighting~~ lighted artificial tree manufacturing and/or design." This reflects the reality that a person of ordinary skill in the art would at least have exposure to working with lighted artificial trees at a technical level.

C. Independent Claims 1, 10, 20, and 28 (Miller, Otto, and Jumo; Miller, Otto, Jumo, and Pan)

1. *Petitioner's Ground*

Claims 1, 10, 20, and 28 each include limitations typical to an artificial tree, e.g., trunks, lights, and branches. They each also include limitations directed to wiring provided inside the trunk, wherein the electrical connection is made when mechanically connecting the trunk portions. Claims 1 and 20 each specify a minimum number of permitted

alignments (four and a plurality, respectively). Claim 28 provides additional detail on the light string configuration.

Petitioner asserts that the subject matter of claims 1, 10, 20, and 28 would have been obvious to a person of ordinary skill in the art. Pet. I 18–57. At a high level, Petitioner asserts that Miller describes most of the elements of claims 1, 10, 20, and 28, with the possible exception of the recited connection between the tree trunk elements. *See, e.g.*, *id.* at 19–20. Petitioner's excerpted, annotated version of Figure 2 of Miller, reproduced below, shows Miller's connection:

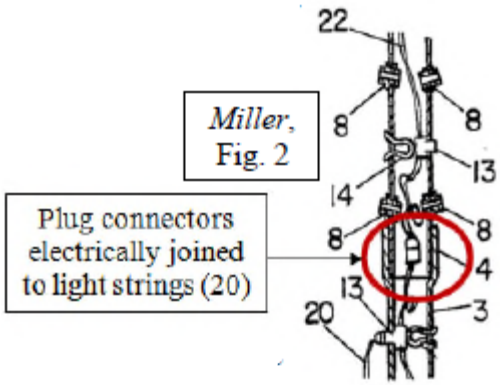

Petitioner's excerpted, annotated version of Figure 2 of Miller shows a cross section of an artificial tree and, inside it, what appears to be a standard plug connection between two electrical cords.

Petitioner asserts that Otto, also describing an artificial tree, explains the benefit of having trunk sections connected both electrically and mechanically at the same time (rather than in sequence as apparently would be done in Miller). Pet. I 20–21 (citing Ex. 1008, 18:6–29[22], Ex. 1006 ¶¶ 121–25, 138–55). Otto's Figure 2 is reproduced below:

[22] Petitioner's citations to Otto are to the page numbers stamped on the Exhibit and to the line numbers shown thereon. We follow this convention. We note that the line numbers do not line up very well and that our citations

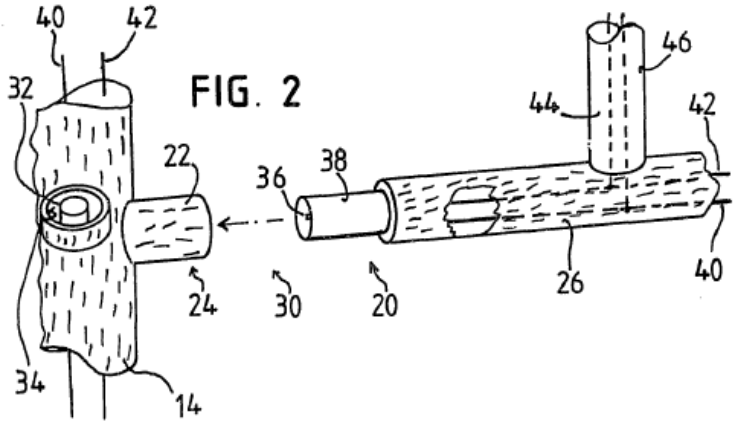

Figure 2 of Otto is a perspective view of a branch having a plug being connected into a socket on a trunk portion. Otto describes how trunk and branch components electrically and mechanically connect using coaxial connections, which makes it "easy to put the connecting areas together, and the branches and trunk elements may be rotated relative to one another even in the assembled state, so that any desired configuration of the Christmas tree is achieved." Ex. 1008, 18:23–27. However, other than explaining that Otto teaches that trunks are connected in a way that permits rotational alignment, Petitioner does not rely on Otto for the structure of these connections. *See, e.g.*, Pet. I 29–30 (addressing connectors in the first trunk of claim 10 and citing to Jumo).

Petitioner also asserts that a person of ordinary skill in the art would have been aware of a connector as shown in Jumo, which is directed to configurable coaxial power connections between tube-like arm segments,

---

are to the approximately closest line number drawn on the left and not based on counting actual line numbers.

e.g., as in a desk lamp. *See* Pet. I 21–24; Ex. 1009, Fig. 4. Figure 4 is reproduced below:

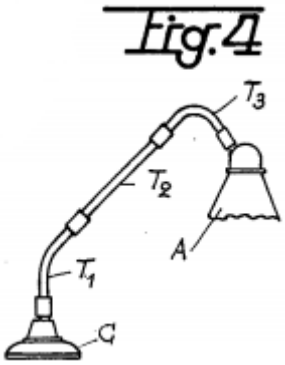

Figure 4 of Jumo depicts an example use of the connectors in a desk lamp.

An excerpt of Figure 1 of Jumo is reproduced below, showing additional details of the connectors inside the tubes:

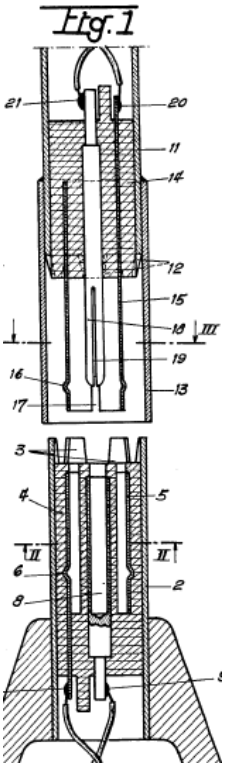

Figure 1 of Jumo depicts a cross section view of a coaxial tube connector.

Jumo explains that connections made between flexible or metal wiring components in jointed support arms can become strain-hardened or damaged, and proposes a particular set of coaxial power connections that also have slots to fix rotational movement between the connected portions. Ex. 1009, 4:1–11, 27–29.[23] Jumo discloses that these connectors can be straight or curved, "and [are connected] up to a user device that can be of absolutely any type whatsoever." *Id.* at 5:19–20.

Petitioner asserts that it would have been obvious to a person of ordinary skill in the art to replace the conventional plug-and-socket electrical connectors of Miller with the coaxial connectors of Jumo, for the reasons suggested in Otto and Jumo. Pet. I 24–26. According to Petitioner, Otto describes why it would have been obvious to have a simultaneous electrical-mechanical connection in artificial Christmas trees, to allow multiple rotational connections and for the ease of making the electrical-mechanical connection at the same time. *Id.* at 24–25 (citing Ex. 1008, 18:6–29; Ex. 1006 ¶¶ 121–125). Petitioner also asserts that Jumo describes why a person of ordinary skill in the art would choose the particular coaxial power connections in Jumo, to avoid the drawbacks of flexible wiring and rubbing contacts. *Id.* at 25 (citing Ex. 1009, 4:8–9; Ex. 1006 ¶¶ 126–132, 138–155). Petitioner characterizes the combination as "a substitution of one known element for another to obtain predictable results and a combination of prior art elements according to known methods to yield predictable results." *Id.* at 25–26.

[23] Citations to pages in Jumo are to the page numbers stamped in the lower right hand corner.

2. *Patent Owner's Contentions*

The following is an overview of the main points of contention raised by Patent Owner. Patent Owner argues that Miller does not disclose a "tree portion" as recited in independent claims 1, 10, and 20 as properly construed because the branches and lights in Miller are in the same module with the trunk portion. PO Resp. 81–82. Patent Owner argues the rationale for combining the teachings of the references and that incorporating the teachings of Jumo as proposed "fails to appreciate the aspects of the *Miller* design and assembly process." *Id.* at 60. Specifically, Patent Owner points out that the Miller tree design makes it easy to assemble the trunk sections because there are no branches attached to it during assembly; the branches come later. *Id.* at 60–63. Thus, Patent Owner reasons, there is no difficulty in assembly and no reason to look to Jumo. *Id.* at 63. Patent Owner similarly argues that Jumo is not analogous art. *Id.* at 67–77. Lastly, Patent Owner sets forth its arguments regarding objective indicia of non-obviousness. *Id.* at 87–139.

3. *Petitioner's Reply*

Petitioner replies to the above contentions in its Reply. Regarding analogous art, Petitioner argues that Jumo's "electrical connectors . . . are structurally and functionally similar to those in the '186 patent." Pet. Reply 32–33. Petitioner also argues that Jumo would be reasonably pertinent to the problem regarding "convenient assembly, disassembly, and electrically connecting sections of an artificially lit object." *Id.* at 35.

In reply to Patent Owner's arguments regarding rationale, Petitioner reiterates its prior positions, that Jumo's "particular coaxial power

connectors . . . avoid the drawbacks of flexible wiring and rubbing contacts." *Id.* at 37; *see also* Pet. I, 24–27; Pet. II, 29–34; Pet. III, 23–36. Lastly, Petitioner replies to Patent Owner's arguments regarding objective indicia of non-obviousness. Pet. Reply 48–73.

4. *Patent Owner's Sur-Reply / Petitioner's Sur-Sur-Reply / Further Briefing*

We authorized Patent Owner to file a Sur-Reply responding to issues on the topic of objective indicia, and Petitioner to file a Sur-Sur-Reply. Paper 111 (Paper 131, "PO Sur-Reply"; Paper 145, "Pet. Sur-Sur-Reply"). We additionally permitted both parties to file further briefs discussing supplemental declarations by the experts, on the topic of the particular statistical methods utilized in the objective indicia analysis for commercial success. Paper 156 (Petitioner's Brief Regarding the Supplemental Declaration of Richard J. Eichmann); Paper 159 (Patent Owner's Brief Regarding the Supplemental Declaration of Carl G. Degan).

5. *Motion To Amend*

Patent Owner filed a Motion to Amend. Due to the later issuance of the Federal Circuit's *Aqua Products* decision,[24] we permitted, at their joint request, the parties to re-do the Motion to Amend and associated briefing in light of that guidance. Paper 149 (Patent Owner's Motion to Amend); Paper 157 (Petitioner's Opposition to Patent Owner's Motion to Amend); Paper 170 (Patent Owner's Reply in Support of Motion to Amend); *see also* Paper

[24] *Aqua Products Inc. v. Matal*, 872 F.3d 1290 (Fed. Cir. 2017) (holding that the Patent Owner cannot be given the burden of showing patentability in a motion to amend).

137 (Order permitting new briefing and a new motion to amend); Paper 162 (Order expunging prior motion to amend documents).

6. *Discussion Regarding "Tree Portion"*

This discussion affects independent claims 1, 10, and 20, and claims 3, 4, 6–9, 11, 15–21, 22, 25, and 26, which depend therefrom. As we have construed "tree portion," Petitioner has not provided sufficient evidence that the proposed combination of Miller, Otto, and Jumo satisfy this claim limitation, because Petitioner has not addressed how the trunk and branches have a modular or unitary relationship within a given purported tree section. Instead, we credit the testimony of Patent Owner's expert, Mr. Brown, that the branches in Miller are separate from the trunk and not a part of a module or unit consisting of trunk, branches, and lights as required by these claims. Ex. 1007, Fig. 2 (noting the branches fit in the apertures 7), 2:3–8; Ex. 2090 ¶¶ 46–50, 52, 115. The claims require the "standard pattern," or module, is the trunk-branch-light unit, whereas in Miller, the branches are not part of the same "standard pattern" with the trunk, but rather are independent. Ex. 1007, Fig. 2; Ex. 1134, 3. The same goes for the lights, which we find likewise are not as a unit with the trunk, because they hang on branches that are separately assembled and, thus, they are independent of the trunk sections of Miller-Otto-Jumo. Ex. 1007, Fig. 2; Ex. 2090 ¶¶ 52–54.[25]

---

[25] The dissent would read the claims on any set of trunk-branches-lights, however arranged, criticizing the claims for not setting out with more specificity the "structure" that gives rise to Patent Owner's understanding of "tree portion." We find no such explicit structural recitation is required, as a person of ordinary skill in the art would understand that structure was required to give rise to a "tree portion" module. In some ways, the "tree portion" limitation is similar to a functional limitation, where the claimed

Because claims 1, 10, and 20 each require the level of modularity to be the combination of trunk (with electrical connectors), branches, *and* lights, the Miller-Otto-Jumo combination does not recite a "tree portion" as claimed.[26]

Petitioner does not point to a teaching in another reference to cure this deficiency. Accordingly, we find that Petitioner has not established, by a preponderance of the evidence that claims 1, 10, and 20 are unpatentable.

7. *Discussion Regarding "Modular Lighted Artificial Tree"*

This discussion affects independent claim 28, which has the term "modular lighted artificial tree" in its preamble. As we determined above, the preamble breathes life and meaning to the body of the claim, telling a person of ordinary skill in the art that the particular tree configuration is a modular tree. Specifically, the claim requires "a tree constructed of modular portions, each modular portion being a separate tree section." We found above that the Miller-Otto-Jumo combination does not teach tree portions arranged as a unit, as required by independent claims 1, 10, and 20. Claim

---

function dictates the structure required without being specific as to what structure. *See, e.g.*, *K-2 Corp. v. Salomon S.A.*, 191 F.3d 1356, 1363 (Fed. Cir. 1999) ("the functional language tells us something about the structural requirements of the attachment between the bootie and the base [of an inline skate]"); *Textron Innovations, Inc. v. Am. Eurocopter Corp.*, 498 F. App'x. 23, 28 (Fed. Cir. 2012) (non-precedential) ("In cases in which functional language adds a structural limitation to an apparatus claim . . . it does so because the language describes something about the structure of the apparatus rather than merely listing its intended or preferred uses.").

[26] In response to the dissent's assertion that we could rely only on Miller alone, we note that even under the dissent's claim constructions Miller alone does not disclose the electrical-mechanical connectors more specifically described in independent claims 10, 20, and 28. *See also* infra n.31 (further explaining why Petitioner does not present a Miller-alone ground)

28, through its "modular" limitation, and its description of how the modules electrically *and* mechanically connect at the same time,[27] likewise requires modular units of a trunk, branches, and lights that connect when the trunks are connected, as we discussed in our claim construction section. Consequently, the Miller-Otto-Jumo combination does not satisfy each limitation of independent claim 28 for similar reasons. We find that Petitioner has not established, by a preponderance of the evidence that claim 28 is unpatentable.

8. *Discussion Regarding Analogous Art & Rationale*

This discussion affects all claims in this proceeding.[28] The issue here is whether a person of ordinary skill in the art would have considered modifying the tubular trunk sections containing electrical connectors of Miller, as modified by the teachings of Otto, to include features from the electrical-mechanical connection mechanism found in Jumo. For the reasons explained below, we find that Jumo is not in the field of endeavor and that Petitioner has not established that Jumo would have commended itself to an inventor's attention when considering the problems involved with artificial trees. In that same vein, we find that Petitioner has not established a reason with rational underpinnings explaining why a person of ordinary skill in the art would have modified Miller's trunk to have connectors as taught in Jumo. Our reasons follow.

---

[27] *See supra* n.**Error! Bookmark not defined.**.

[28] This discussion represents further reasons why the claims have not been shown to be unpatentable.

a. Field of Endeavor

Petitioner first proposes the field of endeavor through its discussion of the level of ordinary skill in the art, and argues that the field of endeavor is "lighting," which Petitioner later refines to "decorative lighting" in its Reply. Pet. I 12; Pet. Reply 3 ("the relevant field of endeavor is decorative lighting products"); *see In re Ethicon, Inc.*, 844 F.3d 1344, 1349–50 (Fed Cir. 2017) (the first test for analogous art is whether the art is from the same field of endeavor, regardless of the problem addressed). Patent Owner proposes the field of endeavor as "mechanically and electrically connectable modular pre-lit artificial trees." PO Resp. 68. We find Patent Owner's proposed field is an attempt to limit the field of endeavor to nearly exactly the claimed invention; this is too narrow. The specification supports a broader interpretation when it discusses the relevant prior art as including pre-lit trees and traditionally lit trees. Ex. 1001, 1:22–2:35. In addition, the '186 patent states "[t]he present invention is generally directed to artificial trees with decorative lighting." *Id.* at 1:14–15.

Petitioner's proposed level of skill goes well beyond the field of the '186 patent, from trees with decorative lighting to simply decorative lighting. Aside from statements asserting it is so, we are not presented with persuasive evidence or explanation that supports a finding that the field of endeavor extends to all decorative lighting. *See* Pet. Reply 3 (stating "the relevant field of endeavor is decorative lighting products," citing Ex. 1100 ¶ 11); Ex. 1100 ¶ 11 (stating "[t]he relevant field of endeavor for determining the level of skill for a POSA is decorative lighting products," but providing no explanation or evidence in support); 37 C.F.R. § 42.65(a)

("Expert testimony that does not disclose the underlying facts or data on which the opinion is based is entitled to little or no weight.").

Based on the evidence before us, we find that the field of endeavor is "artificial trees with decorative lighting," a middle ground between the two parties' proposals, yet supported by the evidence of record. Ex. 1001, 1:14–15. Regardless of which is correct, however, Jumo is not in any of the above-stated fields of endeavor. Jumo is directed to a "latching side-by-side support arm for electrical device," e.g., electrical connectors for a lamp. Ex. 1009, title, 4:35–36. We do not find credible evidence or reasoned explanation that Jumo is directed to *decorative* lighting (and it is clearly not directed to artificial trees). Accordingly, we do not find Jumo directed to the field of endeavor of the '186 patent.

b. Reasonably Pertinent

We next turn to whether Jumo is reasonably pertinent to a problem faced by the inventor in the art. *Ethicon*, 844 F.3d at 1349–50 (the second test for analogous art is whether "the reference is still reasonably pertinent to the particular problem with which the inventor is involved"). We must also keep in mind that "familiar items may have obvious uses beyond their primary purposes." *KSR Int'l Co. v. Teleflex, Inc.*, 550 US 398, 420 (2007). Petitioner asserts that Jumo "generally addresses problems with convenient assembly, disassembly, and electrically connecting sections of an artificially lit object, and a POSA would have found *Jumo* reasonably pertinent to addressing the same problems." Pet. Reply 35 (citing Ex. 1100 ¶¶ 78–79). We agree that a problem faced by the inventor in this art is convenient assembly and disassembly, but as it relates to artificial trees. *See, e.g.*, Ex. 1001, 1:33–34 (easing burden with "pre-lit" trees), 1:47–50 (difficult to lift

and align trunks), 1:54–56 (difficult to find and connect electrical connections); *see also In re Oetiker*, 977 F.2d 1443, 1447 (Fed. Cir. 1992) (stating that "it is necessary to consider 'the reality of the circumstances' . . . - in other words, common sense — in deciding in which fields a person of ordinary skill would reasonably be expected to look for a solution to the problem facing the inventor," when declining to find fasteners for garments analogous art for fasteners for a hose clamp) (quoting *In re Wood*, 599 F.2d 1032, 1036 (CCPA 1979)). Regardless, Petitioner never links the alleged problem of assembly, disassembly, and connection to Jumo. We do not find Jumo to discuss that problem, and Petitioner's expert merely asserts that "a POSA would have found Jumo reasonably pertinent to the same problems." Ex. 1100 ¶ 79. We do not credit this unsupported assertion, and aside from this bald assertion, Petitioner and its expert do not explain why or how a POSA would have found Jumo reasonably pertinent to this problem. 37 C.F.R. § 42.65(a). Further, there is nothing we see that stands out about the particular desk lamp connector in Jumo to afford it the status of a "familiar item[]" that would otherwise simply lend itself to consideration. *See KSR*, 550 US at 420.[29]

Under our review of the evidence before us, absent sufficient evidence to the contrary, we are left to conclude that a person of ordinary skill in the art would only consider Jumo through hindsight reconstruction of the

[29] For example, we would expect a person of ordinary skill in the art to be familiar with commonplace fasteners, connectors, and the like, which have general applicability to fastening and connecting. Here, we are dealing with a more complicated mechanical/electrical connection, and Jumo appears, for all intents and purposes, to be esoteric.

claimed invention. The second prong of the analogous art test is not whether a person of ordinary skill in the art could find something useful in a piece of prior art assuming it was before him, but whether a person of ordinary skill would have looked to the prior art in the first place. *In re Clay*, 966 F2.d 656, 659 (Fed. Cir. 1992) ("A reference is reasonably pertinent if . . . logically [it] would have *commended itself* to an inventor's attention in considering his problem.") (emphasis added). The case here is similar to that in *Oetiker*, where the Federal Circuit found that art addressing facially similar problems (fasteners for garments and fasteners for hoses) were not analogous given the particular circumstances. *Oetiker*, 977 F.2d at 1447. In the present case, even though the prior art has a mechanical-electrical connection, we do not find it credible that a person of ordinary skill in the art would look to the electrical connectors of Jumo, and Petitioner has provided an insufficient link, in evidence or technical reasoning, showing that such a person would look to a French desk lamp from the 1950s when considering how to hook up trunk sections in a lighted artificial tree. *See In re Kubin*, 561 F.3d 1351, 1359 (Fed. Cir. 2009) ("where a defendant merely throws metaphorical darts at a board filled with combinatorial prior art possibilities, courts should not succumb to hindsight claims of obviousness").

In our Decision on Institution (then, in IPR2016-00800), we understood Petitioner to be arguing that Jumo's connectors would help solve wear problems in an Otto-style connector. Ex. 3001, 15–16. Reviewing the substantially developed record now under the requirement that unpatentability be established by Petitioner by a preponderance of the evidence, however, we are not persuaded that sufficient evidence exists to support this problem-solution position under the higher standard. The

problem discussed in the ’186 patent above revolves around convenience of *assembly*. We find that Jumo is concerned with *durability*. Ex. 1009, 4:6–9 (issues include repeated bending, strain-hardening, and wear); *Clay*, 966 F.2d at 659 (“If [the prior art] is directed to a different purpose, the inventor would accordingly have had less motivation or occasion to consider it.”). Petitioner does not provide evidence that durability was a specific problem in this field, or that a person of ordinary skill in the art would modify the Miller/Otto connector with Jumo in order to address durability issues for that type of connector.[30] Even if we were to extract from Jumo a teaching of relief from wear and tear of rotational movement of the type relevant in artificial trees, we have been provided no evidence that such a problem was identified in the art and needed solution by Jumo’s device here—the problem alleged by Petitioner relates to ease of assembly. Petitioner has failed to provide sufficient evidence that Jumo is reasonably pertinent to a problem faced by the ’186 patent, even under its own proposed definition of the problem.

c. Rationale

Accordingly, with respect to Petitioner’s rationale, we find that it was made only in hindsight. What reason is there for modifying the trunk connections of Miller to include the electrical-mechanical connectors of Otto? To follow a known technique in the particular field of endeavor that improves assembly and appearance by having rotatable trunk portions with

[30] Clearly, durability is, on some level, an issue with any good. What we mean here is to question, for example, whether there was any particular problem that would have been recognized and to which Jumo’s solution would lend itself.

internal electrical connectors that are connected at the same time as the mechanical connection. Ex. 1008, 17:2–10, 18:10–11, 18:23–24.[31] The problem here is that Petitioner identifies in Otto no structure for this electrical-mechanical trunk connection. Thus, Petitioner turns to Jumo. What is the reason for further modifying Miller's trunk connections, as modified by Otto, to have Jumo's connectors? Allegedly, to protect the

---

[31] The dissent suggests we can stop our analysis here. We do not because the ground offered by Petitioner is "Miller in view of Otto and Jumo" (Pet. I, 4), because that is the ground on which we instituted (Paper 38, 21), and, most importantly, because Petitioner relies on Jumo to teach the inter-trunk connections of the tree portions. *See, e.g.*, Pet. I 21 ("Patent Owner may allege that *Miller-Otto* does not provide express details regarding the claimed features of the connectors. However, any claimed features not expressly found were well known in the prior art, e.g., as explicitly taught in *Jumo*"), 26–27 ("a POSA would have readily understood how to modify *Miller*'s trunk sections as suggested by *Otto* . . . by providing a mechanical and electrical connector as taught by *Jumo*"), 33–34 ("When *Miller* is enhanced with *Otto-Jumo*, this connection is between tree portions"). Petitioner provides no explanation of what structures would be obvious in view of Otto to satisfy the claim limitations. Thus, Jumo is necessary to Petitioner's ground. That Petitioner couches its ground in terms of what Patent Owner *may allege* does not change the fact that Petitioner set forth an obviousness ground containing and requiring the three references. Pet. I 4. We also disagree with the dissent that *Microsoft Corp. v. Parallel Networks Licensing, LLC*, No. 2016-2515, 2017 WL 5953512, at *5 (Fed. Cir. Dec. 1, 2017), would require us to consider a Miller-alone obviousness ground. *Microsoft* stands for the premise that the Board must consider all factual positions explicitly advanced within a given, explicitly stated ground. It does not require or suggest, in our view that we *must* consider *grounds* not explicitly stated. Although Petitioner provides some hedge-words (e.g., "[t]o the extent Patent Owner may allege *Miller* does not expressly teach this element," Pet. I 47), there is nothing in the Petition explicitly identifying this alternative ground (e.g., if Petitioner had instead stated, "Miller alone or in view of Otto and Jumo" at Pet. I 4).

connector from damage caused by rubbing contacts as identified by Jumo. Pet. I 25. However, unlike Otto, which was addressing an assembly problem known in the art, Jumo's solution is for durability problems with desk lamps having articulating arms (by, effectively, fixing the arms). We have no evidence that a person of ordinary skill in the art would consider Jumo for any other problem. It is not clear to us, nor does Petitioner provide evidence showing, that a person of ordinary skill in the art, viewing Miller-Otto, would consider Jumo's solution.

Further, as to Petitioner's rationale that the proposed combination is a "substitution of one known element for another," Pet. I. 25–26, that presumes that Jumo is a known substitutable element for an artificial tree. Given that Jumo is not in the field of endeavor and that we are not persuaded it is reasonably pertinent, it is not clear how Jumo can be a "known element" to substitute.

We also note, as an aside and from a practical standpoint, that the strains on a desk lamp are generally torqueing away from the center of gravity (*see* Ex. 1009, Fig. 4), whereas the strains on an artificial tree are compressive, i.e., straight up and down. Thus, it is not even clear that Jumo's durability solution is of the same sort of strains realized in electrical connections in artificial trees. In conclusion, Petitioner has not articulated sufficiently a reason with rational underpinning for modifying the Miller-Otto tree to include the connectors of Jumo in its grounds against independent claims 1, 10, 20, and 28.

9. *Secondary Considerations*

This discussion applies to all challenged claims. We are faced with a remarkable amount of evidence suggesting the non-obviousness of the claimed invention.

a. Nexus of Patent Owner's "One Plug Tree" Products

"[T]here is a presumption of nexus for objective considerations when the patentee shows that the asserted objective evidence is tied to a specific product and that product is the invention disclosed and claimed in the patent." *WBIP, LLC v. Kohler Co.*, 829 F.3d 1317, 1329 (Fed. Cir. 2016). Patent Owner argues that its products have nexus (PO Resp. 94) and that competitor's allegedly infringing products have nexus (*id.* at 92–94). Patent Owner provides citations to extensive declaratory evidence, which in turn cites to extensive "comparative analysis" charts. Ex. 2090 ¶ 154 (citing Exs. 2214, 2215) (discussing Patent Owner Willis Electric products); *id.* ¶ 155 (citing Exs. 2247, 2256) (discussing Petitioner Polygroup's products).

Petitioner argues that Patent Owner is effectively relying on a trademark ("One Plug Tree," or "OPT") as a proxy for the claimed invention, but that not all uses of a trademark necessarily meet all claim limitations. Pet. Reply 51–53. Although we agree with Petitioner in principle that not all uses of a trademark necessitate a particular structure, Petitioner's evidence that Patent Owner used the OPT trademark outside the scope of the claimed subject matter appears to be limited to certain products sold in 2012. PO Sur-Reply 2–3 (citing Ex. 2307 ¶¶ 7–9; Ex. 2309). According to Patent Owner, in 2012, "PO had difficulty sourcing reliable components for a coaxial high-voltage tree." *Id.* Petitioner does not allege any further use of OPT trademark outside the scope of the claims, and our

review of Patent Owner's analysis of nexus between the claimed invention and it's OPT design is otherwise convincing. Exs. 2214, 2215. We credit the testimony of Patent Owner's expert, Dr. Brown, that these analyses are representative of the body of Patent Owner's OPT products, less Patent Owner's data from its 2012 sales. Ex. 2090 ¶ 154. Thus, we find we can use the term "One Plug Tree" as a reasonable proxy for the claimed invention.

Petitioner next argues that Patent Owner is improperly incorporating its analyses by reference (Pet. Sur-Sur-Reply, 2), but we do not find Patent Owner's citations here improper. *See* 37 C.F.R. § 42.6(a) (3) ("Arguments must not be incorporated by reference from one document into another document."). What constitutes incorporation by reference of *arguments* is dependent on the circumstances. Here, it is quite easy to look at the pictures in evidence and compare them to the claims; the claims are to a particular structure, and that structure is shown plainly in the pictures. Thus, under the particular circumstances here, effectively no written analysis needs to be provided; the pictures speak for themselves. Because effectively no meaningful analysis need be written in this circumstance, we determine that we do not need a drawn-out analysis in Patent Owner's papers. Accordingly, the citations and brief explanation of what is in the cited documents is sufficient given the unique circumstances here.

This is in stark contrast to the *CaptionCall* case cited by Petitioner. Pet. Sur-Sur-Reply 2 (citing *CaptionCall, LLC v. Ultratec*, IPR2015-00637, Paper 98, 68–69. In the *CaptionCall* case, the claims included a significant amount of functional language not immediately discernable using pictures, yet the relevant briefing contained no explanation for how the panel was to

bridge the gap. *CaptionCall*, IPR2015-00637, Paper 98, 5–6, 64–65. In addition, there were considerable questions as to whether the evidence provided was representative of the devices sold, and substantial doubt as to the credibility of the underlying testimony. *Id.* at 65–67. None of those are problems in this proceeding.

Similarly, in the cited *Microsoft* case, the panel struggled tying the evidence with the bare citation provided, noting "we are unable to determine whether Patent Owner's evidence is tied to specific products that embody the claimed invention." *Microsoft Corp. v. Bradium Tech.*, IPR2016-00449, Paper 67, 64–65. The lack of propriety of the bare citation in that instance was also tied to the particular circumstances of the case, which required further explanation by the panel.

In conclusion, the nexus evidence provided by Patent Owner regarding its One Plug Trees is sufficient to allow us to conclude that evidence regarding the One Plug Trees (aside from 2012) fairly represents and is coextensive with the claimed subject matter.

b. Nexus of Petitioner's "Quick Set" Products

Similarly, the evidence provided by Patent Owner regarding Petitioner's "Quick Set" products is equally compelling. PO Resp. 92–94 (citing Ex. 2090 ¶¶ 153–163; Ex. 2247; Ex. 2257). Petitioner argues that Patent Owner's infringement charts are lacking, e.g., explanation on the claim term "joined to," and directs our attention to its non-infringement contentions from a related district court proceeding. Pet. Reply 54 (citing Ex. 1100, in turn citing Ex. 1051). These contentions largely do not deny that the products include the claimed structures in isolation but argues that specific details as to how Patent Owner construes the claim are missing such

that it denies the product includes the claim elements. *See, e.g.*, Ex. 1051, 17–18.

We consider whether there is sufficient connection between the claimed invention and these accused products to determine whether evidence regarding the success of the accused products can be considered evidence regarding the success of the merits of the claimed invention. As evidenced in Patent Owner's charts cited above, we are persuaded that the idea of having an electrical-mechanical connection in a lighted tree with "tree portions" arranged like those claimed found commercial success. Accordingly, we find a credible degree of nexus between Petitioner's "Quick Set" trees and the claimed invention.

c. Nexus Provided By Survey Evidence

Patent Owner lastly offers as evidence of nexus a survey it conducted. PO Resp. 94–99 (citing Ex. 2099). The survey consisted of a series of videos and pictures of artificial trees along with a series of questions. Ex. 2099 ¶¶ 9–10. The videos showed how the trees were assembled and the pictures showed the connections made during assembly. *Id.* ¶ 10. Each survey taker was presented with videos and photos contrasting two trees, and then was asked which was their preference and why. *Id.* Various survey takers were presented with various pairs of trees. One set tested the OPT design versus similar designs missing one or more claimed features. PO Resp. 95–96. Patent Owner's Response shows the survey takers had a strong preference for rotatable segments versus a fixed orientation, a pre-lit tree versus a non-pre-lit tree, and internal wiring versus external wiring. *Id.*; Ex. 2099 ¶ 8 ("after being exposed to a tree embodying the '186 and '187 Patents and a tree lacking one of the patented features, consumers answered

both that they would prefer to purchase a tree with the patented design and would pay more for a tree with the patented design as compared to multiple other alternative designs that lack at least one of the patented features").

Petitioner argues that the survey is fundamentally flawed because the survey showed trees of different heights, light colors, fullness, and appearance from the OPT tree. Pet. Reply 55 (citing Ex. 1102 ¶¶ 13, 26–27). As to Petitioner's argument regarding the different heights, colors, etc. of the trees in the video, we are not persuaded that such distinctions detract from the utility of the survey. Patent Owner's survey allowed for users to choose one or more reasons why they selected the tree they did, specifically:

(1) Overall ease of assembly
(2) Ease of connecting tree components
(3) Tree comes pre-strung with lights
(4) Tree color
(5) Color/type of lights
(6) Height of tree
(7) Price
(8) Base/stand

Ex. 2099 ¶ 52; *see also id.* ¶¶ 55, 56 (the same "reasons" list as follow ups to similar questions). Thus, users who chose one tree over another because of the color of the lights could indicate as much as a reason for his or her selection. Indeed, the survey results show that the color of the lights and height of the tree did play some role, but that role was overshadowed by other factors more closely linked to the claimed invention, e.g., ease of assembly (due to the modular tree portions). *Id.* ¶¶ 125, 130, 133 (results of the "reasons" question for the OPT design comparison survey group). Thus, the survey accounts for, and lets us measure and weigh accordingly, the

extent that non-claimed elements drove the results. Accordingly, we are not persuaded that we should discount this evidence.

As to Petitioner's larger point, that we should toss out Patent Owner's survey because it "failed to isolate the claimed features from the unclaimed features of the different trees," Pet. Reply 55, we are not persuaded that the nexus analysis is so binary. Nexus can be thought of as a sliding scale that serves to link objective evidence to the merits of the claimed invention according to the proportional strength of the link between the evidence and the merits of the claimed invention. *See Ashland Oil, Inc. v. Delta Resins & Refractories, Inc.*, 776 F.2d 281, 306 (Fed. Cir. 1985) (holding that the weight attributed to the secondary evidence is proportional to its nexus to the merits of the invention, implying that a weak nexus requires some discount factor to the evidence, but a strong nexus does not). Even if there were flaws in the survey in some areas that would not necessarily undo those areas of the survey that were sound. *Demaco Corp. v. F. Von Langsdorff Licensing Ltd.*, 851 F.2d 1387, 1394 (Fed. Cir. 1988) ("A requirement for proof of the negative of all imaginable contributing factors would be unfairly burdensome, and contrary to the ordinary rules of evidence."); *accord Cont'l Can Co. USA, Inc. v. Monsanto Co.*, 948 F.2d 1264, 1273 (Fed.Cir. 1991).[32] Here, we find no flaws that call into doubt the overall probative value of the survey. *Cf. Rosemount, Inc. v. Beckman Instruments, Inc.*, 727 F.2d 1540,

[32] Clearly, some flaws may be so great as to call into question the entire piece of evidence. We understand the law to say here that a flaw does not necessarily undo the entire piece of evidence. *See Ashland Oil, Inc.*, 776 F.2d at 306.

1546 (Fed. Cir. 1984) (conjecture that some success is attributable to other elements "inadequate to overcome the objective evidence of record").

Petitioner then argues that the videos used in the survey show the assembly and internal connectors, something not specifically tied to the claims. PO Resp. 55 (citing Ex. 1102 ¶¶ 28–30). We have construed "tree portion" to give it the meaning provided by the claims read in view of the specification, which breathes life into the notion that the trunk, branches, and lights are structurally arranged in a way that allows for modular/unitary use of those portions. This structural arrangement goes to the ease of assembly, and the videos shown to the respondents allows for them to see the implication of that particular structural arrangement. Accordingly, we are persuaded that the results in the survey regarding assembly are tied to the claims.

Petitioner lastly offers an alternate survey it asserts comes to the opposite conclusion. Pet. Reply, 56 (citing Ex. 1102 ¶¶ 61–68). Petitioner's expert criticizes Patent Owner's survey because "respondents were likely reacting to the differences in the look of the two trees (e.g., height, fullness, color of lights) rather than the Patented Features." Ex. 1102 ¶ 68. Petitioner's survey focused on a One Plug Tree versus a similar tree that had only one rotational alignment, and came to the opposite conclusion, with respondents favoring the single alignment tree versus the One Plug Tree. *Id.* ¶¶ 62, 66–67.

Missing from Petitioner's counter-survey is the follow-up question Patent Owner asked as to *why* the respondent chose the tree they did. This is especially important given the striking visual contrast between the two selections in Petitioner's survey. The following are still images from the

counter-survey provided for the One Plug Tree (Ex. 2238, in two parts) and Petitioner's allegedly similar, one-way tree (Ex. 1301):

> Both images above depict an artificial tree. The tree on the left, from Exhibit 2238, is depicted in a bland studio environment, whereas the tree on the right, from Exhibit 1301, is depicted in a nicely decorated home setting.

Given the striking visual differences between these images and the lack of opportunity to explain the selection response, it is difficult to assign much weight to this survey. As Patent Owner's expert points out, the professional actress assembling the one-way, non-OPT design did so in such a fluid, practiced manner that the video does not test effectively a preference for all-way versus one-way trees. *See* Ex. 2305 ¶¶ 5–7. Accordingly, the strength of the conclusion Petitioner would have us make (people choose non-OPT vs. OPT) is weak when it could be that other factors may have contributed to the selection. *See id.* ¶¶ 8–9. We credit the testimony of Patent Owner's expert that the survey largely tested the quality of the video presentation rather than the tree designs. *Id.* ¶¶ 10–13. In sum, we have considered Petitioner's rebuttal survey but are not persuaded that Patent Owner's survey results were in error or should be afforded less weight.

Reviewing the survey evidence, we are persuaded that Patent Owner has demonstrated that "that customers would be less likely to purchase . . . [an artificial tree] without the [patented] feature[s] and would pay less for

[artificial trees] without it." *Apple Inc. v. Samsung Elecs. Co.*, 839 F.3d 1034, 1055 (Fed. Cir. 2016) (discussing nexus of commercial success evidence).

d. Specific Evidence of Non-Obviousness – Introduction

Patent Owner offers a substantial body of evidence cabined in one of several non-obviousness doctrinal buckets—industry praise, copying, commercial success, etc. PO Resp. 79–139. Petitioner offers its response. Pet. Reply 57–74. We have considered this evidence in light of our nexus determinations above. Our discussion that follows provides our analysis of the evidence that we determine weigh towards supporting a finding of non-obviousness.[33]

e. Sales and Market Share Data

One of the key tenets of commercial success case law is that the commercial success must come from the merits of the invention and not from external factors, or merely from features already known in the art. *Cable Elec. Prods., Inc. v. Genmark, Inc.*, 770 F.2d 1015, 1027 (Fed. Cir. 1985); *Ormco Corp. v. Align Tech., Inc.*, 463 F.3d 1299, 1312 (Fed. Cir. 2006) (finding uncompelling secondary evidence directed to unclaimed features or to features known in the prior art); *see also J.T. Eaton & Co., Inc. v. Atl. Paste & Glue Co.*, 106 F.3d 1563, 1571 ("[T]he asserted commercial success of the product must be due to the merits of the claimed invention

[33] We have considered Patent Owner's remaining evidence not discussed herein. Although we do not consider the remainder of the secondary evidence useful or necessary to support a finding of non-obviousness, we note that none of the evidence offered by Patent Owner there weighs towards a finding of obviousness.

beyond what was readily available in the prior art."); *Richdel, Inc. v. Sunspool Corp.*, 714 F.2d 1573, 1580 (Fed. Cir. 1983) (holding claims obvious despite purported showing of commercial success when patentee failed to show that "such commercial success as its marketed system enjoyed was due to anything disclosed in the patent in suit which was not readily available in the prior art"). We must be careful when discounting evidence tending to show that commercial success was due to features known in the prior art because virtually every device is a combination of known features. "[P]roof of nexus is not limited to only when objective evidence is tied to the supposedly 'new' feature(s)." *WBIP*, 829 F.3d at 1330. We must consider "the claimed combination as a whole that serves as a nexus for the objective evidence." *Id.*

We first review Patent Owner's own sales data. According to the data provided, Patent Owner began selling trees embodying the claimed invention in 2011, and since that time those trees have come to constitute about 60% of the trees its sells, with its percent of revenue and margin proportionally larger for the OPT designs over the non-OPT designs. Ex. 2098, 29 (Table 2A, "Patented % Share of Total" sub-table); Ex. 2307, 36 (Table 2A Updated [with corrected 2012 data], "Patented % Share of Total" sub-table). What we find persuasive about this data is not that Patent Owner is selling more OPT designs than non-OPT designs. There are many reasons not having to do with the merits of the invention for why a manufacturer would displace an old design with a new one.[34] What is useful in this data is

[34] For example, updated tooling, simpler manufacturing processes, or new supplier agreements.

that the OPT designs provide increased revenue *and* margin over non-OPT designs. *See id.* That shows that OPT designs not only sell for more, but they are more profitable—charging more money is not necessarily success, but charging more money and making more profit (while selling no fewer trees, on whole) is indicative of a commercially successful product. *Id.* ¶¶ 8–13 (Patent Owner's economic expert testifying that success is indicated by considering sales mix, price, and margin). According to this evidence, the OPT design allows Patent Owner to make more money on a given tree.

Petitioner criticizes Patent Owner for not isolating the claimed features over unclaimed features in this data. Pet. Reply 59–62 (citing Ex. 1104, expert testimony of Richard Eichmann, Petitioner's economic consultant). Mr. Eichmann argues that other factors could be in play that would explain why OPT designs had increased sale, revenue, and/or margin. Ex. 1104 ¶ 15. We understand Mr. Eichmann to suggest that, for example, perhaps OPT designs had more lights than non-OPT designs, or that Patent Owner marketed OPT designs in the premium product space, which would naturally attract higher margins. Patent Owner's expert, Mr. Degen, persuasively explains how his analysis accounted for such non-claimed factors. Mr. Degen performed a paired t-test analysis of the average sale price (ASP) and margin for OPT versus non-OPT designs when specifically discriminating between variables such as tree height, light type, and light count. Ex. 2307 ¶ 24, Table 11. Mr. Degen explains that his one-sided, paired t-test is the appropriate statistical test (versus Mr. Eichmann's two-sided, unpaired t-test) because the two otherwise similar tree designs are paired off against each other (hence, paired) and because the difference being tested is whether the one is greater than the other (hence, one-sided).

See id. The results of Mr. Degen's t-tests, which we credit, explain that OPT designs have an average higher sale price and margin over non-OPT designs, even controlling for year, height, light type, and light count.[35] *Id.* at 53 (Table 11). Accordingly, we find that OPT designs generally have higher revenue and margin due to the claimed features rather that non-claimed features.[36]

Petitioner also criticizes Patent Owner for only addressing approximately 14% of the market (Petitioner and Patent Owner's combined share). Pet. Reply 63–64. Although it would be more useful to know about the activities of the entire artificial tree market, Patent Owner does provide evidence regarding market share (just not all of the market). Further, we do not find the quantity of information on hand here insufficient to make a finding regarding the relative success of OPT designs. For the information on the parties before us, on which it is most practical and cost-effective to attain data in this proceeding, we see that OPT designs are displacing non-OPT designs within each parties' artificial tree portfolio. Ex. 2307, 37 (Table 2B—Patent Owner's sales); Ex. 2307, 45 (Table 7B—Petitioner's sales). We are not apprised of a reason why we need more information, e.g., on the portfolios of the other 86% of the market. *See* Ex. 2307, 51 (Table 9C—estimated market share for all artificial trees). If there were some

---

[35] Light count for the average sale price, however, is at the 87% level versus the 90% level. *See also* Ex. 2307, n.29 (explaining that the 90% level means, for example, that "the statistical test will have a false positive no more than 10 percent [(100%-90%=10%)] of the time").

[36] Even if some small amount may yet be due to non-claimed features, these statistical tests have reduced the possibility for that below a threshold level, such that we can safely make our findings.

reason to believe the 14% of the market were different from the remaining 86% of the market, then we could understand the need to know more. Here, we have no reason before us as to why we should ask the parties to undertake an expensive and apparently useless survey of an enormous market. Instead, based on the evidence of record and the behavior of the two parties before us, we find that OPT designs are displacing non-OPT designs because they offer greater profits. Because the design offers greater profits, that explains their relative increase in market share. Accordingly, we find the claimed invention to have significant commercial success.

f. Industry Praise and Licensing

Evidence that a person of ordinary skill in the art recognized the inventiveness of the product can be evidence of non-obviousness. *Vulcan Eng'g Co. v. Fata Aluminium, Inc.*, 278 F.3d 1366, 1373 (Fed. Cir. 2002) ("Appreciation by contemporaries skilled in the field of the invention is a useful indicator of whether the invention would have been obvious to such persons at the time it was made."); *Institut Pasteur & Universite Pierre Et Marie Curie v. Focarino*, 738 F.3d 1337, 1347 (Fed. Cir. 2013) ("[I]ndustry praise . . . provides probative and cogent evidence that one of ordinary skill in the art would not have reasonably expected [the claimed invention]."). For example, evidence that shows the product was "warmly received in the [relevant] industry" may indicate non-obviousness. *Ecolochem, Inc. v. So. Cal. Edison Co.*, 227 F.3d 1361, 1380 (Fed. Cir. 2000); *WBIP*, 829 F.3d 1317 at 1334 ("Industry participants, especially competitors, are not likely to praise an obvious advance over the known art.").

Patent Owner offers its arguments and evidence regarding industry praise, industry adoption, and licensing. PO Resp. 129–139. Petitioner

offers its rebuttal. Pet. Reply 71–73. We address these secondary considerations together because together they tell a story about how manufacturers and retailers of artificial trees recognized that Patent Owner created a particular technology they wanted to make use of.

i. Retailers

Patent Owner offers evidence that retailers thought Patent Owner's OPT design was interesting and many wanted exclusive licenses. PO Resp. 132, 134–135. For example, retailers such as Lowe's, Home Depot, CVS, and Canadian Tire Corporation requested exclusive deals. Exs. 2136 (Lowe's), 2137 (Home Depot), 2131 (CVS), 2139 (Kmart),[37] 2140 (Canadian Tire); Ex. 2091 ¶¶ 120–127 (the inventor testifying as to licensing). These retailers, and others, also expressed significant interest in the OPT design. Ex. 2117 ("[HSN is] extremely interested in the one-plug tree"); Exs. 2126 (Lowe's buyers showing interest in "One Plug" tree); Ex. 2134, 2141 (report-out that Home Depot buyers were interested in OPT design); *see also* Ex. 2020 ¶ 8 (former Lowe's buyer testifying that he was "immediately impressed" with the OPT design); Ex. 2093 ¶¶ 10, 15–17 (former Lowe's buyer testifying that "[the OPT design] was like magic" and that it was a featured product for their Christmas program); Ex. 2095 (another tree manufacturer employee testifying that "Willis Electric's One Plug Tree technology is great!"); Ex. 2094 ¶ 14 (former Willis sales representative testifying that "everyone I showed it to was very excited");

[37] We do not find Kmart to have asked for an exclusive deal in Exhibit 2139. Regardless, Exhibit 2139 does refer to another company's exclusive request, and at a minimum, shows Kmart's level of interest in the products.

Ex. 2096 ¶ (supplier testifying that "[potential customers] were very excited about the prospect of selling trees with [OPT] technology").

Petitioner argues that the evidence regarding retailers comes from biased declarants, sales meeting minutes, and internal emails. Pet. Reply 72 (citing the evidence it challenges). Petitioner appears to allege bias on the assertion that declarants Luk (Ex. 2095), Rodgers (Ex. 2093), Tan (Ex. 2037), and Stone (Ex. 2094) are "PO's customers and sales representatives." *Id.* at 70. These declarants have all provided their background and disclosed their relationship with Patent Owner, and have been cross examined. Ms. Luk works for another tree manufacturer that has worked out an arrangement to purchase Patent Owner's technology. Ex. 2095 ¶¶ 3, 7, 11. Ms. Luk's company could make its own OPT design trees if no patent existed; we see no bias, just an existing business relationship. Ms. Rodgers and Mr. Tan both worked for a third party. Ex. 2093 ¶ 4; Ex. 2037 ¶ 3. None of these witnesses would financially benefit from the outcome of this case, and we are not aware of any other reason to doubt their reliability. Mr. Stone is a sales representative for Patent Owner, serves as a fact witness, and was subject to cross examination. We find the declaratory evidence sufficiently reliable to credit. Regarding the sales meetings minutes and internal emails, Petitioner has either not raised an evidentiary objection or we have not relied on them. Accordingly, Petitioner's argument regarding the impropriety of this evidence is merely an unpersuasive assertion.

Petitioner further argues that the retailers are not "industry competitors," *id.*, but we are not aware of any reason why we may only consider evidence from *competitors* rather than the industry as a whole. *See WBIP*, 829 F.3d at 1334 (separately mentioning "[i]ndustry participants" and

"competitors"); *Ecolochem*, 227 F.3d at 1380 (referring to the "industry"). The evidence relied upon by Patent Owner is from the industry and is indicative of the industry response to the claimed subject matter.

Petitioner also argues that the "exclusive" arrangements requested by the retailers really are not because of the claimed features but rather because of "cosmetic difference[s] between the trees." Pet. Reply 71 (citing Ex. 1110, 105:1–3). The evidence relied upon by Petitioner here, the testimony of Mr. Tan (a former buyer for the Christmas program for Lowe's Canada, *see* Ex. 2020 ¶ 3), does not mitigate the value of Patent Owner's evidence. Mr. Tan explains that retailers routinely seek exclusivity to various tree parameters (lights, tips, etc.) from a particular manufacturer so that no retailer has a directly identical tree as a competitor. Ex. 1110, 105:1–3; *see also id.* at 108:2–5 (testifying that the purpose of an exclusive arrangement is so that the retailer "could legally . . . promote it as only at [the retailer]"). However, as Mr. Tan explains, there are also requests for exclusivity on technology, not just on a product configuration:

> From the pre-lit tree assortment perspective, none of the trees that I carried were carried by any other retailer. So by default, they were all exclusive. So none of – none of my – none of the vendors would sell the exact same construction tree to another retailer.
>
> Having said that, what we wanted was the exclusivity to call out the One Plug feature. That's a feature we would advertise – we wanted to advertise and promote as exclusive to Lowe's.

Ex. 1110, 104:10–19; *see also id.* at 108:13–109:3; 110:12–18 ("exclusive arrangement" versus "exclusive on the technology"); 100:21–101:2 ("exclusive arrangement, or key technology that we would ask for an exclusive on"). Accordingly, requests for exclusivity by retailers are not

necessarily constrained to the typical exclusivity that virtually all retailers request. Instead, the requests for exclusivity in the evidence before us appears tied to the OPT technology, or at least in conjunction with it, rather than only specific cosmetic configurations. Ex. 2136, 4 (asking for exclusivity on the OPT technology, plus a few additional features); Ex. 2137 (Patent Owner's agent declining to offer "exclusivity on this technology"); Ex. 2140 (email subject is "Exclusivity on the 30 second one plug tree"); Ex. 2131 (Patent Owner indicating, "[i]f we do sell [One Plug] tree, it will be exclusive to drug chains").

Lastly, Petitioner argues that the alleged praise is not tied to the claims. Pet. Reply 72–73. As we discussed in the nexus section above, sufficient evidence exists for us to tie the label of "One Plug Tree" to the claimed invention for us to consider this evidence reflecting on the merits of the claimed invention. The products actually sold were shown to have strong nexus, thus it stands to reason that the products offered for sale and discussed in Patent Owner's evidence here have a strong nexus.[38] Accordingly, Patent Owner has offered credible evidence of the reaction of retailers to the claimed invention that tends to support its non-obviousness position.

ii. Manufacturers

Patent Owner offers evidence that four artificial tree manufacturers sought to license Patent Owner's patents, and that one license was granted. PO Resp. 130–131 (citing Ex. 2170 (license with HSC); Exs. 2095, 2115

[38] Even if it were somewhat weaker of a link, that does not defeat nexus but merely reduce the weight of the evidence. *See Ashland Oil, Inc.*, 776 F.2d at 306.

(Botanex sought to use OPT design); Ex. 2154 (Holiday Bright Lights investigating license agreement); Ex. 2155 (proposed license agreement with Santa's Best)). Petitioner argues that only one licensing agreement was made, and that it was "***not*** based on the claimed combination." Pet. Reply 71 (citing Ex. 2170). Reviewing Exhibit 2170, however, we see the '186 patent listed as a licensed product. Further, that the licenses were not granted does not preclude the evidence from showing that licenses were sought. Evidence showing that licenses were sought is evidence that the license-seekers saw value in a license, regardless of whether the license deal was consummated for other business reasons. *See Asetek Danmark A/S v. CMI USA, Inc*., 100 F. Supp.3d 871, 882-83 (N.D. Cal. 2015) (several unconsummated requests for patent licenses "supports a finding of non-obviousness, as it tends to show industry recognition."); *see also Mintz v. Dietz & Watson, Inc*., 679 F.3d 1372, 1379-80 (Fed. Cir. 2012) (remanding to district court for analysis of secondary considerations and noting that companies accused of infringement had requested to license the patent-in-suit). Accordingly, Patent Owner has offered credible evidence of the reaction of other manufacturers to the claimed invention that tends to support its non-obviousness position.

10. *Obviousness Determination for Claims 1, 10, 20, and 28*

Weighing the evidence before us as a whole, we determine that Petitioner has not established by a preponderance of the evidence that claims 1, 10, 20, and 28 are unpatentable. We do not find that Jumo is analogous art. We do not find that Petitioner has articulated a rationale underpinning for combining the references that is supported by factual underpinnings. We find that sales and market share data establish commercial success, and that

industry praise and licensing also tend to demonstrate non-obviousness.[39] Thus, weighing the evidence as a whole, we do not find the preponderance of the evidence to support a determination of obviousness of independent claims 1, 10, and 20 in view of Miller, Otto, and Jumo, and of independent claim 28 in view of Miller, Otto, Jumo, and Pan.

D. Dependent Claims

Dependent claims 3, 4, 6–9, 11, 15–19, 21, 22, 25, and 26 are alleged to be unpatentable over a combination of Miller, Otto, Jumo, and either Lessner, Janning, or Yang. Petitioner's grounds with respect to these references do not cure the underlying deficiencies addressed above. Accordingly, for similar reasons, we determine that Petitioner has not shown, by a preponderance of the evidence, that claims 3, 4, 6–9, 11, 15–19, 21, 22, 25, and 26 are unpatentable.

IV. THE '187 PATENT

A. Motions

Patent Owner (IPR2016-01612, Paper 132) and Petitioner (IPR2016-01612, Paper 139) both move to exclude evidence. These motions are directed to the same evidence as the similar motions in IPR2016-01610, but using different exhibit numbers. We make the same determinations here as

[39] Even if we were to not consider Petitioner's sales data and exclude all of the challenged evidence from the industry praise and licensing portions of our analysis, and re-weigh all of the remaining evidence, we would still come to the same conclusion, because Patent Owner's sales data and the unchallenged licensing/praise evidence is strong and the obviousness evidence is weak.

we did there. Patent Owner's Motion to Exclude is denied, and Petitioner's Motion to Exclude is dismissed as moot in part, and denied in part.

Patent Owner also filed a Motion for Observations (IPR2016-01612, Paper 130), to which Petitioner filed a response (IPR2016-01612, Paper 147). We have considered these documents.

B. Patentability Analysis

The AIA trials involving the various proceedings addressing the '186 and '187 patents advanced in step with each other. The dispositive issues that have arisen during this proceeding, identified above, also apply to the '187 patent proceedings. Both independent claims 1 and 7 of the '187 patent include a tree portion limitation similar to the tree portion limitation of independent claims 1, 10, and 20 of the '186 patent; our construction of "tree portion" from the '186 patent is equally applicable here.[40] Thus, the Miller-Otto-Jumo combination asserted against independent claims 1 and 7, as well as the claims that depend therefrom, do not adequately address the "tree portion" limitation of claims 1 and 7 of the '187 patent. *See* IPR2016-01612, Paper 28, 27, 38 (Petitioner's ground addressing "tree portion").

Likewise, for the same reasons, Petitioner has not shown Jumo to be analogous art nor has Petitioner articulated sufficient reasons with factual

[40] The application that issued as the '187 patent was a continuation of the application that issued as the '186 patent; the specifications are effectively identical. Ex. 1042, (63), 1:5–9. The main difference between the claims of the '186 patent and the '187 patent addressed in the Petitions against the '187 patent involve addressing the limitation in claims 1 and 7 of the '187 patent specifically requiring the lights to be "affixed" to the branches (hence the addition of the Pan reference). *See id.*, 21:12, 22:30; IPR2016-01612, Paper 28, 4.

underpinning for combining the identified teachings of Miller, Otto, and Jumo in the manner proposed. *See id.* at 19–20, 23–24. In support of non-obviousness, Patent Owner offers effectively the same body of secondary considerations evidence. *See* IPR2016-01612, Paper 61, 80–132. Thus, weighing the evidence as a whole, we determine that a preponderance of the evidence does not support a conclusion of obviousness with respect to claims 1 and 7 of the ’187 patent. The additional references to Pan and Janning do not affect our determination for the dependent claims, such that weighing the evidence as a whole, we determine that a preponderance of the evidence does not support a conclusion of obviousness with respect to dependent claims 2–6 and 8–15 of the ’187 patent. *See* IPR2016-01612, Paper 34 (Petition addressing claims 2–6 of the ’187 patent), Paper 2 (Petition addressing claims 8–15 of the ’187 patent).

V. ORDER

In view of the foregoing, it is hereby:

ORDERED that claims 1, 3, 4, 6–11, 15–22, 25, 26, and 28 of U.S. Patent 8,454,186 have not been determined to be unpatentable;

FURTHER ORDERED that claims 1–15 of U.S. Patent 8,454,187 have not been determined to be unpatentable;

FURTHER ORDERED that Patent Owner’s Motions to Exclude in IPR2016-01610 (Paper 127) and IPR2016-01612 (Paper 132) are denied;

FURTHER ORDERED that Petitioner’s Motions to Exclude in IPR2016-01610 (Paper 134) and IPR2016-01612 (Paper 139) are denied in part and dismissed in part;

FURTHER ORDERED that Patent Owner's Motion's to Amend in IPR2016-01610 (Paper 149) and IPR2016-01612 (Paper 154) are dismissed as moot; and

FURTHER ORDERED that this is a Final Written Decision, and any party to the proceeding seeking judicial review of the decision must comply with the notice and service requirements of 37 C.F.R. § 90.2.

VI.

PLENZLER, *Administrative Patent Judge*, DISSENTING:

I disagree with the majority's claim construction and treatment of Petitioner's challenges, and, therefore, also the ultimate determination that all challenged claims are non-obvious based on weighing the evidence with respect to Patent Owner's evidence of secondary considerations. For at least these reasons, I do not join the majority decision, and respectfully *dissent*. Accordingly, I would reach the additional issues in this case, as well as the issues specific to the other Petitions addressing the '187 patent, including the various motions to amend, which the majority does not reach.[41] I discuss, specifically, only those issues addressed by the majority, and only to the extent necessary to explain my disagreement. I use the challenge to claim 1 of the '186 patent to illustrate the disagreement.

A. Background

Because much of the disagreement focuses on the understanding of "tree portion" and the relevance of the construction of that term to Miller's teachings, I begin with a simple discussion comparing the structure discussed relative to the artificial tree from the '186 patent with that disclosed in Miller.

Figure 2 from the '186 patent (left) and Figure 2 from Miller (right) are each reproduced below.

[41] The majority finds the issues discussed above to be dispositive for all six Petitions directed to the '186 and '187 patents.

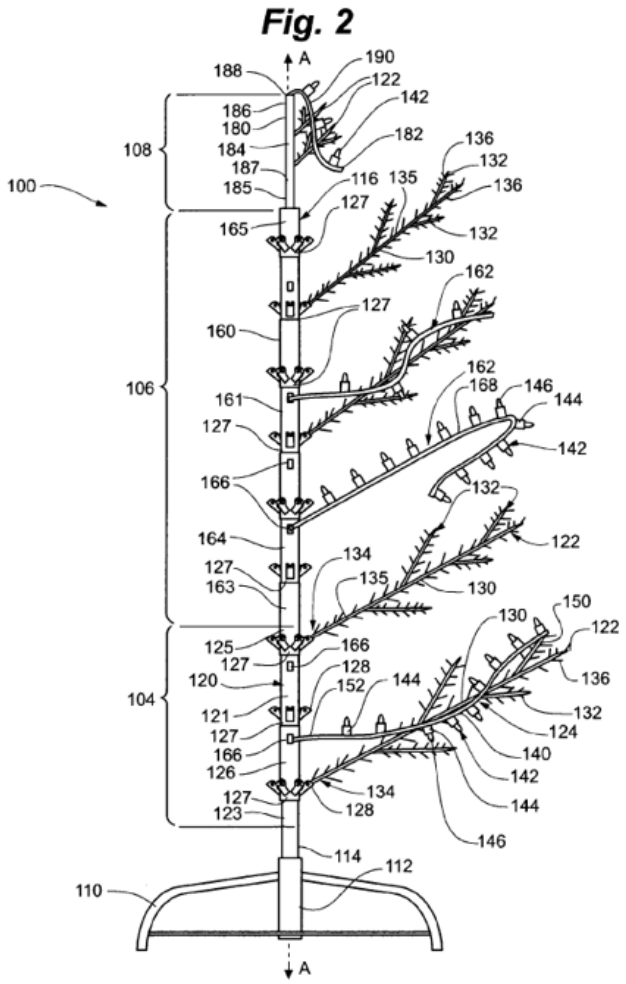

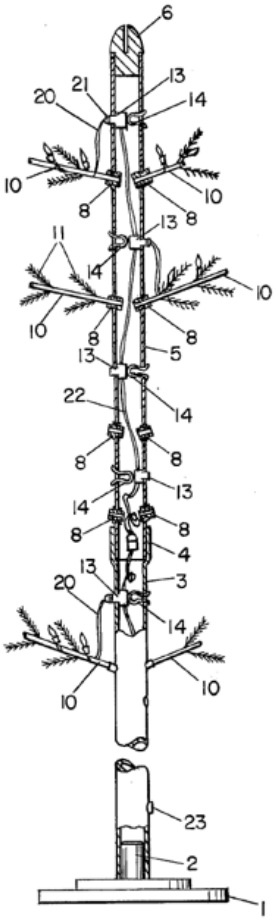

FIG. 2

Figure 2 from the ’186 patent is a front view of its artificial tree in a partially assembled state. Ex. 1001, 5:21–22. Figure 2 of Miller is a front, partial section view of its artificial tree. Ex. 1007, 1:38–40.

The trees in the ’186 patent and Miller each include multiple trunk portions that can be disassembled from one another, electrical connectors/conduits in those trunk portions, branches that are removable from those trunk portions, and light strings that can be located on the branches and connected to the electrical connectors. In fact, these trees are remarkably similar to one another. Indeed, Patent Owner acknowledges that

Miller discloses a tree with these various separate and removable components. PO Resp. 82.

One difference between the trees is the connection between the branches and the trunk portions and how the lights are located on the branches. Both trees, however, include branches that are removably attached to the trunk portions and lights that are removably secured on the branches. The ’186 patent explains that “[t]runk ends of branches 122 may be bent or otherwise formed to define a loop or circular opening such that trunk end 134 of branch 122 may be secured to branch receiver 128 by way of a pin (not depicted) extending through branch receiver 128” and “[f]irst light string 124 is affixed to one or more branches 122 of lighted tree portion 104 via multiple clips 150.” Ex. 1001, 7:1–5, 19–21. Miller includes “apertures 7 . . . around trunk members 3 and 5 [that] receive cylindrical limb sockets 8 . . . of some suitable flexible material, such as rubber or plastic, to enable each socket to be inserted through each aperture” with limbs 10 (and branches 11) located in the sockets 8. Ex. 1007, 2:3–18. Miller includes lights 20 wrapped around its limbs 10/branches 11.

B. Analysis

1. *Claim Construction*

A number of claim terms are in dispute and relevant to the discussion of Petitioner’s challenges. PO Resp. 47–57; Pet. Reply. 7–29.

a. “tree portion”

Claims 1, 10, and 20 each recite a first “tree portion” and a second “tree portion,” each including a “trunk portion,” “branches joined to the . . . trunk portion,” and a “light string.”

Patent Owner contends that a "tree portion" is "a mechanically and electrically connectable modular and unitary portion of an artificial tree." PO Resp. 47 (citing Ex. 2090 ¶¶ 73–77). Patent Owner further contends that "in the artificial tree industry, when a tree is described as 'modular,' it means that there are 'modules' of unitary tree portions trunk [sic] with attached branches" and "[w]ithout branches or lights, there is only a trunk section or a trunk portion, not a tree portion." *Id.* at 48 (citing Ex. 2091 ¶¶ 26–33, Ex. 2095 ¶¶ 10, 12, 20, Ex. 2092 ¶¶ 14, 21, 27–28, Ex. 2090 ¶¶ 73–77). Petitioner disagrees, arguing that "tree portion" is simply "a part of a tree" and needs no construction. Pet. 21.

Although I agree with Petitioner, it is unnecessary to make such a determination in order to resolve the dispute before us. All that is necessary to resolve the dispute between the parties is determining what, if any, additional structure "tree portion" requires with respect to the relationship between the branches and the trunk portion and, perhaps, the lights and the branches. Even if "tree portion" imparts some sense of modularity into the claim, the claim, itself, in the language following "tree portion," defines how the branches that are recited as being "includ[ed]" as an element of the "tree portion" are associated with respect to the trunk portions that are also recited as being "includ[ed]" as an element of the "tree portion" (i.e., the branches are "joined" to the trunk portion (claims 1, 10, and 20) or are "attached" (claim 28)) and, as discussed further below, Patent Owner contends that the preamble imposes its own limitations related to how the light strings are secured on the branches.

Accordingly, "tree portion" does not require express construction because the dispute concerning "tree portion" is resolved with the

construction of "joined" (claims 1, 10, and 20) and "attached" (claim 28), discussed below.

b. "joined" and "attached"

Claims 1, 10, and 20 each recite that the "branches [are] joined to the . . . trunk portion[s]," while claim 28 requires "branches attached to the . . . trunk portion."

Patent Owner contends "the broadest reasonable interpretation of the word 'joined' as used in the claims is 'affixed, secured, attached, or connected.'" PO Resp. 49. Patent Owner suggests that this relationship between the branches and the trunk portion is met with a "snug fit, latch, pin, [or] hinge." *Id.* at 50. Patent Owner contends that the meaning of "attached" "is narrower than 'joined' and the broadest reasonable interpretation of the word 'attached' as used in Claim 28 is 'fixedly or semi-permanently attached, fastened, or secured.'" *Id.* at 54.

i. "joined"

As noted above, one example Patent Owner provides as meeting its construction of "joined" is a "snug fit." *Id.* at 50. Because I agree that Miller teaches, or at least suggests, such a "snug fit," as discussed further below, I do not need to further construe "joined" in order to resolve the dispute before us. *Vivid Techs., Inc. v. Am. Sci. & Eng'g, Inc.*, 200 F.3d 795, 803 (Fed. Cir. 1999) (Only those terms that are in controversy need to be construed, and only to the extent necessary to resolve the controversy.).

ii. "attached"

The record does not support a meaning of "attached" that is narrower than that for "joined," and Patent Owner proposes a construction of "joined" using the term "attached." PO Resp. 50 ("the broadest reasonable

interpretation of the word 'joined' as used in the claims is . . . attached"). Patent Owner attempts to further define "attached" as "fixedly or semi-permanently *attached*," which is not helpful. *Id.* at 54. Patent Owner also uses the terms "fastened" and "secured" to define "attached." Patent Owner contends that "[t]his definition is supported by the specification, which discloses modular tree portions. *See supra*, Part III & VI(A) & VII(D)(1) (incorporated herein)" without discussing anything specifically related to the term "attached." *Id.* at 54. Upon review of the Specification, I see nothing that imparts any special meaning to the word "attached."

Further, I agree with Petitioner that "attached" is synonymous with "joined." *See* Pet. Reply 22–23 (citing, *e.g.*, Ex. 1125, 3). Page 3 of Exhibit 1125 is a dictionary excerpt defining "attach" as "to fasten, secure, or *join*" (emphasis added). Moreover, as noted above, Patent Owner's own construction of "joined" confirms this understanding, defining that term as "attached." PO Resp. 50.

Accordingly, I determine that "attached" is synonymous with "joined," and also includes a "snug fit," as set forth by Patent Owner with respect to the term "joined."

c. "lighted artificial tree" (preamble)

The preamble of each of the challenged claims recites "lighted artificial tree." The body of each claim recites various portions of an artificial tree and lights on those portions. The dispute with respect to this term is somewhat unclear.

Patent Owner contends that this preamble imparts a requirement of "a 'tree with lighting integral to the construction'"–a "pre-lit tree." PO Resp. 55. Patent Owner contends that "[t]he '186 is such a pre-lit tree, as indicated

in the title, the figures, and throughout the specification." *Id.* Many of the claims recite, in the body of those claims, "light string[s]" electrically connectable to, or connected to, trunk wiring. Even if I were to accept that "lighted artificial tree" imposed Patent Owner's "pre-lit" concept, that "construction" provides no indication of the additional *structure* required to be considered "a lighted [or pre-lit] tree," and I see no particular additional structure for coupling the light strings to the branches imposed by the preamble of the challenged claims.

Nevertheless, to the extent there is some manner in which the lights must be coupled to trees, Patent Owner appears to concede that lights wound around braches constitute a pre-lit configuration. *See* Tr. 46:1–4 ("anybody working in the Christmas tree field would know that . . . the lights are tightly wound on the branches without clips"). The dispute, therefore, appears to be how tightly the lights must be wound, as Patent Owner acknowledges that Miller includes lights wound around branches, but alleges they are too "loosely wound." *See* PO Resp. 21 ("the light strings of *Miller* are . . . loosely wound on the branches").

Even if the preamble imposed a structural limitation of how the lights are attached (e.g., wound on the branches), it certainly does not impose a requirement of how tightly they must be wound, nor does Patent Owner provide persuasive argument or evidence to support such a position. In fact, an arrangement where the lights are difficult to remove would be contrary to the express disclosure of the '186 patent describing easy replacement. *See* Ex. 1001, 18:47–49 (describing the benefits of its light strings as providing "a user the opportunity to easily disconnect the light string . . . for replacement as needed").

d. "modular . . . artificial tree"

Neither party proposes an express construction for the preamble "modular . . . artificial tree" found in claim 28. The term "modular" does not appear in the body of the claim, and neither party even alleges that term is necessary to understand the claim. Indeed, the claim recites trunk portions, branches, and light strings, as well as how those elements are interrelated and connected to one another. Accordingly, I do not read modular in the preamble of claim 28 as requiring any more structure than that already recited in the body of the claim.

2. *Challenges*

Trial was instituted based on Petitioner's challenges to claims 1, 3, 4, 6–11, 15–22, 25, 26, and 28 based on Petitioner's challenges applying various combinations of Miller, Otto, Jumo, Pan, Lessner, Janning, and Yang. As discussed below, in some instances, the challenges were based solely on Miller, and included *possible* combinations with other references *depending* on how a particular claim limitation was ultimately interpreted by the Board. Patent Owner responds only to some of those challenges and, likewise, the majority addresses only some of those challenges. The Decisions on Institution, however, did not distinguish, in any meaningful way, a subset of challenges it considered unpersuasive.

a. References Required for Challenges

Petitioner presents its challenge to claims 1, 10, and 20, for example, as being based solely on Miller, based on a combination of Miller and Otto, or based on a combination of Miller, Otto, and Jumo. This is laid out in the Petition, as Petitioner explains that Otto is cited for additional teachings if needed by a more limited reading of the claims, and Jumo is cited for even

further details if further additional limitations were read into the claims. *See* Pet. I 19 ("*Miller* arguably teaches every element of Claims 1, 10, and 20"); *id.* at 20 ("*Miller*'s plug and socket connectors are unconstrained within the hollow trunk sections 3, 5 and are therefore free to rotate within the trunk, enabling an electrical connection independent of rotational orientation" and using Otto as an alternate teaching of specific coaxial connectors if necessary to satisfy variations in claim construction); *id.* at 21 ("Patent Owner may allege that *Miller-Otto* does not provide express details regarding the claimed features of the connectors," and in order to counter potential arguments, noting that "any claimed features not expressly found were well known in the prior art, e.g., as explicitly taught in *Jumo*.").

The Institution Decision for IPR2016-00800, for example, acknowledges that "Petitioner asserts that Miller describes most of the elements of claims 1, 10, and 20 with the *possible* exception of the recited connection between the tree trunk elements." IPR2016-00800, Paper 9, 9–10 (emphasis added) (citing Pet. I 19–20). That decision addresses Patent Owner's Preliminary Response to the challenges without taking any position whatsoever with respect to whether or not Miller teaches the connection features in claim 1. This is understandable because, as noted above, Otto and Jumo were cited for further details of electrical connectors, and claim 1 is virtually silent as to any details on those features.

b. Discussion

The discussion of claim 1 is sufficient to illustrate my position relative to that of the majority. I discuss specifically only those issues required to explain my disagreement with the position taken by the majority. As for the remaining limitations of claim 1 not expressly discussed, I am persuaded by

Petitioner's contentions that Miller, itself, teaches, or at least suggests, each limitation of claim 1. *See* Pet. I 19–20, 41–50.

As noted above, Petitioner makes clear, and I agree, that its challenge to claim 1 does not require Otto or Jumo, as they are merely back-up evidence for potential claim interpretations that never materialized.[42] Looking to Petitioner's mapping of Miller's elements to the features recited in claim 1, and the comparison of Miller's disclosure relative to the '186 patent, as discussed above, it is difficult to discern any appreciable difference between Miller's tree and that required by the claim. Pet. I 19–20, 45–50. This is made clear by Patent Owner's failure to even address the majority of Petitioner's contentions.[43] I find Petitioner's mapping and discussion of evidence persuasive. I address specifically Patent Owner's limited response to those contentions.

With respect to claim 1, Patent Owner responds that Miller's branches are not "joined" to its trunk member (PO Resp. 78–79), Miller does not teach the light string arrangement required by the claim (*id.* at 79–81), and Miller does not teach a "tree portion" (*id.* at 81–82).[44]

---

[42] Patent Owner does not allege any deficiency in Miller's teachings relative to the trunk portions or electrical connectors of claim 1. Therefore, Petitioner's challenge to claim 1 can be decided solely based on the asserted teachings of Miller, obviating Patent Owner's arguments directed to Jumo allegedly being non-analogous art or alleged deficiencies in rationale to combine Jumo's teachings with those of Miller.

[43] It is worth noting that Patent Owner does not dispute that Miller teaches a trunk portion and electrical connectors that satisfy whatever additional structure, beyond that specifically recited in the claim, might be required by the recitation of "tree portion" in claim 1.

[44] Although Patent Owner also contends that Miller is non-analogous art, I note that the majority does not appear to accept that argument. Without

i. "joined" branches

Claim 1 requires "branches joined to . . . trunk portion[s]." Patent Owner relies on its construction of "joined" to distinguish claim 1 from Miller's tree, contending that "[a]s described above, a POSA would understand from this disclosure that 'joined' branches include branches that are 'permanently or semi-permanently affixed, secured, attached, or connected.'" PO Resp. 78. This is not persuasive because *this is not the construction that Patent Owner set forth* in its discussion of "joined." In fact, this assertion is confusing because Patent Owner clearly states that "joined" is something less than even semi-permanent attachment. *See id.* at 54 (explaining that "'attached' . . . is narrower than 'joined,'" meaning that "joined" is broader than even "semi-permanently attached").

As explained above in the claim construction discussion, and as Patent Owner agrees, branches "joined" to trunk portions is met by a "snug fit." The dispute here centers on whether a "snug fit" is provided in Miller. Patent Owner contends there is no "snug fit," while Petitioner contends there is a "snug fit." PO Resp. 49–50, 78–79; Pet. Reply 43–44 (disagreeing with Patent Owner's characterization, noting that "nothing in *Miller*'s teachings suggests its branches can 'simply fall out'" and "*Miller*'s FIG. 3 shows minimal space between limbs 10 and sockets 8, suggesting the opposite of *Miller*'s branches being readily removable or liable to just fall out").

---

specifically addressing that argument, I note that I would find Miller to be in the same field of endeavor as the '186 patent, even within the field of endeavor defined by the majority above (i.e., "artificial trees with decorative lighting").

It is not difficult to look at the disclosure of Miller and immediately understand that it teaches a "snug fit" between its limbs 10 and trunk portion, or at the very least suggests the use of a "snug fit" when attaching its branches. In its challenge, Petitioner identifies specifically Miller's Figure 2 and corresponding description of how the branches are related to the trunk of its tree. Pet. I 28, 31, 45–46 (citing Ex. 1007, 2:3–18, 2:61–65, Fig. 2). Figure 3 of Miller is reproduced below for reference, as that figure is an enlarged view of the relevant portion of Figure 2.

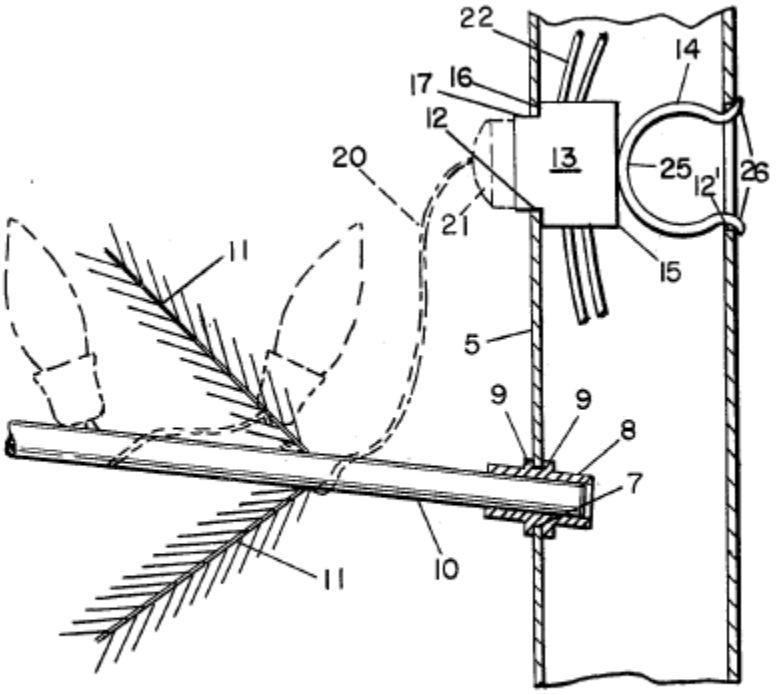

FIG.3

Figure 3 "is an enlarged view [of Figure 2], partly in section, of a trunk member, showing . . . a limb socket and limb therein." Ex. 1007, 1:41–45.

The relevant portion of Miller cited by Petitioner explains that "trunk members 3 and 5 . . . receive cylindrical limb sockets 8 . . . with spaced

annular flanges 9 on each of the sockets snugly embracing the rim of each aperture." Ex. 1007, 2:3–7. Sockets 8 are each formed "of some suitable flexible material, such as rubber or plastic" and "[a]rtificial limbs 10 having branches 11 . . . are sleeved within each of the apertures 7." Ex. 1007, 2:8–18. Miller's Figures 2 and 3, and the accompanying discussion quoted above, clearly teach, or at least suggest, a "snug fit" between limb 10/branch 11 and trunk members 3, 5. Based on the above discussion, I would find that Miller teaches such an arrangement. In the event there is any room for debate on the issue, I would further find that the above discussion and Figures from Miller at least suggests such an arrangement, as sockets 8 are described as being formed from a flexible rubber material.

ii. "light string"

Claim 1 recites "a first light string" and a "first trunk wiring assembly electrically connectable to the first light string," as well as "a second light string" and a "second trunk wiring assembly electrically connectable to the second lighting string." Petitioner cites Miller's strings of miniature lights 20 (shown in Figures 2 and 3) as teaching this limitation. Pet. I 28–29, 31, 45–46 (citing Ex. 1007, 2:28–33, 2:65–3:10, Figs. 2–3).

Patent Owner does not dispute that a "light string" simply requires "a string of lights that can be positioned over a plurality of branches." PO Resp. 57. Nevertheless, Patent Owner responds that "[e]ven if *Miller* disclosed a tree portion comprised of a trunk with 'joined' branches . . . *Miller* does not disclose, teach, or suggest that a light string is connected, in any way, to the trunk section or the branches until after the artificial tree of *Miller* has been fully assembled." PO Resp. 80. It appears that, perhaps, although not explicitly stated, Patent Owner is arguing the claim has a light

string connected to the trunk section and/or the branches before the tree is fully assembled due to the preamble recitation of "lighted artificial tree." *See* PO Resp. 54–56. Although I do not agree with Patent Owner's construction, it would not change the result.

The fact that lights may be assembled on the tree after two trunk portions are connected does not distinguish Miller's disclosed structure from the claimed arrangement. I see no missing structure.

Patent Owner further contends that "[i]n addition, nowhere does *Miller* suggest to a POSA that each portion includes its own light string," rather, "*Miller* merely discloses that a light string may be added or replaced to an entire tree; providing no relation to modular tree portions with pre-fabricated light strings." *Id.* at 81 (citing Ex. 1001, 2:42–44, 48–50). Figure 2 of Miller simply does not support the conclusion advanced by Patent Owner. An annotated version of Miller's Figure 2 is provided below, very clearly illustrating first and second light strings in Miller.

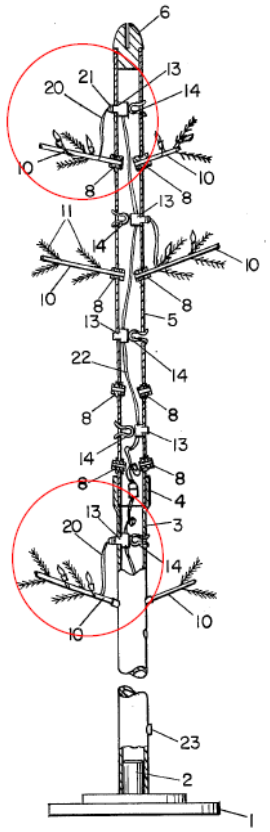

FIG. 2

The figure reproduced above is Figure 2 of Miller, which is a front, partial section, view of its artificial tree, and includes annotations clearly circling the first and second light strings. Ex. 1007, 1:38–40.

I would find that Miller teaches two light strings (each of the circled light strings 20) because they are each plugged separately into a respective electrical connector 13.

iii. "tree portion"

Claim 1 recites a "first tree portion" and a "second tree portion." Patent Owner provides little argument directed to the "tree portion" recited in the claim, other than "a tree portion is a modular, unified part of a tree," which "is not disclosed by *Miller*, and thus these claim limitations are not taught by the asserted references." PO Resp. 82. As discussed above

relative to claim construction, the arguments directed to "tree portion" appear to be based on alleged deficiencies in how Miller's branches and lights are attached to a tree, rather than any other particular feature (i.e., any other missing claimed *structure*).

As to any alleged structural requirements, the above discussion regarding claim construction and the teachings of Miller relative to the "joined" branches and light strings addresses sufficiently Patent Owner's contentions in connection with "tree portion."

iv. Otto/Jumo

The majority asserts that Otto and Jumo are required for each of Petitioner's challenges. *See* Maj. Op. 35–42. At most, Otto may be required for some of the claims.

Nevertheless, even if Otto and Jumo references were required in the challenges, as the majority asserts, I am persuaded by Petitioner's contentions that one skilled in the art would have found their combination with Miller's teachings obvious, including those in connection with Jumo being analogous art and the rationale proposed by Petitioner.

To the extent the majority faults Otto for lack of specificity, I note the alleged missing details in Otto are not in dispute. For example, the majority reasons that "[t]he problem here is that Petitioner identifies in Otto no structure for this electrical-mechanical trunk connection" (Maj. Op. 41–42), but doesn't identify what description is missing in Otto. Patent Owner does not even allege this detail is missing, and in a related proceeding, appears to believe Otto discloses the structure for its electrical-mechanical trunk connection. *See, e.g.*, IPR2016-00334, Paper 1, 57–63.

As for Jumo, Petitioner simply cites those teachings to remedy any of those alleged missing details in Otto, explaining that Jumo is provided as evidence that specific details of connectors, like those in Otto, "were well known in the prior art, e.g., as explicitly taught in *Jumo*" and that Jumo is "a similar mechanical and electrical connection system to that of *Otto*." Pet. I 21. Moreover, the majority does not identify any details allegedly missing from the Miller/Otto combination that would require Jumo.

C. Conclusion

Even accepting the majority's discussion of secondary considerations, and notwithstanding the various motions to exclude, I would determine that the evidence of unpatentability outweighs the evidence of patentability. For example, with respect to claim 1, Miller teaches, or at least suggests, each limitation by itself. The challenges to the other claims are similarly strong, outweighing even strong evidence of non-obviousness.

For at least the reasons set forth above, and based on my review of the record, I do not join the majority decision, and respectfully *dissent*.

PETITIONER:

Christopher Forstner
Ryan Schneider
Alexis Simpson
Robert Angle
TROUTMAN SANDERS LLP
Chria.forstner@troutmansanders.com
Paul.mcgowan@troutmansanders.com
ryan.schneider@troutmansanders.com
alexis.simpson@troutmansanders.com
robert.angle@troutmansanders.com

Jason Eisenberg
STERNE, KESSLER, GOLDSTEIN & FOX PLLC
jasone-ptab@skgf.com

PATENT OWNER:

Lukas Toft
Larina Alton
FOX ROTHSCHILD LLP
ltoft@foxrothschild.com
laton@foxrothschild.com

Doug Christensen
CHRISTENSEND FONDER DARDI
christensen@cfpatlaw.com