Trials@uspto.gov
571.272.7822

Paper No. 96
Entered: February 26, 2018

UNITED STATES PATENT AND TRADEMARK OFFICE

BEFORE THE PATENT TRIAL AND APPEAL BOARD

POLYGROUP LIMITED (MCO),
Petitioner,

v.

WILLIS ELECTRIC CO., LTD.,
Patent Owner.

Cases IPR2016-01615, IPR2016-01616, and IPR2016-01617
Patent 8,936,379 B1

Before WILLIAM V. SAINDON, JEREMY M. PLENZLER, and BARBARA A. PARVIS, *Administrative Patent Judges*.

PARVIS, *Administrative Patent Judge*, for the Board.
PLENZLER, *Administrative Patent Judge*, dissenting.

FINAL WRITTEN DECISION
Finding No Challenged Claims Unpatentable
Dismissing Patent Owner's Motions to Amend as Moot
Denying Patent Owner's Motions to Exclude
35 U.S.C. § 318(a) and 37 C.F.R. § 42.73

I. INTRODUCTION

Polygroup Limited (MCO) ("Petitioner") requested an *inter partes* review of claims 1–6, 8, 10–17, 28, 29, and 32 ("challenged claims") of U.S. Patent No. 8,936,379 B1 (*see, e.g.*, IPR2016-01615, Ex. 1001, "the '379 patent")[1] in a series of three Petitions. IPR2016-01615, Paper 2 ("1615 Pet."); IPR2016-01616, Paper 2 ("1616 Pet."); IPR2016-01617, Paper 2 ("1617 Pet."). In support of its each of its Petitions, Petitioner offers a Declaration of Mr. Mike Wood, who has been retained as an expert witness in each of the instant proceedings. IPR2016-01615, Ex. 1003 ("1615 Ex. 1003") ¶ 1; IPR2016-01616, Ex. 1003 ("1616 Ex. 1003") ¶ 1; IPR2016-01617, Ex. 1003 ("1617 Ex. 1003") ¶ 1.[2] Willis Electric Company, Limited ("Patent Owner") filed Preliminary Responses to each of the Petitions. IPR2016-01615, Paper 5 ("1615 Prelim. Resp."); IPR2016-01616, Paper 5 ("1616 Prelim. Resp."); IPR2016-01617, Paper 5 ("1617 Prelim. Resp."). In support of each of its Preliminary Responses, Patent Owner offered a Declaration of Dr. Stuart Brown, who has been retained as an expert witness in each of the instant proceedings. IPR2016-01615, Ex. 2001 ("1615 Ex. 2001") ¶ 1; IPR2016-01616, Ex. 2001 ("1616 Ex. 2001") ¶ 2; IPR2016-

---

[1] The '379 Patent also was filed as Exhibit 1001 in IPR2016-01616 and IPR2016-01617 and will be referred to as "Exhibit 1001" or "Ex. 1001" throughout.

[2] Except as otherwise noted herein, we refer to each of the exhibits filed by Petitioner using an abbreviated format including only the four digit proceeding number of the proceeding the exhibit was filed in (i.e., 1615, 1616, or 1617) prior to "Exhibit" or "Ex.," such as "1615 Exhibit 1003" and "1615 Ex. 1003." In subsequent citations, we do not include the full proceeding number prior to the Exhibit number, but instead use only the aforementioned abbreviated format.

01617, Ex. 2001 ("1617 Ex. 2001") ¶ 1.[3] Upon consideration of the parties' contentions and supporting evidence, we instituted an *inter partes* review pursuant to 35 U.S.C. § 314, as to the challenged claims of the '379 Patent. IPR2016-01615, Paper 16 ("1615 Dec."); IPR2016-01616, Paper 15 ("1616 Dec."); IPR2016-01617, Paper 16 ("1617 Dec.").

After institution, Patent Owner filed a Patent Owner Response in each of the instant proceedings. IPR2016-01615, Paper 32 ("1615 PO Resp."); IPR2016-01616, Paper 31 ("1616 PO Resp."); IPR2016-01617, Paper 33 ("1617 PO Resp."). Patent Owner offers additional Declarations of Dr. Brown in support of its Patent Owner Responses. 1615 Ex. 2047; 1616, Ex. 2045; 1617 Ex. 2045. Petitioner filed a Reply in each of the instant proceedings. IPR2016-01615, Paper 47 ("1615 Pet. Reply"); IPR2016-01616, Paper 47 ("1616 Pet. Reply"); IPR2016-01617, Paper 50 ("1617 Pet. Reply"). Petitioner offers additional Declarations of Mr. Mike Wood in support of its Replies. 1615 Ex. 1100; 1616, Ex. 1100; 1617 Ex. 1100.

Patent Owner also timely filed a Motion to Amend in each of the proceedings. On October 12, 2017, a conference call was held to give the parties an opportunity to discuss the Federal Circuit's en banc decision in *Aqua Prods., Inc. v. Matal*, 872 F.3d 1290 (Fed. Cir. 2017) ("*Aqua Products*"). On October 25, 2017, we issued an Order in each of the

[3] We refer to each of the other exhibits filed by Patent Owner using an abbreviated format including only the four digit proceeding number of the proceeding the exhibit was filed in (i.e., 1615, 1616, or 1617) prior to "Exhibit" or "Ex.," such as "1615 Exhibit 2001" and "1615 Ex. 2001." In subsequent citations, we do not include the full proceeding number prior to the Exhibit number, but instead use only the aforementioned abbreviated format.

proceedings authorizing Patent Owner to file Revised Substitute Claims, authorizing additional briefing, and also modifying the Scheduling Order. *See, e.g.*, IPR2016-01615, Paper 61. On November 1, 2017, Patent Owner filed a revised Motion to Amend in each of the proceedings. *See, e.g.*, IPR2016-01615, Paper 64 ("1615 MTA"). The parties filed additional papers and submitted evidence in support of an opposition to the Motions to Amend, which are discussed to the extent necessary *infra* in Section III below.

The parties also filed additional motions, which are discussed *infra* in Section III. A transcript of the hearing held on December 15, 2017 has been entered into the record of each proceeding. *See, e.g.*, IPR2016-01615, Paper 90 ("1615 Tr.").[4]

We have jurisdiction under 35 U.S.C. § 6. The evidentiary standard is a preponderance of the evidence. *See* 35 U.S.C. § 316(e); 37 C.F.R. § 42.1(d). This Final Written Decision is entered pursuant to 35 U.S.C. § 318(a) and 37 C.F.R. § 42.73. Because the subject matter of the claims and the challenges significantly overlap, we enter this one Final Written Decision in the three proceedings, i.e., IPR2016-01615, IPR2016-01616, and IPR2016-01617. For the reasons that follow, we determine that Petitioner has not demonstrated by a preponderance of evidence that the challenged claims of the '379 Patent are unpatentable. Additionally, we dismiss each of Patent Owner's Motions to Amend as moot.

---

[4] The oral hearings were consolidated in Cases IPR2016-01610, -1612, -1613, -1615, -1616, and -1617. *See, e.g.*, 1615 Tr. 3:8–12.

A. Related Matters

Both parties have asserted patents and have filed petitions against the other party. The ’379 patent has been asserted against Petitioner in *Willis Elec. Co. v. Polygroup Ltd*., No. 0:15-cv-03443-DWF-SER (D. Minn. (filed Aug. 28, 2015)). Pet. 73; Paper 4, 1–2. Petitioner has filed other petitions challenging Patent Owner’s patents containing similar subject matter and which were also asserted against Petitioner. For instance, Petitioner also filed petitions requesting *inter partes* review of U.S. Patent No. 8,454,186 (IPR2016-00800, IPR2016-01609, IPR2016-01610); U.S. Patent No. 8,454,187 (IPR2016-00801, IPR2016-01611, IPR2016-01612); and U.S. Patent No. 9,044,056 (IPR2016-00802, IPR2016-01613). *Id.* Petitioner also filed petitions requesting *inter partes* review for U.S. Patent Nos. 9,066,617 (IPR2016-01783) and 8,974,072 (IPR2016-01781, IPR2016-01782).[5]

An anonymous party previously filed ex parte reexaminations (90/020,073 and -074) against the ’186 and ’187 Patents, respectively. Pet. 73; Paper 4, 1–2.

Petitioner has asserted patents against Patent Owner in *Polygroup Macau Ltd (BVI) v. Willis Electric Co., Ltd.*, No. 3:15-cv-00552 (W.D.N.C.). Paper 4, 1–2. Patent Owner has filed petitions challenging U.S. Patent Nos. 8,863,416, 6,794,825, 9,119,495, and 8,959,810, owned by Petitioner, in IPR2017-00309, IPR2017-00330, IPR2017-00331, IPR2017-00334, and IPR2017-00335.

---

[5] We refer to the related proceedings as 1610 IPR, 1612 IPR, 1613 IPR, and 1783 IPR, and we refer to papers submitted in those proceedings using the same numerical *inter partes* review identifier, *e.g.*, “1610 Petition” or “1610 Pet.”

B. The ’379 Patent

The ’379 patent is directed to a modular lighted artificial tree (e.g., a Christmas tree). Ex. 1001, (54). An electrical connection runs up the trunk of the tree to provide a source of electricity for light strings draped over the branches. *See id.* at Figs. 2–4. Physically connecting the trunk sections during assembly of the tree also electrically connects the trunk sections. *Id.* at (57), Fig. 4.

C. Challenged Claims

Petitioner challenges claims 1–6, 8, 10–17, 28, 29, and 32. Of the challenged claims, claims 1, 5, and 28 are the only independent claims. Claims 2–4, 6, 8, 10–17, 29, and 32 depend, directly or indirectly, from independent claims 1, 5, or 32. Claims 1 and 5 are illustrative and are reproduced below.

> 1. A modular artificial tree, comprising:
>
> a first trunk portion having a first elongated trunk body defining a first cavity for receiving a first wiring harness including a first electrical wire and a second electrical wire;
>
> a second trunk portion having a second elongated trunk body defining a second cavity for receiving a second wiring harness including a first electrical wire and a second electrical wire;
>
> a first trunk connector insertable into the first trunk body along a central vertical axis, and securable to the first trunk body in at least four rotational alignment positions about the central vertical axis, including at a final insertion position, the first trunk connector being entirely located within the first cavity at the final insertion position[;]
>
> a first electrical contact set including a first electrical contact and a second electrical contact engaged with the first trunk connector and electrically connected to the first electrical

wire and the second electrical wire of the first wiring harness, respectively;

a second trunk connector insertable into the second trunk body along the central vertical axis, and securable to the second trunk body in at least four rotational alignment positions about the central vertical axis, including at a final insertion position;

a second electrical contact set including a first electrical contact and a second electrical contact engaged with the second trunk connector and electrically connected to the first electrical wire and the second electrical wire of the second wiring harness, respectively; and

wherein connecting the first and second trunk portions causes the first electrical contact set to be electrically connected to the second electrical contact set.

Ex. 1001, 23:63–24:30.

5. A lighted modular artificial tree, comprising:

a first tree section including a first elongated trunk defining a vertical axis, a plurality of branches coupled to the first trunk, and a first plurality of lights, the first elongated trunk enclosing a first wiring harness configured to supply power to the first plurality of lights;

a second tree section including a second elongated trunk, a plurality of branches coupled to the second trunk, and a second plurality of lights, the second elongated trunk housing a second wiring harness;

a connector assembly configured to connect the first tree section to the second tree section along the vertical axis, the connector assembly including a first trunk connector located at least partially within the first trunk, a second trunk connector located at least partially within the second trunk, a first pair of electrical contacts electrically connectable to a second pair of electrical contacts;

a top tree section including a vertically extending top portion, a plurality of branches coupled to the top portion, and a third plurality of lights, and

a top connector connecting the top tree section to the second tree section and including:

a top connector body having a first portion insertable into the second trunk, a flanged portion coupled to the first portion, and a receiving port for receiving a portion of the vertically extending top portion, and

wherein the first plurality of lights are electrically connected to the second plurality of lights through the connector assembly, and the second plurality of lights are electrically connected to the third plurality of lights and,

wherein the flanged portion of the top connector body is outside the second trunk body and abutting a top edge of the second trunk portion.

Ex. 1001, 24:51–25:16.

D. Prior Art and Asserted Grounds

Petitioner asserts that the challenged claims of the ’379 patent are unpatentable, under 35 U.S.C. § 103(a), on the following grounds:

References	**Claim(s) Challenged**
DeVicaris[6] and Korengold[7]	1, 2, 6, and 12
DeVicaris, Korengold, and Raymond[8]	3
DeVicaris, Korengold, and Yang[9]	4

[6] U.S. Patent No. 4,072,857 (issued Feb. 7, 1978) (Ex. 1004). DeVicaris was filed as Exhibit 1004 in each of IPR2016-01615, -01616, and -01617.
[7] U.S. Patent No. 2,229,211 (issued Jan. 21, 1941) (1615 Ex. 1005). Korengold was filed as Exhibit 1005 in each of IPR2016-01615, -01616, and -01617.
[8] U.S. Patent No. 3,234,073 (issued Feb. 8, 1966) (Ex. 1007). Raymond was filed as Exhibit 1007 in each of IPR2016-01615, -01616, and -01617.
[9] U.S. Patent No. 7,132,139 B2 (issued Nov. 7, 2006) (Ex. 1015). Yang was

References	**Claim(s) Challenged**
DeVicaris, Korengold, and Lessner[10]	8, 13, 14, 29, and 32
Hicks,[11] DeVicaris, and Raymond	5 and 10
Hicks, DeVicaris, Raymond, and Lessner	11 and 16
Hicks, DeVicaris, Raymond, and Korengold	15 and 17
DeVicaris and Lessner	28

Petitioner also relies on the Declaration of Mike Wood (1615 Ex. 1003; 1616 Ex. 1003; 1617 Ex. 1003), who testifies that he is an expert in electrical engineering as it relates to lighting manufacturing and design (*see, e.g.*, 1615 Ex. 1003 ¶ 12).

II. ANALYSIS

A. Claim Construction

Our analysis of the parties' contentions and evidence regarding the broadest reasonable interpretation of the terms "modular artificial tree" and "interference fit," pertain to claims challenged in each of the instant proceedings. For expediency, we refer only to the parties' contentions in IPR2016-01615. Similar contentions, however, were presented in the other proceedings, unless otherwise noted.

---

filed as Exhibit 1015 in each of IPR2016-01615, -01616, and -01617.
[10] U.S. Patent No. 3,409,867 (issued Nov. 5, 1968) (Ex. 1008). Lessner was filed as Exhibit 1008 in each of IPR2016-01615, -01616, and -01617.
[11] U.S. Patent Application No. 2007/0230174 (published Oct. 4, 2007) (Ex. 1006). Hicks was filed as Exhibit 1006 in each of IPR2016-01615, 01616, and -01617.

Furthermore, our decision in the instant proceeding regarding the broadest reasonable interpretation of the claim terms is consistent with the decisions regarding the broadest reasonable interpretation of the same or similar claim terms in other proceedings, i.e., IPR2016-01610, IPR2016-01612, and IPR2016-01613. Both parties' agree that the patents challenged in the IPR2016-01610, IPR2016-01612, and IPR2016-01613 are related and having similar specifications to the '379 Patent. *See, e.g.*, 1615 Tr. 35: 19–21 ("These specifications are so similar.")

1. Legal Standard

In an *inter partes* review, we construe claim terms in an unexpired patent according to their broadest reasonable construction in light of the specification of the patent in which they appear. 37 C.F.R. § 42.100(b). Under this standard, claim terms are presumed to have their ordinary and customary meaning, as understood by a person of ordinary skill in the art in the context of the entire disclosure. *See In re Translogic Tech., Inc.*, 504 F.3d 1249, 1257 (Fed. Cir. 2007). Any special definition for a claim term must be set forth in the specification with reasonable clarity, deliberateness, and precision. *See In re Paulsen*, 30 F.3d 1475, 1480 (Fed. Cir. 1994).

2. "modular artificial tree"
(Independent Claims 1, 5, 28)[12]

The Petition does not include contentions regarding the broadest reasonable interpretation of "modular artificial tree." 1615 Pet. 15–18. The

[12] Patent Owner raises interpretation of "modular artificial tree" in its Reponses filed in IPR2016-01615 and IPR2016-01617, but not in its

Petition includes contentions regarding how the asserted prior art teaches "[a] modular artificial tree" recited in the preamble and Petitioner does not contend, in the Petition, that the preamble is not limiting. *Id.* at 15–18, 22–23.

Patent Owner raises the issue of the construction of "modular artificial tree" in its Response. 1615 PO Resp. 14–15. Patent Owner proposes a "modular artificial tree" means "a tree constructed of modular portions, each modular portion being a separate tree section." *Id.* at 14 (citing 1615 Ex. 2047 ¶¶ 53, 73) (emphasis removed). Petitioner replies that "modular artificial tree" is recited only in the preambles of the claims, which should be considered to be non-limiting. 1615 Pet. Reply 7–8. Petitioner also contends, in the alternative, "modular artificial tree" means "an artificial tree with elements capable of being easily joined or arranged with other parts or units." *Id.* at 9 (citing Ex. 1100 ¶ 24).

Patent Owner refers to our Decision Denying Institution involving a related patent in support of its contentions. *See* 1615 PO Resp. 21 (citing IPR2016-01783, Paper 15 ("1783 Dec."), 2). In the 1783 Decision Denying Institution, we explained that we were not persuaded by Petitioner's contentions that the preambles of the independent claims are not limiting, but, instead, we were persuaded by Patent Owner that the "artificial tree assembly" element in the preamble provides necessary context at least for the term "trunk portion." 1783 Dec. 8. In particular, we explained that the

---

Response filed in IPR2016-01616. Claim 5 of the '379 Patent challenged in IPR2016-01616, however, recites "lighted *modular artificial tree*" in its preamble (Ex. 1001, 24:51), which includes the same "modular artificial tree" recitation in the preambles of claims 1 and 28 (*id.* at 23:63, 28:1).

recitation of "artificial tree assembly, comprising" in the preamble of each of independent claims provides necessary context that the term "trunk" in the body of the claim is part of that artificial tree, and not, for example, a piece of luggage. *Id.*

Based on the complete record in the instant proceeding, we similarly are persuaded that recitation of "modular artificial tree" in the preambles of the independent claims provides necessary context at least for the terms "trunk portion" and "tree section," and how they interface with each other, as recited in the challenged independent claims. That an artificial tree is "modular" tells a person of ordinary skill in the art something about the way the tree is structurally configured and arranged—the tree has "separable, modular tree portions mechanically and electrically connectable between trunk portions." Ex. 1001, 1:15–18; *see also id.* at 2:39–44; 6:20–28. In context, reciting that the tree is "modular" means that the tree has this multiple tree portion assembly. The body of claim 1, as well as the other independent challenged claims, is not structurally complete because the term "modular" in the preamble further defines and limits the structure in the body of the claim to have modules forming a tree—the trunk, branch, and light connections must be structurally configured and arranged as modular portions. *See Catalina Mktg. Int'l, Inc. v. CoolSavings.com, Inc.*, 289 F.3d 801, 808–809 (Fed. Cir. 2002) (listing various "guideposts" to review when considering if a preamble is limiting). Likewise, the preamble is more than a description of the structure recited in the body and is not an intended use or purpose. *See id; see also Deere & Co. v. Bush Hog, LLC*, 703 F.3d 1349, 1358 (Fed. Cir. 2012) (finding preamble phrase "rotary cutter deck" "informs one of skill in the art as to the structure required by the claim" and

the "specification," "title of the patent," "summary of the invention," and drawings "describe the invention as a deck for a rotary cutter."); *Poly-Am., LP v. GSE Lining Tech., Inc.*, 383 F.3d 1303, 1310 (Fed. Cir. 2004) (finding the preamble phrase "blown-film" "is a limitation of the claims" based on the "title of the patent" the "[s]ummary of the [i]nvention," and the "specification.")

Upon review of the claims and the '379 Patent Specification, we determine that Patent Owner's contentions regarding the preamble are consistent with the disclosure of the '379 Patent describing the invention as directed to modular artificial trees having tree sections. *See generally* Ex. 1001. For instance, the '379 Patent Specification is entitled "MODULAR LIGHTED TREE." *Id.* [54]. The '379 Patent Specification describes that "*the present invention is directed to* lighted artificial trees having separable, modular tree portions mechanically and electrically connectable between trunk portions." *Id.* at 1:11–15 (emphasis added); *see also id.* at 2:36–39 ("The present invention is directed to a modular lighted artificial tree that includes a first tree portion that may be mechanically coupled and electrically connected to a second tree portion."). Additionally, in the embodiments described in the '379 Patent Specification, the invention is described with respect to modular artificial trees having tree sections. *See, e.g., id.* at Fig. 1, 6:11–13 (illustrating a front perspective view of a modular, lighted artificial tree), 7:30–34 (describing modular lighted tree 100 as including base portion 102, first lighted tree portion 104, second lighted tree portion 106, and third lighted tree portion 108), 7:53–58 (describing that first lighted tree portion 104 includes first trunk portion 120, multiple branches 122, and one or more first light strings 124, although certain figures, e.g.,

Figure 2 depict parts of the tree with branches and lights removed for illustrative purposes), 9:8–22 (using "tree section" interchangeably with "tree portion").[13]

We turn to the parties' contentions regarding the meaning of "modular artificial tree." In particular, relying on the testimony of Dr. Brown, Patent Owner proposes a "modular artificial tree" means "a tree constructed of modular portions, each modular portion being a separate tree section." 1615 PO Resp. 14 (citing 1615 Ex. 2047 ¶¶ 53, 73) (emphasis removed). Relying on the testimony of Mr. Wood, Petitioner contends that "modular artificial tree" means "an artificial tree with elements capable of being easily joined or arranged with other parts or units." 1615 Pet. Reply 9 (citing Ex. 1100 ¶ 24).

Dr. Brown testifies:

> The '379 patent is directed to an improvement in lighted artificial tree design that is modular, with preattached light strings, and internal trunk electrical connectors, that will assemble with minimal handling of tree sections. (Ex. 1001, 2:36–5:52.) The mechanical and electrical connections taught by the '379 patent provide for easier assembly of the modular tree design and enhanced reliability of the lighted artificial tree connections.

Ex. 2047 ¶ 26.

Dr. Brown also testifies that Patent Owner's proposed construction is "supported by the specification" and identifies many of the same portions of the '379 Patent Specification describing that the invention of the '379 Patent is directed to a modular artificial tree constructed of modular portions.

---

[13] Additionally, Petitioner refers to "tree portion" and "tree section" interchangeably. *See, e.g.*, Tr. 16:24–25.

Id. ¶ 53. Dr. Brown, additionally, testifies that Patent Owner's proposed construction is "supported by the understanding of a POSA, who is familiar with different types of tree constructions, and in light of the specification would understand a modular artificial tree to be a tree made of separable tree sections that include branches and trunk portions." *Id.* Dr. Brown, more specifically, testifies "[a] POSA recognizes modular" as a "distinct" type of artificial tree with tree sections that come "with branches pre-attached to the trunk" so that assembly is "quick and easy" because "[o]nce the trunk portions are connected, the branches of the tree sections typically fall into place themselves." *Id.* ¶ 73.

Consistent with the contentions in the Petition that "[a] modular artificial tree" recited in the preamble is taught by the asserted prior art (*see, e.g.*, 1615 Pet. 15–18, 22–23), Mr. Wood testifies "[t]he five independent claims of the '379 Patent cover five different inventions relating to a *lighted artificial tree*." Ex. 1003 ¶ 87 (emphasis added). In his Reply Declaration, Mr. Wood testifies "I reiterate that the '379 Patent relates generally to a *lighted artificial tree* having trunk sections that couple and electrically connect." 1615 Ex. 1011 ¶ 9 (emphasis added). Mr. Wood acknowledges "[t]he '379 Patent seeks to describe an artificial tree that addresses problems that consumer experienced when assembling artificial trees with multiple sections and external wiring for lights provided on the tree branches." *Id.* ¶ 10 (citing Ex. 2047 ¶ 58).

In its Reply, Petitioner contends that Patent Owner's "proposed construction of 'modular artificial tree' must be rejected" because claim 1 does not recite "'branches,' a 'plurality of branches,' or 'tree sections.'" 1615 Pet. Reply 8. Petitioner, additionally, contends "[i]n contrast,

independent claim 5 (preamble 'lighted modular artificial tree') expressly includes 'a plurality of branches coupled to the first trunk.'" *Id.* at 8–9. Petitioner's contentions pertain to whether the preamble is limiting. All challenged independent claims are directed to an "artificial *tree*." *See, e.g.*, 1615 Pet. 15–18, 22–23; Ex. 1003 ¶ 87; 1615 Ex. 1011 ¶¶ 9, 11. We find nothing in the record that persuades us that such a tree lacks branches and, instead, consistent with the '379 Patent Specification, we find that modular artificial trees include branches. *See, e.g.*, Ex. 1001, Fig. 1, 6:11–13 (illustrating a front perspective view of a modular, lighted artificial tree), 7:30–34 (describing modular lighted tree 100 as including base portion 102, first lighted tree portion 104, second lighted tree portion 106, and third lighted tree portion 108), 7:53–58 (describing that first lighted tree portion 104 includes first trunk portion 120, multiple branches 122, and one or more first light strings 124, although certain figures, e.g., Figure 2 depict parts of the tree with branches and lights removed for illustrative purposes), 8:53–56 (describing that second lighted tree portion "is similar to lighted tree portion 104" and includes second trunk portion 160, multiple branches 122 and one or more second light strings 162). As is clear in those examples, the module of the modular artificial tree includes, at its core, a trunk portion of the tree and its associated branches.

In reliance on its expert, Petitioner contends "a POSA would have understood the BRI of 'modular artificial tree' to be 'an *artificial tree* with elements capable of being easily joined or arranged with other parts or units.'" Pet. Reply 9 (citing *e.g.*, Ex. 1100 ¶ 24) (emphasis added). Petitioner implicitly acknowledges that "artificial tree" has its known meaning by including "artificial tree" is the proposed construction. *Id.* Mr.

Wood testifies that the file history of the ’379 Patent Specification supports his and Petitioner’s proposed construction because in response to an amendment adding “modular” to the preamble, the Examiner issued a rejection based on Hicks, which has detachable branches. Ex. 1100 ¶ 25 (citing Ex. 1002, 339–48, 422–35; Ex. 1006 ¶ 11). Mr. Wood also testifies that Patent Owner did not dispute the Examiner’s rejection on the basis that Hicks does not disclose a “modular artificial tree.” *Id.* (citing Ex. 1002, 304–23).

We are not persuaded that the Examiner’s initial finding in a non-final office action that Hicks discloses a “modular artificial tree” comprising, for example, “a first tree section” and “a second tree section” precludes a determination in favor of Patent Owner. *See, e.g.*, Ex. 1002, 336, 339, 342–43. We do not find a concession that Hicks discloses a “modular artificial tree,” rather, the file history indicates “Applicant respectfully *traverses* these [the aforementioned] rejections, but in an effort to advance prosecution of the present application, Applicant has amended the claims to *further differentiate* the claimed invention from the cited references.” Ex. 1002, 318 (emphases added). The Examiner then issued a Notice indicating that the claims were allowed because no prior art was found teaching individually, or suggesting in combination, all the features of the claims, as amended. *Id.* at 185–94.

Reading each of claims 1, 5, and 28 in view of the preamble, it is clear, for example, that the limitation requiring “connecting the first and second trunk portions causes the first electrical contact set to be electrically connected to the second electrical contact set,” recited in claim 1, and as

commensurately recited in claims 5 and 28,[14] means the modules in this tree are built around a trunk portion and its associated branches, like the trunk portions discussed with respect to challenged claims in the related ’186 and ’187 Patents. *See* IPR2016-01610, Paper 187 (“1610 Final Dec.”) § III.A. For instance, in order for the user to obtain the benefits described in the ’379 Patent Specification, i.e., to overcome the described deficiencies of the prior art, associated structures (e.g., connectors, branches, lights), must be connected together and arranged in a way that facilitates such a benefit. *Cf. Lindemann Maschinenfabrik GMBH v. Am. Hoist & Derrick Co.*, 730 F.2d 1452, 1459 (Fed. Cir. 1984) (holding, in an anticipation context, that we may not “disregard . . . the part-to-part relationships set forth in the claims and that give the claims their meaning”).[15]

---

[14] Claims 5 and 28 include similar recitations.

Claim 5: “a connector assembly configured to connect the first tree section to the second tree section along the vertical axis, the connector assembly including . . . a first pair of electrical contacts electrically connectable to a second pair of electrical contacts . . . wherein the first plurality of lights are electrically connected to the second plurality of lights through the connector assembly.” Ex. 1001, 24:61–25:12. Claim 5 effectively uses the term “tree section” as it did “tree portion” in the related ’186 and ’187 patents. The “tree section” is then defined as a trunk-branch-light unit in the claim.

Claim 28: “wherein coupling the second trunk portion to the first trunk portion causes the first electrical contact set to be electrically connected to the second electrical contact set.”

[15] The dissent points to contentions in Patent Owner’s Response in IPR2016-01610 for its determination that the connection between branches and trunk portions required by the “modular artificial tree” recitation in the preamble is met by a “snug fit” connection between those parts. The specific contentions of Patent Owner and testimony of Dr. Brown are that the branches must be joined to the trunk portions, not removably sleeved branch

We are persuaded by Patent Owner's contentions and credit Dr. Brown's testimony regarding the understanding that one of ordinary skill in the art would have had of a "modular artificial tree," in light of the '379 Patent Specification. 1615 PO Resp. 14 (citing 1615 Ex. 2047 ¶¶ 53, 73). For instance, we credit and give substantial weight to Dr. Brown's testimony that a person having ordinary skill in the art "recognizes modular" as a "distinct" type of artificial tree with tree sections that come "with branches pre-attached to the trunk" so that assembly is "quick and easy" because "[o]nce the trunk portions are connected, the branches of the tree sections typically fall into place themselves." 1615 Ex. 2047 ¶ 73. Consistent with Patent Owner's contentions and Dr. Brown's testimony, the '379 Patent Specification describes that modular artificial tree of "the present invention" has "*separable, modular tree portions* mechanically and electrically connectable between trunk portions." *Id.* at 1:11–15 (emphasis added); *see also id.* at 2:36–39 ("The present invention is directed to a modular lighted artificial tree that includes a first tree portion that may be mechanically coupled and electrically connected to a second tree portion."), 7:30–34 (discussing the modular nature of the tree), 7:56–58 (describing the tree portion as a collection of parts), 8:40–44 (same), Figs. 1, 4. Also consistent with Dr. Brown's testimony regarding the advantages of such a modular artificial tree (Ex. 2047 ¶¶ 53, 73), the '379 Patent Specification describes that its modular artificial tree has these same advantages. Ex. 1001, 8:16–19

---

in an open aperture. *See* IPR2016-01610, Paper 59, 49–51; 1610 Ex. 2090 ¶¶ 78–80. In particular, the prior art is characterized as not having snug fit between articles such that "branches can simply fall out." *Id.* This is simply argument regarding a deficiency with the asserted prior art.

(describing that "branch 122 may be allowed to pivot about the pin and branch receiver 128, allowing tree portion 104 to collapse to a smaller envelope size for convenient storage"), 15:31–35 ("Embodiments of tree of the present invention provide simplified structures and methods for mechanically coupling tree portions along the trunk without the burden of multiple steps such as rotational alignment or affixing external fasteners such as screws, bolts, or pins.")[16] Additionally, the background section of the '379 patent (*id.* at 1:19–2:32) explains the "modular" concept by way of its discussion of how the user interacts with the tree during assembly, describing the difficult, time-consuming process of assembling prior art trees including difficulties such as lifting tree heavy modules and connecting complex electrical assemblies associated with prior art, pre-lit modular trees. *See SciMed Life Systems, Inc. v. Advanced Cardiovascular Systems, Inc.*, 242 F.3d 1337, 1342–46 (Fed. Cir. 2001) (it is appropriate to rely on the specification's discussion distinguishing the present invention over the prior art).

Our analysis is consistent with our analysis in related proceedings, and is further supported by reasoning given in those proceedings, in view of the similarity of the specifications of the challenged patents. *See* 1610 Final Dec. For the aforementioned reasons, we adopt Patent Owner's proposed construction of "modular artificial tree."

---

[16] Although not necessary for our determination, we further note that Mr. Wood testifies that the '379 Patent seeks to describe "an artificial tree that addresses problems that consumers experienced *when assembling artificial trees with multiple sections*." Ex. 1100 ¶ 10.

3. "interference fit"
(Dependent Claims 12, 15, 32)

The Petition does not include contentions regarding the broadest reasonable interpretation of "interference fit." 1615 Pet. 15–18. In its Preliminary Response, Patent Owner contends that "[a] POSA would understand that an interference fit is an engineered connection where two parts to be connected are deliberately manufactured to be of different dimensions," so as to "deform to force a connection." 1615 Prelim. Resp. 16 (citing 1615 Ex. 2001 ¶ 55). At the institution stage, we determined no express construction of "interference fit" was needed because we were persuaded that the teachings of the asserted art are sufficiently similar to the examples described in the '379 Patent Specification of exerting force to create an interference fit. 1615 Dec. 5–6.

In its Patent Owner Response, relying on the testimony of Dr. Brown, Patent Owner contends that the broadest reasonable interpretation of "interference fit" is "an engineered connection where two parts to be connected are deliberately manufactured to be of substantially different dimensions." 1615 PO Resp. 15 (citing 1615 Ex. 2047 ¶ 54). Patent Owner explains "[w]hen one component is pressed into the other, they interfere due to the substantially different dimensions and deform to force a connection." *Id.* Patent Owner further contends "[a]n 'interference fit stands in contrast to a 'snug fit,' which refers to a connection between components of 'substantially equivalent' size." *Id.* 15 (citing *e.g.*, Ex. 1005, 2:47); *see also id.* at 58 (citing 1615 Ex. 2047 ¶¶ 74, 75) ("A POSA would understand that substantial differences in diameters are precisely what distinguish an 'interference fit' from a 'snug' fit.")

In its Reply, Petitioner contends that "interference fit" means "a fit between two parts in which the external dimension of one part slightly exceeds the internal dimension of the part into which it has to fit." 1615 Pet. Reply 10 (citing 1615 Ex. 1107; 1615 Ex. 1100 ¶ 26). Petitioner further contends that an "interference fit" is a "snug" fit (*id.* at 13 (citing *e.g.*, Ex. 1005, 2:7–10)) and "snug" fit "is achieved" by a portion of a connection with a "'size *substantially equivalent* to the internal diametrical size'" of the member receiving the connection (1615 Pet. 31 (citing Ex. 1005, 2:16–19; 1615 Ex. 1003 ¶ 174) (emphasis added)).

The distinction between "interference fit" and "snug fit" matters in this case because Petitioner reads the claimed "interference fit" on a structure described in the prior art not as an "interference fit" but rather one that has a "snug fit." Both parties agree that the broadest reasonable interpretation of "interference fit" is a fit between two parts having different dimensions. 1615 Pet. Reply 10 (citing 1615 Ex. 1107; 1615 Ex. 1100 ¶ 26); 1615 PO Resp. 15 (citing 1615 Ex. 2047 ¶ 54). Patent Owner, however, characterizes the difference as "substantial" such that, when pressed, the parts "deform to force a connection." 1615 PO Resp. 15 (citing 1615 Ex. 2047 ¶ 54). The key to Patent Owner's construction, we believe, is that the sizes "force a connection," i.e., is strong enough to cause the two pieces to remain fixed relative to each other. The two pieces are "held together" "thereby securing" the connection. *See, e.g.*, Ex. 1001, 13:1–2; *see also id.* at 16:5–8 (describing an "interference fit" as securing plug 254 such that it "is unlikely to move along the vertical axis A or rotationally about vertical axis A when a user of tree 100 couples base portion 102 and trunk portion 120 together.") Petitioner acknowledges that the external

dimension of one part exceeds the internal dimension of that part into which it has to fit, but contends a dimension that "slightly exceeds" is sufficient. 1615 Pet. Reply 10, 31 (citing 1615 Ex. 1107; 1615 Ex. 1100 ¶ 26; Ex. 1005, 2:16–19; 1615 Ex. 1003 ¶ 174); Tr. 29:23. Notably, Petitioner's construction is unconcerned with whether the two parts are fixed relative to each other, and is only concerned with whether they are somewhat different in size

Both parties rely on the testimony of their declarants and argue that the '379 Patent Specification's description of examples of creating an "interference" fit supports their proposed construction. 1615 PO Resp. 15, 58 (citing *e.g.*, 1001, 12:65–13:2, 14:32–36; 1615 Ex. 2047 ¶¶ 54, 74, 75); 1615 Pet. Reply 10 (citing *e.g.*, Ex. 1001, 14:60–15:23, 15:59–16:5; 1615 Ex. 1100 ¶¶ 26, 27, 31). Both parties also identify extrinsic evidence that they argue supports their contentions. In particular, Petitioner's declarant, Mr. Wood, identifies as supporting evidence the Oxford Dictionary of English that defines "interference fit" as "a fit between two parts in which the external dimension of one part slightly exceeds the internal dimension of the part into which it has to fit." 1615 Ex. 1100 ¶ 26 (citing 1615 Ex. 1107, 903). Patent Owner's declarant, Dr. Brown, identifies as supporting evidence for his testimony "an engineering reference on types of shaft-hole fits, *available at* http://www.engineersedge.com/general_tolerances.htm." 1615 Ex. 2047 ¶ 75 (citing 1615 Ex. 2051).[17]

---

[17] Dr. Brown's declaration indicates "[a] true and correct copy of this secondary reference material is Exhibit 2014 to this Response." Ex. 2047 ¶ 75. In IPR2016-01615, an exhibit with the number 2014 was submitted by Patent Owner in connection with a discovery request, and is now expunged. *See, e.g.*, IPR2016-01615, Paper 31, 3. In IPR2016-01615,

Upon consideration of the full trial record and the parties' contentions and evidence, as well as the examples set forth in the '379 Patent Specification, we are persuaded by the contention presented by Patent Owner that a "snug fit" is not necessarily an "interference fit" as required by the claim. What makes an interference fit is not necessarily size but rather the resulting connection. For instance, Patent Owner's contentions and Dr. Brown's testimony that in an "interference fit" the parts or components interfere and deform to *force a connection* is consistent with portions of the '379 Patent Specification cited therein. 1615 PO Resp. 15; 1615 Ex. 2047 ¶ 54. Additionally, as we indicated in the Decision on Institution:

> The '379 patent describes examples of creating an "interference" fit such as, "*force is exerted* onto contact set 250 such that plug 254, insert 252 and contact 250 are *held together* forming an *interference fitment*, thereby securing contact set 250 in head assembly 204." Ex. 1001, 12:66–13:2 (emphases added); *see also id.* at 13:62–65 ("[*F*]*orce* is exerted onto contact set 302 such that plug 254, insert 304 and contact set 304 *are held together form[ing] an interference fitment*, thereby securing contact set 304 in head assembly 216"). As an additional example, the '379 patent describes, "[w]hen seated, the weight of trunk portion 120 exerts *a downward force* onto base-trunk portion 114 creating *an interference fit* between lower end 123 and upper end 198." *Id.* at 15:19–21; *see also id.* at 16:2–3

---

the "engineering reference" has exhibit number 2051. *See* 1615 Ex. 2051 (entitled "Mechanical Tolerance Standards Charts Geometric Boundaries II GD&T Reference Book.") We treat Dr. Brown's identification of "Exhibit 2014," rather than Exhibit 2051 as a typographical error. Similar typographical errors are found in Dr. Brown's declarations in each of IPR2016-01616 and -01617. *See* 1616 Ex. 2045 ¶ 64; 1617 Ex. 2045 ¶ 50. For each of the instant proceedings, we refer to the correct exhibit number herein.

> (describing an creating an interference fit by "*deformation or compression* of plug 254").

1615 Dec. 6 (emphases added). Indeed, Patent Owner relies on one of these same portions of the '379 Patent Specification in support of its contentions. *See* 1615 PO Resp. 15–16 (citing *e.g.*, Ex. 1001, 12:65–13:2, 14:32–36; 1615 Ex. 2047 ¶¶ 54).

Petitioner's dispute pertains to the use of the word "substantially" in Patent Owner's proposed broadest reasonable interpretation. 1615 Pet. Reply 10 (citing e.g., Ex. 1001, 15:59–16:5, 1615 Ex. 1100 ¶¶ 26, 27). Petitioner, however, acknowledges that Patent Owner's declarant, Dr. Brown testifies that "interference fit" may "physically not represent a big difference," depending on the stiffness of a material. 1615 Pet. Reply 10–11 (citing *e.g.*, 1615 Ex. 1104, 134:9–12).

Furthermore, our determination regarding Petitioner's unpatentability contentions does not hinge on whether the difference in sizes is substantial or slight, but instead on whether two components described as having a "snug fit" have an "interference fit," or whether a fit with diameters that are "substantially equivalent" necessarily form an "interference fit." 1615 Pet. 31; 1615 PO Resp. 56–58; 1615 Pet. Reply 13–14. Petitioner's extrinsic evidence i.e., the Oxford Dictionary of English defines "interference fit" as "a fit between two parts in which the external dimension of one part slightly exceeds the internal dimension of the part into which it has to fit." 1615 Ex. 1107, 903. Contrary to Petitioner's contentions (*see, e.g.*, 1615 Pet. Reply 10–11), that reference does not further define "slightly exceeds," or otherwise indicate that an "interference fit" is achieved by parts with dimensions that are "substantially equivalent." 1615 Ex. 1107, 903.

Petitioner contends that both a "snug fit" and a fit with diameters that are "substantially equivalent" are examples of an "interference fit" because, according to Petitioner, this interpretation is *consistent with the '379 Patent Specification*. *Id.* For instance, Mr. Wood testifies that "with regards to the interference fit formed between adjacent trunk portions, the '379 Patent uses the term 'interference fit' to include a 'transitional fit' or a 'snug fit' as described in the Tolerance Table provided by PO." 1615 Ex. 1100 ¶ 29.

Petitioner and Mr. Wood, more specifically, rely on a few portions of the '379 Patent Specification. 1615 Ex. 1100 ¶¶ 26–29 (citing Ex. 1001, 14:60–15:26, 15:19–26, 15:60–16:5); 1615 Pet. Reply 10–14 (citing Ex. 1001, 14:60–15:23, 15:19–26, 15:59–16:5). Upon review of Petitioner's contentions and evidence, including the identified portions of the '379 Patent Specification (*id.*), we are not persuaded that these portions support a broadest reasonable interpretation of "interference fit" that differs from the ordinary meaning that parts or components interfere and deform to *force a connection*, or supports an interpretation of "interference fit" that encompasses, for example, a snug fit.

The first of the portions relied upon by Petitioner refers to the relative diameters of trunk portions. Ex. 1001, 14:60–15:26. For instance, that first portion of the '379 Patent Specification relied upon by Petitioner describes diameters of "upper portion 198" or "upper end 198" of "base trunk portion 114" and "lower end 123" of "trunk body 121." Ex. 1001, 15:3–10. Contrary to Petitioner's contentions and consistent with Patent Owner's contentions and explanation, the challenged claims reciting "interference fit," i.e., claims 12, 15, and 32 recite that a "trunk connector" forms the "interference fit." Ex. 1001, 25:48–50, 25:58–60, 28:49–51. The '379

Patent Specification is consistent with these claims and Patent Owner's contentions and explanation (*see, e.g.*, 1615 PO Resp. 15–16; 1615 Ex. 2047 ¶ 54; Tr. 60:1–17) that the "interference fit" is formed by the plug, adapter, or connector within one or more of the trunk portions, such that the diameters of the trunk portions would not be determinative. *See, e.g.*, Ex. 1001, 11:45–54, 12:65–13:2, 14:31–37. Petitioner does not persuade us that the first portion of the '379 Patent Specification describes an "interference fit" being formed by the diameters of the trunk portions that are approximately the same. 1615 Pet. Reply 10–11; 1615 Ex. 2047 ¶¶ 27, 28. Indeed, consistent with Patent Owner's contentions and explanation (*see, e.g.*, PO Resp. 15–16; Ex. 2047 ¶ 54; Tr. 60:1–17), that first portion of the '379 Patent Specification indicates *only* that the downward force exerted creates the interference fit. Ex. 1001, 15:19–21. The diameters of the trunk portions (Ex. 1001, 15:9–11) are not mentioned in connection with forming an interference fit (*id.* at 15:19–23).

With the exception of describing that the downward force exerted creates the interference fit, which mechanically couples upper and lower portions (*id.* at 15:19–26), the first of the portions relied upon by Petitioner referring to the relative diameters of trunk portions (1615 Pet. Reply (citing Ex. 1001, 14:60–15:26)) is silent with respect how the interference fit is formed. That mechanical coupling reasonably could be understood to refer to other portions of the '379 Patent Specification that describe a plug, adapter, or connector within a trunk portion forming an "interference fit." *See, e.g.*, Ex. 1001, 11:45–54, 12:65–13:2, 14:31–37. For instance, the '379 Patent Specification describes exertion of force to hold parts together (*id.* at 12:65–13:2) and "an upper diameter somewhat larger than a lower diameter"

(*id.* at 14:31–37). Thus, rather than supporting Petitioner, the first portion of the ’379 Patent Specification relied upon by Petitioner is consistent with Patent Owner’s contentions and explanation. *See, e.g.*, PO Resp. 15–16; Ex. 2047 ¶ 54; Tr. 60:1–17.

The remaining portions of the ’379 Patent Specification relied upon by Petitioner do not persuade us that “interference fit” means a “snug” fit or a fit of two parts having sizes that are “substantially equivalent,” as Petitioner contends. 1615 Pet. Reply 10–14 (citing Ex. 1001, 14:60–15:23, 15:19–26, 15:59–16:5); 1615 Ex. 1100 ¶¶ 26–29 (citing Ex. 1001, 14:60–15:26, 15:19–26, 15:60–16:5). One of the remaining portions of the ’379 Patent Specification is limited to indicating that the DeVicaris tree may be taken apart. Ex. 1001, 14:60–15:26, 15:19–26, 15:60–16:5. Mr. Wood testifies that the tree may be disassembled means “interference fit” is broader than Patent Owner’s proposed definition. 1615 Ex. 1100 ¶ 29 (citing 1615 Ex. 2051). Patent Owner, however, acknowledges that the tree may be disassembled. *See generally* 1615 PO Resp. Additionally, although the ’379 Patent Specification indicates that the tree can be disassembled, the ’379 Patent Specification also describes that the portions of the tree are intended to be held together while the tree is assembled. *See, e.g.*, Ex. 1001, 11:45–54, 12:65–13:2, 14:31–37.

Regarding the third and last portion of the ’379 Patent Specification relied upon by Petitioner (1615 Pet. Reply 10–14 (citing Ex. 1001, 14:60–15:23, 15:19–26, 15:59–16:5); 1615 Ex. 1100 ¶¶ 26–29 (citing Ex. 1001, 14:60–15:26, 15:19–26, 15:60–16:5)), that portion describes that the diameter of the top end may be “slightly” larger than the bottom end, to “deform” “forming a compression or interference fit.” Ex. 1001, 15:60–

16:5. We are not persuaded that the third and last portion of the ’379 Patent Specification describes that “interference fit” means a “snug” fit or a fit of two parts having sizes that are “substantially equivalent,” as Petitioner contends. 1615 Pet. Reply 10–14; 1615 Ex. 1100 ¶¶ 26–29.[18]

Petitioner and Mr. Wood rely entirely on the ’379 Patent Specification to recharacterize Petitioner’s proposed construction such that “slightly exceeds,” encompasses “snug” fit or a fit with two parts having “substantially equivalent” sizes. 1615 Pet. Reply 10–14; 1615 Ex. 1100 ¶¶ 26–28. Essentially, Petitioner proposes that its proposed construction encompasses an external dimension that does not exceed at all the internal dimension. Based on the parties’ contentions and the testimonial evidence of both Dr. Brown and Mr. Wood, as well as the extrinsic evidence offered by both parties, we are not persuaded that the ’379 Patent

[18] In response to the dissent’s assertion that examples cited in the institution decision support Petitioner’s contention that “interference fit” encompasses a snug fit or a fit between components of substantially equivalent sizes, we now have the complete trial record before us, including Petitioner’s own evidence that one having ordinary skill in the art would understand “interference fit” as “a fit between two parts in which the external dimension of one part slightly exceeds the internal dimension of the part into which it has to fit.” 1615 Ex. 1107, 903. We do not find that the portions of the ’379 Patent Specification that describe “body-tapered” embodiments (Ex. 1001, 12:65–13:1, 13:62–65) set forth a special definition of the term “interference fit” with reasonable clarity, deliberateness, and precision. *See In re Paulsen*, 30 F.3d 1475, 1480 (Fed. Cir. 1994). Indeed, that description in the ’379 Patent Specification is consistent with the requirement that a larger diameter fit into a smaller diameter, for example, by describing “tapered” as having “an upper diameter somewhat larger than a lower diameter so as to assist in forming an interference fit.” Ex. 1001, 14:32–35.

Specification supports characterizing "slightly exceeds" in the manner Petitioner proposes.[19]

For the reasons given, we adopt Patent Owner's construction that an "interference fit" is an engineered connection where two components or parts to be connected are manufactured to be of different dimensions such that when one component is pressed into the other, they interfere and deform to force a connection. 1615 PO Resp. 15 (citing 1615 Ex. 2047 ¶ 54). We, additionally, agree with Patent Owner's contentions that an "interference fit" stands in contrast to a "snug fit" and a fit between components of "substantially equivalent" size. *Id.* 15, 58 (citing *e.g.*, Ex. 1005, 2:47; 1615 Ex. 2047 ¶¶ 74, 75). Although an interference fit may be snug, not all snug fits are interference fits. An interference fit requires that the force of the fit causes the connection—not just that something is set snugly against the other.

B. Person of ordinary skill in the art

Petitioner proposes that a person of ordinary skill in the art had:

> (1) a degree in mechanical engineering or electrical engineering; (2) a minimum of one or two years of experience in mechanical engineering, electrical engineering, or electronics, specifically lighting manufacturing and/or design; and (3) general knowledge of engineering that would include understanding of lighting

[19] Petitioner additionally contends that Patent Owner's "construction is narrower than positions PO took in federal litigation." 1615 Pet. Reply (citing 1615 Ex. 1111, 109, 143–44; 1615 Ex. 1112, 96–97). The statements quoted by Petitioner (*id.*), however, are from infringement claim charts, not claim construction briefs, and Patent Owner reserved the right to amend the charts "based upon claim construction rulings or positions." 1615 Ex. 1111, 1–2; 1615 Ex. 1112, 1–2.

> design, construction, functions, attributes and processes used to implement such products.

1615 Pet. 15 (citing 1615 Ex. 1003 ¶ 18).

Patent Owner offers the following description:

> A person having ordinary skill in the art during the relevant timeframe would have been either (1) a person with at least a bachelor's degree in mechanical engineering or electrical engineering and at least one to two years of experience in the development of mechanical and electrical products, or (2) a person with at least one to two years of experience in product development, design, or manufacturing of lighted artificial trees.

1615 PO Resp. 12–13 (citing 1615 Ex. 2047 ¶ 48). Patent Owner contends that its current proposal differs from that provided by Petitioner because, under Patent Owner's description, a person need only worked in the relevant field for a couple of years, whereas Petitioner's proposal requires a degree. *Id.* at 13.

Reviewing the parties' proposed definitions, we find Petitioner's to be the more appropriate, with one caveat discussed later. Petitioner's proposed level of skill would allow that person to understand the prior art in this proceeding and make and/or use it. Patent Owner's proposed level of skill is too low, and includes persons not involved in the design or creation of the product, such as a person tangentially involved with the product in the manufacturing phase. We agree with Petitioner, arguing in its Reply, that a person of ordinary skill in the art requires the technical skills and knowledge to be able to understand, e.g., the electrical connections involved in the artificial trees. Pet. Reply 24–26.

That said, however, Petitioner's proposed definition is broadly directed to "lighting design." We are persuaded that a person of ordinary

skill in the art would have broader knowledge outside of lighted artificial trees, but we are not persuaded that a person who spends her time on industrial lighting applications has "ordinary skill" in the claimed subject matter, as Petitioner would propose. Granted, with her knowledge and skills, she would likely readily become such a person with exposure, but she would need some time to become familiar with the particularities of the design of lighted artificial trees. *See, e.g.*, Pet. Reply 24 (highlighting a need for consideration of safety standards for consumer products); Ex. 1100 ¶ 6 (same). Accordingly, we adopt Petitioner's level of skill with the modification that the person of ordinary skill in the art have: "(2) a minimum of one or two years of experience in electrical engineering or electronics, specifically ~~lighting~~ lighted artificial tree manufacturing and/or design."

C. The DeVicaris and Korengold Grounds (Independent Claim 1 and Dependent Claims 2–4, 6, 8, and 12–14)

1. Claim 1

a. Petitioner's Ground—Claim 1

Claim 1 recites a modular artificial tree including trunk portions and wiring provided inside the trunk. Claim 1 also includes limitations specifying that an electrical connection is made by connecting the first and second trunk portions and that first and second trunk connectors are securable to first and second trunk bodies, respectively, in at least four rotational alignments.

Petitioner asserts that the subject matter of claim 1 would have been obvious to a person of ordinary skill in the art. 1615 Pet. 10–15, 18–47. Petitioner asserts that DeVicaris teaches many of the elements of claim 1.

See, e.g., *id.* at 30–32, 35–39, 44. Petitioner's excerpted, annotated versions of Figure 2 of DeVicaris, reproduced below, show DeVicaris's connection (*id.* at 35, 28).

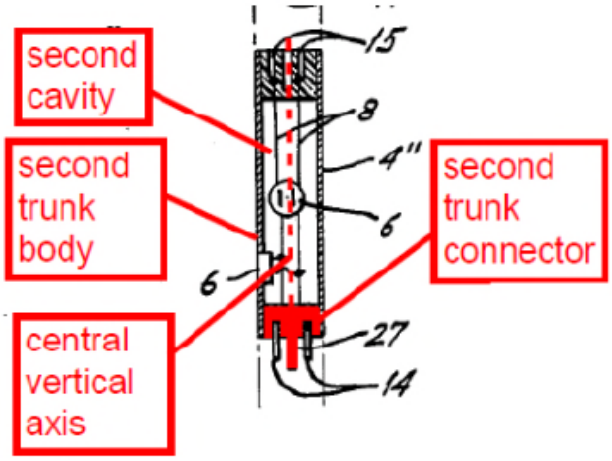

Annotated Section of a Trunk with Prongs 14 of an Artificial Tree (Figure 2)

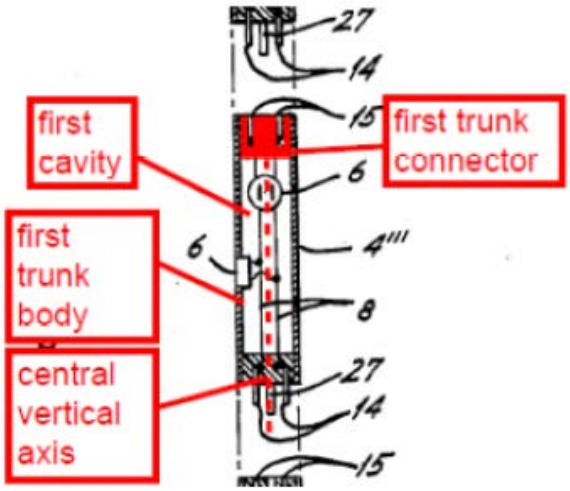

Annotated Section of a Trunk with Electrical Receptacle 15 of an Artificial Tree (Figure 2)

Each of Petitioner's excerpted, annotated versions of Figure 2 of DeVicaris shows a cross section of an artificial tree and, inside it, a prong and receptacle connection. Petitioner provides a further excerpted, annotated version of Figure 2 of DeVicaris, including the version reproduced below, showing the electrical wiring and electrical contacts within DeVicaris's artificial tree (*id.* at 34).

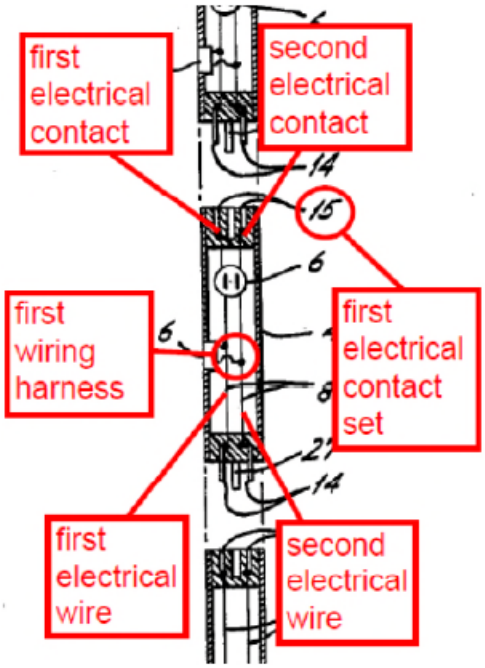

Annotated Section of a Trunk showing Wiring with an Artificial Tree (Figure 2)

Petitioner also asserts:

> However, while the connectors of *DeVicaris* are disposed in the ends of the tubular trunk sections, *DeVicaris* does not explicitly teach how its trunk connectors are secured in respective trunk bodies, or whether they could be secured "in at least four rotational alignment positions about the central vertical axis." Ex. 1003 ¶ 38. But this was well known in the art. For example, *Korengold* teaches electrical connectors (i.e., female connector member 7 and male connector member 16) that are secured within tubular members by way of interference fit-type

> connections, which allow the connectors to be secured in any rotational alignment position, including "at least four rotational alignment positions," in the tubular sections. Ex. 1005, 2:7–19, 2:37–54, Fig. 1; Ex. 1003, ¶¶ 131–34.

Pet. 18–19.

Petitioner points to Korengold's teachings regarding an electrical connector. 1615 Pet. 30–32 (citing, *e.g.*, Ex. 1005, 1:20–24, 2:7–10, 2:16–19, Figs. 1, 4–5). Korengold's Figure 1 with Petitioner's annotations (*id.* at 31) is reproduced below:

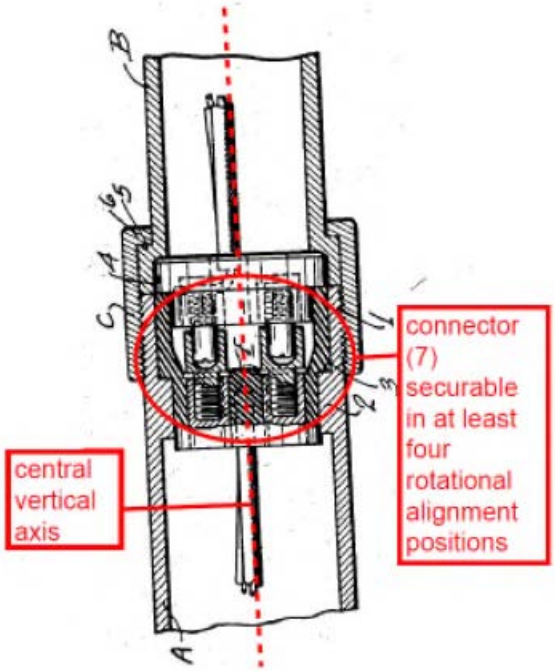

Annotated and Rotated Electrical Connector (Figure 1)

Figure 1 of Korengold is a perspective view of an electrical connector that is connected in a conduit pipe. Korengold teaches:

> Formed preferably of molded "Bakelite," hard rubber, or other suitable dielectric material for snug-fitting removable disposition within the connector-socket 3, is a female connector member 7 including cylindrical shank portion 8 provided with a pair of axial bores 9 and a pair of tapped plugs 10, preferably formed of

> electrically conductive material and molded into or otherwise rigidly mounted in the shank portion 8, the shank portion 8 being of external diametrical size substantially equivalent to the internal diametrical size of the annular shoulder 2 of the conduit member A.

Ex. 1005, 2:6–19.

Regarding a reason to combine the teachings of DeVicaris with the teachings of Korengold, Petitioner contends:

> In light of the collective teachings of *DeVicaris* and *Korengold*, it would have been obvious to a POSA to select an interference fit, as taught by *Korengold*, to secure the connectors of *DeVicaris* in the ends of the trunk sections because both references concern using electrical connectors within tubular bodies to achieve electrical and mechanical connections. Ex. 1003, ¶¶ 155, 157–62. A POSA would have been motivated to enhance *DeVicaris* in this manner to improve the ease of assembly. *Id.*, ¶ 158. Indeed, *DeVicaris* recognizes the ease of assembly as an objective in the art. Ex. 1004, 3:28–29. The rotational freedom afforded by *Korengold's* interference fit-type connection would permit the female and/or male electrical connectors of *DeVicaris* to be inserted into, and secured within, respective trunk sections in *any* rotational alignment position without the need for adhesives, screws, etc. Ex. 1003 ¶ 159. Such an interference fit would also provide more flexibility on the final insertion position that would be desirable after connecting the wires running through the trunk section to electrical contacts in the female-type and male-type electrical connectors of *DeVicaris*. *Id.* Using this type of interference fit would reduce the time required to install the female and male type electrical connectors within the trunk sections. *Id.*

Pet. 19–20.

Petitioner also characterizes its proposed modification as follows: "replacing *DeVicaris's* connection with the type taught by *Korengold* is a substitution of one known element for another and a combination of prior art

elements according to known methods to yield predictable results." *Id.* at 21 (citing, *e.g.*, Ex. 1003 ¶¶ 159, 162). Regarding this substitution, Petitioner additionally asserts that although "bodily incorporation is not required to show the obviousness of the claimed subject matter," Korengold's connector may be incorporated bodily into the structure of DeVicaris. *Id.* at 22.

b. Patent Owner's Response and Petitioner's Reply— Claim 1

Patent Owner disputes Petitioner's ground and makes the following arguments in response: (1) DeVicaris and Korengold do not teach a "modular artificial tree" recited in claim 1 (1615 PO Resp. 53–56); and (2) Petitioner has not provided a reason to modify DeVicaris's tree to implement Korengold's different connector (*id.* at 31–46, 60–61). Petitioner replies to the above contentions in its Reply.

c. Discussion Regarding "Modular Artificial Tree"—Claim 1

Claim 1 recites "modular lighted artificial tree" in its preamble. As we determined above, the preamble breathes life and meaning to the body of the claim, telling a person of ordinary skill in the art that the particular tree configuration is a modular tree. Specifically, read in light of the specification, the claim requires "a tree constructed of modular portions, each modular portion being a separate tree section."

Claim 1, through its "modular" limitation, and its description of how the modules connect, requires particular modular units that connect when the trunks are connected.[20] As we have construed "modular artificial tree," Petitioner has not provided sufficient evidence that the proposed combination of DeVicaris and Korengold satisfy this claim limitation.

[20] As discussed below, claims 5 and 28 recite a modular artificial tree.

Petitioner points to DeVicaris's teaching of an artificial tree comprising multiple trunk sections 4'–4"" and argues these sections can be assembled and easily disassembled for storage. Pet. 22 (citing Ex. 1004, 2:19–20, 3:64–, 4:66–67, Fig. 2; Ex. 1003 ¶ 163). Petitioner, however, has not addressed how these trunk sections form part of the claimed modular artificial tree. The DeVicaris tree has branches that are separate units from the trunk portions. Ex. 1004, Figs. 1, 2. The claim requires a modular artificial tree, which read in light of the specification is a tree constructed of modular portions, each modular portion being a separate tree section that includes branches and trunk portions.[21] In DeVicaris, however, the branches, for example, are not part of a module with the trunk, but rather independent from the trunk, being separately plugged in. *Id.*

We credit the testimony of Patent Owner's expert, Dr. Brown, that the trunk is separate and does not have the claimed modular relationship with other elements of the tree, as required by this claim. Ex. 1001, Figs. 1, 2, 3:39–40 (noting the limbs are inserted into electrical connectors), Ex. 2047 ¶¶ 53, 73. Consistent with Dr. Brown's testimony (*id.*), for example, we

---

[21] As discussed *supra* in Section II.A.2, we credit and give substantial weight to Dr. Brown's testimony that a person having ordinary skill in the art would "recognize[] modular" as a "distinct" type of artificial tree with tree sections that come "with branches pre-attached to the trunk" so that assembly is "quick and easy" because "[o]nce the trunk portions are connected, the branches of the tree sections typically fall into place themselves" (1615 Ex. 2047 ¶ 73) because his testimony is consistent with the '379 Patent Specification, including the specification's description of advantages of such a tree. *See, e.g.*, Ex. 1001, 8:16–19 (describing that "branch 122 may be allowed to pivot about the pin and branch receiver 128, allowing tree portion 104 to collapse to a smaller envelope size for convenient storage"), 15:31–35.

find that the trunk in this combination is structured and arranged such that a user assembles trunk units in whole without having assembled the branches, indicating that the trunk and branches are not part of the module required by the claims. Ex. 1004, Figs. 1, 2.

Petitioner does not point to any other teachings or other evidence to cure this deficiency. Accordingly, we find that Petitioner has not established, by a preponderance of the evidence that claim 1 is unpatentable.

d. Discussion Regarding Rationale — Claim 1

Although we need not consider further the parties' contentions because of our finding discussed *supra* in Sections II.C.1.a–c that Petitioner has not established, by a preponderance of the evidence that claim 1 is unpatentable, as separate, independent reasoning, we turn to whether a person of ordinary skill in the art would have considered modifying the tubular trunk sections of DeVicaris, to include features from the electrical-mechanical connection mechanism found in Korengold. For the reasons explained below, we find that Petitioner has not established a reason with rational underpinnings explaining why a person of ordinary skill in the art would have modified DeVicaris's trunk to have connectors as taught in Korengold.

Petitioner's reason to combine the teachings of DeVicaris and Korengold is to improve the ease of assembly. *See, e.g.*, 1615 Pet. 19–20. Relying on the testimony of Mr. Wood, Petitioner contends that ease of assembly is improved because of the rotational freedom afforded by Korengold's interference-fit connection that, for example, provides more flexibility on the final insertion position "without the need for adhesives, screws, etc." *Id.* (citing 1615 Ex. 1003 ¶¶ 155, 157–162). Mr. Wood

testifies "[t]he rotational freedom afforded by Korengold's interference fit-type connection would permit the female and/or male electrical connectors of DeVicaris to be inserted into, and secured within, respective trunk sections in any rotational alignment position," as opposed to "one or more discrete rotational alignment positions." 1615 Ex. 1003 ¶ 159. Mr. Wood further testifies that "Korengold explicitly contemplates its electrical connector member assembly being utilized within any sectional 'conduit pipe.'" *Id.* ¶ 160 (citing Ex. 1005, 4:29–33).

We find that Petitioner's rationale was made only in hindsight. That Korengold teaches an electrical connector assembly within a conduit pipe (Ex. 1005, 4:29–33) does not in itself teach rotational freedom. Petitioner's Reply simply reiterates these arguments. *See, e.g.*, 1615 Pet. Reply 14–15 (citing e.g., 1615 Pet. 20). Furthermore, for the reasons discussed *infra* in Section II.C.4, we are not persuaded that Petitioner has shown sufficiently that Korengold teaches interference fit, thus we are not persuaded by Petitioner's assertion that a person of ordinary skill in the art would look to Korengold for an interference fit. 1615 Pet. 19–20; 1615 Ex. 1003 ¶ 159

Mr. Wood, additionally, testifies that "a POSA would have known that using an interference fit was a common method of mechanical coupling and securing electrical connectors in conduit members" and refers to DeVicaris teaching of a "friction-type connector." Ex. 1003 ¶ 175 (citing Ex. 1004, 3:33–35). DeVicaris teaches "a friction-type connector could be arranged between the trunk and base." Ex. 1004, 3:33–35. Mr. Wood's testimony regarding DeVicaris's *inter-trunk electrical connector* is conclusory, however. Additionally, Petitioner contradicts this testimony in its Reply contending that DeVicaris "is silent as to how connectors are

secured into trunk portions." 1615 Pet. Reply 15. Nonetheless, that DeVicaris also teaches a friction-type connector between the trunk and base is not a reason to combine the teachings of DeVicaris and Korengold. Petitioner does not contend with sufficient specificity that DeVicaris alone discloses or teaches all of the features recited in claim 1. *See, e.g.*, Pet. 5, 22–40.

Additionally, Patent Owner provides persuasive contentions regarding disadvantages of the DeVicaris and Korengold combination, including that the proposed combination would make assembly of the DeVicaris tree more difficult. For instance, relying on the testimony of Dr. Brown, Patent Owner contends that "[t]he addition[] of a *Korengold* connector to a modular artificial tree would make putting together and powering the tree *more difficult* because the consumer would be forced to attempt to put together the Korengold connectors secured within the tree's trunk portions without the ability to see inside the trunk portions to ensure proper alignment of the male and female members." 1615 PO Resp. 25–26 (citing 1615 Ex. 2047 ¶ 59). Patent Owner explains that *DeVicaris* teaches a lightweight, user-friendly, two-prong connector with an auxiliary guide-post and Petitioner proposes replacing it with *Korengold's* connector that lacks any guide. *Id.* at 36–38 (citing 1615 Ex. 2047 ¶ 67).

Dr. Brown testifies "the male and female connector members of *DeVicaris* are guided together into the proper rotational configuration by an auxiliary support structure 27 and support member 17." 1615 Ex. 2047 ¶ 59. Dr. Brown also testifies "Korengold contains no such guiding structure" so the end user would have to assemble "the male and female connectors

located inside the trunk portions without the ability to see inside the trunk portions to ensure proper alignment." *Id.* Dr. Brown further testifies:

> *DeVicaris* discloses tubular trunk portions into which lighted branches are received at the trunk portions are connected by the end-user. Because the trunk portions do not initially have branches and lights attached, they are lighter and easier to put together than segments of trees that include the trunk portion, branches, connectors, and lights all together, i.e., tree sections. *DeVicaris's* standard plug and socket connectors are suitable for use in a lightweight, inexpensive artificial tree. By contrast, *Korengold's* connector is a two-prong connector requiring specific prongs to be fitted into specific holes but lacking the guiding mechanism of *DeVicaris*. If the *DeVicaris* tree was modified to include the *Korengold* connector, it would be harder for an end user, who cannot see inside the trunk portions to align the prongs and holes, to put together and power the tree.

1615 Ex. 2047 ¶ 67.

Consistent with Dr. Brown's testimony (1615 Ex. 2047 ¶¶ 59, 66, 67), Korengold illustrates a connector including two prongs that are fitted into holes. *See, e.g.*, Ex. 1005, Fig. 1, 2:50–55. Also consistent with Dr. Brown's testimony (1615 Ex. 2047 ¶¶ 59, 67), DeVicaris teaches that the male-type and female-type parts of the connector are guided together into the proper rotational configuration by an auxiliary support structure 27 and support member 17. Ex. 1004, Figs. 2, 4, 2:58–65, 4:18–64. Petitioner does not provide persuasive responsive argument or evidence in response to Patent Owner's arguments and evidence, including that, instead of teaching rotational freedom, Korengold teaches a two-prong connector requiring specific prongs to be fitted into specific holes. 1615 PO Resp. 36–38; 1615 Ex. 2047 ¶ 67. Instead, Petitioner offers conclusory contentions that DeVicaris's guide could be "readily" added and focuses entirely on the

Korengold's purported teaching of interference fit, rather than rotational freedom, for its reasoning to combine. *See, e.g.*, 1615 Pet. Reply 14–17; 1615 Ex. 1100 ¶¶ 38, 39, 64, 65. Upon consideration of the parties' contentions and evidence, we credit and give substantial weight to the testimony of Dr. Brown as it is consistent with the evidence of record. 1615 Ex. 2047 ¶¶ 59, 66, 67, 77. We give little to no weight to Mr. Wood's testimony (*see, e.g.*, 1615 Ex. 1003 ¶¶ 159, 160) because his testimony is not consistent with the evidence of record and, in particular, the teachings of DeVicaris and Korengold.

In view of the foregoing, we are not persuaded that Petitioner has set forth a sufficient reason to combine the teachings of DeVicaris and Korengold in the manner recited in claim 1.

e. Conclusion—Claim 1

Based on the evidence in the entire trial record, we determine that Petitioner has not demonstrated by a preponderance of the evidence that claim 1 is unpatentable under § 103(a) as obvious over DeVicaris in combination with Korengold.

2. Dependent Claims 2–4 and 6

Each of claims 2–4 and 6 depend directly from claim 1. Ex. 1001, 24:31–50, 25:17–21. Petitioner asserts that claims 2 and 6 are obvious over DeVicaris and Korengold. 1615 Pet. 5. Petitioner asserts that claims 3 and 4 are obvious over DeVicaris, Korengold, and other art. *Id.* Petitioner does not supplement sufficiently its contentions regarding obviousness in its discussion of claims 2–4 and 6 to remedy the deficiencies discussed with respect to claim 1. *See generally* 1615 Pet.

Based on the evidence in the entire trial record, for at least the same reasons given with respect to independent claim 1, we determine that Petitioner has not demonstrated by a preponderance of the evidence that claims 2–4 and 6 are unpatentable under § 103(a) as obvious.

3. Dependent Claims 8, 13, and 14

Claim 8 depends directly from claim 1. Ex. 1001, 25:29–31. Each of claims 13 and 14 depend directly from claim 8, and indirectly from claim 1. *Id.* at 25:51–57. Petitioner asserts that claims 8, 13, and 14 are obvious over DeVicaris, Korengold, and Lessner. 1615 Pet. 5. Petitioner does not supplement sufficiently its contentions regarding obviousness in its discussion of claims 8, 13, and 14 to remedy the deficiencies discussed with respect to claim 1. *See generally* 1615 Pet.

Based on the evidence in the entire trial record, for the same reasons given with respect to independent claim 1, we determine that Petitioner has not demonstrated by a preponderance of the evidence that claims 8, 13, and 14 are unpatentable under § 103(a) as obvious over DeVicaris, Korengold, and Lessner.

4. Dependent Claim 12

Claim 12 recites "[t]he modular artificial tree of claim 1, wherein the first trunk connector forms an interference fit with the first elongated trunk body." Ex. 1001, 25:48–50. In addition to the issues discussed with respect to claim 1, the parties dispute whether the asserted prior art teaches "interference fit," recited in claim 12.

In the Petition, for claim 12, Petitioner references back to its discussion relating to claim 1, which does not recite interference fit. 1615

Pet. 44. Petitioner first states that Korengold describes an interference fit where connector 7 touches socket 3, which Korengold characterizes as a "snug-fit[]." 1615 Pet. 30–31 (citing Ex. 1005, 2:7–10). Petitioner then relies on Korengold's teaching that connector members are "held tightly within each other," with respect to the connection between the male and female electrical connectors. *See, e.g.*, 1615 Pet. Reply 13 (citing Ex. 1005, 4:3–6). Korengold, however, teaches "the joined connector members are then placed into the respective ends of the conduit members A and B, as shown in Figure 1, and *the threaded collar C turned into conduit-connecting position*, whereupon the male and female members, respectively, will be held tightly within each other." *Id.* at 3:75–46 (emphasis added).

Patent Owner disputes Petitioner's ground on the basis that Petitioner failed to show that Korengold teaches the interference fit recited in claim 12. 1615 PO Resp. 56–60. For instance, relying on the testimony of Dr. Brown, Patent Owner contends that Korengold does not teach an "interference fit." 1615 PO Resp. 60 (citing *e.g.*, 1615 Ex. 2047 ¶¶ 36, 54, 74–77). Patent Owner's contentions and Dr. Brown's testimony (*id.*) are based on Patent Owner's contentions regarding the broadest reasonable interpretation of "interference fit," which we determine are persuasive for the reasons set forth *supra* in Section II.A.4. For example, for the reasons given, we agree with Patent Owner's contentions and Dr. Brown's testimony that, based on the entire trial record before us, including the '379 Patent Specification, an "interference fit" stands in contrast to a "snug fit" and a fit between components of "substantially equivalent" size. 1615 PO Resp. 15, 58 (citing e.g., Ex. 1005, 2:47; 1615 Ex. 2047 ¶¶ 74, 75).

In its Reply (1615 Pet. Reply 13–14), Petitioner relies on its contentions that "interference fit" should be construed to mean a fit that is a "snug" fit and a fit of two parts having sizes that are "substantially equivalent," as Petitioner contends. 1615 Pet. Reply 10–14; 1615 Ex. 1100 ¶¶ 26–29. Petitioner contends "[a]s the Board correctly noted, Korengold provides for differences in diameter between components to provide an interference fit." *Id.* at 13 (citing 1615 Dec. 16, 18; Ex. 1005, 2:17). The Decision on Institution was a preliminary decision that was made, for example, without consideration of the Patent Owner Response and evidence cited therewith. 1615 Dec. 1, 16–18, 27. For the reasons discussed *supra* in our claim construction of "interference fit" in Section II.A.4, we are not persuaded by Petitioner's contentions characterizing "slightly exceeds" in its proposed construction (1615 Pet. Reply 10–14; 1615 Ex. 1100 ¶¶ 26–29) in a manner so as to encompass an external dimension that does not exceed at all the internal dimension.

Furthermore, we are not persuaded by Petitioner's showing even under Petitioner's own construction, i.e., that "interference fit" means "a fit between two parts in which the external dimension of one part slightly exceeds the internal dimension of the part into which it has to fit." 1615 Pet. Reply 10 (citing 1615 Ex. 1107; 1615 Ex. 1100 ¶ 26). Petitioner has not pointed to any portions of Korengold that teach an external dimension of one part that slightly exceeds the internal dimension of the part into which it has to fit. *See generally*, 1615 Pet.; 1615 Pet. Reply. Regarding the figures of Korengold, Petitioner contends "Korengold is completely silent on its dimensioning." 1615 Pet. Reply 14.

Dr. Brown's testimony that Korengold does not teach forming of an interference fit is consistent with the evidence of record. 1615 Ex. 2047 ¶¶ 74, 75. For instance, Korengold teaches a "snug-fitting" removable disposition" with "shank portion 8 being of external diametrical size substantially equivalent to the internal diametrical size of the annular shoulder 2." Ex. 1005, 2:6–19. Additionally, Korengold teaches "male connector member 16, including a shank portion 17 of diametrical size and length substantially equivalent to the corresponding inner dimensions of the connector-receiving socket 4 for snug fitting disposition therein." *Id.* at 2:39–43. Petitioner has not pointed to any portions of Korengold that teach where two components or parts to be connected are manufactured such that when one component is pressed into the other, they interfere to force a connection so as to secure the connection. *See generally*, 1615 Pet.; 1615 Pet. Reply.

Upon consideration of the parties' contentions and evidence, we credit and give substantial weight to the testimony of Dr. Brown as it is consistent with the evidence of record. 1615 Ex. 2047 ¶¶ 54, 74–77. We give little to no weight to Mr. Wood's testimony regarding Korengold's teachings (*see, e.g.*, 1615 Ex. 1003 ¶ 173) because his testimony is not commensurate with the scope of claim 12 and is not consistent with the evidence of record and, in particular, the teachings of DeVicaris and Korengold.

Based on the full trial record, therefore, as a separate and independent reason, we determine that Petitioner has not shown sufficiently that Korengold satisfies the interference fit limitation, recited in claim 12. As discussed above, the discussion of claim 12 in the Petition is a reference back to claim 1 and, in connection with contentions regarding reasons to

combine DeVicaris and Korengold provided with respect to claim 1 in the Petition, Petitioner contends that "DeVicaris teaches the use of an interference fit-type coupling ('friction type connector') that could be used to connect the trunk and tree base." Pet. 32 (citing Ex. 1004, 3:33–35). The discussion of "interference fit" in connection with claim 1 is that the skilled artisan would have had a reason to look to Korengold to supplement the DeVicaris teachings because of Korengold's teaching of interference fit, and is, therefore, contrary to a position that DeVicaris alone satisfies the interference fit recited in claim 12. We find that Petitioner's mere reference back to claim 1, is at best an underdeveloped argument in the Petition that lacks discussion regarding how or why the teaching relating to this base connector should be used to modify other trunk connectors of the DeVicaris tree or why the base connector teaching even satisfies the "interference fit" limitation recited in claim 12. Additionally, in its Reply, Petitioner contradicts this argument contending that DeVicaris "is silent as to how connectors are secured into trunk portions" and relies on only Korengold for teaching "interference fit." 1615 Pet. Reply 13–15.

In conclusion, we find that Korengold does not teach an interference fit. Under Petitioner's proposed construction of "interference fit," where all that is required is one dimension to slightly exceed another, Petitioner has not offered persuasive evidence or technical reasoning that connector 7 in Korengold has a larger diameter than socket 3.[22] We have already explained

[22] Further, nothing in the fact that it is a snug fit requires the connector to be larger than the socket—for example, it could be equally sized and held in place by friction. *See also* Ex. 1005, 1, right col., ll. 15–19 ("substantially equivalent size").

why Petitioner's proposed construction of "interference fit," where all that is required is a "snug fit," is unpersuasive in our claim construction section. Finally, under the broadest reasonable interpretation of "interference fit," we do not find Korengold to teach such a limitation. Korengold teaches, for example, that female connector 7 sits in socket 3 formed out of conduit A by annular collar 2. Ex. 1005, 1, left col., ll. 45–50. Socket 4 is likewise formed to abuttingly receive male end 17. *Id.* at 1, left col., ll. 50–55. Connector 7 is intended to be removable; the reason being that the user has to assemble the wires to the connector. *Id.* at 1, right col., ll. 7–19 (removable); 2, left col., ll. 27–39 (assembly). Given that the male and female connectors must be compressed, the presence of sockets which would backstop movement of the connectors, and the description of the connectors as removable, we do not find credible Petitioner's position that these show an interference fit, i.e., where deformation would force a *connection*. *Accord* Ex. 2047 ¶¶ 36, 65, 74–76. In other words, application of Korengold's fit in DeVicaris's connector (which does not have a backstop), would likely result in the connector not connecting but rather being pushed up into the trunk. *Id.* ¶ 76 (stating that Korengold uses "shoulder 2 to prevent over insertion").

Claim 12 depends directly from claim 1 and Petitioner does not supplement sufficiently its contentions regarding obviousness in its discussion of claims 12 to remedy the deficiencies discussed with respect to claim 1. *See generally* 1615 Pet. Accordingly, based on the evidence in the entire trial record, we determine that Petitioner has not demonstrated by a preponderance of the evidence that claim 12 is unpatentable under § 103(a) as obvious over DeVicaris in combination with Korengold.

D. The Hicks, DeVicaris, and Raymond Grounds (Independent Claim 5 and Dependent Claims 10, 11, and 15–16)

1. Claim 5

a. Petitioner's Ground—Claim 5

Claim 5 is directed to a lighted modular artificial tree having tree sections that include a trunk, branches, and lights. Claim 5 also includes limitations directed to wiring provided inside the trunk. Claim 5 further specifies that the tree comprises a top connector body with a flanged portion.

Petitioner asserts that the subject matter of claim 5 would have been obvious to a person of ordinary skill in the art. 1616 Pet. 19–45. Petitioner asserts that Hicks teaches most of the elements of claim 5 with the possible exceptions of a connector assembly that includes a trunk connector located at least partially within a trunk and a top connector body having a flanged portion and a receiving port, recited in claim 5. *Id.* Petitioner's excerpted, annotated versions of Figure 2 of Hicks (*id.* at 29, 28), reproduced below, show Hicks's first and second tree sections, having branches and lights.

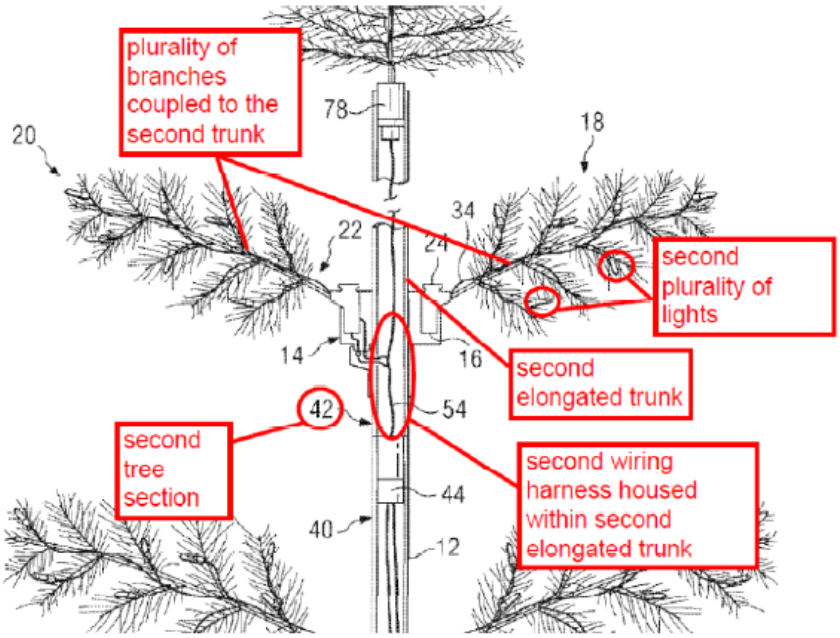

Annotated Cross-sectional View of Artificial Tree (Top of Figure 2)

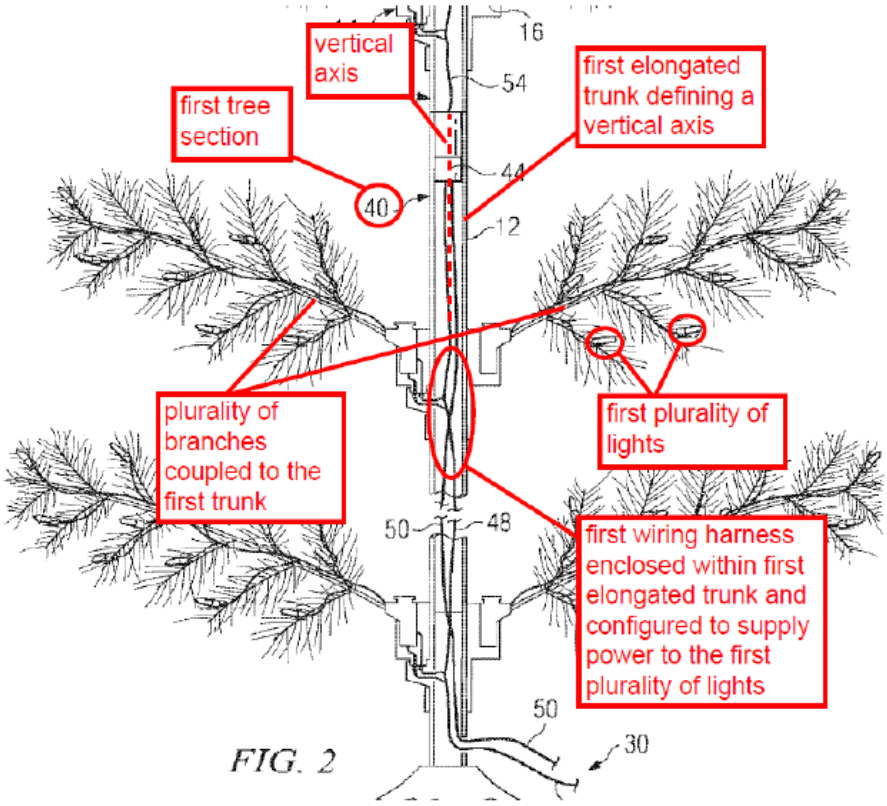

Annotated Cross-sectional View of Artificial Tree (Bottom of Figure 2)

For the connector assembly that includes a trunk connector located at least partially within a trunk, Petitioner points to Hicks's plug 44 that connects bottom portion 40 to top portion 42 of Hicks's artificial tree. *See, e.g.*, 1616 Pet. 30 (citing Ex. 1006 ¶¶ 21, 22, 26, Fig. 4; Ex. 1003 ¶¶ 168, 180). Petitioner's annotated version of Figure 4 of Hicks, reproduced below, shows Hicks's connection (*id.* at 31).

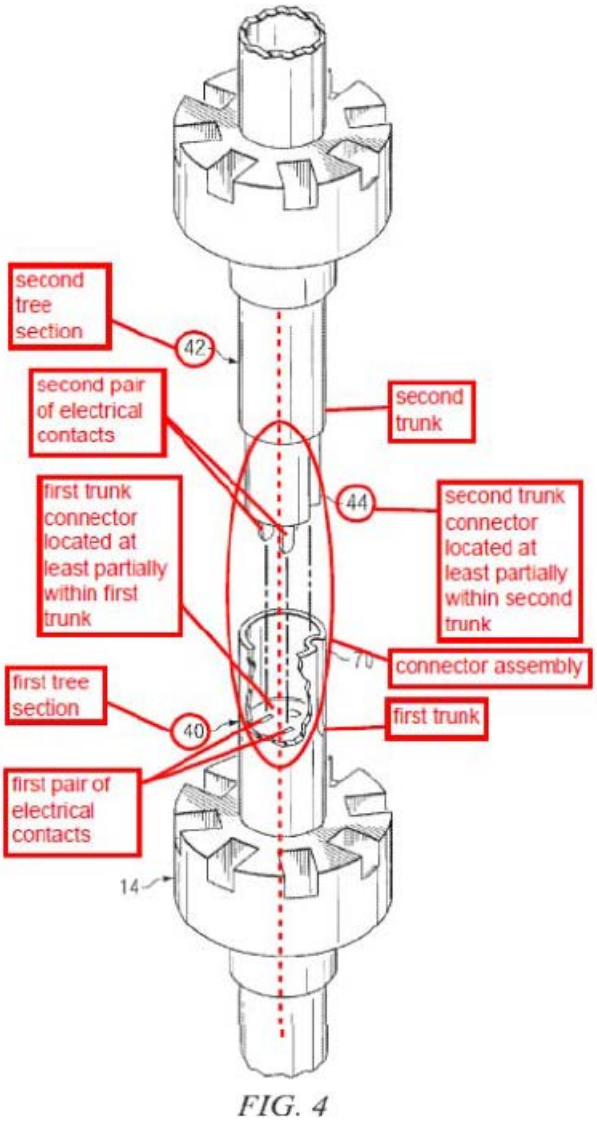

Annotated Top and Bottom Halves of Center Pole
(Figure 4 of Hicks)

Petitioner contends, alternatively, "to the extent that Patent Owner may argue that *Hicks* does not explicitly disclose the plug 44 being located at least partially within the second trunk, DeVicaris explicitly teaches this limitation." 1616 Pet. 31–32. Petitioner's excerpted, annotated version of Figure 2 of DeVicaris, reproduced below, shows DeVicaris's connection (*id.* at 33).

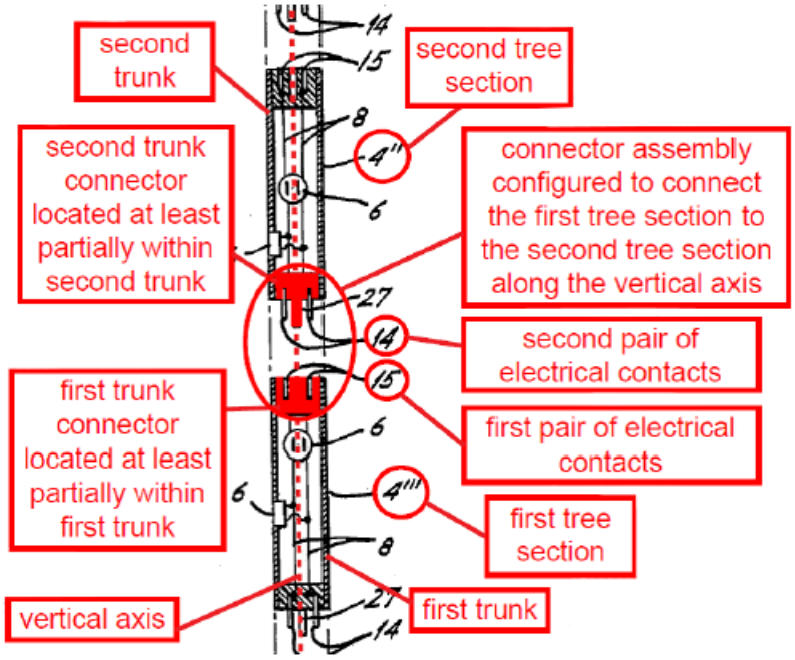

Annotated Section of a Trunk with Connector of an Artificial Tree (Figure 2 of DeVicaris)

Petitioner's excerpted, annotated version of Figure 2 of DeVicaris shows a cross section of an artificial tree and, inside it, a prong and receptacle connection.

For the top connector body having a receiving port, recited in claim 5, Petitioner contends that tree-top 46 teaches a top connector that includes a receiving port. *Id.* at 37. Petitioner points to Raymond's teaching relating to stopper 88 for the flanged portion of the claimed connector. Petitioner's

excerpted, annotated version of Figure 11 of Raymond, reproduced below, shows Raymond's top connector and flanged portion (*id.* at 41).

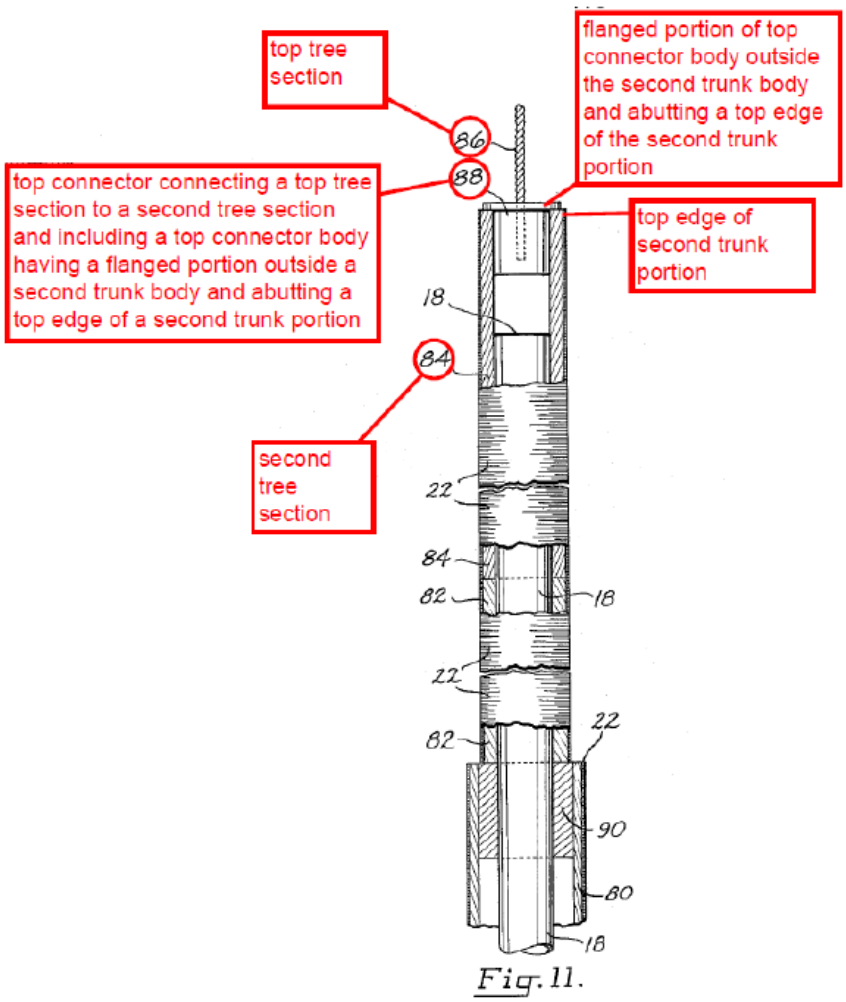

Annotated View of an Artificial Tree (Figure 11 of Raymond)

Petitioner also contends:

> In light of the collective teachings of *Hicks* and *DeVicaris*, it would have been obvious to a POSA to enhance the connector assembly of *Hicks* by securing the second trunk connector (plug 44) of *Hicks* at least partially within the second trunk (top portion 42 of trunk 12), as explicitly taught be *DeVicaris*, to stabilize the connection between the plug 44 and top portion 42, thereby making the tree safer and easier to assemble, use, and disassemble.

1616 Pet. 20 (citing Ex. 1006 ¶ 8; 1616 Ex. 1003 ¶¶ 160, 165).

Regarding the combination of Raymond with Hicks and DeVicaris, Petitioner contends:

> Additionally, it would have been obvious to a POSA to enhance the top connector of *Hicks/DeVicaris* (plug 78) by providing it with a flanged portion about the top of plug 78, such as the flanged portion taught by the top connector of *Raymond*, to prevent damage to the electrical terminals of the top trunk connector (prongs of plug 78) due to over-insertion, improve the stability of the artificial tree, and protect the electrical terminals of the top trunk connector and of its mating trunk connector against the elements (e.g., liquids, dust, debris).

Id. at 23 (citing Ex. 1007, 4:14–15, Fig. 11; 1616 Ex. 1003 ¶ 171).

b. Discussion—Claim 5

As an initial matter, Petitioner contends that Patent Owner implicitly agrees that the prior art teaches all claimed elements in independent claim 5 and disputes only motivations to combine. 1616 Pet. Reply 2. Patent Owner, however, contends that Petitioner has not met its burden to demonstrate that the references relied upon "teach the claims of the '379 and/or that there was a motivation to combine the cited references." *See, e.g.*, PO Resp. 2; *see also id.* at 17 ("[E]ven if Petitioner's proposed modifications were made, the result would fail to meet the claimed elements of the '379."). In any event, even if Patent Owner were silent, that does not alleviate Petitioner of its burden of proof. 35 U.S.C. § 316(e).

The parties have briefed the same or similar issues in the related proceedings. *See e.g.*, 1615 PO Resp. 53–56; 1617 PO Resp. 47–50; IPR2016-01613, Paper 52, 29–31, 41–43; IPR2016-01613, Paper 70, 8–14, 23–29. Our findings and conclusions regarding claim 5 of the '379 Patent are consistent with the other '379 Patent independent claims reciting

"modular artificial tree" and consistent with claim 5 of the '056 Patent reciting "tree portion."

As discussed *supra* in Section II.D.1.a, Petitioner points to Hicks for teachings relating to "modular artificial tree," "a first tree section including a first elongated trunk…a plurality of branches coupled to the first trunk, and a first plurality of lights," and "a second tree section including a second elongated trunk, a plurality of branches coupled to the second trunk and a second plurality of lights," recited in claim 5.[23] 1616 Pet. 26–29. As Petitioner acknowledges, Hicks teaches "a center pole" with "'multiple sections,'" and each section has cavities for receiving branches. *Id.* (citing Ex. 1006 ¶¶ 21, 22, Figs. 2, 4, 5). Hicks teaching of "center pole 12" comprising "multiple cavities 16 for receiving branches 18 therein" describes a structure that requires adding branches separately from the trunk. Ex. 1006 ¶ 21, Figs. 4, 5. The Hicks center pole 12 is either one continuous pole or can be assembled in full as a pole with no branches, indicating that the trunk and branches are not part of a modular tree section. Indeed, Mr. Wood testifies that Hicks has detachable branches in support of his and Petitioner's proposed construction. Ex. 1100 ¶ 25 (citing *e.g.*, Ex. 1006 ¶ 11). Petitioner has not shown that Hicks satisfies the modular

[23] In addition to reciting "modular artificial tree" in its preamble, claim 5 further recites "a first tree section including a first elongated trunk…a plurality of branches coupled to the first trunk, and a first plurality of lights," as well as "a second tree section including a second elongated trunk, a plurality of branches coupled to the second trunk and a second plurality of lights." Ex. 1001, 24:51–60. We determine that the broadest reasonable interpretation in light of the '379 Patent Specification of these recitations is the same as those set forth for "tree portion" in the related proceeding. *See* 1610 Final Dec. § III.A.

artificial tree limitation or the first and second tree section limitations, in accordance with the broadest reasonable interpretation of those terms, as discussed *supra* in Sections II.A.2 and II.A.3.

Additionally, although not relied on by Petitioner, as discussed *supra* Section II.C.1 with respect to claim 1, Petitioner has not addressed how DeVicaris's trunk sections form part of a modular artificial tree. The DeVicaris tree has branches that have to be added separately from the trunk portions—they are not a part of a trunk-branch-light module in the manner required by the claim. Ex. 1004, Figs. 1, 2. As illustrated, the DeVicaris trunk can be assembled in whole without having assembled the branches, indicating that the trunk and branches are not part of a modular tree section as claimed, and do not comprise a first or second tree section, as recited in claim 5. *See id.*

Accordingly, we are not persuaded that Petitioner has addressed the following limitations recited in claim 5: "modular artificial tree," "a first tree section including a first elongated trunk…a plurality of branches coupled to the first trunk, and a first plurality of lights," and "a second tree section including a second elongated trunk, a plurality of branches coupled to the second trunk and a second plurality of lights." Petitioner does not offer additional persuasive contentions or evidence with respect to claim 5 that remedy the aforementioned deficiencies and the deficiencies discussed with respect to claim 1.

c. Conclusion—Claim 5

Accordingly, based on the evidence in the entire trial record, for the aforementioned reasons, we determine that Petitioner has not demonstrated

by a preponderance of the evidence that claim 5 is unpatentable under § 103(a) as obvious over Hicks, DeVicaris, and Raymond.

2. Dependent Claims 10, 11, and 15–17

Petitioner asserts that claim 10 would have been obvious over Hicks, DeVicaris, and Raymond; claims 11 and 16 would have been obvious over Hicks, DeVicaris, Raymond, and Lessner; and claims 15 and 17 would have been obvious over Hicks, DeVicaris, Raymond, and Korengold. Petitioner's grounds with respect to these references do not cure the underlying deficiencies addressed above.

Claims 11 further recites "wherein the first wiring harness is detachably coupled to the first trunk connector." Ex. 1001, 25:45–47. Claim 16 depends from claim 11 and further recites "wherein the first wiring harness is detachably coupled to the first trunk connector inside the first trunk cavity." *Id.* at 25:61–63. These additional features are the same as the additional recitations of claims 8 and 13, respectively, and like claims 8 and 13, Petitioner relies on Lessner's teachings.

Claims 15 and 17 recite "interference fit" and "wherein the first trunk connector is insertable . . . at a plurality of rotational alignment positions . . . comprising four or more rotational alignment positions" respectively. For these additional features, like claims 1 and 12, Petitioner points to Korengold's connector. Petitioner's contentions for claims 15 and 17, however, do not cure the underlying deficiencies addressed above with respect to claims 1 and 12.

Accordingly, based on the evidence in the entire trial record, for the aforementioned reasons, we determine that Petitioner has not demonstrated

by a preponderance of the evidence that (1) claim 10 is unpatentable under § 103(a) as obvious over Hicks, DeVicaris, and Raymond; (2) claims 11 and 16 are unpatentable under § 103(a) as obvious over Hicks, DeVicaris, Raymond, and Lessner; and (3) claims 15 and 17 are unpatentable under § 103(a) as obvious over Hicks, DeVicaris, Raymond, and Korengold.

E. The DeVicaris and Lessner Grounds (Independent Claim 28 and Dependent Claims 29 and 32)

1. Claim 28

Petitioner asserts that claim 28 is unpatentable in view of DeVicaris and Lessner. 1617 Pet. 15–33. Like claim 1, claim 28 recites a modular artificial tree including trunk portions and wiring provided inside the trunk. Claim 28 also includes limitations specifying that an electrical contact set is detachably connected to a wiring harness within a cavity of the trunk body. Petitioner asserts that DeVicaris teaches many of the elements of claim 28 relying on teachings in DeVicaris that are the same as those identified and discussed above with respect to claim 1. *Compare id.* at 15–33 *with* 1615 Pet. 10–15, 18–47. Like claim 1, the disputes between the parties pertain to whether DeVicaris teaches a modular artificial tree, as well as whether Petitioner has provided sufficient reason to combine the teachings of the asserted references. *See generally* 1617 PO Resp. Petitioner does not offer persuasive contentions with respect to claim 28 that remedy the deficiencies discussed with respect to claim 1 and the recitation of "modular artificial tree."

2. Claims 29 and 32

Petitioner contends that claims 29 and 32 would have been obvious

over DeVicaris, Lessner, and Korengold. Petitioner asserts that each of claims 29 and 32 recites the modular artificial tree of claim 28 with additional features related to securing the connector in any rotational alignment, recited in claim 29, and forming an interference fit, recited in claim 32. 1617 Pet. 34–35. For these additional features, like claims 1 and 12, Petitioner points to Korengold's connector. *Id.* at 33–46. Petitioner's contentions for claims 29 and 32 do not remedy the underlying deficiencies noted with respect to claims 1, 12, or 28 addressed above.

3. Conclusion—Claims 28, 29, and 32

Accordingly, based on the evidence in the entire trial record, for the aforementioned reasons, we determine that Petitioner has not demonstrated by a preponderance of the evidence that (1) claim 28 is unpatentable under § 103(a) as obvious over DeVicaris and Lessner; or (2) claims 29 and 32 are unpatentable under § 103(a) as obvious over DeVicaris, Lessner, and Korengold.

III. MOTIONS AND OTHER PAPERS

A. PATENT OWNER'S OBSERVATIONS

Patent Owner filed Motions for Observations relating to the cross-examination testimony of Petitioner's Reply declarant, Mr. Wood. *See, e.g.*, IPR2016-01615, Paper 55. To the extent Patent Owner's Observations pertain to testimony purportedly impacting Mr. Wood's credibility, we have considered Patent Owner's observations and Petitioner's responses in rendering this Final Written Decision, and accorded Mr. Wood's testimony appropriate weight in view of Patent Owner's observations and Petitioner's responses to those observations.

B. PATENT OWNER'S MOTIONS TO EXCLUDE

Patent Owner seeks to exclude portions of Mr. Wood's Declarations in support of Petitioner's Opposition to Patent Owner's Motions to Amend, a Declaration submitted in related proceedings, as well as portions of the transcript of the inventor of the '379 Patent, Mr. Chen. *See* IPR2016-01615, Paper 57; IPR2016-01616, Paper 58; IPR2016-01617, Paper 62. We decline to exclude any of this testimonial evidence and, instead, give the evidence more or less persuasive value depending on the degree to which the testimony is supported by reasoning, fact, and the declarant's expertise.

C. PATENT OWNER'S MOTIONS TO AMEND

Patent Owner filed contingent Motions to Amend in each of the instant proceedings. *See* IPR2016-01615, Paper 64; IPR2016-01616, Paper 66; IPR2016-01617, Paper 70; *see also* Tr. 85:12–14 (Patent Owner confirms motion to amend is contingent). As discussed above, we have determined that Petitioner has not demonstrated by a preponderance of the evidence that any of the challenged claims are unpatentable. Accordingly, Patent Owner's Motions to Amend are *dismissed* as moot.

IV. CONCLUSION

Petitioner has not demonstrated by a preponderance of the evidence that (1) claims 1, 2, 6, and 12 of the '379 Patent are unpatentable, under 35 U.S.C. § 103, over DeVicaris and Korengold; (2) claim 3 of the '379 Patent is unpatentable, under 35 U.S.C. § 103, over DeVicaris, Korengold, and Raymond; (3) claim 4 of the '379 Patent is unpatentable, under 35 U.S.C. § 103, over DeVicaris, Korengold, and Yang; and (4) claims 8, 13, and 14 of the '379 Patent are unpatentable, under 35 U.S.C. § 103, over

DeVicaris, Korengold, and Lessner. Petitioner also has not demonstrated by a preponderance of the evidence that (1) claims 5 and 10 of the ’379 Patent are unpatentable, under 35 U.S.C. § 103, over Hicks, DeVicaris, and Raymond; (2) claims 11 and 16 of the ’379 Patent are unpatentable, under 35 U.S.C. § 103, over Hicks, DeVicaris, Raymond, and Lessner; (3) claims 15 and 17 of the ’379 Patent are unpatentable, under 35 U.S.C. § 103, over Hicks, DeVicaris, Raymond, and Korengold; (4) claim 28 is of the ’379 Patent is unpatentable, under 35 U.S.C. § 103, over DeVicaris and Lessner; and (5) claims 29 and 32 of the ’379 Patent are unpatentable, under 35 U.S.C. § 103, over DeVicaris, Lessner, and Korengold.

Patent Owner’s contingent Motions to Amend are dismissed as moot.

V. ORDER

In view of the foregoing, it is hereby:

ORDERED that claims 1–6, 8, 10–17, 28, 29, and 32 of the ’379 Patent have not been proven to be unpatentable;

FURTHER ORDERED that Patent Owner’s Motions to Amend (IPR2016-01615, Paper 64; IPR2016-01616, Paper 66; IPR2016-01617, Paper 70) are *dismissed* as moot;

FURTHER ORDERED that Patent Owner’s Motions to Exclude (IPR2016-01615, Paper 57; IPR2016-01616, Paper 58; IPR2016-01617, Paper 62) are *denied*; and

FURTHER ORDERED that because this is a Final Written Decision, parties to the proceeding seeking judicial review of the Decision must comply with the notice and service requirements of 37 C.F.R. § 90.2.

VI.

PLENZLER, *Administrative Patent Judge*, DISSENTING:

I disagree with the majority's claim construction and treatment of Petitioner's challenges, and, therefore, also the ultimate determination that all challenged claims are non-obvious. For at least these reasons, I do not join the majority decision, and respectfully *dissent*. Accordingly, I would reach the additional issues in these cases, including the various motions to amend, which the majority does not reach.

I discuss, specifically, only those issues addressed by the majority, and only to the extent necessary to explain my disagreement.

A. Background

Because much of the disagreement focuses on the understanding of "modular artificial tree" and the relevance of the construction of that term to the teachings of DeVicaris and Hicks[24], I begin with a simple discussion comparing the structure discussed relative to the artificial tree from the '379 patent with that disclosed in DeVicaris and Hicks.

Figure 2 from the '379 patent, Figures 2 and 4 from DeVicaris, and Figures 2 and 3 from Hicks are each reproduced below.

[24] Patent Owner does not allege, in any of these proceedings, that the tree in Hicks is not a "modular artificial tree."

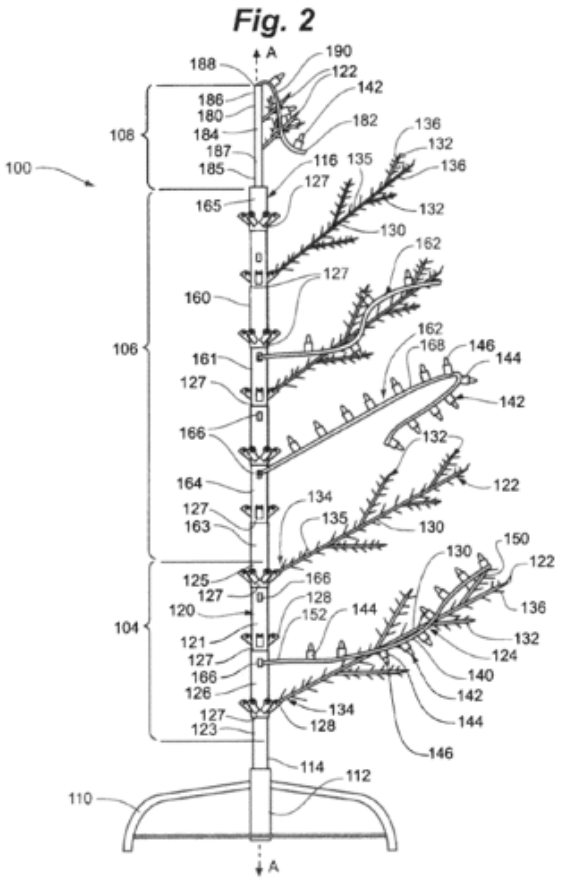

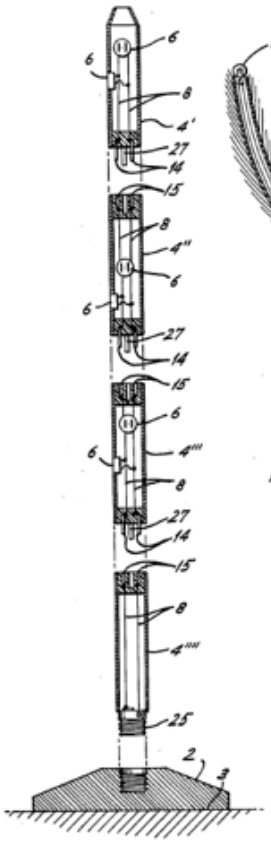

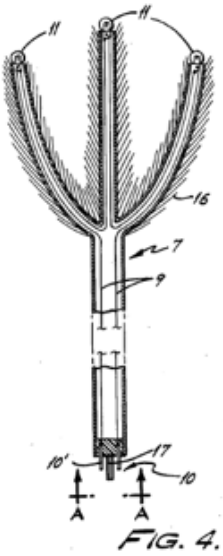

Figure 2 from the ’379 patent (left) is a front view of its artificial tree in a partially assembled state. Ex. 1001, 6:15–16. Figure 2 of DeVicaris (center) is a section view of its artificial tree and Figure 4 of DeVicaris (right) is a plan view of the artificial tree limb for the tree in Figure 2. Ex. 1004, 3:7–9, 3:13–14.

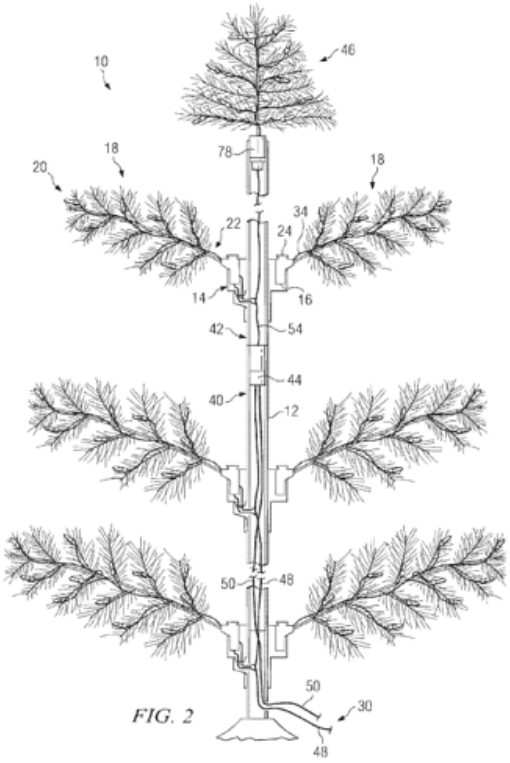

FIG. 2

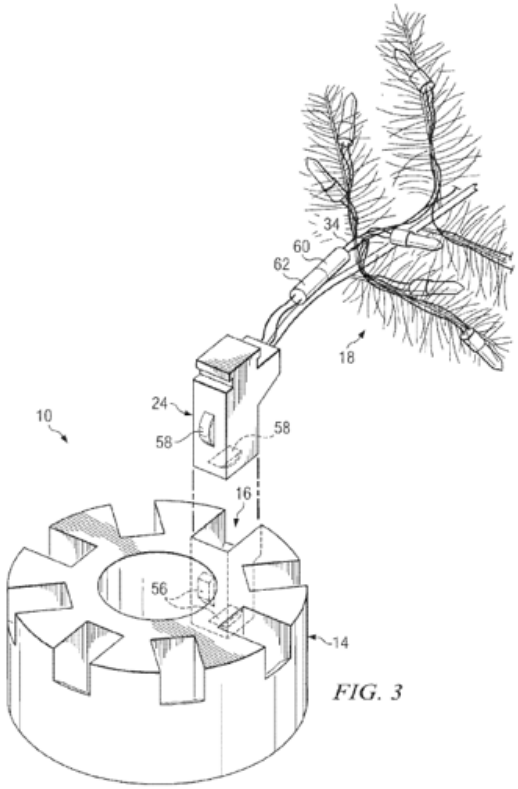

FIG. 3

Figure 2 of Hicks "is a cross-sectional view of an illuminated artificial tree and Figure 3 "is a perspective view of a branch being attached to a mount in the [tree] illustrated in FIG. 2." Ex. 1006 ¶¶ 14–15.

The trees in the '379 patent, DeVicaris, and Hicks each include multiple trunk portions that can be disassembled from one another, electrical connectors/conduits in those trunk portions, branches that are removable from those trunk portions, and lights located on the branches. In fact, these trees are remarkably similar to one another.

B. Analysis

1. Claim Construction

A number of claim terms are in dispute and relevant to the discussion of Petitioner's challenges. 1615 PO Resp. 14–16 (construing "modular

artificial tree" and "interference fit"); 1616 PO Resp. 14–15 (construing only "interference fit"); 1617 PO Resp. 12–14 (construing "modular artificial tree" and "interference fit"); 1615 Pet. Reply 6–12; 1616 Pet. Reply 9–12; 1617 Pet. Reply. 2–9.

a. "modular artificial tree"

The preamble of each claim recites a "modular artificial tree." Patent Owner contends that "modular artificial tree" means "a tree constructed of modular portions, each modular portion being a separate tree section." 1615 PO Resp. 14.[25] Patent Owner's construction, however, includes essentially no explanation as to any structural requirement, simply a conclusion that the "modular artificial tree" preamble requires a tree made of separable tree sections that include branches and trunk portions," with a string cite to various portions of the Specification. *Id.* at 14–15. Petitioner responds that "modular artificial tree" is non-limiting, but even if it limited the claim, it would simply require "an artificial tree with elements capable of being easily joined or arranged with other parts or units." 1615 Pet. Reply 7–9. The majority adopts Patent Owner's construction. Maj. Op. 20. I do not agree with the construction set forth by Patent Owner and the majority.

Regardless of the particular construction of "modular artificial tree," however, the dispute surrounding this limitation is based on whether DeVicaris has a "modular artificial tree" in IPR2016-01615 and IPR2016-01617, as Petitioner cites Hicks as teaching a "modular artificial tree" in IPR2016-01616, and Patent Owner does not dispute those contentions. The dispute concerning DeVicaris concerns whether the connection between the

[25] The proposed construction is the same in IPR2016-01617.

branches and trunk make the artificial tree in DeVicaris something other than "modular." *See* 1615 PO Resp. 53–56; 1617 PO Resp. 47–50.

I do not need to construe expressly the preamble "modular artificial tree" to resolve the dispute between the parties. *Vivid Techs., Inc. v. Am. Sci. & Eng'g, Inc.*, 200 F.3d 795, 803 (Fed. Cir. 1999) (Only those terms that are in controversy need to be construed, and only to the extent necessary to resolve the controversy.). Rather, I can accept that the preamble requires branches, as well as a particular way in which those branches are attached to trunk portions, based on Patent Owner's own concession from related proceedings that a "snug fit" meets the purported connection required between the branches and trunk of a "modular artificial tree." In IPR2016-01610, when explaining why the asserted art does not teach the connection between branches and a trunk allegedly required by the claims, Patent Owner expressly acknowledges that a "snug fit" meets the requirements of the connection between branches and trunk portions of a "tree portion" (*see* IPR2016-01610, Paper 59, 50 ("A POSA could readily see that there is no ***snug fit***, latch, pin, hinge, or other device to secure fasten, affix, or join the two articles" (emphasis added))), which the majority notes is described in the Specification as being part of a "modular artificial tree." *See* Maj. Op. 12–13.

Accordingly, I determine that any particular connection between the branches and trunk required by the "modular artificial tree" preamble includes a "snug fit" connection between those parts.

b. "interference fit"

Claims 12, 15, and 32 each recite an "interference fit" between a trunk connector and a trunk body. As the majority notes, "[a]t the institution

stage, [the panel] determined no express construction of 'interference fit' was needed because we were persuaded that the teachings of the asserted art are sufficiently similar to the examples described in the '379 Patent Specification of exerting force to create an interference fit." Maj. Op. 20 (citing 1615 Dec. 5–6).

The examples cited in that institution decision describe a number of scenarios that are *not* in contrast to an interference fit being a "snug fit" or "a fit between components of substantially equivalent size." *See* 1615 Dec. 6 (citing Ex. 1001, 12:66–13:2, 13:62–65, 15:19–21, 16:2–3). Those portions of the Specification explain, for example, that when "body-tapered embodiments of insert 252 . . . [are] inserted into cavity 268, force is exerted onto contact set 250 such that plug 254, insert 252 and contact 250 are held together forming an interference fitment." Ex. 1001, 12:65–13:1; *see also id.* at 13:62–65 (describing a similar tapered arrangement). This sounds like the description of a "snug fit" where an outer diameter of the tapered region of insert 252 that contacts the cavity 268 has a "'substantially equivalent' size" as the inside diameter defined by that cavity. Moreover, as Petitioner notes (1615 Pet. Reply 11), Patent Owner's own positions, taken in related proceedings, support this understanding of "interference fit." *See* Ex. 1111, 109 (explaining that because "[t]he outer surface of the first trunk connector is roughly the same circumference as the first elongate trunk body . . . an interference fit is formed"), 143–144 (providing similar explanation); *see also* Ex. 1112, 96–97 (describing an "interference fit" in a similar manner).

The description of "interference fit" in the '379 patent, as well as Patent Owner's assertions regarding that term in related proceedings, support the position taken in the institution decision noted above, that the

teachings of the asserted art are sufficiently similar to the examples described in the ’379 Patent Specification of exerting force to create an “interference fit.”

For purposes of these proceedings, taking all of the evidence before us into consideration, an “interference fit” includes “a fit between components of substantially equivalent size,” or a “snug fit.”

C. Challenges

The challenges are different across the three proceedings addressed in this final decision. IPR2016-01615 includes challenges to claims 1–4, 6, 8, and 12–14 and IPR2016-01617 includes challenges to claims 28, 29, and 32, with each of those challenges based on the teachings of DeVicaris in combination with various other references. 1615 Dec. 27; 1617 Dec. 18. IPR2016-01616 includes challenges to claims 5, 10, 11, and 15–17 based on the teachings of Hicks in combination with various other references. 1616 Dec. 29.

I find Petitioner’s contentions with respect to the challenged claims persuasive, particularly where many of those contentions are not disputed, or even acknowledged, by Patent Owner. The majority decision addresses only claims 1, 5, and 12 with any degree of specificity. Accordingly, I address below only those claims and the issues specifically discussed by the majority.

2. IPR2016-01615

a. Claim 1

With respect to claim 1, the majority decision focuses on the recitation of “modular artificial tree” in the preamble, whether Korengold is analogous

art, and whether Petitioner provided sufficient rationale to combine Korengold's teachings with those of DeVicaris.

(1) "modular artificial tree"

Even assuming the preamble requires branches and a particular connection between those branches and a corresponding trunk portion, the real dispute between the parties, as noted above, is whether the branches in DeVicaris are coupled to the trunk in the manner allegedly required by a "modular tree portion." They are, as evidenced by Patent Owner's own contentions.[26]

For the reasons explained above, which Patent Owner cannot reasonably dispute, the alleged coupling requirement between the branches and trunk is met by a "snug fit" between those components. DeVicaris describes its branches as being "connected to the trunk via electrical connectors." Ex. 1004, 4:62–63. It seems unreasonable that an electrical connection would be one that is "a sleeving or placement of branch within a

[26] To the extent the majority implies that a pivot connection is required, I disagree for the reasons noted above in the discussion of claim construction, and note that additional evidence exists to support that a pivot connection is not a requirement. Claim 1, for example, does not recite "branches," let alone any "particular way" those branches are connected to trunk portions. In fact, claim 9, which ultimately depends from claim 1, adds those branches to the claim, as well as their connection (a pivot connection) to the trunk portion, and another of Patent Owner's patents (U.S. Patent No. 9,044,056 B2) at issue in the related IPR2016-01613 proceeding, which shares a common description of the relevant "modular artificial tree," expressly contemplates arrangements where a pivot connection is not required. *See* IPR2016-01613, Ex. 1001, 5:63–6:5 (noting that "other means [can be used] to attach[] branches to trunk sections" after describing the pivot coupling example).

socket or hole such that they are readily removable or could fall out," as Patent Owner contends. 1615 PO Resp. 55. Moreover, to the extent there is any debate as to evidence concerning the engagement provided by an electrical connector, DeVicaris, itself, when describing the prior art, explains that "limbs . . . hav[ing] . . . male-type electrical connector[s] . . . ***fit[] snugly*** into a female-type socket[s] on the trunk." Ex. 1004, 1:67–2:2 (emphasis added).

Accordingly, DeVicaris teaches a "modular artificial tree," even under Patent Owner's construction.

(2) Proposed Combination

Initially, it is worth taking a step back and evaluating what, exactly, Petitioner proposes in its combination of Korengold's teachings with those of DeVicaris. Petitioner cites DeVicaris as "teach[ing] almost every element of Claim 1, including trunk connectors," but notes that "while the connectors of DeVicaris are disposed in the ends of the tubular trunk sections, DeVicaris does not explicitly teach how its trunk connectors are secured in respective trunk bodies." *See, e.g.*, 1615 Pet. 18. An enlarged portion of Figure 2 from DeVicaris is reproduced below.

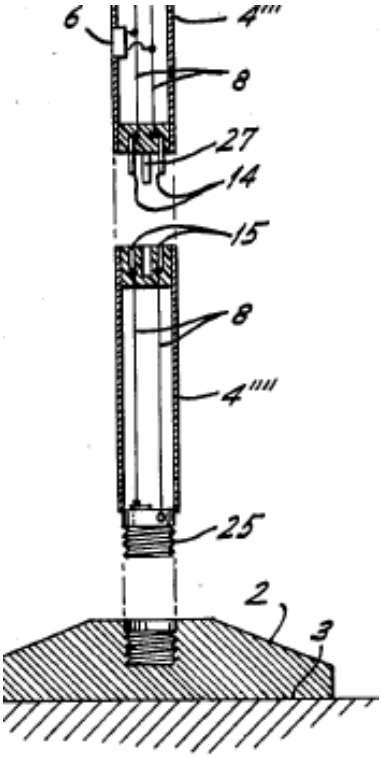

FIG. 2.

Figure 2 of DeVicaris is a sectional view of its artificial tree. Ex. 1004, 3:7–9. Upon simple inspection of the Figures of DeVicaris, is seems within reason to conclude those connectors are secured in the conduit via an interference fit, or at least some manner that would allow for orientation in the "at least four rotational alignment positions" recited in claim 1.[27]

Petitioner simply cites Korengold as evidence that an interference fit connection (which would provide the at least four rotational positions required by claim 1) in such an arrangement was well known, and use of such an arrangement would simplify assembly. *See, e.g., id.* at 19–22. I do not know that much evidence is required for such an unremarkable

[27] Claim 1 does not require an interference fit.

proposition. Indeed, such a contention appears to be beyond reasonable dispute. Nevertheless, Petitioner provides Korengold as evidence to support that position.

Korengold "relates in general to electrical connectors and has for its primary objects the provision of an electrical connector which may be readily pulled apart and reconnected with exceptional ease and facility." Ex. 1005, 1:1–5.[28] Figure 1 of Korengold illustrates the electrical connector and is reproduced below.

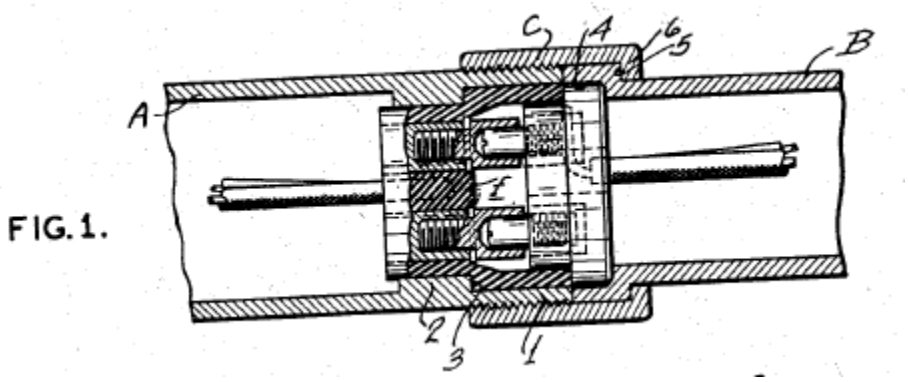

Figure 1 is a sectional view of an electrical connector in a conduit pipe. Korengold explains that "[f]ormed of . . . rubber . . . for snug-fitting removable disposition within connector-socket 3 [of the conduit], is a female connector member 7." *Id.* at 2:7–11. Petitioner references this discussion from Korengold in addressing whether it is reasonably pertinent to the problem faced by the inventor of the '379 patent. 1615 Pet. Reply 6. The majority determines that Petitioner has failed to provide sufficient rationale for the proposed combination. I disagree and, although not discussed specifically, would also determine that Korengold is analogous art.

[28] My citations are to the columns of Korengold, rather than page numbers, as the line numbering restarts at each column.

As for the rationale for combining Korengold's teachings with those of DeVicaris, Petitioner cites DeVicaris as "teach[ing] almost every element of Claim 1, including trunk connectors," but notes that "while the connectors of DeVicaris are disposed in the ends of the tubular trunk sections, DeVicaris does not explicitly teach how its trunk connectors are secured in respective trunk bodies." *See, e.g.*, 1615 Pet. 18. Petitioner simply cites Korengold as evidence that an interference fit connection (which would provide the at least four rotational positions required by claim 1) in such an arrangement was well known, and use of such an arrangement would simplify assembly. *See, e.g.*, *id.* at 19–22. Petitioner makes this very clear in its Reply, and correctly notes that Patent Owner nowhere disputes the rationale provided for that proposed modification. *See* 1615 Pet. Reply 15 (noting that "PO argues against the combination with arguments for why a POSA would not bodily incorporate Korengold's connector into DeVicaris' artificial tree" and "does not refute Petitioner's [actual] proposed combination").

Rather than addressing the contentions presented by Petitioner, Patent Owner's arguments appear to be directed to a fictional requirement of *replacing* the connector of DeVicaris with that of Korengold. *See* 1615 PO Resp. 25–26 (discussing "[t]he addition of a Korengold connector on a modular artificial tree").

Petitioner's contentions and unrebutted rationale for modifying the teachings of DeVicaris with those of Korengold are persuasive.

b. Claim 12

Claim 12 depends from claim 1 and further recites that "the first trunk connector forms an interference fit with the first elongated trunk body." The

majority acknowledges that "Korengold teaches a 'snug-fitting' removable disposition' with 'shank portion 8 being of external diametrical size substantially equivalent to the internal diametrical size of the annular shoulder 2.'" Maj. Op. 51 (citing Ex. 1005, 2:6–19). I agree with that characterization of Korengold. It is unnecessary to discuss this claim further, as that teaching corresponds exactly to my construction of "interference fit," which, as explained above, Patent Owner proffers in related proceedings.

According, I am persuaded by Petitioner's contentions in connection with claim 12. *See* 1615 Pet. 44.

3. IPR2016-01616

Claim 5 is independent, and challenged in IPR2016-01616. As noted above, that challenge relies primarily on Hicks. As Petitioner notes (1616 Pet. Reply 8–9), Patent Owner does not address the challenge to this claim. Nevertheless, the majority determines that Petitioner has failed to establish unpatentability of claim 5. Maj. Op. 60–62. My disagreement is based on the evidence and argument before us, not simply because Patent Owner chose not to respond.

The majority determines that Petitioner has failed to establish claim 5 is unpatentable over the combination of Hicks and DeVicaris because

> The Hicks center pole 12 is either one continuous pole or can be assembled in full as a pole with no branches, indicating that the trunk and branches are not part of a modular tree section . . . [and] Petitioner has not shown that Hicks satisfies the modular artificial tree limitation or the first and second tree section limitations, in accordance with the broadest reasonable interpretation of those terms.

Maj. Op. 61–62.

> Petitioner has not addressed how DeVicaris's trunk sections form part of a modular artificial tree. The DeVicaris tree has branches that have to be added separately from the trunk portions. Ex. 1004, Figs. 1, 2. As illustrated, the DeVicaris trunk can be assembled in whole without having assembled the branches, indicating that the trunk and branches are not part of a modular tree section, and do not comprise a first or second tree section, as recited in claim 5.

Id. at 62.

My disagreement with this position is clear from the claim construction discussion, as well as the discussion of the challenge to claim 1. Petitioner's unrebutted contentions in connection with claim 5 are persuasive. *See* 1616 Pet. 19–45.

The majority's position with respect to claims 15 and 17, which depend from claim 5 is similar to that in connection with claim 12, and my disagreement with that position is the same as discussed above relative to claim 12.

4. IPR2016-01617

The majority addresses claim 28, noting "[l]ike claim 1, the disputes between the parties pertain to whether DeVicaris teaches a modular artificial tree, as well as whether Petitioner has sufficiently shown that the asserted art is analogous art and provided sufficient reason to combine the teachings of the asserted references." Maj. Op. 59. The majority's position, as well as my disagreement with that position is expressed above in connection with the discussion of claim 1.

PETITIONER:

Christopher Forstner
Paul McGowan
Ryan Schneider
TROUTMAN SANDERS LLP
paul.mcgowan@troutmansanders.com
ryan.schneider@troutmansanders.com
chris.forstner@troutmansanders.com

Jason Eisenberg
STERNE, KESSLER, GOLDSTEIN & FOX PLLC
jasone-ptab@skgf.com

PATENT OWNER:

Larina Alton
Douglas Christensen
CHRISTENSEN FONDER P.A
alton@cfpatlaw.com
christensen@cfpatlaw.com