Trials@uspto.gov
571-272-7822

Paper 14
Date: October 31, 2017

UNITED STATES PATENT AND TRADEMARK OFFICE

BEFORE THE PATENT TRIAL AND APPEAL BOARD

DELL INC.; RIVERBED TECHNOLOGY, INC.; HEWLETT-PACKARD ENTERPRISE CO.; HP ENTERPRISE SERVICES, LLC; TERADATA OPERATIONS, INC.; ECHOSTAR CORPORATION; HUGHES NETWORK SYSTEMS, LLC; ORACLE AMERICA, INC.; and VERITAS TECHNOLOGIES, LLC,
Petitioner,

v.

REALTIME DATA LLC,
Patent Owner.

Case IPR2016-01002[1]
Patent 9,116,908 B2

Before JAMES B. ARPIN, JASON J. CHUNG, and KEVIN C. TROCK, *Administrative Patent Judges*.

CHUNG, *Administrative Patent Judge*.

FINAL WRITTEN DECISION
Inter Partes Review
35 U.S.C. § 318(a) and 37 C.F.R. § 42.73

[1] Cases IPR2016-01672 and IPR2017-00364 have been joined with this proceeding. Paper 53. In our Decision, we refer to the paper numbers from IPR2016-01002.

I. INTRODUCTION

Hewlett-Packard Enterprise Company, HP Enterprise Services, LLC, and Teradata Operations, Inc. (collectively "Petitioner")[2] filed a Petition to institute an *inter partes* review of claims 1, 2, 4–6, 9, 11, 21, 22, 24, and 25 of U.S. Patent No. 9,116,908 B1 ("the '908 patent"). Paper 5 ("Pet."). Realtime Data LLC ("Patent Owner") filed a Preliminary Response pursuant to 35 U.S.C. § 313. Paper 19 ("Prelim. Resp.").

Upon consideration of the Petition and the Preliminary Response, on November 4, 2016, we instituted *inter partes* review of claims 1, 2, 4–6, 9, 11, 21, 22, 24, and 25 ("instituted claims"), pursuant to 35 U.S.C. § 314. Paper 25 ("Dec.").

Subsequent to institution, Patent Owner filed a Corrected Patent Owner Response. Paper 39 ("PO Resp."). Petitioner filed a Reply to Patent Owner's Response. Paper 48 ("Reply"). An oral hearing was held on June 30, 2017, and a transcript of the oral hearing is available in the record. Paper 59 ("Tr.").

We issue this Final Written Decision pursuant to 35 U.S.C. § 318(a) and 37 C.F.R. § 42.73. For the reasons discussed herein, Petitioner has not shown by a preponderance of the evidence that claims 1, 2, 4–6, 9, 11, 21, 22, 24, and 25 of the '908 patent are unpatentable. *See* 35 U.S.C. § 316(e).

A. Related Matters

Petitioner and Patent Owner inform us that the '908 patent is involved in multiple suits in the U.S. District Court for the Eastern District of Texas.

---

[2] The other named petitioners were named in the joined cases. *See supra* n.1.

Pet. 3–4; Paper 11, 2; Paper 14, 1–2. The parties also inform us that the ’908 patent is involved in a suit in the U.S. District Court for the Northern District of California and several *Inter Partes* Review proceedings. Pet. 3–4; Paper 14, 1–2.

B. The Instituted Grounds

We instituted review on the following grounds of unpatentability:

References[3]	**Basis**	**Instituted Claims**
Franaszek[4] and Osterlund[5]	§ 103(a)[6]	1, 9, 11, 21, 22, 24, and 25
Franaszek, Osterlund, and Fall[7]	§ 103(a)	2, 4, 5, and 6

C. The ’908 Patent

The ’908 patent describes systems and methods “for providing accelerated data storage and retrieval utilizing lossless data compression and decompression.” Ex. 1001, Abst. The ’908 patent further describes providing an effective increase of data storage and retrieval bandwidth of a memory storage device. *Id.* at 2:60–62. The data storage and retrieval accelerator method and system reduces the time required to store and retrieve data from a computer to a disk memory device. *Id.* at 3:25–28.

---

[3] Petitioner also relies upon the Declaration of Dr. Charles D. Creusere, Ph.D. Ex. 1002.
[4] U.S. Patent No. 5,870,036, issued Feb. 9, 1999 (Ex. 1004, “Franaszek”).
[5] U.S. Patent No. 5,247,646, issued Sept. 21, 1993 (Ex. 1005, “Osterlund”).
[6] The Leahy-Smith America Invents Act (“AIA”), Pub. L. No. 112-29, 125 Stat. 284, 287–88 (2011), revised 35 U.S.C. § 103, effective March 16, 2013. The ’908 patent was issued prior to the effective date of the AIA. Thus, we apply the pre-AIA version of § 103.
[7] U.S. Patent No. 5,991,515, filed July 15, 1997, issued Nov. 23, 1999 (Ex. 1006, “Fall”).

D. The Instituted Claims

We instituted *inter partes* review of claims 1, 2, 4–6, 9, 11, 21, 22, 24, and 25. Claims 21 and 25 are similar to claim 1, except that claims 21 and 25 are method claims reciting acts that articulate essentially similar limitations as claim 1. Claim 25 and claim 21 recite essentially similar limitations, except that claim 25 "receiv[es] a first and second data block over a communications channel" whereas claim 21 lacks a recitation of "receiving" and "over a communications channel." Claims 1, 21, and 25 are illustrative and reproduced below:

> 1. A system comprising:
>
> a memory device; and
>
> a data accelerator configured to compress: (i) a first data block with a first compression technique to provide a first compressed data block; and (ii) a second data block with a second compression technique, different from the first compression technique, to provide a second compressed data block;
>
> wherein the compressed first and second data blocks are stored on the memory device, and the compression and storage occurs faster than the first and second data blocks are able to be stored on the memory device in uncompressed form.

Ex. 1001, 18:50–62.

> 21. A method for accelerated data storage of data, comprising:
>
> compressing a first data block with a first data compression technique to provide a first compressed data block; and
>
> compressing a second data block with a second data compression technique to provide a second compressed data block, wherein the first data compression technique and the second data compression technique are different;
>
> storing the first and second data compressed blocks on a memory device wherein the compression and storage occurs faster than the first and second data blocks are able to be stored on the

> memory device in uncompressed form.

Id. at 19:60–20:5.

> 25. A method for accelerated data storage of data, comprising:
>
> receiving a first and a second data block over a communications channel;
>
> compressing the first data block with a first data compression technique to provide a first compressed data block; and
>
> compressing the second data block with a second data compression technique to provide a second compressed data block, wherein the first data compression technique and the second data compression technique are different;
>
> storing the first and second data compressed blocks on a memory device wherein the compression and storage occurs faster than the first and second data blocks are able to be stored on the memory device in uncompressed form.

Id. at 20:22–36.

II. ANALYSIS

A. Principles of Law

A claim is unpatentable under 35 U.S.C. § 103(a) if "the differences between the subject matter sought to be patented and the prior art are such that the subject matter as a whole would have been obvious at the time the invention was made to a person having ordinary skill in the art to which said subject matter pertains." *KSR Int'l Co. v. Teleflex Inc.*, 550 U.S. 398, 406 (2007). The question of obviousness is resolved on the basis of underlying factual determinations, including: (1) the scope and content of the prior art; (2) any differences between the claimed subject matter and the prior art; (3) the level of skill in the art; and (4) objective evidence of nonobviousness, i.e., secondary considerations.[8] *See Graham v. John Deere Co. of Kansas*

[8] Patent Owner has not raised arguments or produced evidence of secondary

City, 383 U.S. 1, 17–18 (1966).

A determination of whether a patent claim is invalid as obvious under § 103 requires consideration of all four *Graham* factors, and it is error to reach a conclusion of obviousness until all those factors are considered." *Apple v. Samsung Elecs. Co., Ltd.*, 839 F.3d 1034, 1048 (Fed. Cir. 2016) (en banc) (citations omitted). "This requirement is in recognition of the fact that each of the *Graham* factors helps inform the ultimate obviousness determination." *Id.*

"In an [*inter partes* review], the petitioner has the burden from the onset to show with particularity why the patent it challenges is unpatentable." *Harmonic Inc. v. Avid Tech., Inc.*, 815 F.3d 1356, 1363 (Fed. Cir. 2016) (citing 35 U.S.C. § 312(a)(3) (requiring *inter partes* review petitions to identify "with particularity . . . the evidence that supports the grounds for the challenge to each claim")). This burden of persuasion never shifts to Patent Owner. *See Dynamic Drinkware, LLC v. Nat'l Graphics, Inc.*, 800 F.3d 1375, 1378 (Fed. Cir. 2015) (discussing the burden of proof in *inter partes* review). Furthermore, Petitioner cannot satisfy its burden of proving obviousness by employing "mere conclusory statements." *In re Magnum Oil Tools Int'l, Ltd.*, 829 F.3d 1364, 1380 (Fed. Cir. 2016).

Thus, to prevail in an *inter partes* review, Petitioner must explain how the proposed combinations of prior art would have rendered the challenged claims unpatentable. At this final stage, we determine whether a preponderance of the evidence of record shows that the challenged claims would have been obvious over the proposed combinations of the teachings

---

considerations in this proceeding.

of prior art references.

We analyze the instituted grounds of unpatentability in accordance with the above-stated principles.

B. Level of Ordinary Skill in the Art

In determining the level of ordinary skill in the art, various factors may be considered, including the "type of problems encountered in the art; prior art solutions to those problems; rapidity with which innovations are made; sophistication of the technology; and educational level of active workers in the field." *In re GPAC, Inc.*, 57 F.3d 1573, 1579 (Fed. Cir. 1995) (internal quotation and citation omitted). In that regard, Petitioner's declarant, Dr. Creusere, testifies that a person with ordinary skill in the art at the time of the invention

> would have had at least a bachelor's degree in computer science, computer engineering, electrical and computer engineering, electrical engineering, or electronics and at least two years of experience working with data compression or a graduate degree focusing in the field of data compression. Such experience would have led to familiarity with data compression systems using multiple data compression and decompression techniques to increase data storage and retrieval bandwidth. As such, individuals with additional education or additional industrial experience could still be of ordinary skill in the art if that additional aspect compensates for a deficit in one of the other aspects of the requirements stated above

Ex. 1002 ¶ 26.

Patent Owner confirms that Petitioner's statements regarding the level of ordinary skill in the art are partially consistent with Patent Owner's view, but, nonetheless, Patent Owner contends that an ordinarily skilled artisan

would be the "ultimate generalist." Ex. 2017 ¶¶ 16–17 (citing Ex. 2015, 84:13–20).

We do not observe a meaningful differences between the parties' assessments of a person of ordinary skill in the art. We further note that either assessment appears consistent with the level of ordinary skill in the art at the time of the invention as reflected in the prior art in the instant proceeding. *See Okajima v. Bourdeau*, 261 F.3d 1350, 1355 (Fed. Cir. 2001). Moreover, Dr. Creusere appears to satisfy either assessment. Our analysis in this Decision is supported by either assessment, but, for purposes of this Decision, we adopt Petitioner's assessment.

C. Claim Construction

Claim terms in an unexpired patent are interpreted according to their broadest reasonable construction in light of the specification of the patent in which they appear. 37 C.F.R. § 42.100(b). Under that standard, and absent any special definitions, we give claim terms their ordinary and customary meaning, as would be understood by one of ordinary skill in the art at the time of the invention. *In re Translogic Tech., Inc.*, 504 F.3d 1249, 1257 (Fed. Cir. 2007).

The parties do not argue a claim construction for any terms. *See generally* PO Resp.; Reply. In the Decision to Institute, we did not construe any terms. Dec. 4–5.

We determine that no terms require express construction for purposes of this Decision. *See Vivid Techs., Inc. v. Am. Sci. & Eng'g, Inc.*, 200 F.3d 795, 803 (Fed. Cir. 1999) (only those claim terms or phrases that are in controversy need to be construed, and only to the extent necessary to resolve the controversy).

D. Alleged Obviousness of Independent Claims 1, 21, and 25

1. Overview of Franaszek (Ex. 1004)

Franaszek relates to systems and methods for compressing and decompressing data blocks using a plurality of optimal encoders. Ex. 1004, at [57]. In Franaszek, representative samples of each block are tested to select an appropriate encoder for the block. *Id.* The data type of incoming data blocks is recognized, and the collection of data blocks are compressed using a plurality of optimal encoders for the different types of data. *Id*. at 4:30–36, 5:49–53. Figure 2 of Franaszek is reproduced below and depicts one embodiment of the Franaszek system.

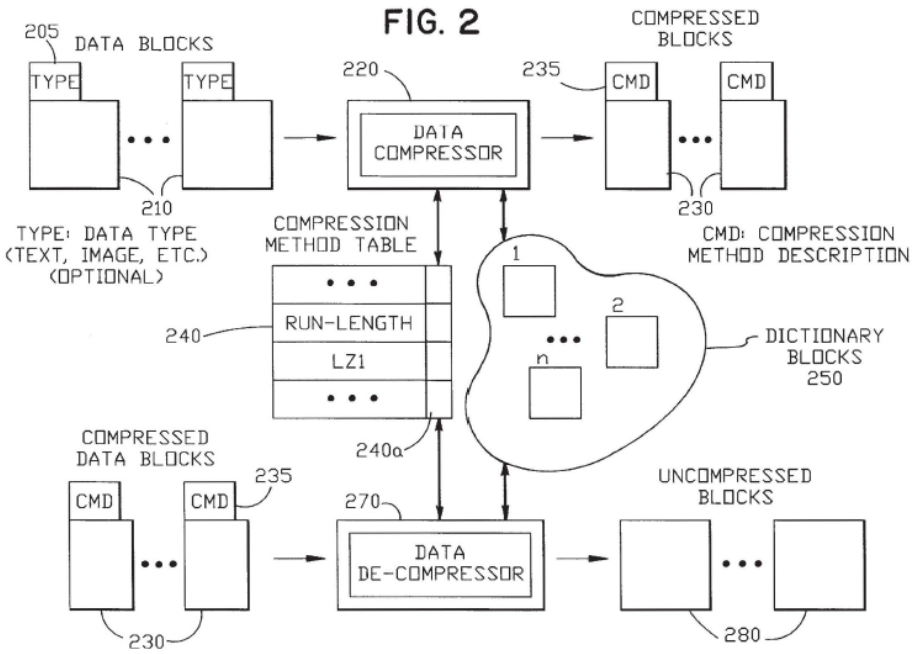

Figure 2 illustrates data compressor 220 and data de-compressor 270, with uncompressed data blocks 210 that may contain type information 205. *Id*. at 4:25–31. According to Franaszek, the type information, for example, may be image data encoded in a given format, source code for a given programming language, etc. *Id*. at 4:32–34. Data blocks 210 are input to

data compressor 220. Data compressor 220 and data de-compressor 270 share compression method table 240 and memory 250 containing a number of dictionary blocks. *Id*. at 4:34–38. Compressor 220 selects a compression method to compress the data. *Id*. at 4:52–53. The compressor outputs compressed data blocks 230, each with compression method description ("CMD") 235 that encodes an index identifying the selected compression method for that block. *Id*. at 4:55–57. De-compressor 270 de-compresses the block using the specified method found in compression method table 240 (using the compression method identifier as an index), and outputs uncompressed data blocks 280. *Id*. at 5:1–7.

2. Overview of Osterlund (Ex. 1005)

Osterlund relates to an optical disk data storage system where a data compression device is interposed between a host computer and an optical disk controller to permit data storage and retrieval operations on an optical disk to occur faster. Ex. 1005, at [57]. As described in Osterlund, host computer 19 formats data for storage, which is received by host computer interface 20. *Id.* at 5:13–15. This raw data is transmitted from the interface to compression/decompression module 25, which compresses the data before it is stored. *Id.* at 5:15–19. An advantage of this configuration, according to Osterlund, is that compression reduces the amount of data to be stored and, thus, reduces the time required to store the data. *Id.* at 5:20–29. Osterlund further states, "[s]ince the compression module is capable of compressing and decompressing data with negligible delay, the device allows the optical disk storage device to have an overall faster rates [sic] of storage data and retrieval." *Id.* at 5:42–46.

3. A Person Having Ordinary Skill in the Art on this Record Could Not Have Had any Reasonable Expectation of Success in Attempting To Combine Franaszek with Osterlund (Claims 1, 21, and 25)

The Supreme Court stated "it can be important to **identify a reason** that would have prompted a person of ordinary skill in the relevant field to **combine the elements in the way the claimed new invention does**." *KSR*, 550 U.S. at 398 (emphases added).

Additionally, the Federal Circuit explained that in order to demonstrate that the challenged claims are obvious, petitioner must articulate "[1] how specific references could be combined, [2] which combination(s) of elements in specific references would yield a predictable result, or [3] how any specific combination would operate or read on the asserted claims." *ActiveVideo Networks, Inc. v. Verizon Commc'ns, Inc.*, 694 F.3d 1312, 1327–28 (Fed. Cir. 2012). Moreover, to invalidate a claim based on obviousness, petitioner must demonstrate "'that a skilled artisan would have been motivated to combine the teachings of the prior art references to achieve the claimed invention, and that the skilled artisan would have had a reasonable expectation of success in doing so.'" *ActiveVideo*, 694 F.3d at 1312 (quoting *Pfizer, Inc. v. Apotex, Inc.*, 480 F.3d 1348, 1361 (Fed. Cir. 2007)).

Therefore, we focus on the parties' arguments pertaining to: (1) how specific references could be combined, which combination(s) of elements in specific references would yield a predictable result, or how any specific combination would operate or read on the asserted claims; which is tethered to point number (2): whether a person having ordinary skill in the art on this record could have had a reasonable expectation of success in attempting to combine the teachings of Franaszek with Osterlund. Pet. 23–28; PO Resp.

14–22, 36–41. Put another way, we find that there is an important connection between point numbers (1) and (2) of the preceding sentence and decline to look at one individual point in a vacuum. Because Petitioner has the burden of proof (*see* 35 U.S.C. § 316(e), 37 C.F.R. § 42.20(c)), we begin with Petitioner's arguments.

In setting up its obviousness theory, Petitioner argues Franaszek does not state expressly that compression and storage occurs faster than said data stream is able to be stored on said memory device in uncompressed form, as required by claims 1, 21, and 25. Pet. 23, 25. Petitioner further argues a person having ordinary skill in the art, nonetheless, would have found the claimed subject matter obvious over the teachings of Osterlund combined with those of Franaszek. *Id.* (citing Ex. 1005, 5:45–48; Ex. 1002 ¶¶ 122, 126).

Petitioner also argues that a person having ordinary skill in the art would have understood Franaszek and Osterlund to be analogous with each other in that they describe systems pertaining to using data compression to improve data storage applications. *Id.* at 26 (citing Ex. 1004, 3:25–28, 4:14–20; Ex. 1005, 5:42–48; Ex. 1002 ¶¶ 105, 127). Furthermore, Petitioner's theory explains how Osterland's teaches a "data compression device" that is "interposed between a host computer and an optical disk controller to permit data storage and retrieval operations . . . to occur at a faster rate than would otherwise be possible'" "'using wide multibit data buses for fast data transfer'" and the use of direct memory access techniques for buffers within the compressor. *Id.* at 23–24 (quoting Ex. 1005, Abst., 4:21–23).

According to Petitioner, Osterlund's arrangement (i.e., data compression device interposed between a host computer and an optical disk

controller) allows the compression module to reduce the amount of data to be stored and results in storing the data faster in memory. *Id.* at 24 (citing Ex. 1005, 5:25–29, 5:42–46). And Petitioner argues that Osterland's compression module is capable of compressing and decompressing data with negligible delay, thereby allowing for overall faster rates of data storage and retrieval. *Id.* (citing Ex. 1005, 5:42–46; Ex. 1002 ¶ 123).

Additionally, Petitioner argues that this application of data compression was a textbook rationale to compress data in data storage systems. *Id.* (citing Ex. 1002 ¶ 123). Petitioner also argues that a person having ordinary skill in the art would have been motivated to modify the teachings of Franazek in view of those of Osterlund to teach or suggest a system in which "'compression and storage occurs faster than said data stream is able to be stored on said memory device in uncompressed form.'" *Id.* at 24–25 (quoting Ex. 1001, 18:59–62; citing Ex. 1002 ¶ 124).

In addition, Petitioner argues in systems in which latency was an important factor, faster data storage and retrieval would have been understood as a way to improve system latency and avoid having the host system reduce data transfer speeds or perform extensive buffering to accommodate slow storage and retrieval. *Id.* at 26–27 (citing *Sakraida v. AG pro, Inc.*, 425 U.S. 273, 282–283 (1976); *Dystar Textilfarben GmbH & Deutschland KG v. C.H. Patrick Co.*, 464 F.3d 1356, 1368–1369 (Fed. Cir. 2006)).

Petitioner argues Osterland's data storage and retrieval is "faster than would otherwise be possible," and a person having ordinary skill in the art would have been led to improve Franaszek in the same way to make

Franaszek's data storage "faster than would otherwise be possible," based on Osterlund's teachings. Pet. 27–28 (citing Ex. 1002 ¶ 126).

Petitioner argues Osterlund's data compression in data storage systems was a routine application. *Id.* at 28 (citing Ex. 1007, 228). In addition, Petitioner argues Osterlund's techniques to improve data storage speed would have been recognized by a person having ordinary skill in the art as a means to improve "similar devices in a similar way," and given the number of different available encoding schemes and known optimizations to data compressors, such as not compressing if the compression ratio is unsatisfactory, a person having ordinary skill in the art would have taken no more work than "the work of a skillful mechanic, not that of the inventor," to arrive at the claimed invention. *Id.* (citing Ex. 1002 ¶¶ 30, 31, 34, 35, 129).

In summary, Petitioner argues that a person having ordinary skill in the art would have found it obvious to modify Franaszek's teaching of a data compression system with Osterlund's teaching of wide data buses, positioning in the data stream, and direct memory access for the benefits of: (1) reducing the data storage amount (*id.* (citing Ex. 1005, 5:20–23)); (2) reducing the data storage time requirement (*id.* (citing Ex. 1005, 5:23–25)); (3) adding minimal compression delay (*id.* (citing Ex. 1005, 5:42–44)); and (4) ensuring data compression resulting in an overall faster data storage rate and retrieval (*id.* (citing Ex. 1005, 5:42–46)).

Moreover, Petitioner argues these benefits would have yielded the desirable result of providing faster and more efficient operation of the computer system that was storing and retrieving the data, which provides for improvement in the end-user experience. *Id.* (citing Ex. 1002 ¶ 127).

Petitioner further argues that this modification also would have allowed Franaszek to store and retrieve more data in a given period of time, allowing for faster bulk data transfers. *Id.* (citing Ex. 1002 ¶ 130).

Petitioner argues because the relevant art is predictable and compression algorithms and transmission times may be modeled, simulated, and easily tested, a person having ordinary skill in the art would have had a reasonable expectation of success in combining the teachings of Franaszek and Osterlund to achieve the claimed invention. *Id.* (citing Ex. 1002 ¶¶ 131–132). We disagree with Petitioner.

In Paragraph 131 of his declaration, Dr. Creusere testifies that:

> A person of ordinary skill in the art would have *expected success* when combining the fast compressor of Osterlund with Franaszek. This is because the compression part of the compression and storage process has the potential to be relatively slow. Thus speeding up a slow part of the process (the compression) would have resulted in speeding up the overall process, as one of ordinary skill in the art would expect.

Ex. 1002 ¶ 131 (emphasis added). And, in paragraph 132, Dr. Creusere testifies that:

> This result would have been not only desirable, as faster computer systems were generally desired (and continue to be for a variety of reasons), but it also would have been entirely expected to achieve a faster system using the combination of teachings. Replacing the slower parts of a compression system or method with faster parts increases speed, in a predictable manner that would have been expected by a person of ordinary skill in the art. Making these adjustments would have required no more than routine skill. The relevant art is predictable. Additionally, because compression algorithms and transmission times could be modeled, simulated, and easily tested, a person of ordinary skill in the art would have had *a reasonable expectation*

> *of success* when combining the teachings of the prior art to arrive at the claimed invention.

Ex. 1002 ¶ 132 (emphasis added).

As discussed *supra*, in *KSR*, the Supreme Court suggests identifying a reason that would have prompted a person of ordinary skill in the relevant field to combine the elements in the way the recited invention does. And because the Federal Circuit explains in *ActiveVideo*: how specific references could be combined, which combination(s) of elements in specific references would yield a predictable result, or how any specific combination would operate or read on the asserted claims (*supra*), we find Dr. Creusere's testimony is conflicting with the aforementioned requirements under *ActiveVideo*.

In particular, Dr. Creusere acknowledges that he does not specify whether a person having ordinary skill in the art would keep or discard Franaszek's sampling approach, or would use only Franaszek's compression algorithms or incorporate other algorithms. *Id.* at 75:18–76:11, 126:20–127:1. Also significant is Dr. Creusere's repeated testimony that a person having ordinary skill in the art would not incorporate Osterlund's compression algorithm into Franaszek, or incorporate Franaszek's compression algorithms into Osterlund. *Id.* at 43:3–11, 94:13–95:4.

Furthermore, Dr. Creusere does not have an opinion about whether using Osterlund's compression algorithm as part of Franaszek's compression method would increase Franaszek's compression speed. *Id.* at 94:4–12. Moreover, Dr. Creusere cannot state whether his hypothetical person having ordinary skill in the art would modify Franaszek's set of existing compression techniques at all, and, if so, what techniques the person having

ordinary skill in the art would even consider. *Id.* at 96:4–98:14. Also notable is Dr. Creusere's failure to indicate whether combination of the teachings of Franaszek and Osterlund would apply to some data types or all data types. *Id.* at 142:5–10, 143:12–19.

Put another way, we do not find that Petitioner demonstrates a "reasonable expectation of success" when Dr. Creusere acknowledges that a person having ordinary skill in the art did not specify whether to discard or keep Franaszek's sampling approach, or would use only Franaszek's teachings of compression algorithms, or incorporate other such algorithms, or what data type or data types an intended system teaches would be created to compress, or what specific goals and objectives the person having ordinary skill in the art would have had reason to achieve. *Compare id.* at 75:18–76:19, 126:20–127:1, 76:24–78:6, 94:4–12, 96:4–98:14 *with* Ex. 1002 ¶¶ 121–134; Ex. 2017 ¶¶ 165–167.

Instead, Petitioner simply asserts, in a conclusory manner, that "[b]ecause the relevant art is predictable and compression algorithms and transmission times may be modeled, simulated, and easily tested, a person of ordinary skill in the art would have had *a reasonable expectation of success* in combining these various teachings found in the prior art to arrive at the claimed invention" (emphasis added). Pet. 28 (citing Ex. 1002 ¶¶ 131–132). Notably, Dr. Creusere acknowledges that the number of possible permutations faced by a person having ordinary skill in the art would have been "unlimited" and that it was "impossible" for him to address "all the permutations of those possibilities." *Id.* at 81:21–83:24, 84:13–24, 143:20–144:3.

Although Dr. Creusere opines that a person having ordinary skill in the art would have a reasonable expectation of success (Ex. 1002 ¶¶ 131–132), on this record, we cannot reconcile paragraphs 131–132 of his declaration when faced with the plethora of his own testimony on cross-examination to the contrary, such as his acknowledgement of "unlimited" permutations that were "impossible" to address. *E.g.*, Ex. 2015, 81:21–83:24, 84:13–24, 143:20–144:3. Stated differently, in his initial position, Dr. Creusere testifies a person having ordinary skill in the art would have a reasonable expectation of success (Ex. 1002 ¶¶ 131–132), while his later testimony vacillates to a stance that makes it difficult to demonstrate a reasonable expectation of success— i.e., the existence of "unlimited" permutations that were "impossible" to address. Ex. 2015, 81:21–83:24, 84:13–24, 143:20–144:3. We find this testimony contradictory. In summary, neither the Petition, Dr. Creusere's declaration, nor his deposition testimony provide any indication as to how a person having ordinary skill in the art would select among the countless permutations or further narrow the set of choices.

Petitioner's modeling, simulation, and testing theory fails to satisfy sufficiently its "reasonable expectation of success" theory evidentiary burden pursuant to the Federal Circuit's decision in *In re Kubin*, 561 F.3d 1351, 1359 (Fed. Cir. 2009) (it is "improper" to argue an obviousness theory on the basis that "it would have been 'obvious to try' . . . to vary all parameters or try each of numerous possible choices until one possibly arrived at a successful result."). *Leo Pharm. Prod., Ltd. v. Rea*, 726 F.3d 1346, 1357 (Fed. Cir. 2013) ("obviousness law in general recognizes an important distinction between combining known options into 'a finite

number of identified, predictable solutions,' and 'merely throwing metaphorical darts at a board' in hopes of arriving at a successful result."). Furthermore, the Federal Circuit explained in *Kubin*, the Board should not use hindsight based on allegations that require that the person having ordinary skill in the art to randomly pick from a board filled with combinational prior art possibilities. *Kubin*, 561 F.3d at 1359.

To paraphrase, Petitioner is attempting to bypass its evidentiary burden of having to proffer particular evidence of a specific combination, which would teach the "faster than" limitation recited in claims 1, 21, and 25 by instead repeating that "modeling, simulation, and testing" leads to a reasonable expectation of success (Pet. 28); whereas, in this proceeding, the number of permutations and variables are "unlimited" and "impossible" to address, as acknowledged by Dr. Creusere (Ex. 2015, 81:21–83:24, 84:13–24, 143:20–144:3). That is, Petitioner's attempt at crafting a theory of obviousness using non-specific teachings from Franaszek and Osterlund that allegedly demonstrate a reasonable expectation of success; this attempt, however, falls significantly short of the Federal Circuit's requirements.

Another obstacle to our reliance on Dr. Creusere's vacillating opinions is Patent Owner's declarant, Dr. Kenneth A. Zeger, Ph.D. Dr. Zeger opines in his declaration that Franaszek illustrates complex choices a person having ordinary skill in the art would face in considering whether and how to modify Franaszek in light of Osterlund on this record. Ex. 2017 ¶¶ 152–169. In particular, Dr. Zeger opines that Franaszek's approach requires numerous steps that each create delays before compression occurs, which are illustrated in Dr. Zeger's figure below. *Id.*

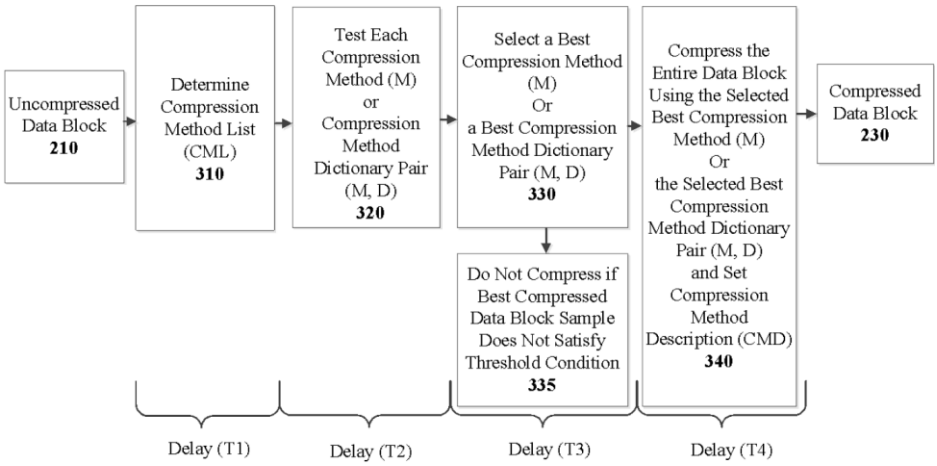

The figure above illustrates delays (T1), (T2), (T3), and (T4). Specifically, these delays include the time to: (1) expand an appropriate compression method list (CML) (Delay T2) (*id.*); (2) test multiple compression methods (or compression method dictionary pairs) on a data block sample (Delay T3; block 321) (*id.*); (3) determine the highest compression ratio compression method (*id.*); and (4) compress the entire data block with the highest compression ratio compression method (*id.*). These delays illustrate that combining Franaszek and Osterlund is complex and does not show necessarily a reasonable expectation of success when combining the teachings of Franaszek and Osterlund to achieve the "faster than" limitation as required by claims 1, 21, and 25.

When faced with Dr. Creusere's inconsistent testimony that a person having ordinary skill in the art would have a reasonable expectation of success when combining the teachings of Franaszek and Osterlund (Pet. 28) while, on the other hand, his testimony that the number of "unlimited" permutations were "impossible" to address (Ex. 2015, 81:21–83:24, 84:13–24, 143:20–144:3) and Dr. Zeger's testimony, we find Dr. Zeger's testimony on this point, on balance, to be more persuasive. We, therefore, agree with

Dr. Zeger that: (1) Franaszek illustrates complex choices a person having ordinary skill in the art would face in considering whether and how to modify Franaszek in light of Osterlund on this record (Ex. 2017 ¶¶ 152–169); and (2) Franaszek's approach requires numerous steps that each create delays before compression occurs (*id.*). We find that each of the Dr. Zeger's aforementioned points (*id.*) shows sufficiently that Petitioner has failed to demonstrate a "reasonable expectation of success" when attempting to combine the teachings of Franaszek and Osterlund.

Accordingly, we find that Petitioner failed to meet its burden of proof in showing: (1) how specific references could be combined, which combination(s) of elements in specific references would yield a predictable result, or how any specific combination would operate or read on the asserted claims; which is closely related to point number (2), namely, whether a person having ordinary skill in the art on this record could have had a reasonable expectation of success in attempting to combine the teachings of Franaszek with Osterlund.

4. Conclusion

In conclusion, for the reasons given above and based on our review of the parties' arguments and evidence, Petitioner has not shown by a preponderance of the evidence that Franaszek and Osterlund render obvious the subject matter of claims 1, 9, 11, 21, 22, 24, and 25 of the '908 patent.

III. CHALLENGE TO PETITIONER'S REPLY ARGUMENTS

On June 6, 2017, Patent Owner filed a list of Petitioner's allegedly improper reply arguments pursuant to *Silicon Laboratories., Inc. v. Cresta Technology Corp.*, Case IPR2015-00615. Paper 57 ("List"). On June 13,

2017, Petitioner submitted a list responding to Patent Owner's list. Paper 59 ("Reply List").

We find that Petitioner's Reply exceeds the proper scope of a reply. As provided in 37 C.F.R. § 42.23(b), a "reply may only respond to arguments raised in the corresponding opposition or patent owner response." Thus, "a reply that raises a new issue or belatedly presents evidence will not be considered and may be returned. The Board will not attempt to sort proper from improper portions of the reply." Office Patent Trial Practice Guide, 77 Fed. Reg. 48,756, 48,767 (Aug. 14, 2012). We provide each of the parties' listed arguments in turn in the following tables; we order the tables in the same chronological order as the parties' ordered their tables.

Table I

Patent Owner's List of Petitioner's Improper Reply Arguments	**Petitioner's Reply to Patent Owner's List**
The '908 patent itself thus concedes that a POSITA could make the relevant choice with ease[.] List 1 (citing Reply 11).	Arguing that Dr. Creusere "failed to specify whether and how a POSA would modify Franaszek's compression techniques" and whether a "POSA would modify Franaszek's set of existing compression techniques ***at all***, and if so, which techniques the POSA would even consider." Reply List 1–2 (citing PO Resp. 16–19).
Choosing the right techniques to achieve these goals was well within the skill of a POSITA. *Supra*, §§ IV.A.1-2 [citing Reply at 11-13]. List 1 (citing Reply 13)	*See* above.
As we have shown above, the '908 patent concedes that the selection	*See* above.

of compression techniques to accomplish this goal was routine and well-understood and the experts all agree. *Supra* §§IV.A [citing Reply at 11-13]. There are no "evidentiary gaps" to fill in Petitioner's obviousness analysis. List 1 (citing Reply 18).	

The table above illustrates Patent Owner's list of improper reply arguments in the left column and Petitioner's reply list in the right column. Notably, Petitioner proffers a new theory that was not relied upon previously. *Compare* Reply List 1–2 (citing PO Resp. 16–19) *with supra* § II.D.3., 11–13. That is, Petitioner is now arguing that "[t]he '908 patent itself thus concedes that a POSITA could make the relevant choice with ease." Reply 11; *Compare id.* at 11, 13, 18 *with supra* § II.D.3., 11–13. Moreover, Petitioner does not cite to a segment of the Petition or Dr. Creusere's declaration that articulates "'whether and how a POSA would modify Franaszek's compression techniques' and whether a 'POSA would modify Franaszek's set of existing compression techniques ***at all***, and if so, which techniques the POSA would even consider,'"

Moving on to the parties' next list point, we illustrate the table below.

Table II

Patent Owner's List of Petitioner's Improper Reply Arguments	**Petitioner's Reply to Patent Owner's List**
The '908 patent even suggests that a POSITA should choose from available algorithms to practice the invention. List 1 (citing Reply 18).	Arguing an absence of evidence of any reasonable expectation of success and the argument that the obviousness position was nothing more than "throwing metaphorical darts at a board." Reply List 2 (citing

	PO Resp. 36–41).

The table above illustrates Patent Owner's list of improper reply arguments in the left column and Petitioner's reply list in the right column. Here, we note that Petitioner advances a new theory that was not relied upon previously. *Compare* Reply 18 *with supra* § II.D.3., 11–13. In particular, Petitioner's new theory is that "[t]he '908 patent even suggests that a POSITA should choose from available algorithms to practice the invention." Reply 18; *Compare id. with supra* § II.D.3., 11–13. Further, Petitioner does not refer to a portion of the Petition or Dr. Creusere's declaration that supports any reasonable expectation of success.

The parties' next list point is illustrated in the chart below.

Table III

Patent Owner's List of Petitioner's Improper Reply Arguments	**Petitioner's Reply to Patent Owner's List**
A POSITA would have been aware of many different ways to achieve the result of the claims and that they would have readily been able to identify numerous workable solutions, as indicated by the '908 patent's discussion of using the alleged invention to compress current or future data types with known compression techniques. List 1–2 (citing Reply 19).	Arguing Petitioner's position is not an "obvious to try" theory and arguing that there is no "indication as to how a POSA would select among the innumerable permutations or further narrow the set of choices." Reply List 2–3 (citing PO Resp. 36–41).

The table above illustrates Patent Owner's list of improper reply arguments in the left column and Petitioner's reply list in the right column. Indeed, in its Reply, Petitioner states "Patent Owner mischaracterizes

Petitioner's position as one based on an 'obvious to try' theory." Reply 19. If Petitioner came to a full stop in its Reply after stating the preceding sentence, that would have been the proper course of action. Simply put, Petitioner's admission that its theory is not an "obvious to try" theory would have been sufficient rebuttal to Patent Owner. *Id.*; PO Resp. 36–41. Petitioner, however, advances a new theory under the guise of saying it was responding to Patent Owner's allegation that Petitioner's theory is an "obvious to try" theory. Reply 19; *Compare id.*; PO Resp. 36–41 *with supra* § II.D.3., 11–13. Namely, Petitioner's new theory states "a POSITA would have been aware of many different ways to achieve the result of the claims and that they would have readily been able to identify numerous workable solutions, as indicated by the '908 patent's discussion of using the alleged invention to compress current or future data types with known compression techniques." *Compare* Reply 19 *with supra* § II.D.3., 11–13.

The parties' next list point is illustrated below.

Table IV

Patent Owner's List of Petitioner's Improper Reply Arguments	**Petitioner's Reply to Patent Owner's List**
Patent Owner also overlooks Franaszek's embodiments that are not limited to placing a compressor between a host and remote storage. List 2 (citing Reply 15).	Arguing that Osterlund's interposing arrangement "would not modify Franaszek at all." Reply List 3 (citing PO Resp. 27–29).

The table above illustrates Patent Owner's list of improper reply arguments in the left column and Petitioner's reply list in the right column. Here, Petitioner improperly argues a new theory by stating "Franaszek's

embodiments that are not limited to placing a compressor between a host and remote storage." Reply 15; *Compare id. with supra* § II.D.3., 11–13. We also note that Petitioner does not point to an excerpt of the Petition or Dr. Creusere's declaration that demonstrates how Osterlund's interposing arrangement modifies Franaszek.

Another one of the parties' list point follows in the table below.

Table V

Patent Owner's List of Petitioner's Improper Reply Arguments	**Petitioner's Reply to Patent Owner's List**
When the compressor is "interposed" between a host and a slow remote memory device, Osterlund's techniques can be used to ensure that data is stored and retrieved faster than is otherwise possible. Because Franaszek's embodiments are not limited to this arrangement—and Franaszek is entirely silent on where the compressor is besides it being between two memories—placing the compressor between the host and remote storage is an obvious modification of Franaszek. List 2 (citing Reply 16).	Arguing that Osterlund's interposing arrangement "would not modify Franaszek at all." Reply List 3 (citing PO Resp. 16).

The table above illustrates Patent Owner's list of improper reply arguments in the left column and Petitioner's reply list in the right column. Petitioner contends a new theory that "[w]hen the compressor is 'interposed' between a host and a slow remote memory device, Osterlund's techniques can be used to ensure that data is stored and retrieved faster than is otherwise

possible." Reply 16; *Compare id. with supra* § II.D.3., 11–13. Petitioner's new theory continues by stating "[b]ecause Franaszek's embodiments are not limited to this arrangement—and Franaszek is entirely silent on where the compressor is besides it being between two memories—placing the compressor between the host and remote storage is an obvious modification of Franaszek." Reply 16; *Compare id. with supra* § II.D.3., 11–13. In addition, Petitioner does not cite the Petition or Dr. Creusere's declaration that demonstrates how Osterlund's interposing arrangement modifies Franaszek.

The parties' last list point is shown in the following table.

Table VI

Patent Owner's List of Petitioner's Improper Reply Arguments	**Petitioner's Reply to Patent Owner's List**
Patent Owner alleges that whatever the motivation to combine is, it "must be in reference to the specific combination of prior art elements the POSA would allegedly bring together, and the manner in which he or she would do so." Patent Owner is again mistaken, particularly as it applies to the claimed feature not expressly taught by Franaszek. That feature—that "said compression and storage occurs faster than said data stream is able to be stored on said memory device in said received form" —is not an "element" at all. Instead, it is a goal of the compression and	arguing that "the articulated reason to combine must be in reference to the specific combination of prior art elements the POSA would allegedly bring together" and citing KSR for the proposition that there must be an identified "reason that would have prompted a person of ordinary skill in the relevant field to combine the elements in the way the claimed new invention does"); (arguing that the Petition "fails to" articulate "a specific combination of prior art elements in a particular manner," and "how such a particular combination would teach the 'faster than' limitation" of the challenged claims). Reply List 3–4 (internal citations omitted) (citing PO Resp. 35, 37).

storage of the two claimed data blocks. List 2–3 (citing Reply 17–18).	

The table above illustrates Patent Owner's list of improper reply arguments in the left column and Petitioner's reply list in the right column. Like the previous 8 examples, Petitioner offers up a new theory that:

> Patent Owner alleges that whatever the motivation to combine is, it "must be in reference to the specific combination of prior art elements the POSA would allegedly bring together, and the manner in which he or she would do so." Patent Owner is again mistaken, particularly as it applies to the claimed feature not expressly taught by Franaszek. That feature—that "said compression and storage occurs faster than said data stream is able to be stored on said memory device in said received form" —is not an "element" at all. Instead, it is a goal of the compression and storage of the two claimed data blocks

Reply 17–18; *Compare id. with supra* § II.D.3., 11–13.

We also note Petitioner's lack of citation to the Petition or Dr. Creusere's declaration to support a theory that the "faster than" limitation is not a claim element, but rather a goal.

In summary, we conclude that Petitioner's Reply includes at least 9 significant portions exceeding the scope of the reply under § 42.23(b). As stated *supra*, "[t]he Board will not attempt to sort proper from improper portions of the reply." We, therefore, decline demarcating Petitioner's Reply into proper and improper portions because such a task would involve mining through Petitioner's Reply and deciphering whether improper segments spanning a significant amount of pages (e.g., Reply 11, 13, 15–19) bleed into other parts of the Reply. The abundance of "*supra*" indicators that reference entire sections of the Reply that Petitioner has scattered

throughout its Reply is one example that highlights our concern the improper segments may bleed into other parts of the Reply. Even if the arguments contained in Petitioner's Reply were proper, which they are not, the arguments contained in the reply brief are unpersuasive for at least the same reasons we find the arguments in the Petition unpersuasive. *See Intelligent Bio-Systems, Inc. v. Illumina Cambridge Ltd.*, 821 F.3d 1359, 1370 (Fed. Cir. 2016) (upholding the Board's Decision not to sort proper from improper portions of the reply).

IV. PATENT OWNER'S OBJECTIONS TO PETITIONER'S DEMONSTRATIVES

On July 21, 2017, Patent Owner filed objections (Paper 67, "PO Obj.") to slides 4–5 and 18–20 of Petitioner's demonstratives on the basis that they present the theory set forth for the first time in Petitioner's Reply, which Patent Owner previously identified in its List. PO Obj. 1 (citing List 1–3; Ex. 1015, 4–5, 18–20).

In response, Petitioner submitted objections (Paper 68, "Pet. Obj.") to slides 6–9, 27–50, and 44–45 of Patent Owner's Demonstratives because those slides present unsupported notational times or formulas for time to create examples not found anywhere in the record evidence. Pet. Obj. 1 (citing Ex. 2019, 6–9, 27–50, and 44–45).

Initially, we note that demonstratives are not evidence, but, instead are merely aids to the parties in presenting their cases to the Board. Regarding the Patent Owner's objections (PO Obj. 1), we decline to consider slides 4–5 and 18–20 of Petitioner's demonstratives (Ex. 1015, 4–5, 18–20) for at least the same reasons we articulated *supra* Section III. As for Petitioner's objections (Pet. Obj. 1), we dismiss them as moot because we did not rely on

slides 6–9, 27–50, and 44–45 of Patent Owner's demonstrative (Ex. 2019, 6–9, 27–50, and 44–45) in drafting our Final Written Decision.

V. CONCLUSION

In conclusion, Petitioner has not shown by a preponderance of the evidence that claims 1, 9, 11, 21, 22, 24, and 25 are unpatentable under 35 U.S.C. § 103(a) in view of Franaszek and Osterlund; accordingly, dependent claims 2 and 4–6, which depend from independent claim 1, are not unpatentable under 35 U.S.C. § 103(a) in view of Franaszek, Osterlund, and Fall for at least the same reasons explained *supra* § II–IV.

VI. ORDER

Accordingly, it is

ORDERED that Petitioner has not shown by a preponderance of the evidence that claims 1, 2, 4–6, 9, 11, 21, 22, 24, and 25 of the '908 patent are unpatentable;

FURTHER ORDERED that a copy of this Decision will be entered into the record of IPR2016-01002, IPR2016-01672, and IPR2017-00364; and

FURTHER ORDERED that, because this is a Final Written Decision, the parties to the proceeding seeking judicial review of the decision must comply with the notice and service requirements of 37 C.F.R. § 90.2.

PETITIONER:

Andrew Sommer
asommer@winston.com

Thomas Dunham
tdunham@winston.com

Jamie Lynn
Jamie.lynn@bakerbotts.com

Adam Shartzer
shartzer@fr.com

John Vandenberg
John.vandenberg@klarquist.com

Garth Winn
Garth.winn@klarquist.com

Kyle Howard
Kyle.howard.ipr@haynesboone.com

Greg Webb
Greg.webb.ipr@haynesboone.com

David O'Dell
David.odell.ipr@haynesboone.com

Jonathan Link
Jonathan.link@lw.com

Lisa Nguyen
Lisa.nguyen@lw.com

Bob Steinberg
Bob.steinberg@lw.com

PATENT OWNER:

William Rothwell
william@noroozipc.com

Kayvan Noroozi
kayvan@noroozipc.com