Trials@uspto.gov
Tel: 571-272-7822

Paper 85
Entered: November 19, 2018

UNITED STATES PATENT AND TRADEMARK OFFICE

BEFORE THE PATENT TRIAL AND APPEAL BOARD

COASTAL INDUSTRIES, INC.,
Petitioner,

v.

SHOWER ENCLOSURES AMERICA, INC.,
Patent Owner.

Case IPR2017-00573
Patent 7,174,944 B1

Before MICHAEL W. KIM, CARL M. DEFRANCO, and ALYSSA A. FINAMORE, *Administrative Patent Judges*.

Opinion for the Board filed by *Administrative Patent Judge* KIM.

Opinion Dissenting-in-Part filed by *Administrative Patent Judge* DEFRANCO.

FINAL WRITTEN DECISION
35 U.S.C. § 318(a) and 37 C.F.R. § 42.73

I. INTRODUCTION

A. Background

Coastal Industries, Inc. ("Petitioner") filed a Petition requesting *inter partes* review of claims 1–26 of U.S. Patent No. 7,174,944 (Ex. 1001, "the '944 patent"). Paper 1 ("Pet."). Shower Enclosures America, Inc. ("Patent Owner") filed a Patent Owner's Election to Waive Under 37 C.F.R. § 42.107(b). Paper 8.

On July 20, 2017, we instituted an *inter partes* review only on certain claims 1–3, 5, 7–9, 11–14, and 16–26, and only on certain grounds of unpatentability, set forth in the Petition. Paper 9 ("Dec."). After institution of trial, Patent Owner filed a Patent Owner Response (Paper 13, "PO Resp."), Petitioner filed a Reply (Paper 20, "Pet. Reply"), and, with Board authorization (Paper 21), Patent Owner filed a Sur-Reply (Paper 39, "PO Sur-Reply") "to respond to new evidence and corresponding arguments set forth in Petitioner's Reply." Paper 21, 2. An oral hearing was held on March 28, 2018. Paper 43 ("Tr.").

On April 24, 2018, the Supreme Court held that a decision to institute under 35 U.S.C. § 314 may not institute on fewer than all claims challenged in a petition. *SAS Inst., Inc. v. Iancu*, 138 S. Ct. 1348, 1355 (2018). Consistent with *SAS*, we modified the trial to institute on all claims and grounds set forth in the Petition. Paper 44, 2 ("*SAS* Order"). We also authorized additional briefing and evidence, but noted that "the additional briefing and evidence is restricted to that which the parties did not have an opportunity to respond." Paper 49, 3 ("Briefing Order").

Subsequent to that authorization, Patent Owner filed a Further Response Under 37 C.F.R § 42.120(a), Redacted as Per Paper #54

(Paper 55; "Further Response"; "PO Supp. Resp."), to which Petitioner filed a Supplemental Reply to Patent Owner's Further Response (Paper 60; "Supplemental Reply"; "Pet. Supp. Reply").

Patent Owner additionally filed a Motion to Amend Claims (Paper 52; "PO Amend."), to which Petitioner filed an Opposition to Patent Owner's Motion to Amend Claims (Paper 59; "Pet. Amend.")[1], and Patent Owner filed a Reply to Petitioner's Opposition to Patent Owner's Motion to Amend Claims (Paper 69; "PO Reply").

Patent Owner also filed a Motion to Exclude Exhibits 1003, 1009, 1034 (Paper 80; "PO Mot.") to which Petitioner filed an Opposition to Patent Owner's Motion to Exclude Exhibits 1003, 1009, 1034 (Paper 83; "Pet. Opp."). A supplemental oral hearing was held on October 3, 2018. Paper 84 ("Supp. Tr.").

The Board has jurisdiction under 35 U.S.C. § 6. In this Final Written Decision, after reviewing all relevant evidence and assertions, we determine that Petitioner has met its burden of showing, by a preponderance of the evidence, that claims 1–3, 5, 7–9, 11–14, and 16–26 of the '944 patent are unpatentable. We determine further that Petitioner has not met its burden of showing, by a preponderance of the evidence, that claims 4, 6, 10, and 15 of the '944 patent are unpatentable. We additionally grant Patent Owner's Motion to Amend for substitute claims 33 and 34. We further deny Patent Owner's Motion to Exclude.

[1] Paper 59 has the same title and was filed at the same time as Paper 58. In a communication to the Board, Petitioner requested that the Board refer to Paper 59 only.

B. Related Proceedings

Petitioner and Patent Owner identify the following action as related to the ’944 patent: *Shower Enclosures America, Inc. v. BBC Distribution Corp.*, Case No. 3:15-cv-627 (N.D. Ind.). Pet. 6; Paper 7, 1.

C. The ’944 Patent

The ’944 patent relates generally to “a track mechanism for a tri-panel door assembly that uses a header with two tracks and has an interlocking function that allows the movement of an outer door to guide the middle door with a smooth sliding operation.” Ex. 1001, 1:40–45. Figure 2 of the ’944 patent is a partially exploded perspective view of triple slide assembly 10, and is set forth below.

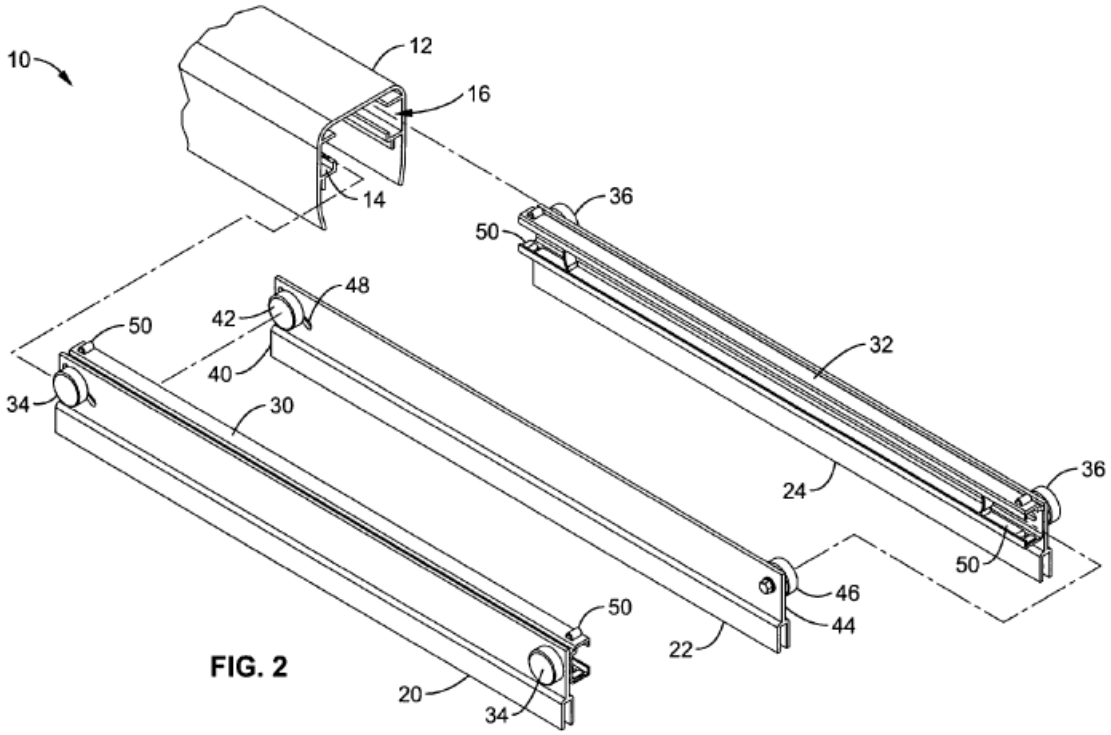

FIG. 2

Ex. 1001, Fig. 2.

As shown above in Figure 2, triple slide assembly 10 includes two track header 12, with front header track 14 and rear header track 16 in the

walls of two track header 12. Ex. 1001, 6:27–30. Triple slide assembly 10 further includes three interlocking slider rails, front rail 20, middle rail 22, and rear rail 24. Ex. 1001, 6:31–32.

> Front rail 20 has front track 30 facing middle rail 22 and rear rail 24 has rear track 32 facing middle rail 22. Middle rail 22 is interconnected with rails 20, 24 through front track 30 and rear track 32. Front rollers 34 support front rail 20 in header track 14 and rear rollers 36 support rear rail 24 in header track 16.

Ex. 1001, 6:32–37.

> Referring to FIG. 2, middle rail 22 has left end 40 with a middle front roller 42 aligned with front track 30 and a right end 44 with a middle rear roller 46 aligned with rear track 34. Middle front roller 42 rides in front track 30 attached to front rail 20. Middle rear roller 46 rides in rear track 32 attached to rear rail 24. In this configuration, middle rail 22 is supported on left end 40 by front rail 20 through track 30 and roller 42 and on the right end 44 by rear rail 24 through track 32 and roller 46. This configuration of alternating rollers on front and rear tracks provides two direction movement of the middle rail 22 and couples front, rear tracks 30, 32 to middle rail 22 to allow simultaneous gliding, interlocking and adjustability. Angled slot 48 is provided for adjustment of middle rail 22 in relation to header 12.

Ex. 1001, 6:40–55.

D. Claims

Claims 1–26 are challenged, which are all of the current claims in the ’944 patent. Claims 1, 12, 19, and 22 are independent. Independent claim 1 is illustrative, and is reproduced below:

> 1. A slide assembly for three sliding panels adapted to couple to a header having first and second header tracks comprising:
>
> first and second rail members adapted to slidingly couple to the first and second header tracks respectively;

first and second track members adapted to couple to said first and second rail members respectively; and

a third rail member adapted to slidingly couple to said first and second track members;

wherein said third rail member is supported by said first and second track members; and

wherein said first and second track members remain aligned with the header when the alignment of said first or said second rail members is adjusted.

E. Asserted Grounds of Unpatentability

Petitioner challenges claims 1–26 on the following grounds.

References	Basis	Challenged Claim
Comeau[2] and Sterling[3]	§ 103(a)	1–11 and 19–21
Van Weelden[4]	§ 102(b)	1–3, 5, 7–9, 11–13, 17–22, 25, and 26
Van Weelden and Sterling	§ 103(a)	1–26
Comeau and Jang[5]	§ 103(a)	12–16 and 22–24
Van Weelden, Jang, and Sterling	§ 103(a)	12–18 and 22–26

Petitioner also relies on the Declarations of Florin Poenariu (Ex. 1003), Trace Jackson (Ex. 1023), Christopher Butler (Ex. 1029), and Jeffrey Dowd (Ex. 1034). Of those individuals, Patent Owner cross-examined Mr. Poenariu (Ex. 2001), Mr. Butler (Ex. 2003), and Mr. Dowd (Exs. 2006, 2007). For Mr. Dowd, Patent Owner filed a Motion for

[2] U.S. Patent No. 6,892,783 B1, issued May 17, 2005 (Ex. 1010; "Comeau").
[3] "Installation Guide: 5700 Series Finesse™ Tri-Panel Bath and Shower Doors," by Sterling, A Kohler Company, published 2002 (Ex. 1009; "Sterling").
[4] U.S. Patent No. 4,633,614, issued Jan. 6, 1987 (Ex. 1011; "Van Weelden").
[5] EP 0 985 793 A2, published Mar. 15, 2000 (Ex. 1012; "Jang").

Observations on Cross Examination (Paper 78; "PO Obs."), to which Petitioner filed a Response to Patent Owner's Motion for Observations on Cross Examination of Reply Witness Mr. Dowd (Paper 81; "Pet. Obs.").

II. ANALYSIS

A. Level of Ordinary Skill in the Art

Petitioner proposes a level of ordinary skill in the art at the time of the invention. Pet. 26. Patent Owner sets forth many assertions related to the level of ordinary skill in the art at the time of the invention. PO Resp. 3–14, 20–30; PO Supp. Resp. 15–20. Petitioner responds to those assertions. Pet. Reply 2–4, 9–18; Pet. Supp. Reply 15–16. While we will address each of those assertions, as a substantive matter, Petitioner asserts that "PO does not dispute the definition of a PHOSITA, offer a contrary definition, explain how a different definition might affect the Board's analysis, nor contest the Board's specific interpretation of the prior art references to put the PHOSITA determination at issue." Pet. Reply 16–18; Pet. Supp. Reply 15–16. We agree with that assessment. Moreover, we note that the level of ordinary skill in the art is often reflected by the prior art of record. *See Okajima v. Bourdeau*, 261 F.3d 1350, 1355 (Fed. Cir. 2001); *In re GPAC Inc.*, 57 F.3d 1573, 1579 (Fed. Cir. 1995); *In re Oelrich*, 579 F.2d 86, 91 (CCPA 1978). Accordingly, as an initial matter, we address Petitioner's unopposed substantive assertion with respect to the level of ordinary skill in the art at the time of the invention.

1. Substantive Analysis

The Petition asserts the following concerning the level of ordinary skill in the art:

> Based on the disclosure of the [']944 Patent, a person having ordinary skill in the art ("POSITA") at the relevant time, would have had at least a bachelor's degree in mechanical engineering, industrial engineering or related field, or equivalent experience of at least two years working in the field of the design and/or installation of sliding door or cabinet systems or enclosures.

Pet. 26. In support, Petitioner provides the Declaration of Mr. Poenariu, who asserts the following

> a POSITA at the time of the [']944 Patent filing would have been an engineer with at least a bachelor's degree in mechanical engineering, or a related field, or equivalent experience of at least two years of working in the field of design and/or installation of sliding door or cabinet systems or enclosures.

Ex. 1003 ¶ 15; *see also* Ex. 1003 ¶¶ 13, 14, 16–20 (other paragraphs set forth under section heading entitled "Person Having Ordinary Skill in the Art ('PHOSITA')"). Mr. Poenariu sets forth his qualifications, as follows:

> My educational background includes a Bachelor of Science in Mechanical Engineering (1995), and a Master's Degree in Mechanical Engineering (1997) from Politehnica' University of Timisoara, Timisoara, Romania, both which were credited in 2007 by the University of Toronto, Canada. During the latter educational period, I was employed by UMT Timisoara, Romania, designing, prototyping and documenting mechanical parts and assemblies. My career has been focused on the design and development of mechanical parts, and in particular, mechanical rail systems for doors, cabinets, partitions and such, at several companies in Europe, Canada and in the United States.
>
> I am knowledgeable and familiar with mechanical aspects of panel doors and in particular with rails, tracks and their operational mechanical design components. Additional details of my education and employment history are set forth in my current curriculum vitae, provided attached to this Declaration as Ex. 1004.

Ex. 1003 ¶¶ 8–9. Concerning his substantive analysis, which includes his assessment of the level of ordinary skill in the art at the time of the invention, Mr. Poenariu testifies, as follows:

> My analysis is based on my education and experience as set out above and in my CV, including the documents I have read and mechanical systems I have developed.
>
> I reviewed the various relevant publications from the art at the time of the alleged invention and the claim analysis that is included in the Petition for IPR of the '944 Patent, to which this declaration relates. I have also reviewed the Petition in its entirety. Based on my experience as a person having ordinary skill in the art ("POSITA") at the time of the alleged invention, the references accurately characterize the state of the art at the relevant time.

Ex. 1003 ¶¶ 10–11. Mr. Poenariu further states "[m]ore specifically, I have reviewed at least the following references for the preparation of this Declaration," and then lists Exhibits 1001, 1002, 1005–1022. Ex. 1003 ¶ 11. Among those references are the '944 patent, Van Weelden, Sterling, Jang, and Comeau. Ex. 1003 ¶ 11. The '944 patent "pertains generally to track mechanisms for sliding doors," with schematic views of the relationship between various parts of those slidable doors. Ex. 1001, 1:40–41; Figs. 1–7. Van Weelden "relates to structures for mounting a slidable door on rails for movement thereon." Ex. 1011, 1:7–8. Sterling is entitled "5700 Series Finesse™ Tri-Panel Bath and Shower Doors," and reads "[p]lease take a few minutes to study these Installation Instructions." Ex. 1009, 1–2. Jang "relates, in general, to sliding doors," with schematic views of the relationship between various parts of those slidable doors. Ex. 1012 ¶ 1, Figs. 1–8. Comeau relates to "a multiple panel track system for a window covering assembly," with schematic views of the relationship between

various parts of such a system. Ex. 1010, 1:4–7; Figs. 1–28; *see also* Pet. 3 (citing Ex. 1005, 342–347 (book entitled "Building Construction and Superintendence" with a section on "Sliding Door Hangers")).

Furthermore, Petitioner additionally asserts the following:

> PO admitted that Mr. Poenariu is a technical expert in the art. Paper 43, 26:20–27:3. PO contends that Mr. Poenariu cannot opine about the level of ordinary skill in the art, alleging that Mr. Poenariu's analysis was deficient. Paper 43, 4:4–6. However, PO has still not provided an alternative level of skill in the art, or shown how such a skill would affect Mr. Poenariu's opinions or the Board's decisions. ***Further, Mr. Dowd's declaration, Ex. 1034, confirms Mr. Poenariu's conclusions.*** Accordingly, the Board should ignore PO's renewed arguments, *e.g.*, FR, pp. 11, 14, 16, regarding the level of ordinary skill in the art.

Pet. Supp. Reply 15–16 (emphasis added); Ex. 1034 ¶ 13 ("After reviewing the [']944 specification and claims, I agree with Mr. Poenariu's POSITA definition and provide my opinions from the perspective of a POSITA in the early 2000s.").

Mr. Dowd sets forth his qualifications, as follows:

> I have been working in the shower door industry since 1985, when I began working for Southeastern Aluminum Products ("Southeastern") in Jacksonville, Florida. Southeastern is a leading bath enclosure company that has been in business since 1952 and serves the United States, Canada, and the Caribbean.
>
> I worked for Southeastern from 1985 until 2016. During my 30+-year tenure at Southeastern, I received various promotions and worked throughout the United States, particularly out of Jacksonville, Florida; Raleigh, North Carolina; Indianapolis, Indiana; and Dallas, Texas.
>
> At Southeastern, I began providing shower enclosure technical assistance to customers in 1985 as a customer

representative. In or about 1988, I was promoted to serve as Southeastern's customer service manager. My duties as customer service manager at Southeastern included general customer service department duties and helping other departments, including in the product improvement and development areas. For example, I routinely provided insight and assisted in developing profiles and parts to accommodate custom door applications. I also performed local SD installation for customers.

In or about 1990, I joined Southeastern's sales team as their Mid-Atlantic Sales Representative. This new title did not limit the scope of my work; I continued to help develop and test new product lines, wrote product installation instructions and specifications, and provided installation training, as well maintained sales accounts.

In or about 1996, I became Southeastern's Mid-Western sales representative until I was promoted to serve as the Western Regional Sales Manager from 1999 to 2005. Aside from the areas serviced and additional sales managerial responsibilities, my product development functions in the company did not substantially differ from those in my previous position. During this time period, I helped develop and improve Southeastern products, including, for example, by becoming a member of Southeastern's product advisory council and participating in the development of a pivot door hinge system which Southeastern implemented in some of their bathroom enclosure products. This pivot door hinge system was awarded U.S. Pat. No. 6,643,898 B1 of which I am a listed inventor.

In or about 2005, I was promoted to Southeastern's Vice-President of Sales. I served in that capacity until I was again promoted by Southeastern in 2014 to serve as Vice-President of Sales & Marketing. I left my position at Southeastern in 2016 and have been serving as Coastal Industries, Inc.'s Western Regional Manager, International Accounts West / Midwest / Caribbean / Canada, for just over two years.

Ex. 1034 ¶¶ 1–6. Concerning his substantive analysis, which includes his assessment of the level of ordinary skill in the art at the time of the invention, Mr. Dowd testifies, as follows:

> As part of my analysis set forth in this declaration, I have reviewed the disclosure and claims of U.S. Pat. No. 7,174,944 ("the '944 Patent") from the viewpoint of a person of ordinary skill in the art at the time of the earliest possible priority of the '944 Patent (Jun. 11, 2003) based on my experience in the shower enclosures field. I have reviewed the following patents, publications, and other materials.

Ex. 1034 ¶ 8. Listed as having been reviewed are Exhibits 1001–1003, 1008–1022, 1035–1038, and among them are the '944 patent, Comeau, Van Weelden, Sterling, and Jang. Ex. 1034 ¶ 8.

Given the above, and the other assertions set forth by Petitioner in the relevant portions of the Petition, Mr. Poenariu's Declaration, and Mr. Dowd's Declaration, we find that Petitioner's proffered level of ordinary skill at the time of the invention is adequately supported and correct. There is no doubt that the relevant field of technology is installation of slidable doors, and Mr. Poenariu and Mr. Dowd each testify, essentially, that one of ordinary skill at the time of invention would have been an engineer with some experience in that field. As a practical matter, that is the level of ordinary skill proffered by Petitioner, and we need not come to a more exact articulation.

Accordingly, we find, as stated by Petitioer, that "a person having ordinary skill in the art ("POSITA") at the relevant time, would have had at least a bachelor's degree in mechanical engineering, industrial engineering or related field, or equivalent experience of at least two years working in the

field of the design and/or installation of sliding door or cabinet systems or enclosures." Pet. 26.

2. Procedural Analysis

Patent Owner sets forth many alleged procedural defects, promulgated by both Petitioner and the Board, related to the level of ordinary skill in the art. PO Resp. 3–14, 20–30; PO Supp. Resp. 15–20. Petitioner responds to those alleged procedural defects. Pet. Reply 2–4, 9–18; Pet. Supp. Reply 15–16. We address each in turn.

a. Analysis of Patent Owner's Procedural Assertions Generally Applicable to Decision

At the outset, under the heading of "Applicable Rules of Patent Law," Patent Owner makes several citations to the Manual of Patent Examining Procedure ("MPEP"), as well as 35 U.S.C. § 132 and *In re Piasecki*, 745 F.2d 1468 (Fed. Cir. 1984). PO Resp. 3–6 (citing MPEP §§ 2103, 2111, 2141); *see also* Pet. 20–21, 26–27 (citing MPEP § 2141); Pet. Reply 14 (citing MPEP § 2141). The MPEP is based on case law. Insofar as such case law concerns patent law principles generally applicable to both patent applications and issued patents, it is relevant and must be considered.

With respect to claim construction, Patent Owner first cites to *Phillips v. AWH Corp.*, 415 F.3d 1303, 1316 (Fed. Cir. 2005) (en banc), but then later cites to *In re Cortright*, 165 F.3d 1353, 1359 (Fed. Cir. 1999). Petitioner asserts that the Board does not apply *Phillips*, which is the claim construction standard used in district court, and instead applies the "broadest reasonable construction in light of the specification of the patent in which it

appears." Pet. Reply 10–11 (citing 37 C.F.R. § 42.100(b)).[6] For unexpired patents, Petitioner is, of course, correct, however, we note that *In re Cortright* is a case that utilizes the standard applicable to this proceeding.

In the next section of Patent Owner's Response, under the heading "Applicable Rules of Evidence," Patent Owner cites to *Aqua Products, Inc. v. Matal*, 872 F.3d 1290 (Fed. Cir. 2017). PO Resp. 7. The portion of *Aqua Products* quoted, however, only relates to amended claims, and has been applied below to those claims.

In that same section, Patent Owner also refers to Federal Rule of Evidence 702. PO Resp. 7; *see also* PO Resp. 14 ("The Board, as the gatekeeper, must ignore that testimony completely."), 30 ("[T]he events in this case, as shown by Mr. Poenariu's responses in his deposition (some of which are described above in detail), demonstrate that his Declaration was a complete sham. Mr. Poenariu simply signed what was written and put in front of him by his employer's attorney. The transcript demonstrates Mr. Poenariu's complete lack of fundamental understanding of the legal issues, rampant evasion, and a total irresponsibility for the truth of the statements of fact and opinions he proffered."). Petitioner asserts that this is essentially a "quasi-motion to exclude," and should not be considered. Pet. Reply 2–3; *see also* Pet. Reply 9–10 ("The Board is Capable of Evaluating the Declaration and Should Not Exclude It."). Insofar as Patent Owner is asserting that any expert testimony should be excluded, and not considered

[6] We acknowledge that for petitions filed on or after November 13, 2018, the *Phillips* standard will be applied. *Changes to the Claim Construction Standard for Interpreting Claims in Trial Proceedings Before the Patent Trial and Appeal Board*, 83 Fed. Reg. 51,340 (Oct. 11, 2018).

at all, because it does not meet the indicia of reliability under F.R.E. 702, we agree with Petitioner that the proper vehicle for such an assertion is a motion to exclude, and those arguments are addressed below in our consideration of Patent Owner's Motion to Exclude.[7]

Having said that, insofar as Patent Owner is asserting that any weight accorded any expert testimony should be discounted because it does not meet the indicia of reliability under F.R.E. 702, those arguments are proper, and should be considered.

Patent Owner further asserts the following:

> 37 CFR §42.22(c) permitted Coast to submit a "Statement of Material Facts" with its Petition. Coastal did not do so. Thus, it is not reasonable or feasible for the Patent Owner to attempt to decipher with specificity what those material facts may be from the Petition, and then specifically deny any such material fact as it would need to under 37 CFR §42.23(a). In general, however, and as explained in more detail above, the Patent Owner denies each and every allegation made by Coastal about what a POSITA would or would not think, know, or do. In addition, since there is no evidence of record as to what the relevant level of skill in the pertinent art is, the Patent Owner denies each and every allegation made by Coastal about how a reference would or could be combined with another reference, as well as every allegation of fact dependent upon what a claim element would mean to a person of ordinary skill in the art. Further, to the extent that any allegation of material fact made by Coastal was not expressly relied upon by the Board in its Decision, objection to that material fact is expressly reserved

[7] "The policy considerations for excluding expert testimony, such as those implemented by the gatekeeping framework established by the Supreme Court in *Daubert v. Merrell Dow Pharm., Inc.*, 509 U.S. 579 (1993), are less compelling in bench proceedings such as *inter partes* reviews than in jury trials." *Nestle Healthcare Nutrition, Inc. v. Steuben Foods, Inc.*, Case IPR2015-00249, slip op. at 23 (PTAB June 2, 2016) (Paper 76).

PO Resp. 29. As noted by Patent Owner, Petitioner did not submit such a "Statement of Material Facts," and so there is no "Statement of Material Facts" to object to or deny, expressly reserved or otherwise. With respect to other things objected to or denied, as a practical matter, the Board can only consider objections or denials to specific, discrete facts or arguments identified by Patent Owner. Accordingly, if Petitioner advances a fact or argument supported by evidence, and Patent Owner does not challenge that fact or argument, or underlying evidence, with specificity, while Patent Owner's blanket objections and denials are noted, as a practical matter, the Board can do no more than weigh the fact or argument, as well as the underlying evidence, in determining whether Petitioner has met its burden with respect to that specific fact or argument.

b. Analysis of Patent Owner's Procedural Assertions Specific to Level of Ordinary Skill

Patent Owner asserts that the Decision on Institution is procedurally deficient, because it does not affirmatively set forth a level of ordinary skill in the art. PO Resp. 8–9, 14. According to Patent Owner, "[w]ithout determining what the 'level of ordinary skill in the pertinent art' actually is, the entire obviousness analysis must STOP. It is procedurally (and logically) dead in the water." PO Resp. 9. Petitioner responds that the Board is not required to set forth an express finding as to the level of ordinary skill in the art in a decision on institution, and, indeed, that in many instances "[s]pecifying a particular level of skill is not necessary where the prior art itself reflects an appropriate level." Pet. Reply 14–16 (citing MPEP § 2141.03(II) (citing *Chore-Time Equipment, Inc. v. Cumberland Corp.*, 713 F.2d 774, 778–79 (Fed. Cir. 1983); *Okajima v. Bourdeau*, 261 F.3d at 1355)). Petitioner asserts further that the Federal Circuit rejected an

argument similar to Patent Owner's assertions in *VirnetX Inc. v. Apple Inc.*, 665 F. App'x 880, 884–85 (Fed. Cir. 2016) (unpublished). We agree with Petitioner's overall assertion, generally, but also on additional bases.

Specifically, Patent Owner's assertions appear to stem from a fundamental misunderstanding of *inter partes* review proceedings. *Inter partes* reviews are adversarial proceedings, where the Board, as decision maker, makes findings and renders judgment. Ultimate judgment is not rendered, however, until the final written decision. 35 U.S.C. § 318(a). Until that point in time, the papers that are the focus of the proceeding are those rendered by the parties, which, for a petitioner, is primarily the petition. Accordingly, during an *inter partes* review, a patent owner's focus should first and foremost be on the petition, in that any relevant assertions should be directed to purported deficiencies set forth in the petition.

Of course, the Board does render a decision on institution. 35 U.S.C. § 314(a). The decision on institution, however, is no more than a notice document as to whether a trial has been instituted on the claims and grounds set forth in the petition. *SAS*, 138 S. Ct. at 1355–56 ("[T]he statute says the Director must decide 'whether to institute an inter partes review . . . pursuant to a petition.' § 314(b). The Director, we see, is given only the choice 'whether' to institute an inter partes review. That language indicates a binary choice—either institute review or don't."). There is no statutory requirement that the decision on institution contain anything more than providing such notice to the parties, as the substantive requirements for instituting trial focus solely on the content of the petition. 35 U.S.C. § 314(a) ("The Director may not authorize an inter partes review to be instituted unless the Director determines that the information presented in

the *petition* . . . shows that there is a reasonable likelihood that the petitioner would prevail with respect to at least 1 of the claims challenged in the *petition*.") (emphases added); *see also* 37 C.F.R. § 42.108(c) ("*Inter partes* review shall not be instituted for a ground of unpatentability unless the Board decides that the petition supporting the ground would demonstrate that there is a reasonable likelihood that at least one of the claims challenged in the *petition* is unpatentable.") (emphases added). Patent Owner indicates that it is fully aware of the claims and grounds on which trial was instituted. PO Resp. 2; PO Supp. Resp. 2. Accordingly, any assertions concerning other "defects" in the Decision on Institution are misplaced.[8] To that end, we note that all of the MPEP sections and case law cited above by Patent Owner, regarding the alleged necessity of affirmatively setting forth a level of ordinary skill in the art, concern final decisions rendered by the Board, both from appeals from examiner rejections and trial proceedings, and not decisions on institution.

Indeed, we note further that, although not required to, Patent Owner did not file a preliminary response. Had Patent Owner challenged the level of ordinary skill in the art in the preliminary response, the Decision on Institution most likely would have addressed it. And if Patent Owner truly

---

[8] Although this determination would be legally sufficient under *SAS Inst. v. Iancu*, 138 S. Ct. 1348 (2018), for purposes of deciding whether to institute trial on a petition, the Office's current policy is to provide details to the parties to the extent practicable, including responding to a Patent Owner's arguments. *See SAS* Q&As, E1 (June 5, 2018) (available at https://www.uspto.gov/sites/default/files/documents/sas_qas_20180605.pdf). Here, although Patent Owner did not file a preliminary response, the Board did provide details in the Decision on Institution, including denying trial on certain claims and grounds. *See* generally Dec.

believed the Decision on Institution was fundamentally deficient in some way, the proper vehicle was a request for rehearing, of which none was filed. 37 C.F.R. § 42.71(c)–(d).

In view of the above, Patent Owner's assertions are misplaced, in that there was no requirement for the Board to affirmatively set forth a level of ordinary skill in the art in a decision on institution. The proper focus of such an inquiry is the petition. To that end, Patent Owner's assertions concerning other alleged omissions in the Decision on Institution concerning this issue, such as the lack of referral to the testimony of Mr. Poenariu (Ex. 1003), are similarly misplaced.

Patent Owner next asserts the following

> However, even assuming that Exhibit 1003 was implicitly and silently relied upon by the Board as providing some evidence of what the level of ordinary skill in the pertinent art was, that Exhibit must now be considered inadmissible as evidence in that regard, as shown by Mr. Poenariu's subsequent deposition testimony, a transcript of which is attached hereto as Exhibit 2001.

PO Resp. 9–10; *see also* PO Supp. Resp. 16 (asserting the same).[9] Patent Owner then goes into great detail as to the deficiencies with Mr. Poenariu's

---

[9] In our Briefing Order subsequent to *SAS*, we stated that "the parties have extensively addressed already the level of ordinary skill in the art . . . . Accordingly, further briefing on these issues is also not proper." Briefing Order 3–4. In response, Patent Owner, in addition to further addressing the level of ordinary skill in the art directly (PO Supp. Resp. 16), makes various assertions as to why, despite the above statement in our Briefing Order, it should be permitted to further address this issue at this point in the proceeding. PO Supp. Resp. 16–19. Petitioner responded to those further assertions, including submitting additional testimonial evidence from Mr. Dowd in support of its position (Pet. Supp. Reply 15–16 (citing Ex. 1034)),

testimony, and concludes by stating that "under F.R.E. 702, his opinion in that regard must not be admitted into evidence." PO Resp. 10–14; *see also* PO Supp. Resp. 16 (asserting the same). Petitioner asserts that this is essentially a "quasi-motion to exclude," and should not be considered. Pet. Reply 2–3. To the extent that Patent Owner is asking the Board to exclude Mr. Poenariu's testimony based on the assertions made in its Patent Owner Response and Further Response, we agree with Petitioner. The proper vehicle for such an assertion is a motion to exclude, which Patent Owner filed, and is addressed later in the Decision.

With respect to those same deficiencies, however, Patent Owner further asserts the following:

> Mr. Poenariu is being proffered as an expert witness by Coastal, whose testimony is to support its Petition. Exhibit 1003, at §§3 and 4. Therefore, with respect to 37 CFR §42.65(a), not only are the underlying facts or data which formed the bases for Mr. Poenariu's opinion, as to what the level of ordinary skill in the pertinent art was, not disclosed and are not discoverable, there simply were no such facts or data. Therefore, his opinion in that regard is entitled to zero weight.

PO Resp. 12; *see also* PO Resp. 7 (citing 37 C.F.R. § 42.65(a)); PO Supp. Resp. 16 (asserting the same). Petitioner responds, among other assertions, as follows:

---

and Patent Owner filed a Motion for Observations on Cross Examination which addresses Mr. Dowd's testimony on this issue (PO Obs. 7), to which Petitioner responded (Pet. Obs. 9–10). Accordingly, despite the statement made in our Briefing Order, because each party subsequently addressed this issue, in the interests of completeness and judicial efficiency, the panel exercises its discretion, and addresses the additional arguments raised by both parties concerning the level of ordinary skill in the art.

> PO selectively picks lines of Mr. Poenariu['s] deposition to argue that his testimony should be given no weight due to the PHOSITA analysis. However, in interpreting the prior art, Mr. Poenariu considered at least:
>
> (1) the educational level of the inventor (e.g., Paper 2, ¶¶ 15, 90; Ex. 2001, 90:18–91:15, [91]:20–92:7, 95:10–19);
>
> (2) the type of problems encountered in the art (Paper 2, ¶¶ 17, 19, Section III; Ex. 2001, 91:20–93:5, 111:16–112:24, 113:5–17);
>
> (3) prior art solutions to those problems (Paper 2, Section III; Ex. 2001, 80:18–81:23, 127:2–128:1, 129:4–131:2);
>
> (4) the rapidity with which innovations are made (Paper 2, Section III; Ex. 2001, 59:1–60:13, 62:8–18);
>
> and (5) the sophistication of the technology (*e.g.*, Paper 2, ¶¶ 32, 34; Ex. 2001, 85:7–87:5, 23:18–24:16, 54:2–54:18, 94:7–11, 118:13–25).

Pet. Reply 12–13. While we address each of Patent Owner's assertions below, in the aggregate, we agree with Petitioner.

Patent Owner first asserts that Mr. Poenariu's testimony that he considered several factors (Ex. 1003 ¶ 14) is not credible, given his testimony on cross-examination that he did not rely on any facts or data in coming to his conclusion concerning the level of ordinary skill in the art. PO Resp. 11–13 (Ex. 2001, 55, 83–85, 91–94, 115, 117–120). Petitioner counters that Mr. Poenariu did rely on facts, as set forth above, and that Patent Owner's identification of testimony where Mr. Poenariu admitted not conducting an "investigation" is misleading, as, according to Mr. Poenariu, "investigation" is a term with a very specific meaning, and not the same as "consider," "analyze," or "review," which are actions Mr. Poenariu does testify he performed in arriving at his conclusion concerning the level of ordinary skill in the art. Pet. Reply 11–14; Tr. 49:24–50:2. Petitioner

responds further that the purportedly undermining testimony was actually in response to a line of questioning concerning "mechanics of the preparation of the declaration and legal standards" which "[t]he PTAB has expressly held that this line of questioning by PO to Petitioner's technical expert concerning the mechanics of declaration preparation and legal standards is a **waste of time**, both for the witness and the Board." Pet. Reply 11–14. We agree with Petitioner.

As best as we are able to understand, Patent Owner appears to be asserting that in the absence of underlying facts or data, with such facts or data having been obtained by an express formal investigation, study, or survey, Mr. Poenariu's testimony concerning the level of ordinary skill in the art cannot be considered credible. *See e.g.*, Ex. 2001, 55:5–10, 83:5–13, 85:1–6, 91:5–10, 115:6–17. We disagree. Primarily, we disagree that facts or data that form the underlying basis of expert opinion must be the result of an express formal investigation, study, or survey. There is no such requirement in either 37 C.F.R. § 42.65(a) or in case law.

Moreover, while we agree generally with Patent Owner that Mr. Poenariu's performance during cross-examination was underwhelming, Petitioner asserts that (1) not all factors are present in every case, (2) the factors are not exhaustive, (3) Mr. Poenariu is a fact witness, and not a legal one, and (4) that "Mr. Poenariu's Declaration and deposition testimony provide sufficient support as to how Mr. Poenariu arrived at his PHOSITA determination. Hence, Mr. Poenariu's PHOSITA determination is legally sufficient." Pet. Reply 14. We agree with Petitioner. In particular, in agreeing with Petitioner's proffered level of ordinary skill in the art, we credit, among other non-exclusive factors, the following: (a) Mr. Poenariu's

education and work history (Ex. 1003 ¶¶ 8–9; Ex. 1004), and knowledge as an engineer (Ex. 2001, 54:15–25); (b) Mr. Poenariu's consideration of Exhibits 1001, 1002, 1005–1022 (Ex. 1003 ¶¶ 10–11; Ex. 2001, 59:11–15, 62:15–16, 81:4–10); (c) Mr. Poenariu's testimony that "'[r]elevant art' means anything related with sliding door, opening architecture when somebody's going to ask for, you know, doors, raised tracks, anything that is related probably with the cabinets" (Ex. 2001, 23:20–23, 81:11–13); (d) Mr. Poenariu's delineation of the differences between using and designing sliding doors (Ex. 2001, 85:1–87:2); and (e) Mr. Poenariu's technical explanation concerning Exhibit 1007 and known problems (Ex. 2001, 112:3–23, 129:4–131:2).

Against these facts in favor of Petitioner, Patent Owner does not submit any facts in its favor. Patent Owner is correct that the weight accorded some of the underlying facts, concerning certain factors, should be discounted based on Mr. Poenariu's cross-examination testimony. For example, we agree with Patent Owner that it would seem Mr. Poenariu should have been able to remember the names of more individuals who he had worked "closely" with on installations in his career. Ex. 2001, 95:10–19. And we further agree with Patent Owner that providing sufficient evidence in support of its position is a burden that Petitioner bears.

Nevertheless, even with a generous discounting of those factors identified expressly by Patent Owner, we have no trouble finding that, when all the evidence is weighed in the aggregate, Petitioner has more than met its burden of showing, by a preponderance of the evidence, that its proffered level of skill of ordinary art at the time of the invention is correct, for substantive reasons set forth above.

Patent Owner asserts further that Mr. Poenariu's testimony is unreliable, because he apparently considered the level of ordinary skill within a relatively large time span of thirteen years, i.e., 1990 to 2003, when his focus should have been on June 11, 2003, and that, by failing to account for the change in the level of ordinary skill during the relevant time, his testimony should be given little weight. PO Resp. 12–13. We disagree. First, we do not find thirteen years to be "a significantly long range of time" in this field. As stated by Mr. Poenariu, "I mean, the rollers in the tracks, you can find them in a book a hundred years old. Adjustments, you can find them long time ago." Ex. 2001, 59:22–25; *see also* Ex. 1012 ¶ 5 (identifying, among other patents, U.S. Patent No. 1,960,860, issued May 29, 1934). We find that assessment credible. Second, even if there was a difference in the level of ordinary skill between the beginning and end of that time range, the end of the range being 2003, logic dictates that the level of ordinary skill at the end would have been higher, indicating that any failure to consider the change up to that point, if any, is superfluous. Third, Patent Owner has not articulated, and we are unable to ascertain independently, how any purported changes in the level of ordinary skill in the art, of which Patent Owner has not identified any, affects the substantive analysis of the grounds set forth herein.

Finally, in its Motion for Observations on Cross Examination, Patent Owner criticizes Mr. Dowd's testimony about the level of ordinary skill in the art in a manner similar to Patent Owner's criticism of Mr. Poenariu's testimony. First, Patent Owner asserts that "Mr. Dowd identified by first name only several POSITA's that he claimed to know, but could not recall significant details of their education and work experience." PO Obs. 7

(citing Ex. 2006, 8:2–15, 10:6–12:8, 13:2–14:5, 53:21–56:6). We agree that this weighs against the credibility of Mr. Dowd on this issue. In light of the all the evidence cited with respect to the level of ordinary skill in the art, however, this factor is afforded minimal weight.

Second, Patent Owner asserts that "Mr. Dowd testified that he did not consider the education level of active workers in the field or the education level of the inventor of the [']944 patent or the rapidity of innovations in the field when he made his determination of the level of skill of a POSITA." PO Obs. 7 (citing Ex. 2006, 58:22–60:4). We agree that the cited testimony shows that Mr. Dowd did not do anything to identify a specific educational level for active workers in the field or the inventor of the '944 patent. Indeed, he testifies that he was informed of the educational level of the inventor of the '944 patent by counsel. Ex. 1034 ¶ 14. The assertion is misplaced, however, as we read Mr. Dowd as, instead, relying on 30-plus-year of experience in the field (Ex. 2006, 59:23–25), which is consistent with the testimony provided in his Declaration. *See, e.g.*, Ex. 1034 ¶¶ 2–6, 12 ("[B]ased on my knowledge and experience gained during the 30+ years working at Southeastern, I have a good understanding of the capabilities of a POSITA in Jun. 2003 and earlier, and I have worked closely with many such persons over the course of my career.").

Third, Patent Owner asserts that "Mr. Dowd testified that other than locating the Alumax reference, he did no research in connection with his Declaration." PO Obs. 7 (citing Ex. 2006, 184:21–23). We have read that portion of the deposition, and are unable to identify testimony that supports that assertion. In any case, Petitioner disagrees, asserting that "Mr. Dowd did consider a significant amount of materials and references and conduct

research into other references not provided to him by Petitioner." Pet. Obs. 9 (citing Ex. 1034 ¶¶ 7–8, Ex. 2006, 17:2–9, 19:11–13); *see also* Ex. 2006 ¶ 14 ("[A]s part of my analysis, I took it upon myself to search for old catalogs and specifications of discontinued products that include the features identified in the '944 Patent's reasons for allowance."). We agree with Petitioner's assessment.

Fourth, Patent Owner asserts that "Mr. Dowd testified that in preparing his declaration, no one gave him any other information that is not in the declaration." PO Obs. 7 (citing 16:8–17). We are unclear as to how this testimony supports Patent Owner's position, as Mr. Dowd expressly identifies the Exhibits he considered, in light of his experience, in arriving at his testimony concerning the level of ordinary skill in the art. Ex. 1034 ¶¶ 1–6, 8–14.

Fifth, Patent Owner asserts that Mr. Dowd's cross-examination testimony concerning "a piece of paper resting on a table is not supported by the table," understanding "anticipates" as the same as "obvious," and considering himself of skill and of extraordinary skill in the art, weighs against the credibility and weight to be afforded Mr. Dowd's testimony with respect to the level of ordinary skill in the art. PO Obs. 4, 8 (citing Ex. 2006, 5:18–7:8, 140:9–13, 191:7–192:16, 222:17–224:21). Petitioner responds that "Mr. Dowd's statement should be read as one of trying to escape a confusing situation, rather than an admission about Mr. Dowd's understanding of the word 'support.'" Pet. Obs. 6, 10 (citing Ex. 2006, 5:18–20, 6:2–22, 7:6–8:1, 44:3–14, 140:9–12). With respect to the "piece of paper resting on a table," we agree with Petitioner's assessment in that we

are unclear as to its relevance to this inquiry. With respect to the other issues, Mr. Dowd testimony is not offered for his legal knowledge.

Sixth, Patent Owner asserts that "Mr. Dowd testified that he did not consider the frequency of new inventions, any evidence of non-obviousness, commercial success or copying as part of his obviousness analysis." PO Obs. 8 (citing Ex. 2006, 34:9–35:24); *see also* PO Obs. 1–2 (citing Ex. 2006, 49:1–4) (new teachings should be considered). Petitioner responds that "Mr. Dowd testified that he was aware of the frequency of new products released by Basco (33:7–22); a company he previously testified was a top-ten company in the field," and provides additional background concerning "Mr. Dowd's familiarity with the field and awareness of the solutions available to a POSITA by June 2003." Pet. Obs. 10–11 (citing Ex. 2006, 25:15–17, 27:20–28:3, 30:24–31:7, 33:7–22, 51:4–22, 53:19–53:20). We have read all of the cited testimony, and agree that Petitioner's assessment is accurate.

3. Conclusion

For the reasons set forth above, we find that Petitioner's proffered assessment of the level of ordinary skill in the art at the time of the invention is supported by the record, and we adopt and apply that assessment.

B. Claim Construction

In an *inter partes* review, a claim in an unexpired patent shall be given its broadest reasonable construction in light of the specification of the patent in which it appears. 37 C.F.R. § 42.100(b) (2016); *see also Cuozzo Speed Techs., LLC v. Lee*, 136 S. Ct. 2131, 2142 (2016) (affirming that USPTO has statutory authority to construe claims according to 37 C.F.R. § 42.100(b)). Under the broadest reasonable construction standard, claim terms are generally given their ordinary and customary meaning, as would have been

understood by one of ordinary skill in the art in the context of the entire disclosure. *In re Translogic Tech., Inc.*, 504 F.3d 1249, 1257 (Fed. Cir. 2007). Any special definition for a claim term must be set forth in the specification with reasonable clarity, deliberateness, and precision. *In re Paulsen*, 30 F.3d 1475, 1480 (Fed. Cir. 1994). We must be careful not to read a particular embodiment appearing in the written description into the claim if the claim language is broader than the embodiment. *In re Van Geuns*, 988 F.2d 1181, 1184 (Fed. Cir. 1993). For the purposes of this Decision, we determine that only the following claim terms need express interpretation. *See Vivid Techs., Inc. v. Am. Sci. & Eng'g, Inc.*, 200 F.3d 795, 803 (Fed. Cir. 1999) ("[O]nly those terms need be construed that are in controversy, and only to the extent necessary to resolve the controversy.").

1. "track members"

Independent claims 1, 12, 19, and 22 each recite "track members." Petitioner asserts that the parties have agreed to, and advocates for, the following claim construction of "track member" in a related district court proceeding: "a constituent piece with a groove serving as a guide." Pet. 21, 23 (citing Ex. 1008); *see also* Ex. 1003 ¶ 81 (asserting the same).[10] Patent Owner does not explicitly challenge this construction. We have reviewed the relevant claim language, the portions of the '944 patent cited by Petitioner, and all other evidence provided by Petitioner, and are persuaded that Petitioner's proposed construction is correct for the reasons stated.

[10] At oral hearing, Petitioner confirmed that, despite the differences in standards, it was affirmatively advocating for the Board to adopt, in this proceeding, the construction of certain claim terms that were agreed to in district court. Tr. 45:22–46:13.

Through its assertions concerning the prior art, however, Patent Owner asserts that each of the recited "track members" should be further construed to consist only of one unitary piece, in that a structure that includes more than one discrete piece cannot correspond properly to one of the recited "track members." PO Resp. 23–28. Figure 2 of Van Weelden below is a cross-sectional view of a tub enclosure including movable doors. Ex. 1011, 2:6–10.

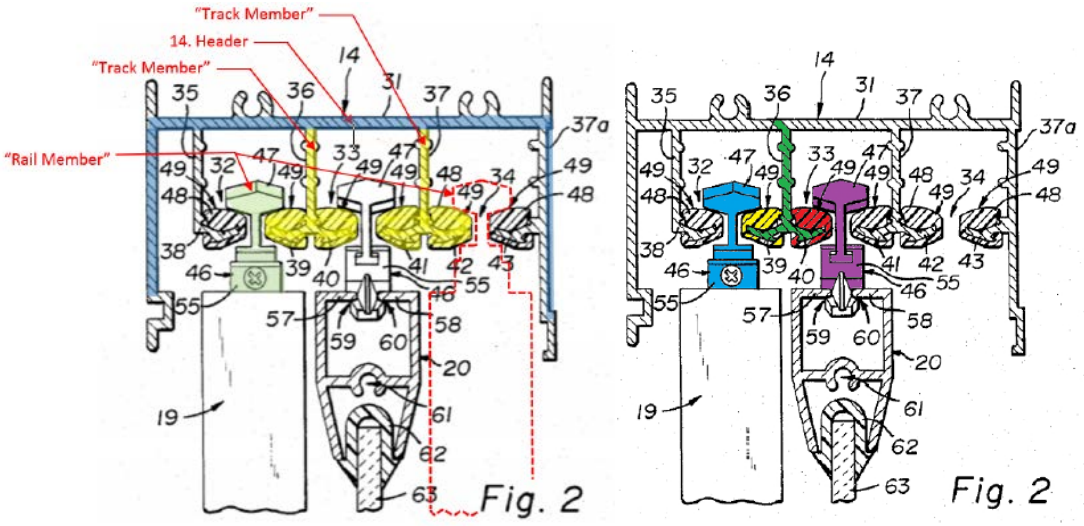

Set forth above are two different versions of Figure 2 of Van Weelden, annotated and colored by Petitioner and Patent Owner respectively. Pet. 37; PO Resp. 24. In short, Patent Owner asserts that the yellow portion in the figure on the left cannot correspond to one of the recited "track members," because, as shown in the figure on the right, that purported "track member" is actually composed of three pieces, plastic bearing insert 48 (yellow) surrounding track flange 39, supporting web 36 (green), and plastic bearing insert 48 (red) surrounding track flange 40.

Petitioner disagrees with Patent Owner's assertions because (1) the independent claims recite the term "comprising," indicating that the presence of additional elements is superfluous, (2) "there is nothing in the

claims or a clear disclaimer in the specification to support PO's narrower interpretation," (3) Patent Owner's assertion largely consists of attorney argument without supporting countervailing evidence, for example, Patent Owner does not even make a single citation to the '944 patent, and (4) Patent Owner's proposed construction is narrower than that agreed to in the district court proceeding, which is consistent with the Board operating on a broader claim construction standard. Pet. Reply 19–24 (citing Ex. 1001, 6:59–62, 7:42–50; Ex. 1011, Fig. 2). We agree with Petitioner.

Independent claims 1, 12, 19, and 22 each recite "track members" having various functional and structural relationships with other recited pieces, for example, "rail members" (claims 1, 12, 19), "door panels" (claim 12), "header" (claim 19), and "panel member" (claim 22). Nowhere, however, does any of those independent claims recite any limitations concerning the number of pieces that make up the recited "track member." Generally, a claim term is not construed to include limitations absent from the claim. *SRI Int'l v. Matsushita Elec. Corp.*, 775 F.2d 1107, 1121 (Fed. Cir. 1985) (en banc) ("It is the claims that measure the invention") (emphasis omitted).

The '944 patent mentions "track member" multiple times in the section titled "BRIEF SUMMARY OF THE INVENTION." In the section titled "DETAILED DESCRIPTION OF THE INVENTION," the '944 patent discusses front track 30, rear track 32, rear track 34, first inner track 230, second inner track 232, third inner track 240, fourth inner track 242, front track 308, and rear track 318. Neither party has identified, nor are we unable to ascertain independently, any guidance in the aforementioned portions of the '944 patent concerning any limitations regarding the number of pieces

that make up the recited "track member." At best, Figure 3 does appear to disclose that rear track 32 is a single piece, with other pieces, such as rollers 34, spring-loaded stop clips 50, and hex screws 56, attached thereto. We are persuaded, however, that these drawings alone lack the required "reasonable clarity, deliberateness, and precision" to limit "track members," in the manner asserted by Patent Owner. *See In re Paulsen*, 30 F.3d 1475, 1480; *see also Superguide Corp. v. DirecTV Enters., Inc*., 358 F.3d 870, 875 (Fed. Cir. 2004) (we must be careful not to read a particular embodiment appearing in the written description into the claim if the claim language is broader than the embodiment.).

Moreover, the '944 patent states further the following:

> Although the description above contains many details, these should not be construed as limiting the scope of the invention but as merely providing illustrations of some of the presently preferred embodiments of this invention. Therefore, it will be appreciated that the scope of the present invention fully encompasses other embodiments which may become obvious to those skilled in the art, and that the scope of the present invention is accordingly to be limited by nothing other than the appended claims, in which **reference to an element in the singular is not intended to mean "one and only one" unless explicitly so stated, but rather "one or more."**

Ex. 1001, 10:11–22; emphasis added. While we acknowledge that the aforementioned portion of the '944 patent is "boilerplate," given that this disclosure aligns with the general canon of claim construction, that a claim term is not construed to include limitations absent from the claim, we determine that "track member" is properly construed as "a constituent piece with a groove serving as a guide," and is not limited to a single piece.

2. "header tracks"

Independent claims 1, 12, 19, and 22 each recite "header tracks." Petitioner asserts that the parties have agreed to, and advocates for, the following claim construction of "header track" in a related district court proceeding: "a horizontal structural or finish piece over an opening with a groove serving as a guide." Pet. 22–23 (citing Ex. 1008); *see also* Ex. 1003 ¶ 71 (asserting the same). Patent Owner does not explicitly challenge this construction. We have reviewed the relevant claim language, the portions of the '944 patent cited by Petitioner, and all other evidence provided by Petitioner, and are persuaded that Petitioner's proposed construction is correct for the reasons stated.

Through its assertions concerning the prior art, Patent Owner asserts that "the specification and drawings of the '944 patent clearly and consistently describe the header tracks [as] being completely separate [spatially] and in construction from the first and second track members." PO Resp. 28. Patent Owner, however, does not identify any specific portions of the '944 patent in support of this assertion. Petitioner disagrees with Patent Owner's assertion for reasons analogous to those asserted for "track members." Pet. Reply 19–24 (citing Ex. 1001, 6:59–62, 7:42–50; Ex. 1011, Fig. 2). We agree with both parties, in part.

Independent claims 1, 12, 19, and 22 each recite "header tracks" having various functional and structural relationships with other recited components, for example, "header" (claims 1, 12, 19, 22), "rail members" (claims 1, 12, 19), and "panel member" (claim 22). Nowhere, however, do any of those independent claims recite any limitations delineating any particular relationship between "header tracks" and "track members," spatial

or otherwise. Generally, a claim term should not be construed to include limitations not recited in the claim. *SRI Int'l*, 775 F.2d at 1107, 1118.

The '944 patent mentions "header track" multiple times in the section titled "BRIEF SUMMARY OF THE INVENTION." In the section titled "DETAILED DESCRIPTION OF THE INVENTION," the '944 patent discusses front header track 14, rear header track 16, front header track 204, middle header track 206, and rear header track 208. Neither party has identified, nor are we unable to ascertain independently, any guidance in the aforementioned portions of the '944 patent concerning any limitations regarding any relationship, spatial or otherwise, between "header tracks" and "track members."

Having said that, Figures 1–3 do disclose that header tracks 14, 16 are completely separate spatially from tracks 30, 32, and, as a matter of physics, we agree that two physical objects cannot occupy the same space. Accordingly, we determine that inclusion of completely separate spatially from "track members" in a construction of "header track" is proper, though logically unnecessary.

We are not similarly persuaded with respect to "completely separate . . . in construction," in that while Figures 1–3 do disclose that header tracks 14, 16 that are "completely separate . . . in construction" from tracks 30, 32, nevertheless, we are persuaded that these drawings alone lack the required "reasonable clarity, deliberateness, and precision" to limit "header tracks" in the manner asserted by Patent Owner. *See In re Paulsen*, 30 F.3d at 1480; *see also In re Van Geuns*, 988 F.2d at 1184 ("We must be careful not to read a particular embodiment appearing in the written

description into the claim if the claim language is broader than the embodiment.”).

We determine that “header tracks” is properly construed as “a horizontal structural or finish piece over an opening with a groove serving as a guide,” which is limited to being completely separate spatially from track members, but not limited to “completely separate . . . in construction.”

3. “slidingly couple”

Independent claims 1, 12, 19, and 22 each recite “slidingly couple.” Petitioner proffers the following construction for “slidingly couple”: “to join in a fashion that allows a rail member to slide in relation to a track member.” Pet. 23; *see also* Ex. 1003 ¶ 82 (asserting the same); Pet. Supp. Reply 7–8. Patent Owner does not explicitly challenge this construction. We have reviewed the relevant claim language, the portions of the ’944 patent cited by Petitioner, and all other evidence provided by Petitioner, and are persuaded that Petitioner’s proposed construction is correct for the reasons stated.

Through its assertions concerning the prior art, Patent Owner asserts that “slidingly couple” requires physical contact. PO Resp. 25–26; PO Supp. Resp. 3–9. Petitioner’s reply, with which we agree, is that “slidingly couple” is not so limited. For example, none of the claims recite such a limitation for “slidingly couple.” In another example, the following constitutes the only disclosure of “couple” in the entire section of the ’944 patent entitled “DETAILED DESCRIPTION OF THE INVENTION”: “This configuration of alternating rollers on front and rear tracks provides two direction movement of the middle rail 22 and **couples** front, rear tracks 30, 32 to middle rail 22 to allow simultaneous gliding, interlocking and

adjustability."[11] Ex. 1001, 6:48–52; emphasis added. While, at first glance, "interlock" may appear to potentially require physical contact, the use of "interlock" in the '944 patent consistently refers to pieces that are not in physical contact. *See, e.g.*, Ex. 1001, 6:32–33 ("Three slider rails, front rail 20, middle rail 22 and rear rail 24 are shown interlocked together.").[12]

We determine that "slidingly couple" is properly construed as "to join in a fashion that allows a rail member to slide in relation to a track member," and does not require physical contact.

4. "couple"

Independent claim 1 recites "first and second rail members adapted to slidingly couple to the first and second header tracks respectively; first and second track members adapted to couple to said first and second rail members respectively." Independent claims 12, 19, and 21 recite similar limitations. Petitioner asserts that "couple" should be construed as "join together." Pet. 22 (citing Ex. 1008). Patent Owner does not explicitly challenge this construction. We have reviewed the relevant claim language, the portions of the '944 patent cited by Petitioner, and all other evidence provided by Petitioner, and are persuaded that Petitioner's proposed construction is correct for the reasons stated.

---

[11] The other references to "couple" in other portions of the '944 patent are even less illuminating.

[12] Petitioner asserts that the parties have agreed to, and advocates for, the following claim construction of "interlock" in a related district court proceeding: "connect two things together." Pet. 21–22 (citing Ex. 1008); *see also* Ex. 1003 ¶ 72 (asserting the same). "Connect" requires less of a physical relationship than "join."

Through its assertions concerning the prior art, Patent Owner asserts that the meaning of both "couple" and "join together," as applied to the prior art, is "cannot move relative to each other." PO Supp. Resp. 5–6. Petitioner's reply, with which we agree, is that "couple" is not so limited. Pet. Supp. Reply 8 (citing Ex. 1008, 3; Ex. 1034 ¶¶ 43–44)). For example, none of the claims require such a reading of "couple." Indeed, the term "couple" is broader than "slidingly couple," and "slidingly couple" does not require the two parts that are "coupled" to be restricted in movement relative to each other.[13] In another example, the following constitutes the only disclosure of "couple" in the entire section of the '944 patent entitled "DETAILED DESCRIPTION OF THE INVENTION": "This configuration of alternating rollers on front and rear tracks provides two direction movement of the middle rail 22 and **couples** front, rear tracks 30, 32 to middle rail 22 to allow simultaneous gliding, interlocking and adjustability." Ex. 1001, 6:48–52; emphasis added. We find that the '944 patent discloses that front, rear tracks 30, 32 move relative to middle rail 22, despite them being "coupled."

Patent Owner identifies the following portion of paragraph 67 of the original specification as supporting its position: "where it describes fasteners, such as hex screws 56 which 'are used to attach tracks 30, 32 to rails 20, 24." PO Supp. Resp. 6 (citing Ex. 1001, 7:18–19, Fig. 3). The support is misplaced, as that portion of the '944 patent uses terms such as "attach," "secure," and "fasteners," and not "couple."

[13] We agree with Patent Owner that "coupled" cannot, as a matter of law, mean the same things as "slidingly coupled." PO Supp. Resp. 6.

We determine that "couple" is properly construed as "join together," and does not indicate that two parts so joined "cannot move relative to each other."

5. "wherein said first and second track members are recessed in said first and second door panels, respectively"

Independent claim 12 recites "wherein said first and second track members are recessed in said first and second door panels, respectively." Independent claim 22 recites the same, but omits the word "door." Petitioner proffers the following construction for this claim limitation: "a constituent piece with a groove serving as a guide (track) is set back into a plane of a surface of a door panel (or rail member included as part of a panel) onto which it is fixed or located." Pet. 20, 23–25; *see also* Ex. 1003 ¶¶ 85–87 (asserting the same); Pet. Supp. Reply 5–7. Patent Owner does not explicitly challenge this construction. We have reviewed the relevant claim language, the portions of the '944 patent cited by Petitioner, and all other evidence provided by Petitioner, and are persuaded that Petitioner's proposed construction is correct for the reasons stated.

Through the parties' assertions concerning the prior art, there is a dispute as to whether at least some or all of a track member must be recessed in a panel, defined above as including the rail member, in order to meet the claim limitation. Pet. 15–16, 19–20, 23–25, 60–62; Dec. 11, 21–22; PO Supp. Resp. 7–8, 15; Pet. Supp. Reply 5–7; Supp. Tr. 8:11–11:24. Specifically, Petitioner is asserting the former "at least some" is correct, while Patent Owner is asserting the same for the latter "all." The former is broader than the latter, as a track member completely recessed within a panel would also have at least some of the track member recessed within a panel.

We begin with the express claim terms, which do not specify an amount of track member that must be "recessed in said first and second door panels." The same is true for Petitioner's proffered construction, which does not specify an amount of track member that must be "set back into a plane of a surface of a door panel (or rail member included as part of a panel) onto which it is fixed or located" in order to be considered "recessed in said first and second door panels."

Of course, a claim term must be read in light of the Specification. Here, aside from the claims themselves, the '944 patent only uses "recessed" in the following two instances: "[f]ront track 308 (shown in phantom for clarity) is shown recessed into panel 302 near the top edge" (Ex. 1001, 9:14–15); "[r]ear track 318 (shown in phantom) is recessed into panel 312 near the top edge" (Ex. 1001, 9:25–26). These portions of the '944 patent refer to features of Figure 6, which is set forth below:

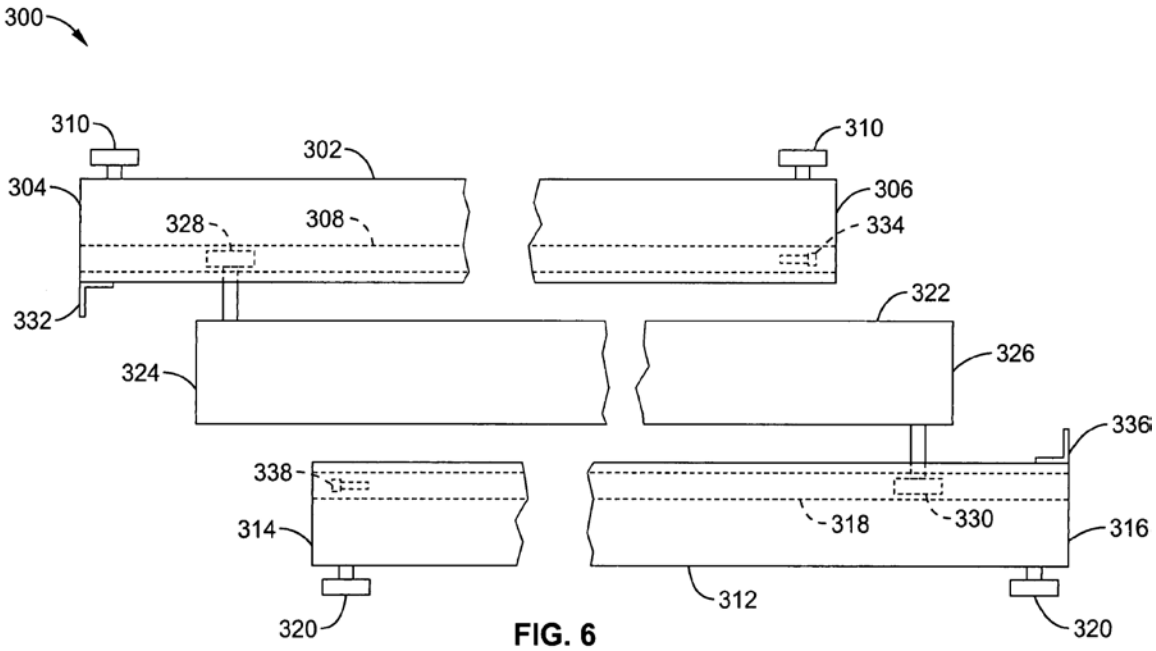

FIG. 6

Figure 6 is a schematic plan view of a three panel slide assembly.

Figure 6 discloses that tracks 308, 318 are "set back into a plane of a surface of" panels 302, 312, in that tracks 308, 318 are between what are shown above as the "outer" surfaces of panels 302, 312. Accordingly, when the above limitation is considered solely on the basis of Figure 6, it would appear to support Patent Owner's construction.

Below, however, is a perspective view of Figure 1 of the '944 patent:

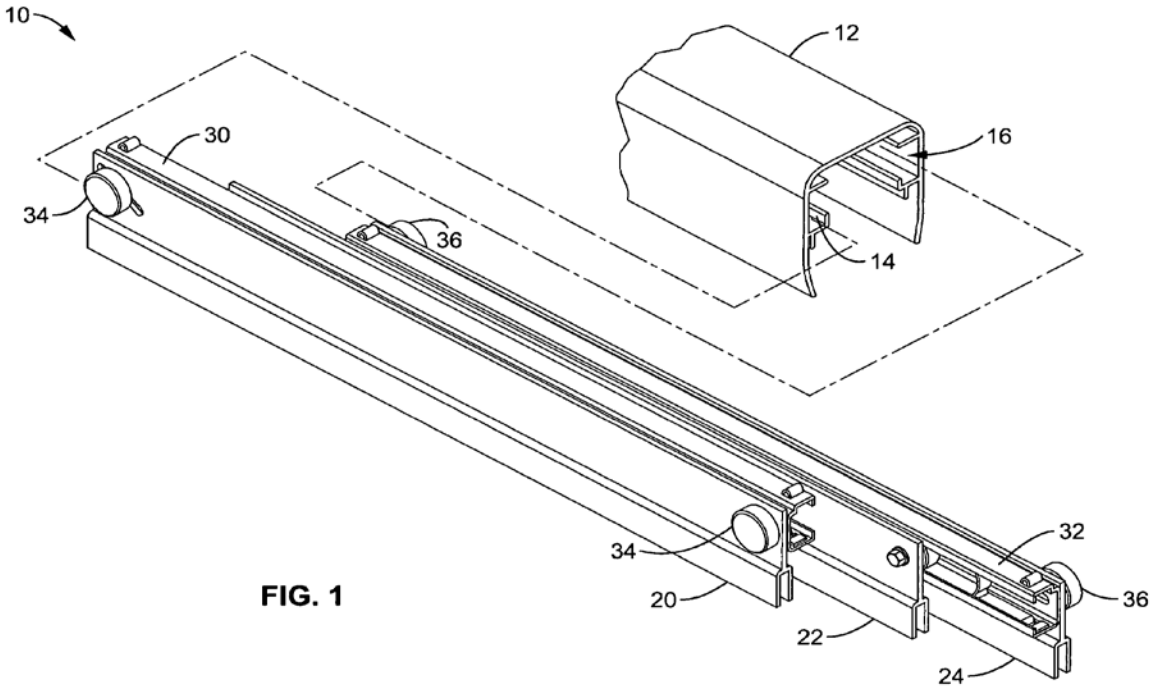

FIG. 1

Figure 1 above is an assembled perspective view of a triple slide assembly. Consistent with our construction above, rails 20, 22, 24 are each a part of a panel. As shown in this figure, only some of each of track members 30, 32 is clearly "set back into a plane of a surface of" an outermost portion of respective rail 20, 24. Accordingly, when the above limitation is considered solely on the basis of Figure 1, it would appear to support Petitioner's construction.

In this instance, it is unnecessary to determine which interpretation of the '944 patent is correct. It is enough that both interpretations are credible,

and under a broadest reasonable construction, we select the broader "at least some."

Accordingly, we construe "wherein said first and second track members are recessed in said first and second door panels, respectively" as "a constituent piece with a groove serving as a guide (track), at least some of which is set back into a plane of a surface of a door panel (or rail member included as part of a panel) onto which it is fixed or located."

C. The Parties' Post-Institution Arguments

In our Decision on Institution, we concluded that the arguments and evidence advanced by Petitioner demonstrated a reasonable likelihood that claims 1–3, 5, 7–9, 11–14, and 16–26 were unpatentable over certain combinations of Van Weelden, Sterling, and Jang. Dec. 26. We then instituted trial on the remaining claims and grounds, some of which additionally included Comeau. *SAS* Order. We must now determine whether Petitioner has established by a preponderance of the evidence that the challenged claims are unpatentable over the grounds asserted in the Petition. 35 U.S.C. § 316(e). We previously instructed Patent Owner that "any arguments for patentability not raised in the [Patent Owner Response] will be deemed waived." Paper 10, 6. Additionally, the Board's Trial Practice Guide states that the Patent Owner Response "should identify all the involved claims that are believed to be patentable and state the basis for that belief." Office Patent Trial Practice Guide, 77 Fed. Reg. 48,756, 48,766 (Aug. 14, 2012).[14]

[14] The same applied to the Further Response filed after our *SAS* Order.

In its Patent Owner Response and Further Response, Patent Owner did not contest Petitioner's contentions that certain claim limitations are described in the prior art. We find that the Petition identifies where each of these uncontested limitations is disclosed or suggested in the prior art, for the grounds instituted. *See* Pet. 11–70 (citing Exs. 1009–1012) (unchallenged portions only). Based on the preponderance of the evidence before us, we conclude that the prior art identified by Petitioner describes all limitations of the reviewed claims that were not contested by the Patent Owner in the Patent Owner Response or Further Response. *In re NuVasive*, 841 F.3d 966, 974 (Fed. Cir. 2016). We address only the contested limitations below.

D. Claims 1–3, 5, 7–9, 11–13, 17–22, 25, and 26 as Anticipated by Van Weelden

Petitioner challenges claims 1–3, 5, 7–9, 11–13, 17–22, 25, and 26 of the '944 patent as anticipated by Van Weelden. Pet. 11–12, 33–45, 50–54, 56–70. Patent Owner responds. PO Resp. 20–30 (citing Exs. 1001, 1011). Petitioner replies. Pet. Reply 19–24 (citing Exs. 1001, 1011).

1. Van Weelden (Ex. 1011)

Van Weelden relates generally to "a structure wherein the angle at which the doors are mounted may be readily adjusted to compensate for out-of-plumb installations without the necessity for disassembly of the door and rail structure." Ex. 1011, 1:9–13. Figure 2 of Van Weelden depicts a cross-sectional view of a portion of a tub enclosure provided with movable doors, and is set forth below.

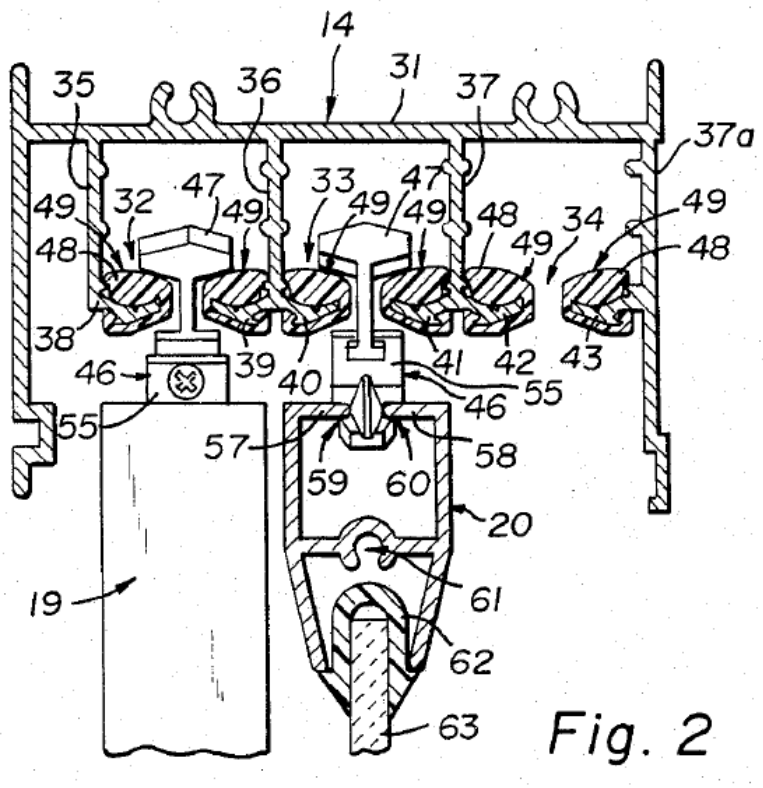

Ex. 1011, Fig. 2.

As shown above, the tub enclosure includes long front header 14 mounted between walls. Ex. 1011, 2:52–53. Long front header 14 includes top web 31 having outer supporting web 37a and inner supporting webs 35, 36, 37 extending therefrom, where all supporting webs 35, 36, 37, 37a define track openings 32, 33, 34 therebetween. Ex. 1011, 2:59–62. Supporting webs 35, 36, 37, 37a each have at least one transverse track flange 38, 39, 40, 41, 42, 43 extending therefrom. Ex. 1011, 2:59–63. Supporting doors 19, 20 are attached to glides 47 via adjustment apparatus 46, and glides 47 slide in respective track openings 32, 33, 34. Ex. 1011, 2:64–68.

In another embodiment, glides 47 may be replaced with mounted rollers 68. Ex. 1011, Fig. 4, 3:26–29.

2. Analysis

Petitioner asserts that claims 1–3, 5, 7–9, 11–13, 17–22, 25, and 26 are anticipated by Van Weelden. Pet. 11–12, 33–45, 48, 50–54, 56–70 (citing Exs. 1003, 1011). For example, Petitioner provides the following copy of Figure 2 of Van Weelden, annotated to identify, among several items, supporting doors 19, 20, header 14, supporting webs 35, 37a, and glides 47.

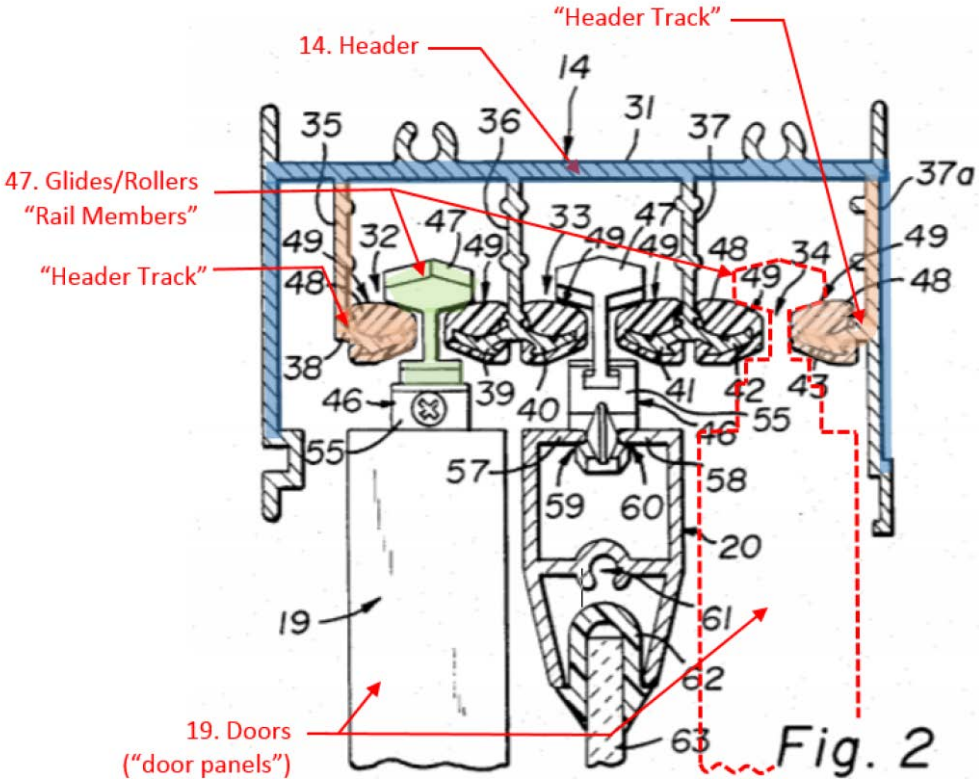

Above is an annotated version of Van Weelden Figure 2.

Pet. 35. Independent claim 1 recites "[a] slide assembly for three sliding panels adapted to couple to a header having first and second header tracks" and "first and second rail members adapted to slidingly couple to the first and second header tracks respectively." Petitioner asserts that supporting doors 19, 20 correspond to the recited "three sliding panels," that header 14 corresponds to the recited "header," that supporting webs 35, 37a correspond

respectively to the recited "first and second header tracks," and that glides 47 of the outer supporting doors 19 correspond to the recited "first and second rail members." Pet. 32–35.

As shown below, Petitioner then provides another copy of Figure 2 of Van Weelden, annotated to identify, among several items, supporting webs 36, 37, and glides 47 of supporting doors 19, 20.

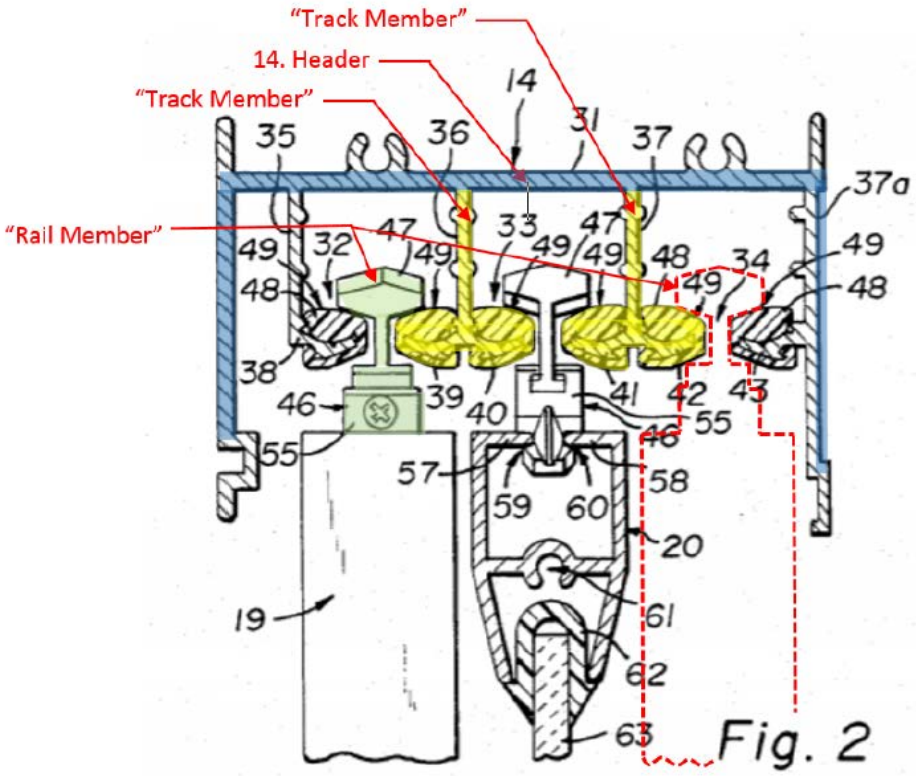

Above is an annotated version of Van Weelden Figure 2.

Pet. 37. Independent claim 1 then recites "first and second track members adapted to couple to said first and second rail members respectively" and "a third rail member adapted to slidingly couple to said first and second track members; wherein said third rail member is supported by said first and second track members." Petitioner asserts that supporting webs 36, 37 correspond to the recited "first and second track members," and that glide 47

of inner supporting door 20 corresponds to the recited "third rail member." Pet. 35–40.

Independent claim 1 further recites "wherein said first and second track members remain aligned with the header when the alignment of said first or said second rail members is adjusted." Petitioner asserts that "Van Weelden discloses 'a pair of adjustment apparatus structures, either of the glide type shown in FIGS. 15 and 17, or of the roller type, as shown in FIG. 16 [which] are mounted at each end of an upper door frame.'" Pet. 41–42 (citing Ex. 1011, 4:30–33). Petitioner asserts that the language of independent claim 19 largely tracks independent claim 1. Pet. 66–67.

Petitioner asserts that the language of independent claim 12 is largely similar to that of independent claim 1, except that independent claim 12 replaces the last limitation of independent claim 1 with "wherein said first and second track members are recessed in said first and said second door panels respectively." Pet. 57–62. For that limitation, Petitioner asserts the following: "Van Weelden discloses members 55 (panel holders) in the glides 47 (tracks) for supporting the corresponding door panels. *See*, e.g., Ex. 1011, Fig. 2, 3:12-19. As shown in annotated Fig. 2, the bottom portions of the track members are recessed into the rail members forming part of the doors. Ex. 1003, ¶ [0190]." Pet. 60–61. Petitioner asserts that the language of independent claim 22 largely tracks independent claim 12. Pet. 68.

For dependent claims 2, 3, 5, 7–9, 11, 13, 17, 18, 20, 21, 25, and 26, Petitioner performs a similar mapping of claim limitations to Van Weelden. Pet. 42–45, 48–54, 56–57, 63, 66–70.

Patent Owner first asserts that the yellow-colored portion of Figure 2 of Van Weelden, set forth on page 37 of the Petition, cannot correspond properly to the recited "track member," because that yellow-colored portion of Figure 2 of Van Weelden includes more than one piece, while each of the recited "track members" is limited to one piece. PO Resp. 23–25. Figure 2 of Van Weelden, reproduced below, is a cross-sectional view of a tub enclosure including movable doors. Ex. 1011, 2:6–10.

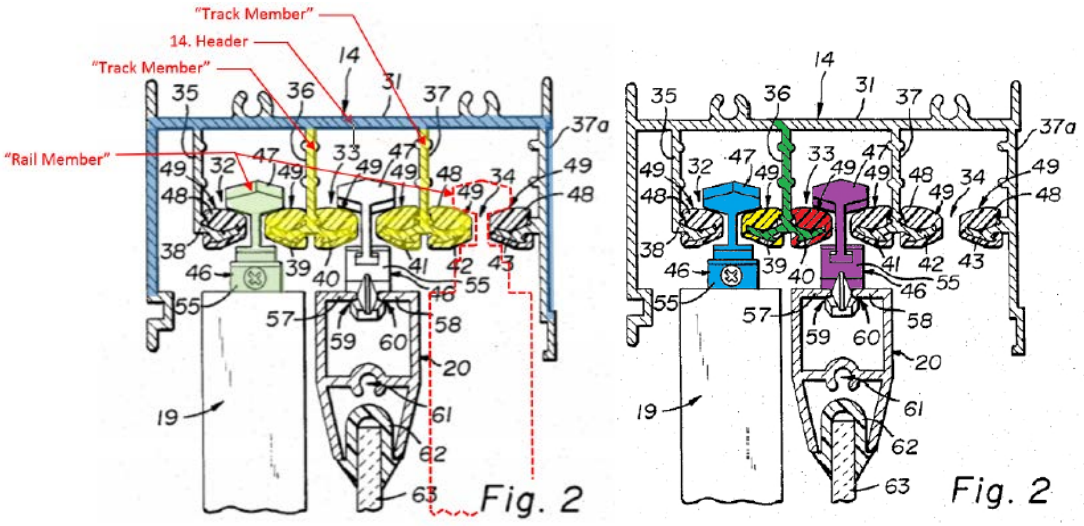

Pet. 37; PO Resp. 24. Set forth above are two different versions of Figure 2 of Van Weelden, annotated and colored by Petitioner and Patent Owner respectively. In short, Patent Owner asserts that the yellow portion in the figure on the left cannot correspond to one of the recited "track members," because, as shown in the figure on the right, that purported "track member" is actually composed of three pieces: supporting web 36 (green), plastic bearing insert 48 (yellow) surrounding track flange 39 of supporting web 36 (green), and plastic bearing insert 48 (red) surrounding track flange 40 of supporting web 36 (green). Petitioner responds that Patent Owner's assertion is misplaced, because it is premised on a flawed claim construction. Pet. Reply 20–24. We agree with Petitioner.

As set forth above, we determine that "track member" is "a constituent piece with a groove serving as a guide," and is not limited to a single piece. Petitioner's proffered combination of supporting web 36 and plastic bearing inserts 48 of Van Weelden meets that construction.

Relatedly, Patent Owner next asserts that because each of the recited "track members" is limited to one piece, the only piece of Van Weelden that properly corresponds to one of the recited "track members" is, for example, plastic bearing insert 48 (yellow) surrounding track flange 39. PO Resp. 25–26. Although Patent Owner does not provide much further detail, we presume that this assertion is premised on the fact that certain independent claims, for example, independent claim 1, recite that each "track member" is slidingly coupled to more than one "rail member," a premise with which we agree. And because Van Weelden, at best, only discloses each plastic bearing insert 48 being slidingly coupled to only one glide 47, i.e., the portion of Van Weelden corresponding to the recited "rail member," Patent Owner is asserting that plastic bearing insert 48 of Van Weelden cannot correspond to the recited "track member."

Petitioner responds that Patent Owner's assertion is misplaced, because it is premised on a flawed claim construction, and that track flanges 39, 40 of supporting web 36, with plastic bearing inserts 48, correspond properly to the recited "track members." Pet. Reply 20–23. We agree with Petitioner. As set forth above, we determine that "track member" is construed as not limited to a single piece. Under such a construction, Petitioner's proffered combination of supporting web 36 and plastic bearing inserts 48 correspond properly to the recited "track members," in that such a

structure is slidingly coupled to at least two glides 47 (i.e., "rail members"), as required by independent claim 1.

In the alternative, even if "track member" is construed as limited to a single piece, Petitioner asserts that supporting web 36 alone can correspond properly to the recited "track member." Pet. Reply 21–23. We agree. Set forth below is an annotated version of Figure 2 of Van Weelden set forth on page 12 of the Petition.

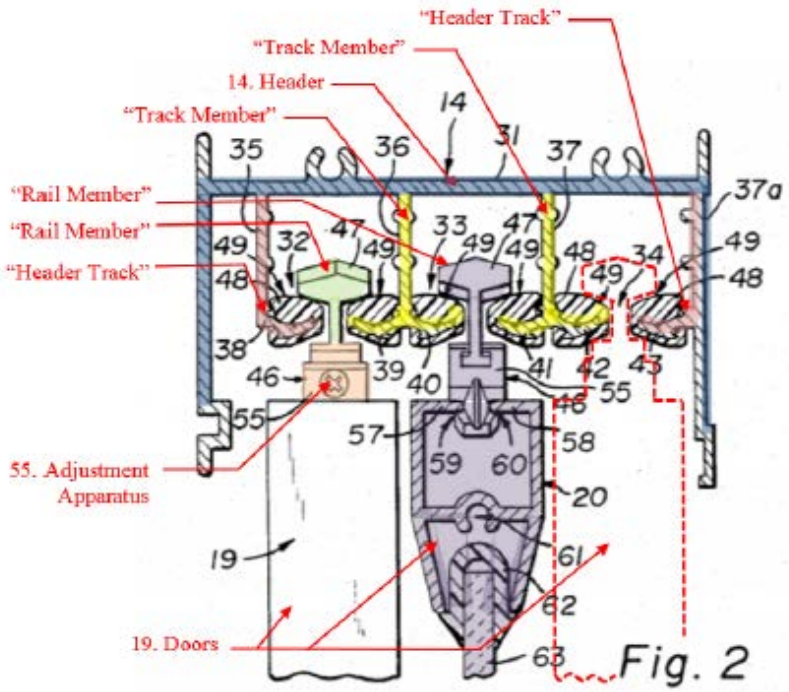

Ex. 1011 Annotated Fig. 2.

Pet. 12. As shown above, Petitioner identifies supporting web 36 alone, without plastic bearing inserts 48, as corresponding to the recited "track member." We are persuaded that meets the above construction of "track member" as "a constituent piece with a groove serving as a guide."

Patent Owner asserts also the following:

> Second, where Van Weelden teaches the use of a track member which does engage elements of more than one door panel (in Figure 4), it teaches the use of a roller assembly, rather than

> sliding rail members for that purpose. It is only reasonable to assume that Van Weelden would be interpreted with respect to the claims of the ’944 patent according to what it actually teaches the reader to do, regardless of the level of skill of the reader.

PO Resp. 26. As an initial matter, we note that Figure 4 of Van Weelden is only cited by Petitioner for certain dependent claims. *See, e.g.*, Pet. 42–44 (citing Figure 4 of Van Weelden for limitations concerning “rollers”). Moreover, we read Patent Owner’s assertion as indicating that while rollers 68 in Figure 4 of Van Weelden are in physical contact with track flanges 38, 39 of supporting webs 35, 36, glides 47 are not in similar physical contact with track flanges 38, 39 of supporting webs 35, 36, as plastic bearing inserts 48 exist in between, and, thus, the purported “track members” and “rail members” are not in physical contact, as required by the “slidingly couple” limitation of independent claim 1. Patent Owner’s assertions are misplaced, because they are premised on flawed claim constructions. As set forth above, we determine that “track member” is “a constituent piece with a groove serving as a guide,” and is not limited to a single piece. Petitioner’s proffered combination of supporting web 36 and plastic bearing inserts 48 of Van Weelden meets that construction of “track member.” And as plastic bearing inserts 48 are in physical contact with glides 47 (i.e., the recited “rail members”), the “slidingly couple” limitation of independent claim 1, even under Patent Owner’s construction.

Alternatively, even if “track member” is construed as limited to a single piece, supporting web 36 alone can still correspond properly to the recited “track member,” because, as set forth above, we determine that “slidingly couple” is properly construed as “to join in a fashion that allows a rail member to slide in relation to a track member,” and is not limited to

requiring physical contact. Petitioner's combination of supporting webs 35, 36 and glides 47 of Van Weelden meet that construction of "slidingly couple."

Finally, with respect to this ground of unpatentability, Patent Owner asserts the following with respect to "header tracks":

> In Exhibit 1011, at pages 7–8, the Van Weelden patent refers three "tracks or track openings 32, 33 and 34" in header 14. These tracks are thus clearly "header tracks" and Van Weelden has three of them, in contrast to the two used in the [']944 claims. Van Weelden also uses three glides 47 which are slidingly coupled, one each into the header tracks. However, the Board's interpretation of Van Weelden would take one of the header tracks (the one in the middle) and break it down into two "track members," so as to create the elements required by the '944 patent. One problem with doing that, of course, is that the remaining header tracks are either defined as having a single web element 35 and 37a, respectively, in which case that single web element is incapable of "coupling" the respective rail members, or the first and second track members are both part of the first and second header tracks and part of the pair of track members for the third rail. In the first instance, the Board would have "read out" the word "couple" from the claims, in the second instance, the Board would have given the same parts two different words to describe them. Both alternatives violate basic canons of claim construction, first because every word in a claim must be given meaning and effect, *E.g.*, M.P.E.P. §2143.03, second because a claim interpretation which creates indefiniteness by "double inclusion" is not a reasonable interpretation. *Ex parte Kristensen*, 10 U.S.P.Q. 2d 1701, 1703 (Bd. Pat. App. & Inter. 1989).

PO Resp. 27–28. As set forth above, we construe "header tracks" as "a horizontal structural or finish piece over an opening with a groove serving as a guide," which is limited to being completely separate spatially from track members," but not limited to "completely separate . . . in construction," and

construe "track member" as "a constituent piece with a groove serving as a guide," and not limited to a single piece. Reproduced below is an annotated version of Figure 2 of Van Weelden set forth on page 12 of the Petition.

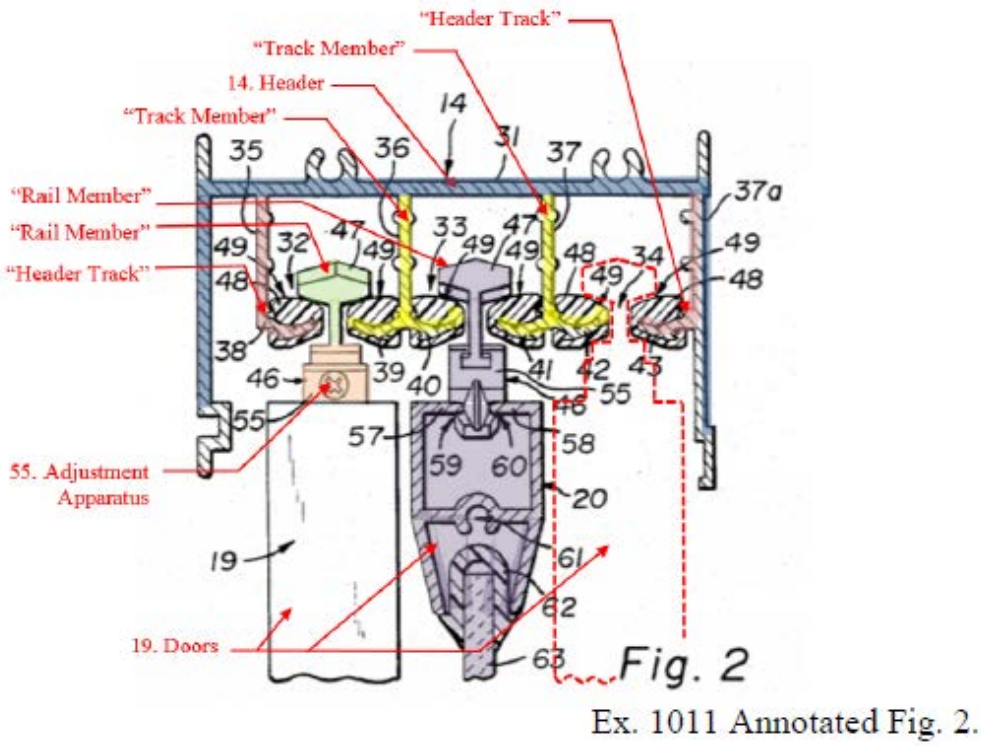

Ex. 1011 Annotated Fig. 2.

Pet. 12. As shown above, the identified "header tracks" and "track members" (with or without plastic bearing inserts 48) meet their respective constructions. Furthermore, when "couple" is properly construed as "join together," Van Weelden's "header tracks," i.e., web elements 35 and 27a, are coupled to the respective "rail member," i.e., glide 47.

3. Conclusion

We are persuaded that Petitioner has met its burden of showing, by a preponderance of the evidence, that 1–3, 5, 7–9, 11–13, 17–22, 25, and 26 are anticipated by Van Weelden.

E. Claims 1–26 as Obvious Over Van Weelden and Sterling

Petitioner challenges claims 1–26 of the ’944 patent as obvious over Van Weelden and Sterling. Pet. 11–14, 26–70. Patent Owner responds. PO Resp. 15–17, 23–30 (citing Exs. 1001, 1009, 1011, 2001); PO Supp. Resp. 3–8, 10–14 (citing Exs. 1001, 1003, 1009, 1011). Petitioner replies. Pet. Reply 5–8, 18–24 (citing Exs. 1001, 1009, 1011, 1023, 1029); Pet. Supp. Reply 8–15 (citing Exs. 1003, 1008, 1011, 1034, 1036, 1037, 1039).[15] With Board authorization (Paper 21, 2), Patent Owner filed a Sur-Reply limited to “new evidence and corresponding arguments set forth in Petitioner’s Reply.” PO Sur-Reply 1–5 (citing Exs. 1009, 1023–1025, 1029).

1. Sterling (Ex. 1009)

Sterling relates generally to an installation guide for tri-panel bath and shower doors. Ex. 1009, 1. A figure set forth on page 8 of Sterling is presented below.

[15] As a part of this dispute, Patent Owner asserts that Mr. Dowd’s admits that he was “‘not qualified to render opinions as to equivalence’ of structural elements shown in the prior art,” dispositively undercutting all of this assertions concerning the prior art. PO Obs. 8–9 (citing Ex. 2006, 214:13–14). Petitioner asserts that Patent Owner’s characterization of Mr. Dowd’s testimony is incomplete and misleading, as it takes one sentence out of context. Pet. Obs. 11–12 (citing Ex. 2006, 9, 13–14). We agree with Petitioner’s assessment.

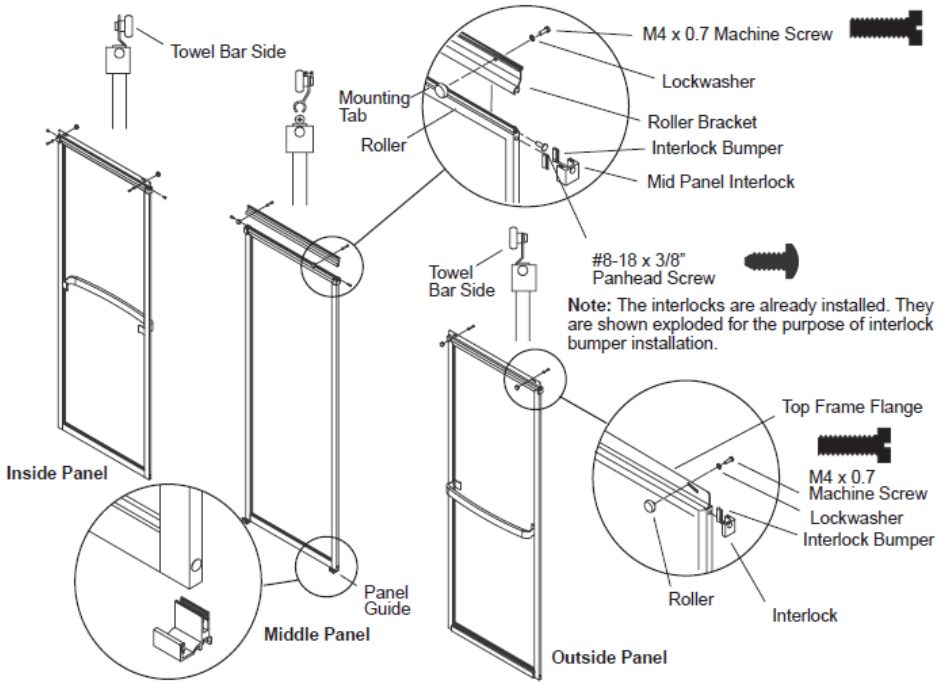

Ex. 1009, 8. As shown above, the figure is an exploded view of a set of tri-panel bath and shower doors, including an inside, middle, and outside panel, an interlock bumper associated with a top of the outside panel, and both an interlock bumper and a mid-panel interlock associated with a top of the middle panel. Ex. 1009, 8. Sterling also discloses "[i]f adjustment is needed, remove the panel. Loosen roller screw(s) and move the roller(s) in slot to align the panel. Tighten screw(s) and re-hang the panel." Ex. 1009, 9.

2. Analysis of Claims 1–3, 5, 7–9, 11, and 19–21

Petitioner asserts that claims 1–3, 5, 7–9, 11, and 19–21 are obvious over Van Weelden and Sterling. Pet. 11–14, 26–57, 66–69. For the most part, Petitioner's assertions track those set forth in the anticipation ground based on Van Weelden for the same claims. Essentially, for these claims, Petitioner sets forth a "backup" position for the following limitation of independent claim 1: "wherein said first and second track members remain

aligned with the header when the alignment of said first or said second rail members is adjusted." For that limitation, Petitioner asserts the following:

> Thus, under the BRI the limitation "wherein said first and second track members remain aligned with the header when the alignment of said first or said second rail members is adjusted" is, if not anticipated in Ground 2, obvious in view of Van Weelden in view of Sterling in Ground 3. Ex. 1003, ¶ [0145]; *see infra* Sections VI. C and IX. A–B, D.

Pet. 42. The relevant portion of Section VI. C. reads as follows: "each of the three sliding panels is held by a roller bracket (rail). Outside, middle and inside panels include elongated slots for adjustment. E.g., partial p. 9 reproduced below describes adjustment of the outside panel using an angled elongated slot and a roller movable therein." Pet. 13. More specifically, Sterling discloses "[l]oosen roller screw(s) and move the roller(s) in slot to align the panel. Tighten screw(s) and re-hang the panel." Ex. 1009, 9. Petitioner asserts that the language of independent claim 19 largely tracks independent claim 1. Pet. 66–67. Petitioner sets forth similar analyses for dependent claims 2, 3, 5, 7–9, 11, 20, and 21. Pet. 11–14, 26–57, 66–70.

Although not exactly clear, we presume that Patent Owner meant for all its assertions with respect to Van Weelden alone to also apply to this ground of unpatentability. To that end, our analysis is the same as set forth above for Van Weelden alone, and need not be repeated here.

With respect to Sterling, for these claims, Patent Owner's response is limited to asserting that Petitioner has not shown that Sterling was publicly accessible, i.e., that Sterling existed on a publicly accessible webpage on the

Internet, prior to the effective date of the ’944 patent. PO Resp. 15–17; PO Sur-Reply 1–5.[16] We address each in turn.

a. Analysis of Patent Owner’s Procedural Assertions Specific to the Public Accessibility of Sterling

Procedurally, Patent Owner asserts that Petitioner’s belated addition of the testimony of Trace Jackson (Ex. 1023) and Christopher Butler (Exs. 1029, 2003) with its Reply is procedurally improper under 37 C.F.R. § 42.23(b) and should not be considered. PO Sur-Reply 1–4. We disagree.

Here, Patent Owner sought, and, indeed, received, a responsive paper to substantively address the purportedly new evidence and corresponding arguments. Paper 21 (authorizing sur-reply); *Belden Inc. v. Berk-Tek LLC*,

[16] At oral argument, Patent Owner appeared to also assert that Petitioner had not met its burden of showing that one of ordinary skill in the art would have been able to locate Sterling. Tr. 38:7–42:13. We have considered Patent Owner’s Response and Sur-Reply, and the only place that even remotely mentions this assertion is at pages 16–17 of the Patent Owner Response, where Patent Owner generally cites case law encompassing multiple inquiries to be made in determining public accessibility that mention, in passing, ability to locate. We have considered the balance of those substantive papers, however, and are unable to ascertain any application of this portion of the case law to the facts of this proceeding. Instead, Patent Owner’s substantive assertions concerning Sterling focus exclusively on whether Sterling existed on a publicly accessible webpage on the Internet prior to the effective date. Petitioner’s response in its Reply, and comments made at oral argument, confirm that understanding, and to change that focus now would violate Petitioner’s due process rights. Accordingly, we consider the issue of “whether one of ordinary skill in the art would have been able to locate Sterling” to have been broached for the first time at oral argument, which is improper, and, thus, do not consider it. Paper 37, 3–4; 77 Fed. Reg. at 48,768 (“A party may rely upon evidence that has been previously submitted in the proceeding and may only present arguments relied upon in the papers previously submitted. No new evidence or arguments may be presented at the oral argument.”).

805 F.3d 1064, 1080 (Fed. Cir. 2015) (holding it was proper for Board to consider new evidence submitted with a reply when the Board "provided [Patent Owner] with a meaningful opportunity to respond to the propriety of [Petitioner's] evidence submitted with [Petitioner's] Reply, in that it granted every request [Patent Owner] made for consideration of the issue"). Furthermore, Patent Owner had the opportunity to address this new evidence at oral argument. *Belden*, 805 F.3d at 1081 (explaining that one avenue for patent owner to respond to new evidence submitted with a reply is to "dispute the substance of the declaration at oral hearing before the Board"). Accordingly, we determine that Patent Owner's procedural rights have been satisfied on this issue, and so we give all due substantive weight to all evidence and arguments set forth in Petitioner's Reply.

b. Analysis of Patent Owner's Substantive Assertions Specific to the Public Accessibility of Sterling

Substantively, Patent Owner asserts that the 2002 copyright date of Sterling is, alone, insufficient to establish public accessibility in 2002, that Mr. Poenariu admitted that he has nothing to add concerning the public accessibility of Sterling in 2002, and that, in any case, the testimony of Mr. Jackson (Ex. 1023) and Mr. Butler (Exs. 1029, 2003) on this issue is neither credible nor sufficient. As an initial matter, we agree with Patent Owner that Mr. Poenariu does not appear to have much to add on this issue, and so we find that his related testimony carries little to no weight.

With respect to the 2002 copyright date, the parties cite competing Board decisions addressing the sufficiency of a copyright notice alone to establish public accessibility. PO Resp. 16–17; Pet. Reply 5–6. We have reviewed each of those decisions, and generally agree with Patent Owner that a copyright notice alone is insufficient. Most of the decisions cited by

Petitioner concern decisions on institution, where all that is required to go to trial is a preliminary showing of public accessibility. The only final written decision cited is *Ford Motor Co. v. Cruise Control Techs. LLC*, Case IPR2014-00291, slip op. at 6–11 (PTAB June 29, 2015) (Paper 44), where the panel did not rely on the copyright notice alone. *See id.* at 10 (In addition to the copyright notice, the panel also relied on the following: "Mr. McNamara testifies that Prometheus was published in 1991, and he explains that 'AICC' systems, such as that referenced at pages 104–111 of Prometheus as a part of Renault's system, were part of a collaboration between various European automotive manufacturers.").

We turn now to Patent Owner's challenges to Trace Jackson (Ex. 1023) and Christopher Butler (Exs. 1029, 2003). For the Declaration of Trace Jackson, Patent Owner sets forth many assertions questioning the credibility of the statements made by Mr. Jackson. PO Sur-Reply 4–5. Largely, we agree. Mr. Jackson indicates he is an employee of a law firm that downloaded a certain document from the Internet Archive. Ex. 1023 ¶¶ 2–4. Patent Owner does not challenge, and we have no reason to doubt, the veracity of those particular assertions. Accordingly, we accord full weight to that portion of Mr. Jackson's testimony.

Mr. Jackson then goes on, however, to opine concerning the operations of the Internet Archive, for example, when certain documents were acquired by the Internet Archive, and the meaning of the URL from the Internet Archive. Ex. 1023 ¶¶ 3–6. Patent Owner asserts that Mr. Jackson does not present a sufficient foundational basis for his assertions as to the operations of the Internet Archive, an assessment with which we agree. PO

Sur-Reply 4–5. Accordingly, we accord Mr. Jackson's testimony concerning the operations of the Internet Archive little or no weight.

By contrast, Mr. Butler is an Office Manager of the Internet Archive. Ex. 1029 ¶ 1. Mr. Butler testifies as to other foundational bases for the assertions set forth in his Declaration. Ex. 2003, 10:7–15, 13:20–25, 14:24–15:9, 15:10–23, 16:3–20, 16:25–21:1, 21:12–22:2, 29:22–31:6, 32:1–34:8. On this basis, we find credible Mr. Butler's testimony concerning the operations of the Internet Archive.

Patent Owner asserts that Mr. Butler's testimony shows that even today, Sterling is not publicly accessible via the internet. PO Sur-Reply 3–4. We are unpersuaded that Patent Owner's assertion is correct, as Mr. Jackson and Mr. Butler both testified that they individually obtained a copy of Sterling from the Internet Archive. Ex. 1023 ¶ 4; Ex.1029 ¶ 6. The fact that Mr. Jackson and Mr. Butler obtained copies of Sterling is evidence that tends to support the finding that Sterling was publicly accessible.

Patent Owner further asserts that "Mr. Butler, in Exhibit 1029, describes what was in the Internet Archive's records, but *never states that only items which were publicly available were collected for the Internet Archive records*." PO Sur-Reply 3. While Patent Owner's assertion is plausible, Mr. Butler testifies that "[t]he archived data made viewable and browseable by the Wayback Machine is compiled using software programs known as crawlers, which surf the Web and automatically store copies of web files, preserving these files as they exist at the point of time of capture." Ex. 1029 ¶ 4. While Mr. Butler admittedly does not expressly use the word "public" or some variation thereof, the fact that a crawler stored a copy of a

Sterling is evidence tending to support the finding that it was publicly accessible.

Patent Owner asserts additionally that none of the documents listed on pages 1–5 of Exhibit A of Exhibit 1029 includes Sterling, which is entitled "Installation Guide 5700 Series Finesse(TM) Tri-Panel Bath and Shower Doors." PO Sur-Reply 3. We agree. Nevertheless, "page 6" subsequent to pages 1–5 of Exhibit A lists a URL, and Mr. Butler testifies that "[a]ttached hereto as Exhibit A are true and accurate copies of printouts of the Internet Archive's records of the HTML files or PDF files for the URLs and the dates specified in the footer of the printout (HTML) or attached coversheet (PDF)." Ex. 1029 ¶ 6. On that basis, and using the timing nomenclature set forth in paragraph 5 of Mr. Butler's Declaration, we find that the document that follows "page 6," i.e., Sterling, was archived on April 13, 2003.

Relatedly, Patent Owner asserts that the URL listed on "page 6" was provided to Mr. Butler by Petitioner. Tr. 38:14–20, 39:17–18. We agree with that assessment. We are unclear, however, as to the relevance of that assessment to the public accessibility of Sterling prior to the effective date of the '944 patent. Indeed, we note further that the URL used by Mr. Jackson and Mr. Butler to obtain a copy of Sterling are identical. *Compare* Ex. 1023 ¶ 5 *with* Ex. 1029, "page 6."

The earliest possible effective date of the '944 patent is June 11, 2003. When we weigh the following factors in the aggregate, we are persuaded that Petitioner has met its burden of showing that Sterling was publicly accessible, at the latest, by April 13, 2003: (1) Sterling's 2002 copyright date set forth with the four-corners of Sterling itself (Ex. 1009, 36); (2) Mr. Jackson's credible testimony that he downloaded Sterling from indicated

URL (Ex. 1023 ¶ 4); (3) Mr. Butler's credible testimony that he copied and printed out Sterling from the indicated URL (Ex. 1029 ¶ 6, "page 6"); and (4) Mr. Butler's credible testimony concerning the timing nomenclature for the URL from which Sterling was obtained, which indicates that Sterling was publicly available on April 13, 2003.

c. Conclusion

We are persuaded that Petitioner has met its burden of showing, by a preponderance of the evidence, that claims 1–3, 5, 7–9, 11, and 19–21 are obvious in view of Van Weelden and Sterling.

3. Analysis of Claims 12, 13, 17, 18, 22, 25, and 26

For independent claim 12, Petitioner does not identify any deficiency of Van Weelden that is purportedly remedied by Sterling. *See generally* Pet. 57–62. Petitioner asserts that the language of independent claim 22 largely tracks independent claim 12. Pet. 68. The same is true for related dependent claims 13, 17, 18, 25, and 26 which do not rely separately on Sterling for any claim limitation. As we have already determined above that these claims are anticipated by Van Weelden alone, we see no need to further analyze these claims on this ground.

4. Analysis of Dependent Claims 4, 6, 14–16, 23, and 24

Petitioner asserts that dependent claims 4, 6, 14–16, 23, and 24 are obvious over Van Weelden and Sterling. Pet. 11–14, 45–48, 51–52, 63–66, 69.

a. Dependent Claim 4

Dependent claim 4 recites "a plurality of stops coupled to said first and second track members; wherein said stops are positioned to limit movement of said third rail member to between said first rail member and

second rail member." Petitioner first asserts that "Van Weelden does not expressly disclose 4[a] *'a plurality of stops coupled to said first and second track members,' it is inherent based on the sliding operation of the embodiments disclosed in Van Weelden*. Ex. 1003, ¶ [0153]." Pet. 46.

In our Decision on Institution, we stated the following:

> This constitutes the entirety of Petitioner's inherency analysis. The relevant portion of paragraph 153 of the Poenariu Declaration does no more than mirror the above language. "A party must . . . meet a high standard in order to rely on inherency to establish the existence of a claim limitation in the prior art in an obviousness analysis— the limitation at issue necessarily must be present, or the natural result of the combination of elements explicitly disclosed by the prior art." *PAR Pharmaceutical, Inc. v. TWI Pharmaceuticals, Inc.*, 773 F.3d 1186, 1195–96 (Fed. Cir. 2014). We are unpersuaded that Petitioner's minimal analysis, which does not even refer to any of the usual terms concerning inherency, such as "necessarily," meets that high standard.

Dec. 15. Patent Owner's assertions largely mirror this language. PO Supp. Resp. 11–12; *see also* Pet. Obs. 5–6 (citing Ex. 2006, 157:22–158:2) (asserting Mr. Dowd admitted that Van Weelden's stops do not limit movement of the third rail).

In reply, Petitioner asserts the following:

> However, Van Weelden's walls 36 and 37 (incorporated in header 14) are within the BRI of "track member," which means "a constituent piece with a groove serving as a guide." Petition, pp. 23, 36–37; Ex. 1003, ¶¶ 81, 138. Coupled to the track members 36 and 37 are linear beads 72 and 73, which are positioned "to provide limits for the axial movement of the

> rollers 68 and hub 67." Ex. 1011, 3:34 37; Ex. 1003, ¶¶ 147, 149; Ex. 1034, ¶ 25.

Pet. Supp. Reply 10;[17] *see also* Pet. Obs. 8 (citing Exs. 156:14–25, 158:3–160:15) (referring to linear beads 72, 73).

While we agree that linear beads 72, 73 limit axial movement of rollers 68 and hub 67, we are unclear as to how they limit movement of glides 47, which Petitioner maps to the recited "rail members," as glides 47 are in a different embodiment from those that include linear beads 72, 73. Furthermore, the sides of glides 47 do not appear to come into contact with the portions of supporting webs 35, 36, 37, 37a on which such beads would be placed, as glides 47 appear to only physically contact plastic bearing insert 48. Indeed, this is borne out by the fact that there are unlabeled protrusions on supporting webs 35, 36, 37, 37a that do not physically contact glides 47. We are unclear how any of those protrusions can limit movement of glides 47 without coming into physical contact with them.

Additionally, dependent claim 4 recites that "said stops are positioned to limit movement of said third rail member to between said first rail member and second rail member." To that, Petitioner asserts the following:

> Likewise, to a POSITA, limiting axial movement of these parts necessarily serves to limit the movement of a rail member to between other rail members by keeping the rail on track. Petition, pp. 32–35 Paper 9, 9–11; Ex. 1034, ¶ 25; Ex. 1011, Figs. 2, 4:

[17] The Petition does not mention linear beads 72, 73 of Van Weelden at all, let alone with respect to this claim limitation.

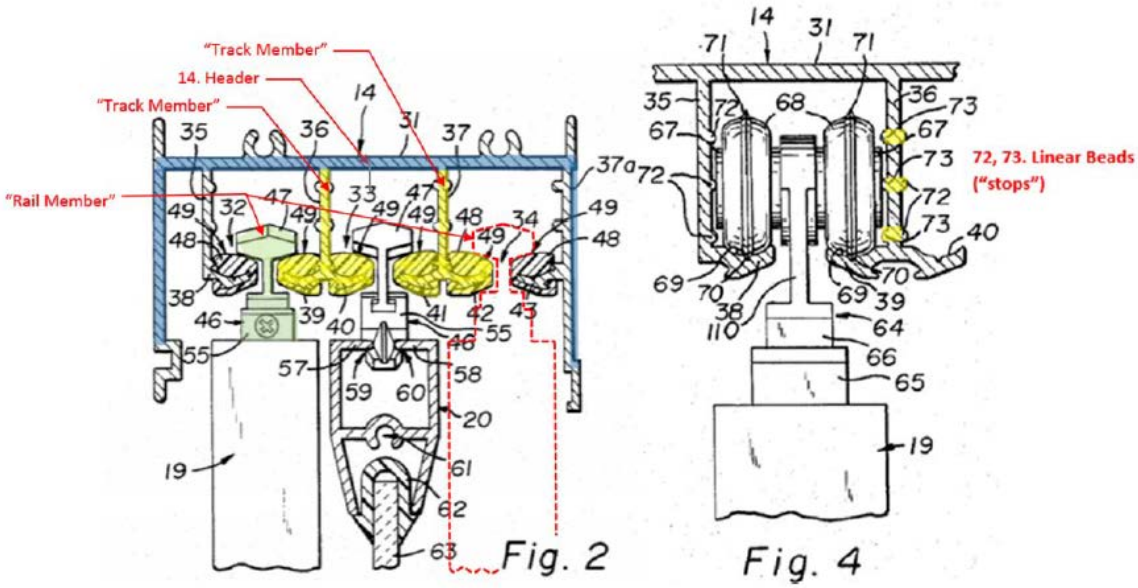

Pet. Supp. Reply 10–11. We are unclear as how limiting the axial movement of rail members necessarily limits the movement of one rail member relative to two others, as we discern that that movement of each rail member is controlled independent of all the others.

At the supplemental oral argument, Petitioner asserted that the direction in which movement was limited was on a horizontal axis perpendicular to the direction of travel of the rail members, i.e., in that a middle rail member is always, by definition, between two other rail members. Supp. Tr. 14:19–21:3. We are unpersuaded by these assertions for several reasons. First and foremost, stops have nothing to do with limiting movement of the rail members in the direction indicated by Petitioner; it is the presence of supporting webs 36, 37 (i.e., track members) and the other outer rail members themselves that accomplish that task. Second, Petitioner's assertions, in every other respect with respect to "stops," properly concerns limiting movement of rail members in the only direction that they are physically able to move, which is generally in an axial direction. Third, Petitioner's assertions are inconsistent with the '944 patent,

which discloses that "[s]tops 50 also guide middle rail [22] in the direction of movement of front rail 20 or rear rail 24." Ex. 1001, 7:29–30.

In the alternative, Petitioner asserts the following

> a POSITA would have been motivated to combine Van Weelden with Sterling. *See supra* Sect. IX. A–B and D. Sterling discloses and provides instructions with respect to 4 interlock bumpers positioned on the rails (which are joined to the header tracks) of the outside and inside panels and 2 on the rail of middle panel, accordingly. *See* Ex. 1009, p. 8 . . . .

Pet. 46. The relevant portion of Section IX. A–B, D reads as follows: "implementing Sterling's interlocking bumpers on the panels and/or rails based on Van Weelden's track assembly would have been nothing more than another combination of prior art elements according to known methods to achieve predictable results." Pet. 28.

In our Decision on Institution, we stated the following:

> The assertion is deficient, because the relevant limitation of dependent claim 4 reads "a plurality of stops coupled to said first and second ***track members***." Emphasis added. Petitioners above discussions, however, are limited to placing the interlock bumpers of Sterling on the ***panels*** and ***rails*** of Van Weelden. We acknowledge that Petitioner's above-analysis does mention that the rails are joined to the header tracks, insinuating that perhaps the interlock bumpers of Sterling can also be placed on the header tracks. Such a supposition does not aid Petitioner, however, as independent claim 1, from which claim 4 depends, recites each of "panels," "header tracks," "rail members," and "track members" as separate and distinct elements. *See Texas Instr. Inc. v. United States Int'l Trade Comm'n*, 988 F.2d 1165, 1171 (Fed. Cir. 1993) (claim language cannot be mere surplusage. An express limitation cannot be read out of the claim); *Unique Concepts, Inc. v. Brown*, 939 F.2d 1558, 1563 (Fed. Cir. 1991) (two distinct claim elements should each be given full effect). Accordingly, placement of the interlock bumpers of Sterling on Van Weelden's ***header tracks*** still does

> not meet "a plurality of stops coupled to said first and second ***track members***" (emphasis added), as recited in dependent claim 4.

Dec. 15–16. Patent Owner's assertions largely mirror this language. PO Supp. Resp. 12.

Petitioner replies as follows:

> As a backup position, the Petition asserted that a POSITA would recognize Sterling's interlock bumpers, which limit lateral movement of rails and doors, as a suitable replacement for Van Weelden's linear beads 72 and 73 to limit lateral movement of middle rail member to between other rail members. Petition, p.45–48; Ex. 1003, ¶¶ 57–61, 153–154; Ex. 1034, ¶ 25. Interlock bumpers ("stops"/"protrusions") can be on the track elements (like Van Weelden's linear beads) and/or panels (like Sterling's interlock bumpers, and the '944 Patent's Claims 15, 23, and 24). Ex. 1034, ¶¶ 25-26. With no additional description in the specification of the '944 Patent, the interlocking feature in Claims 6 and 15 is necessarily a function of the stops, contrary to PO's argument. FR, p.11.

Pet. Supp. Reply 11. Although Petitioner now uses the term "lateral" instead of "axial," it, nevertheless, suffers from the same deficiency as set forth above with respect to linear beads 72, 73 of Van Weelden. Certainly we agree that Sterling's interlock bumpers can limit lateral movement of rails and doors, and that they could serve the same function when replacing Van Weelden's linear beads 72, 73. The disconnect, however, is that in order to "limit movement of said third rail member to between said first rail member and second rail member," as claimed, Sterling's interlock bumpers must be placed at specific positions along the axial length of Van Weelden's supporting webs 35, 36, 37, 37a. Petitioner has not provided any such analysis about such positions.

We are unpersuaded that Petitioner has met its burden of showing, by a preponderance of the evidence, that dependent claim 4 is obvious over Van Weelden in view of Sterling.

b. Dependent Claims 6 and 14-16

Dependent claim 6 recites "wherein stops positioned at the ends of said first and second track members interlock said first and second rail members with said third rail member." Petitioner asserts the following:

> *See supra* Sect[.] X. C. b). Moreover, a POSITA would have understood that Sterling's 4 interlock bumpers positioned on the rails' ends of the outside and inside panels to interlock with the 2 interlock bumpers of the middle panel. Ex. 1003, ¶ [0162]. *See, e.g.*, Ex. 1009, p. 8; Step 8 FIG, partially reproduced and annotated above. Thus, claim 6 is obvious in view of Van Weelden and Sterling under Ground 3.

Pet. 52.[18] Patent Owner responds by referring to its assertions concerning dependent claim 4. PO Supp. Resp. 12. Petitioner replies as follows:

> Claims 6 and 15 similarly describe a relationship between a stop/protrusion and track members, like Claim 4. Institution, p. 16. Claim 6 requires that "stops positioned at ends of track members interlock with a third track member," which tracks the language of Claim 14, which the Board found likely to be obvious. *Id.*, p. 22. "Interlock" means "to connect two things together." Ex. 1008, p. 3. This limitation is purely functional, and can be achieved by any of the stops/protrusions in Van Weelden, Sterling, and Comeau. *See supra*, §II(A). Evidence that a POSITA would find this obvious can be found, for example, in Jang, which describes stoppers 12 as capable of performing this precise function. Ex. 1012, ¶ 0015; Ex. 1034, ¶¶ 28. Claim 15 includes the same functional "interlocking"

[18] Sect. X. C. b) refers to the Petition's analysis of dependent claim 4 with respect to Van Weelden and Sterling. Pet. 46–47.

> limitation. Thus, Claims 6 and 15 are obvious in view of Van Weelden and/or Sterling. Ex. 1034, ¶¶ 29–31.

Pet. Supp. Reply 12. As noted in our Decision on Institution, Petitioner's analysis is flawed because it is unclear where Sterling's interlock bumpers are placed on Van Weelden's structure. At best, the Petition places Sterling's interlock bumpers on Van Weelden's rails and panels, but the claim requires that they be "positioned at the ends of said first and second track members" of Van Weelden. Moreover, even if, in view of Petitioner's assertion with respect to claim 4, Sterling's interlock bumpers replace linear beads 72, 73 of Van Weelden, Petitioner has not shown sufficiently where they would be placed on Van Weelden's supporting webs 35, 36, 37, 37a so as to "interlock said first and second rail members with said third rail member," as claimed.

Dependent claims 14–16 each recite language similar to the above limitation of dependent claim 6. For this ground, the Petition refers back to analysis of dependent claims 4 and 6. Pet. 64–66. Our analysis is in the same and need not be repeated.

We are unpersuaded that Petitioner has met its burden of showing, by a preponderance of the evidence, that dependent claims 6 and 14–16 are obvious over Van Weelden in view of Sterling.

c. Dependent Claims 23 and 24

Dependent claims 23 and 24 each recite language similar to the above limitations of dependent claims 4 and 6. For this ground, Petition refers back to the analysis of dependent claims 4 and 6. Pet. 69. Our analysis is in the same and need not be repeated.

We are unpersuaded that Petitioner has met its burden of showing, by a preponderance of the evidence, that dependent claims 23 and 24 are obvious over Van Weelden in view of Sterling.

d. Conclusion

We are unpersuaded that Petitioner has met its burden of showing, by a preponderance of the evidence, that dependent claims 4, 6, 14–16, 23, and 24 are obvious over Van Weelden in view of Sterling.

5. Analysis of Dependent Claim 10

Petitioner asserts that dependent claim 10 is obvious over Van Weelden and Sterling. Pet. 11–14, 54–56. Dependent claim 10 recites "wherein said first and second track members have a C shape cross section." Petitioner first asserts that "Van Weelden discloses first and second track members having a J-shape cross section. *See* Ex. 1011, Fig. 2. It would have been obvious to a POSITA to replace Van Weelden's first and second track members' described J-shape with a C-shape or H-shape, for example, to include an anti-jump function. Ex. 1003, ¶ [0171]." Pet. 55. This constitutes the entirety of Petitioner's analysis concerning this assertion.

In our Decision on Institution, we stated the following:

> The relevant portion of paragraph 171 of the Poenariu Declaration does no more than mirror the above language. We are unpersuaded the above analysis is sufficient, as Petitioner does not explain, and we are unable to ascertain independently, what constitutes an "anti-jump function," and how such an "anti-jump function" is aided by a C-shape or H-shape, as opposed to a J-shape.

Petitioner then asserts the following:

> A POSITA would be motivated to combine Van Weelden and Sterling for the reasons provided in Sect. IX. A–B, D. *To the extent the Board finds*

> *that Van Weelden on its own does not anticipate claim 10*, Sterling shows first and said second track members having a C-shape cross section. (See Ex. 1009, p. 7 partial annotated FIG. reproduced below.)

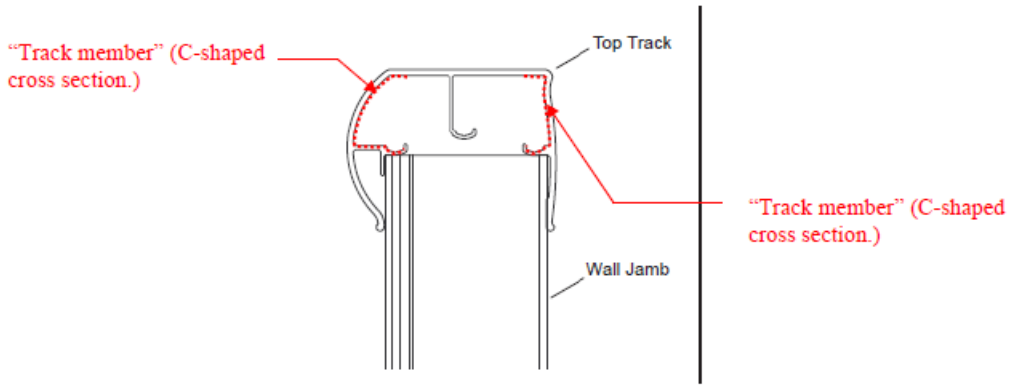

> Pet. 55. The relevant portion of Sections IX. A–B, D, however, only involves "implementing Sterling's interlocking bumpers on the panels and/or rails based on Van Weelden's track assembly . . . ," and makes no mention of shape substitution. Pet. 28. Accordingly, Petitioner has not provided an adequate rationale to modify the J-shape track members of Van Weelden in view of the C-shape track members of Sterling.

Dec. 17–18. Patent Owner's assertions largely mirror this language. PO Supp. Resp. 13–14; *see also* PO Obs. 6 (citing Ex. 163:10–165:6) (asserting that Mr. Dowd described the track members of Van Weelden as having L and T shapes).

In reply, Petitioner asserts that "[t]racks and track members having a C-shaped cross section were well known in the art and are thus obvious variants on Van Weelden," which has a J-shaped cross section. Pet. Supp. Reply 14; *see also* Pet. Obs. 8–9 (citing Ex. 2006, 163:24–165:2, 188:24-189:4, 209:16-210:7, 210:21-211:2, 230:16-231:17) (Mr. Dowd asserts the track members of Van Weelden have a variety of shapes.). In support, Petitioner further cites Collins, which discloses a "track groove being

generally C-shaped in cross section to provide a slide-retaining channel having a restricted opening," and asserts that Collin's C-shaped cross section is almost identical to that of Sterling. Pet. Supp. Reply 14 (citing Ex. 1039 3:1–5, 5:15–18, Fig. 3). As an initial matter, we note that this is a new argument, as the Petition's rationale for modification focused solely on the "anti-jump" function. Pet. 55.

Even when we consider the new argument, however, we are unclear as to how "a slide retaining channel having a restricted opening" is relevant for the hexagon-shaped glide 47 of Van Weelden. The same is true even more for the "nested interlocked rail" rationale based on Fler and the "keep a middle panel from reaching the ends of the track" rationale based on Etesam.[19] Pet Supp. Reply 14 (citing Ex. 1034 ¶¶ 27, 33).

Petitioner does provide some explanation, for the first time, concerning the purported "anti-jump function," citing Watkins in support. Pet. Supp. Reply 14 (citing Ex. 1034 ¶ 34; Ex. 1037, 3:44–46, 5:8–14, Fig. 13). The problem is that Watkins' purportedly "anti-jump function" is about "keeping the rollers engaged within," while the relevant embodiment of Van Weelden concerns glides 47, and not rollers.

We are unpersuaded that Petitioner has met its burden of showing, by a preponderance of the evidence, that dependent claim 10 is obvious over Van Weelden in view of Sterling.

6. Overall Conclusion for Ground

We are persuaded that Petitioner has met its burden of showing, by a preponderance of the evidence, that claims 1–3, 5, 7–9, 11, and 19–21 are

[19] Petitioner refers to Exhibit 1036 by what it understands to be the inventor's last name of "Mehran," however, it is actually "Etesam."

obvious in view of Van Weelden and Sterling. We are unpersuaded that Petitioner has met its burden of showing, by a preponderance of the evidence, that claims 4, 6, 10, 14–16, 23, and 24 are obvious in view of Van Weelden and Sterling.[20] As we have found above that claims 12, 13, 17, 18, 22, 25, and 26 are anticipated by Van Weelden, we see no need to further analyze these claims on this ground.

F. Claims 12–18 and 22–26 as Obvious Over Van Weelden, Sterling, and Jang

Petitioner challenges claims 12–18 and 22–26 of the ’944 patent as obvious over Van Weelden, Sterling, and Jang. Pet. 11–15, 26–30, 57–66, 68–70.

1. Jang (Ex. 1012)

Jang relates generally to “a sliding door capable of opening and closing an entrance, such as an entrance to a building or an entrance to a bathroom, and of partitioning the bathing area of the bathroom.” Ex. 1012 ¶ 1. Figure 3 of Jang is a perspective view of sliding means 5 of a sliding door, and is set forth below.

[20] We note that claims 14, 16, 23, and 24 are determined to be unpatentable on the ground based on Van Weelden, Sterling, and Jang.

Fig 3

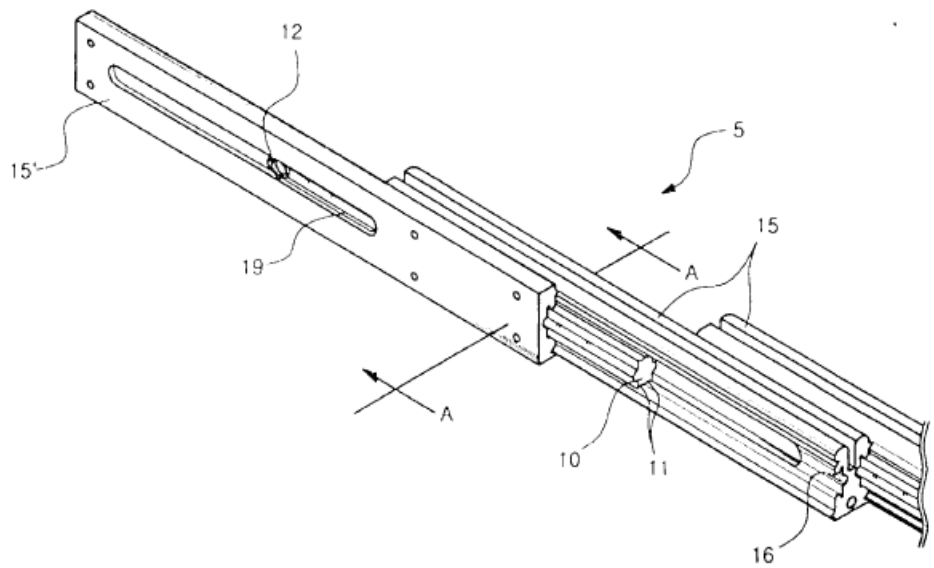

Ex. 1012, Fig. 3. As shown above, sliding means 5 includes fixed bracket 15' and sliding bars 15, each formed with guide grooves 16. Ex. 1012 ¶ 15. Stopper guide slots 19 are longitudinally formed along each of fixed bracket 15' and sliding bars 15. Ex. 1012 ¶ 15. Projecting stoppers 12 are formed on each end of slider 10, and are inserted into stopper guide slots 19. Ex. 1012 ¶ 15.

2. Analysis of Claims 12, 13, 17, 18, 22, 25, and 26

Petitioner asserts that claims 12, 13, 17, 18, 22, 25, and 26 are obvious over Van Weelden, Sterling, and Jang. Pet. 11–15, 26–30, 57–63, 66, 68–70. For the most part, Petitioner's assertions track those set forth in the anticipation ground based on Van Weelden for the same claims. As set forth above, for these claims, because Petitioner does not identify any deficiency of Van Weelden that is purportedly remedied by Sterling, we treat this ground as limited, in practice, to Van Weelden in view of Jang.

Essentially, for these claims, Petitioner sets forth a "backup" position, with Jang, for the following limitation of independent claim 12: "wherein said first and second track members are recessed in said first and second door panels respectively." As we have already determined above that these claims are anticipated by Van Weelden alone, however, we see no need to further analyze these claims on this ground.

3. Analysis of Dependent Claims 14, 16, 23, and 24

Petitioner asserts that dependent claims 14, 16, 23, and 24 are obvious over Van Weelden, Sterling, and Jang. Pet. 11–15, 26–30, 63–64, 66, 69.

Dependent claim 14 recites "wherein said first and second rail members are interlocked to said third rail member by a plurality of stops mounted in said first and said second track members; and wherein movement of said first or second rail member guides movement of said third rail member." Petitioner asserts the following:

> Further, with respect to Ground 5, a POSITA would have known to combine Van Weelden and Jang for the reasons provided in Sect. IX, A–B, F. Jang discloses that "the sliding bars 15' and 15 are formed with the stopper guide slots 19, the stopper guide slot 19 being longitudinally formed along each of the sliding bars 15' and 15. The projecting stopper 12 is inserted into the stopper guide slot 19. Two stoppers 12 are formed on both ends of each of the sliders 10, respectively, while the stoppers 12 projecting in opposite directions." Ex. 1012, ¶ [0015], FIGS. 2–3.

Pet. 64. As best as we are able to ascertain, stopper guide slots 19 of Jang would be placed in each of supporting webs 36, 37 of Van Weelden, and stoppers 12 of Jang would be placed on glides 47 of supporting doors 19, 20 of Van Weelden. Accordingly, stoppers 12 (Jang) on outer supporting doors 19 (Van Weelden) would interfere with stoppers 12 (Jang) on inner supporting door 20 (Van Weelden) in stopper guide slots 19 (Jang) of

supporting webs 36, 37 (Van Weelden), thus, corresponding to the aforementioned claim limitations. Petitioner asserts that a similar analysis should also be applied to dependent claim 23. Pet. 69.

Petitioner also applies a similar analysis for dependent claim 16, which reads "wherein said first and said second door panels are interlocked to said third door panel by a plurality of overlapping protrusions mounted to said first, said second and said third door panel." Pet. 65–66. Petitioner asserts that a similar analysis should further be applied to dependent claim 24. Pet. 69.

Patent Owner asserts that Van Weelden and Jang cannot be combined in the manner set forth by Petitioner. PO Resp. 18–20. Specifically, Patent Owner asserts that Van Weelden discloses adjustment apparatus 46 for vertically adjusting the height of upper, movable adjustment apparatus 56 relative to lower, fixed adjustment apparatus 55. PO Resp. 18. Patent Owner further asserts that Jang does not mention door adjustability, and, indeed, that the close fitting slide arrangement of the components in Jang preclude vertical adjustability. PO Resp. 18–19. Accordingly, Patent Owner asserts the following:

> The Board suggested reconstructing Van Weelden by putting guide slots 19 of Jang into webs 36 and 37 of Van Weelden, and then putting stoppers 12 of Jang on outer doors 19 of Van Weelden. However, doing so would inherently preclude glides 47 and 92 of Van Weeldon from sliding independently on and with respect to bearing inserts 48 with any vertical motion, and thereby eliminate the adjustability feature for which the Van Weelden device was created. In effect, the purely linear motion of stoppers 12 within slots 19 would preclude the necessary "arcuate" or curvelinear motion of the door into the vertical elevation which is provided by elements 47 and 92. Stated differently, the proposed modification would change a

> fundamental principle of operation of Van Weelden. Accordingly, the combination of those references would not be sufficient to render the claims prima facie obvious. *In re Ratti*, 270 F. 2d 810, 813 (CCPA 1959).

PO Resp. 19. Petitioner responds that (1) Patent Owner's assertions are based solely on attorney argument, and, thus, should be given little or no weight (Pet. Reply 18–19); (2) that "[a] person of ordinary skill is a person of ordinary creativity, not an automaton," who would have been able to solve the technical challenges of the proffered combination (Pet. Reply 18 (*citing KSR Int'l Co. v. Teleflex Inc.*, 550 U.S. 398, 421 (2007))); (3) that "[t]he obviousness test does not ask 'whether the references could be physically combined but whether the claimed inventions are rendered obvious by the teachings of the prior art as a whole" (Pet. Reply 18–19 (*citing In re Etter*, 756 F.2d 852, 859 (Fed. Cir. 1985) (en banc))); and (4) "[c]ontrary to PO's attorney argument that 'vertical play or such motion' is required for adjustment, Petitioner points out that this is not required by the adjustment apparatus 46 described in Van Weelden (since it is between the bottom of the rail members 47 and the top of the doors 19), nor do the claims include 'vertical play or such motion' between components 10 and 14 and 15" of Jang (Pet. Reply 19). And with regards to this last response, Petitioner elaborated further at oral argument, as follows:

> JUDGE KIM: I understand, but the argument the Patent Owner is making is, it's going to restrict the vertical movement.
>
> MR. KINCART: I see what you're saying. And perhaps, in one embodiment, but when we go to the broadest reasonable interpretation, if we had a stop that was precisely the same as the groove or the hole that it was in, but you could easily have a stop that allowed for play. You could easily have a stop in the elongated slot that Van Weelden actually addresses. Van Weelden knew about an elongated slot, it's in the background.

> And they said, part of the problem that we think we can do better here, is to not have the elongated slot, but they knew of it, so they could have used it, and you could have had a stop within that, any slot, and allowed for that type of play.

Tr. 20:19–21:4.

We agree with Petitioner for all the reasons set forth above. Most prominently, we are unclear as to why placing stopper guide slots 19 of Jang on each of supporting webs 36, 37 of Van Weelden, and stoppers 12 of Jang on glides 47 of supporting doors 19, 20 of Van Weelden, would have any adverse effect on vertically adjusting adjustment mechanism 46, as asserted by Patent Owner, where vertical movement of supporting doors 19, 20 relative to glides 47 is independent of movement of supporting webs 36, 37 relative to glides 47.

We are persuaded that Petitioner has met its burden of showing, by a preponderance of the evidence, that claims 14, 16, 23, and 24 are obvious over Van Weelden in view of Sterling and Jang.

4. Analysis of Dependent Claim 15

Petitioner asserts that dependent claim 15 is obvious over Van Weelden, Sterling, and Jang. Pet. 11–15, 26–30, 64–65.

In our Decision on Institution, we stated the following:

> Our analysis is similar to set forth above for dependent claims 14 and 16, except that dependent claim 15 recites "wherein said first and said second door panels are further interlocked to said third door panel by a plurality of stops ***mounted*** to said first and said second track members." Emphasis added. As analyzed above, we understand stoppers 12 (Jang) on glides 47 (Van Weelden) interfering in stopper guide slots 19 (Jang) of supporting webs 36, 37 (Van Weelden). We are unclear, however, how those same stoppers 12 (Jang) can be placed on supporting webs 36, 37 (Van Weelden) and achieve the same interference effect, as required to meet the

> aforementioned claim limitation, especially since stopper guide slots 19 (Jang), which stoppers 12 (Jang) are supposed to slide within, are already on supporting webs 36, 37 (Van Weelden).

Dec. 24–25.

Petitioner responds as follows:

> Claims 6 and 15 similarly describe a relationship between a stop/protrusion and track members, like Claim 4. Institution, p. 16. Claim 6 requires that "stops positioned at ends of track members interlock with a third track member," which tracks the language of Claim 14, which the Board found likely to be obvious. *Id.*, p. 22. "Interlock" means "to connect two things together." Ex. 1008, p.3. This limitation is purely functional, and can be achieved by any of the stops/protrusions in Van Weelden, Sterling, and Comeau. *See supra*, §II(A). Evidence that a POSITA would find this obvious can be found, for example, in Jang, which describes stoppers 12 as capable of performing this precise function. Ex. 1012, ¶ 0015; Ex. 1034, ¶¶ 28. Claim 15 includes the same functional "interlocking" limitation. Thus, Claims 6 and 15 are obvious in view of Van Weelden and/or Sterling. Ex. 1034, ¶¶ 29–31.

Pet. Supp. Reply 12. Petitioner then goes on to describe how Jang discloses this limitation. Pet. Supp. Reply 12–13 (citing Ex. 1003 ¶¶ 40–43; Ex. 1012 ¶¶ 14, 15, 25, 26, Fig. 3; Ex. 1034 ¶ 39). Petitioner's above response is misplaced, because it still does not explain *where* stoppers 12 of Jang are placed on supporting webs 36, 37 of Van Weelden. Without identifying such placement, we are unable to evaluate whether stoppers 12 of Jang, so placed on supporting webs 36, 37 of Van Weelden, results in "said first and said second door panels are further interlocked to said third door panel," as required.

We are unpersuaded that Petitioner has met its burden of showing, by a preponderance of the evidence, that dependent claim 15 is obvious over Van Weelden in view of Sterling and Jang.

5. Conclusion

We are persuaded that Petitioner has met its burden of showing, by a preponderance of the evidence, that dependent claims 14, 16, 23, and 24 are obvious in view of Van Weelden, Sterling, and Jang. We are unpersuaded that Petitioner has met its burden of showing, by a preponderance of the evidence, that dependent claim 15 obvious in view of Van Weelden, Sterling, and Jang. As we have found above that claims 12, 13, 17, 18, 22, 25, and 26 are anticipated by Van Weelden, we see no need to further analyze these claims on this ground.

G. Claims 1–11 and 19–21 as Obvious over Comeau and Sterling

Petitioner challenges claims 1–11 and 19–21 of the ’944 patent as obvious over Comeau and Sterling. Pet. 10–11, 26–57 and 66–68. Patent Owner responds. PO Supp. Resp. 3–15. Petitioner replies. Pet. Reply 1–15.

1. Comeau

Comeau relates to a multiple panel track system for a window covering assembly, which can be mounted within a window frame. Ex. 1010, 1:4–7. Figure 11 of Comeau is set forth below.

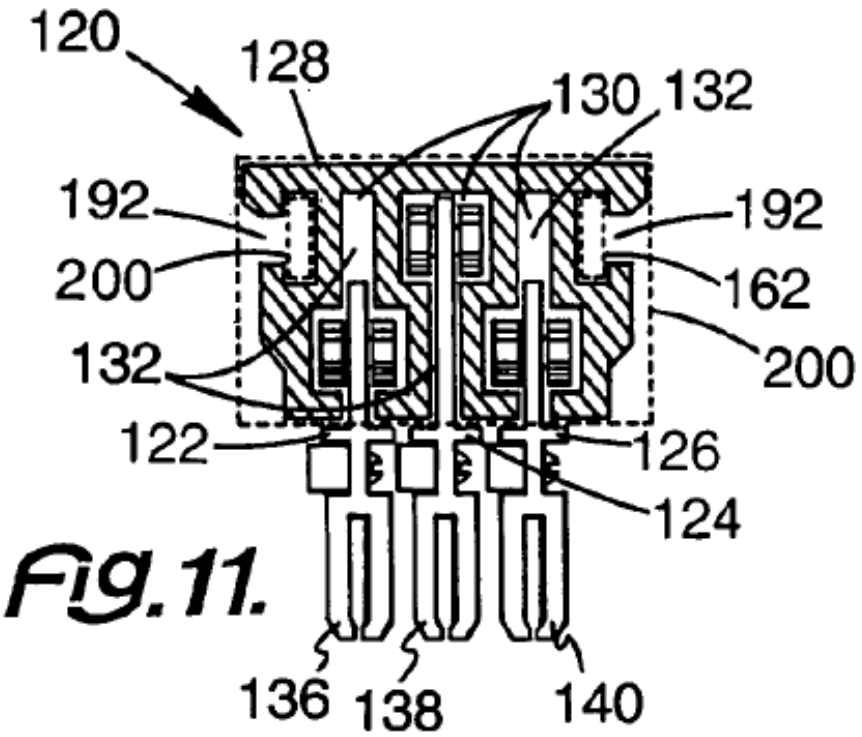

Figure 11 depicts an end, plan, partially cross-sectioned view of a multiple panel track system for a window covering assembly.

Track support 120 includes first carrier track 122, second carrier track 124, and third carrier track 126. Ex. 1010, 5:25–31. Each of first, second, and third carrier tracks 122, 124, 126 is positioned within receiver portion 130 and slotted portion 132 of track support 120. Ex. 1010, 6:37–40. Positioned on the bottom of and within each of first, second, and third carrier tracks 122, 124, 126 is respective first, second, and third panel holder 136, 138, 140. Ex. 1010, 6:54–57.

Figure 13 of Comeau is set forth below.

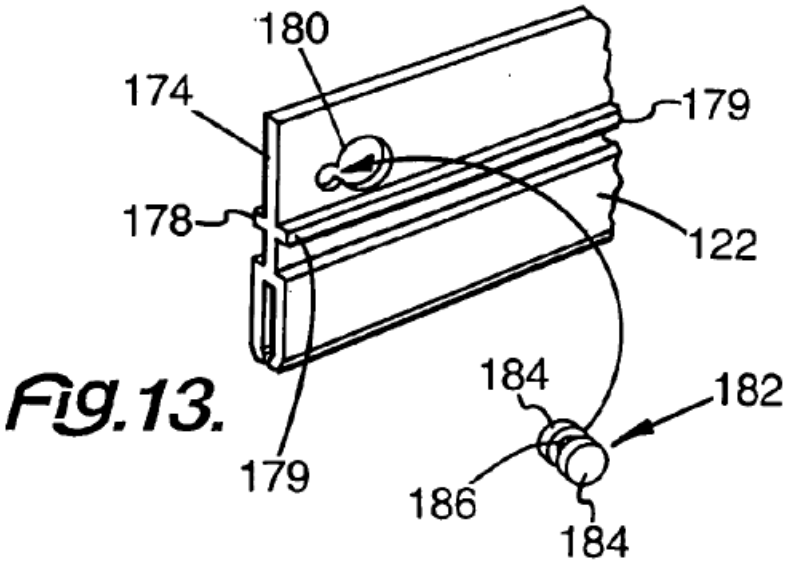

Figure 13 is a perspective view of carrier track 122.

Carrier track 122 includes wheel mount apertures 180, into which is inserted wheel unit 182. Ex. 1010, 7:25–32. Wheel unit 182 is placed within slotted portion 132 of track support 120. Ex. 1010, 7:35–36.

2. Analysis of Claims 1–3, 5, 7–9, 11 and 19–21

Petitioner asserts that claims 1–3, 5, 7–9, 11 and 19–21 are obvious in view of Comeau and Sterling. Pet. 10–11, 26–57 and 66–68 (citing Exs. 1003, 1009, 1010). For example, Petitioner provides the following copy of Figure 11 of Comeau, annotated to identify, among several items, first carrier track 122, third carrier track 126, and wheel unit 182.

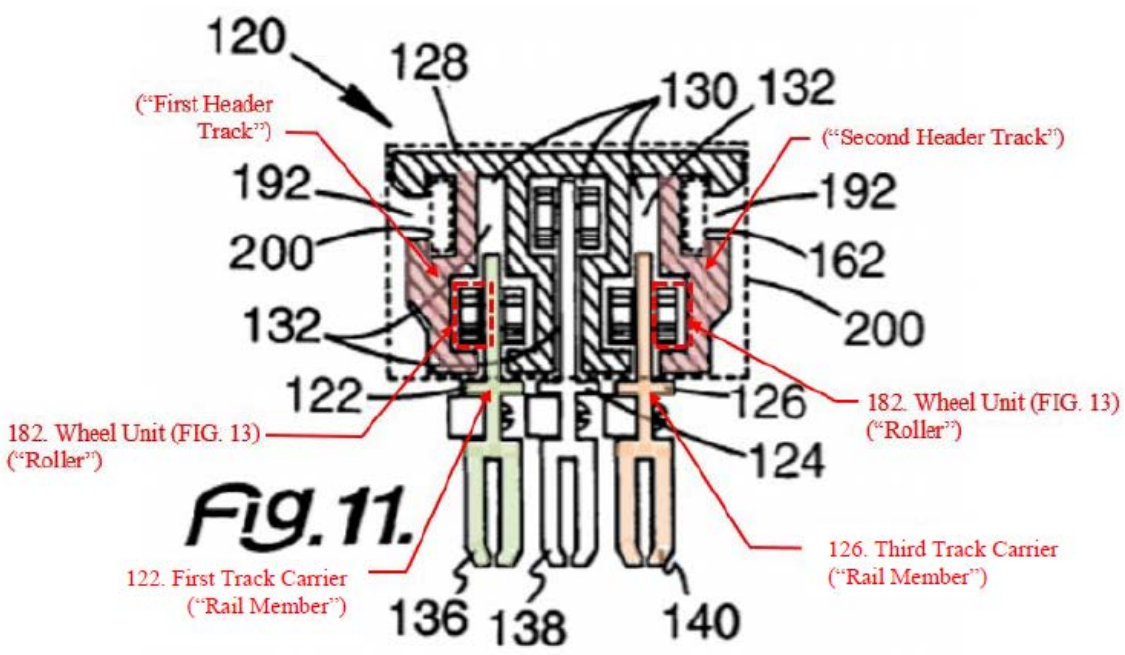

Figure 11 is a cross-sectional view of track support 120.

Pet. 34. Independent claim 1 recites "[a] slide assembly for three sliding panels adapted to couple to a header having first and second header tracks" and "first and second rail members adapted to slidingly couple to the first and second header tracks respectively." Petitioner asserts that panels hanging from panel holders 136, 138, 140 correspond to the recited "three sliding panels," that flat top portion 128 of track support 120 corresponds to the recited "header," that the portions of track support 120 colored in pink correspond to the recited "first and second header tracks," and that carrier tracks 122, 126 correspond to the recited "first and second rail members." Pet. 32–34.

Petitioner then provides another copy of Figure 11 of Comeau, annotated to identify, among several items, first carrier track 122, third carrier track 126, and wheel unit 182.

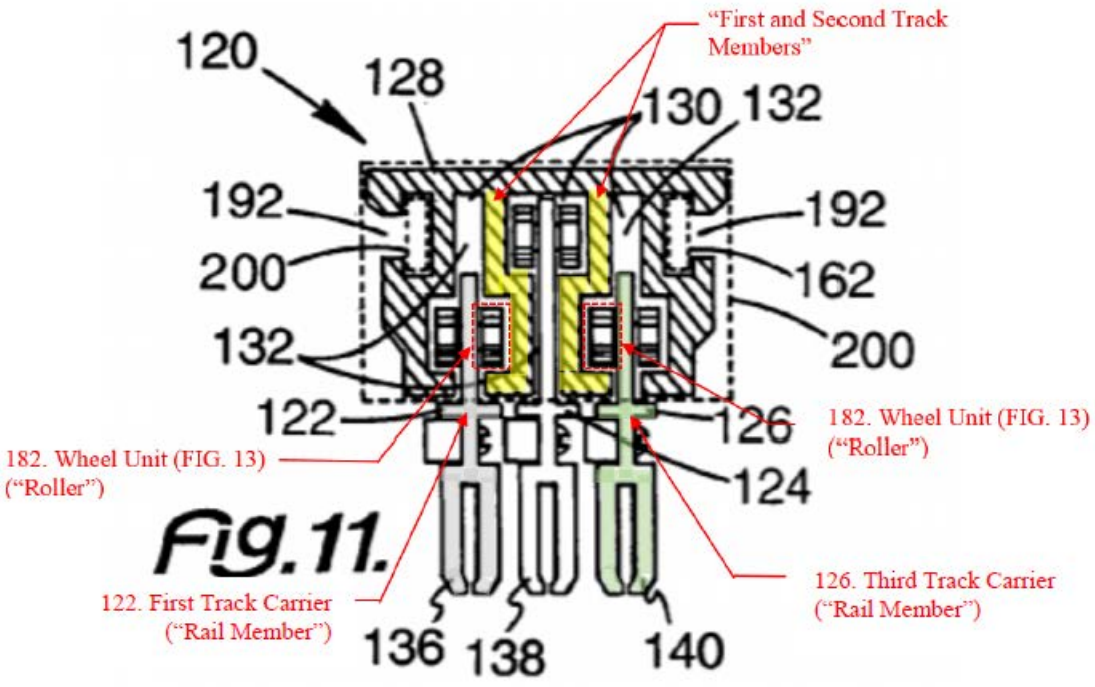

Figure 11 is a cross-sectional view of track support 120.

Pet. 36. Independent claim 1 then recites "first and second track members adapted to couple to said first and second rail members respectively" and "a third rail member adapted to slidingly couple to said first and second track members; wherein said third rail member is supported by said first and second track members." Petitioner asserts that the portions of track support 120 colored in yellow correspond to the recited "first and second track members," and that second carrier track 124 corresponds to the recited "third rail member." Pet. 35–40.

Independent claim 1 further recites "wherein said first and second track members remain aligned with the header when the alignment of said first or said second rail members is adjusted." For this limitation Petitioner asserts the following:

> A POSITA would understand "wherein said first and second track members remains aligned with the header when the alignment of said first or said second rail members is adjusted"

> to mean an adjustment to accommodate a particular set of circumstances or requirements can be made to each first or second rail members without changing the relative positions and orientations of the first and second track members in relation to the horizontal structural or finish piece over an opening (header). *See supra* Sect. VIII, 22. Comeau discloses, e.g., "[l]ocated at each end of the carrier tracks are wheel mount apertures 180 which comprises a smaller circular orifice in the rectangular spine 174 located close to the end of the carrier track with a larger circular orifice located more toward the center of the carrier intersecting the smaller orifice. Inserted into the wheel mount aperture 180 is wheel unit 182, which comprises two wheels 184 held in position by wheel axle shaft 186." Ex. 1010, 7:25–32. A POSITA would understand the smaller circular orifice in the wheel mount apertures 180 to allow for an alignment that secures each of the wheel unit 182 thereto, without changing the alignment of the track members with respect to the header. Ex. 1003, ¶ [0143].

Pet. 40.[21] Petitioner further asserts the following:

> *To the extent the Board finds that Comeau does not disclose 1[e] "said first and second track members remain aligned with the header when the alignment of said first or second rail members is adjusted,"* it would be obvious to a POSITA in view of Comeau and Sterling. Ex. 1003, ¶ [0144]. A POSITA would have known to combine Comeau and Sterling. *See supra* Sect. IX. A–C. Sterling discloses and provides instructions with respect of the elongated angled slots in the roller bracket for adjustment of the panels. *See supra* Sect. VI, C.; Ex. 1009, p. 9. Roller can be adjusted with respect to the elongated angled slot in the same manner described in the [']944 Patent. Thus, if not obvious in view of Comeau on its own, the limitation "wherein said first and second track members remain aligned with the header when the alignment of said first or said

[21] Patent Owner asserts that "the Petition did not make any argument that any of the claims of the '944 patent should be unpatentable in light of the Comeau reference by itself." PO Supp. Resp. 2. As seen here, however, the Petition asserts exactly that for independent claim 1.

> second rail members is adjusted" is obvious in view of Comeau and Sterling.

Pet. 41. Petitioner asserts that the language of independent claim 19 largely tracks independent claim 1. Pet. 66–67. For dependent claims 2–3, 5, 7–9, 11, 20, and 21, Petitioner performs a similar mapping of claim limitations to Comeau and Sterling. Pet. 10–11, 42–57, 67 and 68.

Patent Owner asserts that Comeau does not disclose "first and second track members adapted to couple to said first and second rail members respectively," because the portions of track support 120 colored in yellow can move relative to first and third carrier tracks 122, 126, indicating that they are not "coupled." PO Supp. Resp. 5–6 (citing Ex. 1010, 4:9–17, 5:15–37, 7:25–34, Figs. 1–3, 11, 13). Patent Owner's assertion is misplaced, as it relies on an incorrect construction of "couple." As set forth above, we construe "couple" as "join together," which does not require that two parts so joined "cannot move relative to each other."

Patent Owner asserts further that neither Comeau nor Sterling discloses "wherein said first and second track members remain aligned with the header when the alignment of said first or said second rail members is adjusted." PO Supp. Resp. 6–8. For Sterling in particular, Patent Owner asserts that "[t]here is no instruction at all about maintaining alignment of any component with the header while doing this, much less any instruction about the track members doing so. Instead, it is panel to panel or wall jamb alignment that the Sterling reference discusses." PO Supp. Resp. 8. Petitioner responds as follows:

> Comeau's rails are adjustable, as shown in Figs. 6–8. Ex. 1034, ¶ 51. Sterling's rails are adjustable, as shown on page 9. In each case, during adjustment of rail members, the relative positions and orientations of track members does not change in relation to

> the header. Ex. 1034, ¶¶ 46–53. In both Comeau and Sterling, the tracks are integrated into the header and therefore have a fixed alignment, regardless of the adjustment of rails.

Pet. Supp. Reply 3.

We agree with Petitioner. Beginning with Comeau alone, the purported track members (i.e., the portions of track support 120 colored in yellow) are attached to the purported header (i.e., flat top portion 128 of track support 120). They are, therefore, always aligned, regardless of any adjustments made to the alignment of the purported first and second rail members (i.e., first and third carrier tracks 122, 126). We find further that this would be true even if wheel mounting apertures 180 of Comeau were modified to look like the alignment slots of Sterling. To that end, it is inapposite that Sterling does not disclose anything concerning header and track member alignment, as it is Comeau which is relied on for those limitations.[22]

Patent Owner asserts that "the Sterling reference makes no mention of such rail members coupled or joined together to the track members (and the Petition does not allege that it does)." PO Supp. Resp. 7. We agree, but the assertion is misplaced as the Petition relies on Comeau for the relevant limitations.

We are persuaded that Petitioner has met its burden of showing, by a preponderance of the evidence, that claims 1–3, 5, 7–9, 11, and 19–21 are obvious in view of Comeau and Sterling.

---

[22] Despite our Briefing Order, Patent Owner makes the same assertions concerning the combination of Van Weelden and Sterling in its Further Response. PO Supp. Rep. 6–7. Except for replacing Comeau with Van Weelden, our analysis is the same as set forth in this paragraph.

3. Analysis of Dependent Claim 4

Dependent claim 4 recites "a plurality of stops coupled to said first and second track members; wherein said stops are positioned to limit movement of said third rail member to between said first rail member and second rail member." Petitioner identifies catch assemblies 150 coupled to first, second, and third carrier tracks 122, 124, 126 as corresponding to the aforementioned components. Pet. 46. Figure 6 of Comeau is set forth below.

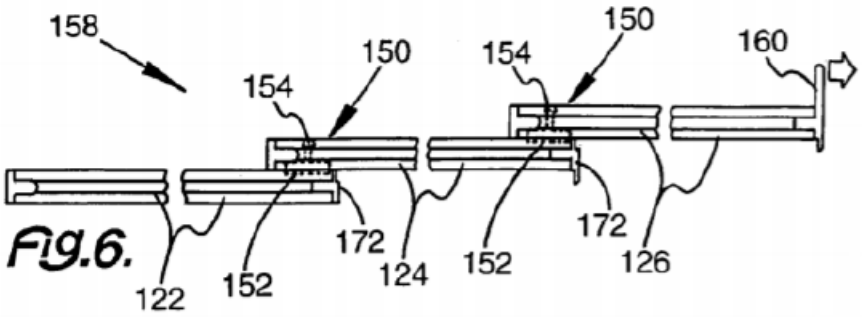

Figure 6 is a bottom plan view of track assembly 158 fully deployed.

Petitioner then asserts the following.

> Comeau anticipates (Ex. 1003, ¶ [0155]) "wherein said stops are positioned to limit movement of said third rail member to between said first rail member and said second rail member" describing:
>
> > [w]hen the track assembly 158 is completely deployed, the catch assembly 150 located on the second carrier track 124 buts up against catch cap 172, which is positioned at the right end of first carrier track 122. In the same manner, the catch assembly 150 located on third carrier 126 protrudes out and butts against the catch cap 172 which is positioned on the right end of second carrier track 124. Positioned at the right end of third carrier track 126 is pull cap 160.

Pet. 47–48 (citing Ex. 1010, 5:65–6:5).

Patent Owner asserts that catch assemblies 150 are on the purported first and second *rail* members (i.e., first and third carrier tracks 122, 126 of Comeau), and not on the first and second *track* members (i.e., the portions of track support 120 colored in yellow of Comeau), as required. PO Supp. Resp. 10–11; *see also* PO Obs. 2–3 (citing Ex. 2006, 81:4–10, 83:15–18, 94:8–13, 102:21–103:3) (concerning claim 4). Petitioner responds by now identifying pull caps 160, catch caps 172, curtain caps 176, and end caps 200 as corresponding to the recited stops. Pet. Supp. Resp. 8–9 (citing Ex. 1003 ¶¶ 155–156; Ex. 1010, 5:28–31, 6:49–51; Figs. 4, 11; Ex. 1034 ¶ 24); *see also* Pet. Obs. 3–5 (citing Ex. 2006, 79:9–24, 80:12–19, 83:2–18, 94:8–13, 95:9–18, 99:11–20, 103:9–14, 212:1–213:7, 229:25–230:14) (concerning claim 4).

For pull caps 160, catch caps 172, and curtain caps 176, we agree with Patent Owner that Petitioner has not explained adequately how these components are "coupled to" the purported first and second track members (i.e., the portions of track support 120 colored in yellow), when Comeau discloses them as being on the purported first and second rail members (i.e., first and third carrier tracks 122, 126). For end cap 200, this an improper new argument made for the first time in Petitioner's Supplemental Reply.[23,24]

---

[23] Even when considered, however, end cap 200 appears to be slotted in openings 192 of the purported header tracks (the portions of track support 120 colored in pink), and Petitioner does not explain adequately how they are "coupled to" the purported first and second track members, as required.

[24] Insofar as Petitioner's assertions concerning "movement" made with respect to Van Weelden and Sterling (Pet. Supp. Reply 10–11) are also applicable to this ground, they are unpersuasive for the same reasons as set

We are not persuaded that Petitioner has met its burden of showing, by a preponderance of the evidence, that dependent claim 4 is obvious in view of Comeau and Sterling.

4. Analysis of Dependent Claim 6

Dependent claim 6 recites "wherein stops positioned at the ends of said first and second track members interlock said first and second rail members with said third rail member." Petitioner asserts the following:

> *See supra* Sections X. C. a) & c) with respect to Ground 1. Moreover, a POSITA would have understood that Sterling's 4 interlock bumpers positioned on the rails' ends of the outside and inside panels to interlock with the 2 interlock bumpers of the middle panel. Ex. 1003, ¶ [0161]. *See*, e.g., Ex. 1009, p. 8; Step 8 FIG, partially reproduced and annotated below:

---

forth above.

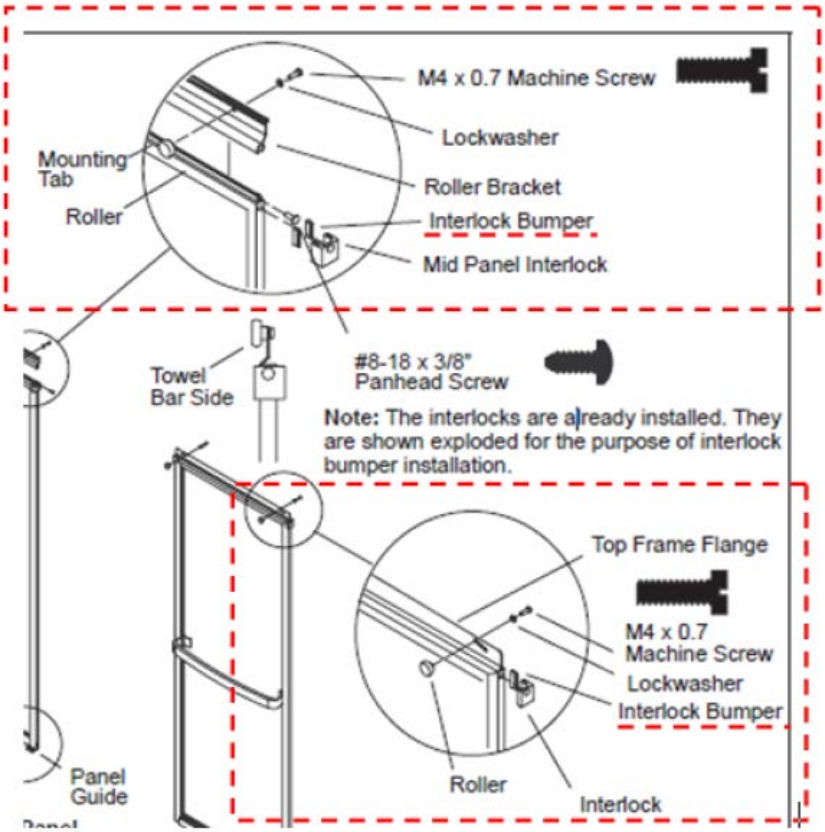

Above is an exploded schematic view of an interlock bumper installation.

Pet. 51.[25] Patent Owner responds by referring to its assertions concerning dependent claim 4. PO Supp. Resp. 12; *see also* PO Obs. 3–4 (citing Ex. 2006, 115:6–9, 118:1–24) (concerning claims 6 and 15). Petitioner replies as follows:

> Claims 6 and 15 similarly describe a relationship between a stop/protrusion and track members, like Claim 4. Institution, p. 16. Claim 6 requires that "stops positioned at ends of track members interlock with a third track member," which tracks the language of Claim 14, which the Board found likely to be obvious. *Id.*, p. 22. "Interlock" means "to connect two things together." Ex. 1008, p. 3. This limitation is purely functional,

[25] Sect. X. C. a) & c) refers to the Petition's analysis of dependent claim 4 with respect to Comeau. Pet. 46–48.

> and can be achieved by any of the stops/protrusions in Van Weelden, Sterling, and Comeau. *See supra*, §II(A). Evidence that a POSITA would find this obvious can be found, for example, in Jang, which describes stoppers 12 as capable of performing this precise function. Ex. 1012, ¶ 0015; Ex. 1034, ¶¶ 28. Claim 15 includes the same functional "interlocking" limitation. Thus, Claims 6 and 15 are obvious in view of Van Weelden and/or Sterling. Ex. 1034, ¶¶ 29–31.

Pet. Supp. Reply 12; *see also* Pet. Obs. 5–6 (citing Ex. 2006, 115:6–117:25, 118:25–120:11, 176:18–179:4, 215:10–217:11, 229:25–230:14, 230:25–231:17) (concerning claims 6 and 15).

Petitioner's analysis is flawed because it is unclear where Sterling's interlock bumpers are placed on Comeau's structure. At best, the Petition places Sterling's interlock bumpers on Comeau's rails (i.e., first, second, and third track carriers 122, 124, 126) and panels, but the claim requires that they be "positioned at the ends of said first and second track members" of Comeau. Moreover, even if Sterling's interlock bumpers could somehow be placed on Comeau's track members (i.e., the portions of track support 120 of colored in yellow), Petitioner has not shown sufficiently how where they would be placed on so as to "interlock said first and second rail members with said third rail member," as claimed.

We are not persuaded that Petitioner has met its burden of showing, by a preponderance of the evidence, that dependent claim 6 is obvious in view of Comeau and Sterling.

5. Analysis of Dependent Claim 10

Dependent claim 10 recites "wherein said first and second track members have a C shape cross section." The following constitutes the entirety of the Petition's analysis of this claim and ground:

> As shown below in annotated Fig. 11, Comeau discloses first and second track members having a C shape cross section. Ex. 1003, ¶ [0170].

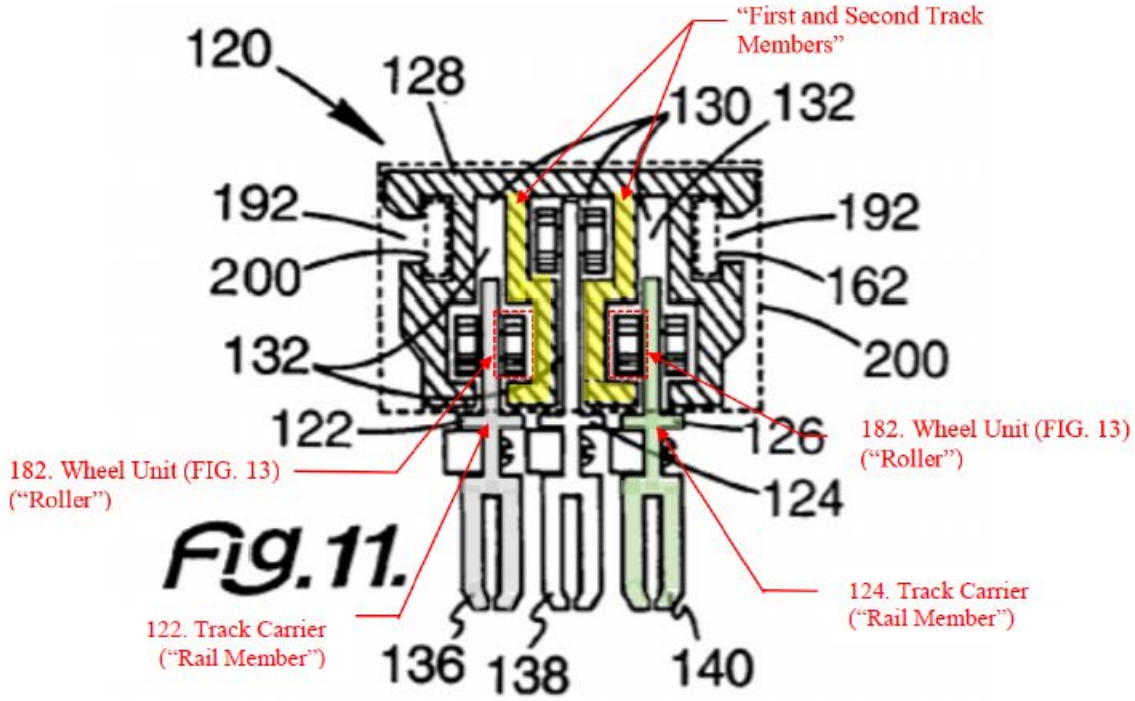

Pet. 55. Patent Owner responds that the yellow highlighted portion are two vertically stacked and reversed L portions. PO Supp. Resp. 13. Petitioner replies as follows:

> Moreover, Comeau describes C-shaped cross section openings 192 in which to position the end caps 200. 6:48–51; Fig. 11 (shown below); Ex. 1034, ¶ 35. PO includes a creative, but unpersuasive argument that the tracks of Comeau are two "vertically stacked and reversed L portions." FR, p.13. PO's contention fails because a track necessarily needs to include a bottom lateral portion for a roller to rest upon. The disclosed top portion contains the roller. PO's interpretation would remove these functional portions of the track. In addition, a BRI would include a C shape (see highlights below):

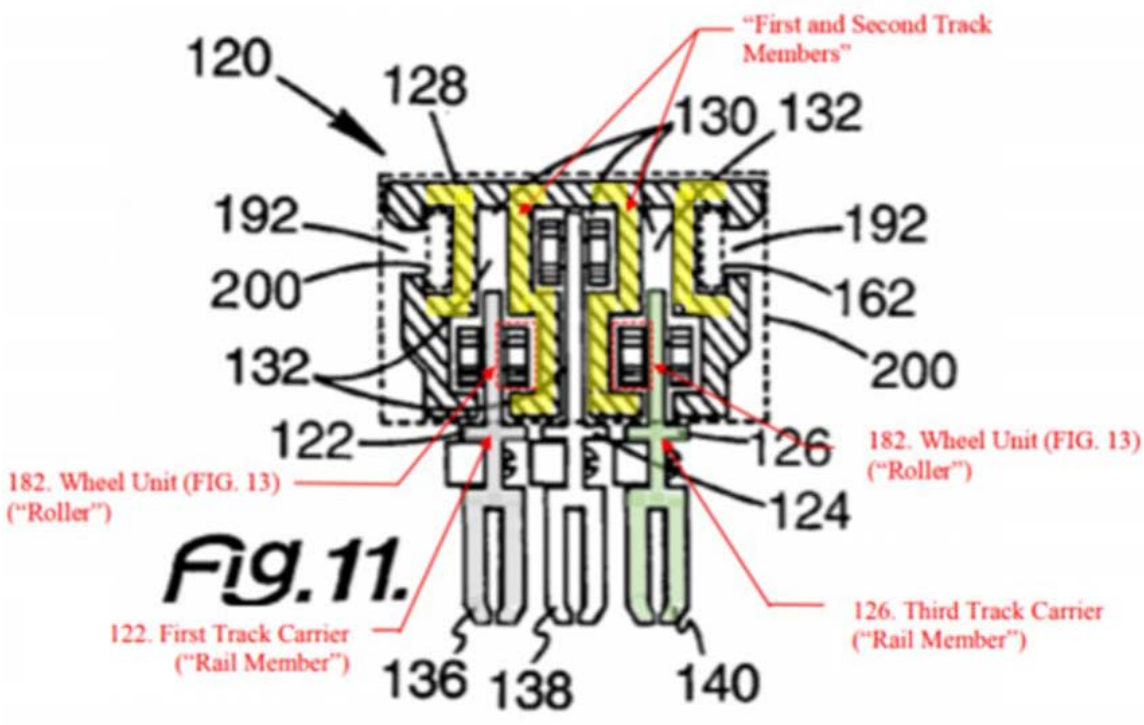

Pet. Supp. Reply 15. We are unpersuaded Petitioner has provided sufficient analysis for this claim limitation. For example, we agree that Comeau discloses "C-shaped arm openings 192 which accept the arms 162 of the end cap 200." Ex. 1010, 6:50–51. Openings 192, however, materially differ in shape from the middle portions of track support 120 highlighted in yellow, and Petitioner has not explained the significance of such differences, or lack thereof. More specifically, the middle portions of track support 120 highlighted in yellow appear to be more akin to an S-shape, rather than a C-shape. While an S-shape could conceivably just be characterized as two stacked C-shapes, it could also be two stacked L-shapes, as asserted by Patent Owner. It is for this exact reason that Petitioner's lack of analysis is fatal. Second, we are unclear what Petitioner's analysis concerning the bottom lateral portion and top portion containing the roller has to do with a

C shape. Finally, Petitioner asserts that "a BRI would include a C shape," but does not provide any further analysis or evidentiary support.

We are unpersuaded that Petitioner has met its burden of showing, by a preponderance of the evidence, that dependent claim 10 is obvious in view of Comeau and Sterling.

6. Conclusion

We are persuaded that Petitioner has met its burden of showing, by a preponderance of the evidence, that claims 1–3, 5, 7–9, 11 and 19–21 are obvious in view of Comeau and Sterling. We are unpersuaded that Petitioner has met its burden of showing, by a preponderance of the evidence, that dependent claims 4, 6, and 10 are obvious in view of Comeau and Sterling.

H. Claims 12–16 and 22–24 as Obvious Over Comeau, Sterling, and Jang

Petitioner challenges claims 12–16 and 22–24 of the '944 patent as obvious over Comeau, Sterling, and Jang. Pet. 10–15, 26–30, 57–66, 68–70. Patent Owner disagrees. PO Supp. Resp. 7–8, 10–13, 15. Petitioner replies. Pet. Supp. Reply 6–13.

1. Analysis of Claims 12, 13, and 22

For most of the claim limitations of claims 12, 13, and 22, Petitioner relies on the analysis of the corresponding limitation from claims 1–11 and 19–21, except that independent claim 12 recites "wherein said first and second track members are recessed in said first and said second door panels respectively. Independent claim 22 recites a similar limitation. For that limitation, Petitioner asserts the following:

> A POSITA would have known to combine Comeau and Jang for the reasons provided in *See supra* Sect. IX. A–B, E.

> Jang discloses a constituent piece with a groove serving as a guide (track) is set back into a plane of a surface of a door panel (or rail member used to support a panel) onto which it is fixed or located. E.g. with respect to FIG. 3, Jang describes "sliding means 5 compris[ing] a fixed bracket 15', one or more rod-shaped sliders 10 and one or more sliding bars 15." Ex. 1012, ¶¶ [0014]; FIG. 3; Ex. 1003, ¶ [0193].

Pet. 63. Patent Owner makes similar assertions as were made for the other grounds concerning the same claim limitation. PO Supp. Resp. 7–8, 15; *see also* PO Obs. 4 (citing Ex. 111, 11–24) (concerning this limitation).

Petitioner replies as follows:

> Comeau does teach this "recessed" limitation. Comeau and Jang both demonstrate track members recessed into a plane of the panel, especially in light of Mr. Clark's testimony that rails and panels are interchangeable. *See* Fig. 20 of Comeau:

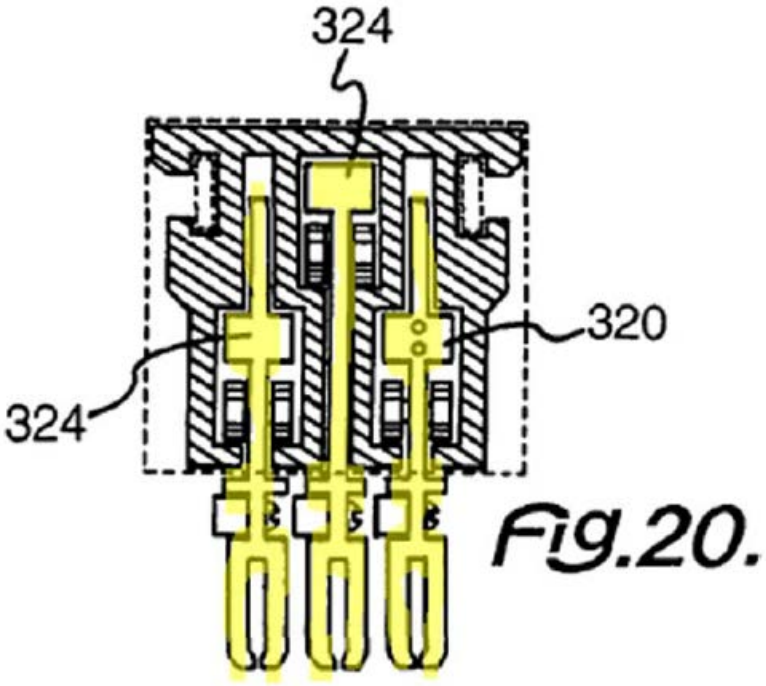

Pet. Supp. Reply 6–7; *see also* Supp. Tr. 8:11–11:24, 29:1–20 (asserting the same); Pet. Obs. 6 (citing Ex. 2006, 111:11–24) (concerning this limitation).

As set forth above, we construe "wherein said first and second track

members are recessed in said first and second door panels, respectively" as "a constituent piece with a groove serving as a guide (track), at least some of which is set back into a plane of a surface of a door panel (or rail member included as part of a panel) onto which it is fixed or located." Portions of track support 120 vertically above and below spacing blocks 324 of Comeau meet that construction. Given this, we have no need to analyze Jang for this limitation.

We are persuaded that Petitioner has met its burden of showing, by a preponderance of the evidence, that claims 12, 13, and 22 are obvious in view of Comeau, Sterling, and Jang.

2. Analysis of Dependent Claims 14–16, 23, and 24

Petitioner asserts that dependent claims 14–16, 23, and 24 are obvious over Comeau, Sterling, and Jang. Pet. 10–15, 26–30, 63–64, 66, 69. Both parties rely on arguments already addressed above for the same claims or same claim limitations in other grounds. PO Supp. Resp. 10–13; Pet. Supp. Reply 8–13. The resulting analysis is the same.

We are persuaded that Petitioner has met its burden of showing, by a preponderance of the evidence, that dependent claims 14, 16, 23, and 24 are obvious in view of Comeau, Sterling, and Jang. We are unpersuaded, however, that Petitioner has met its burden of showing, by a preponderance of the evidence, that dependent claim 15 is obvious in view of Comeau, Sterling, and Jang

3. Conclusion

We are persuaded that Petitioner has met its burden of showing, by a preponderance of the evidence, that dependent claims 12–14, 16, and 22–24 are obvious in view of Comeau, Sterling, and Jang. We are unpersuaded

that Petitioner has met its burden of showing, by a preponderance of the evidence, that claim 15 is obvious in view of Comeau, Sterling, and Jang.

I. Conclusion

For the reasons set forth above, we are persuaded that Petitioner has met its burden of showing, by a preponderance of the evidence, that claims 1–3, 5, 7–9, 11–14, and 16–26 of the ’944 patent are unpatentable on at least one ground set forth in the Petition. Also for the reasons set forth above, we are unpersuaded that Petitioner has met its burden of showing, by a preponderance of the evidence, that claims 4, 6, 10 and 15 of the ’944 patent are unpatentable on any ground set forth in the Petition.

III. CONTINGENT MOTION TO AMEND

In its Motion to Amend, Patent Owner asserts the following:

> If Claims 1, 4, 6, and 10 are all held not patentable, substitute in their place Claims 27–30,
>
> If Claim 4 is held not patentable, substitute in its place Claim 28,
>
> If Claim 6 is held not patentable, substitute in its place Claim 29,
>
> If Claim 10 is held not patentable, substitute in its place Claim 30,
>
> If Claims 12 and 15 are both held not patentable, substitute in their places Claims 31 and 32,
>
> If Claim 15 is held not patentable, substitute in its place Claim 32,
>
> If Claim 19 is held not patentable, substitute in its place Claim 33, and
>
> If Claim 22 is held not patentable, substitute in its place Claim 34.

PO Amend. 2. As none of claims 4, 6, 10 and 15 of the ’944 patent were held unpatentable, based on the above contingencies, we only need to evaluate proposed substitute claims 33 and 34, which read as follows:

> 33. A three door slide assembly, comprising:
>
> a header configured with first and second header tracks;
>
> first and second rail members adapted to slidingly couple to said first and second header tracks;
>
> first and second track members adapted to couple to <u>and move with</u> said first and second rail members respectively; and
>
> a third rail member adapted to slidingly couple to said first and said second track members;
>
> wherein said third rail member is supported by said first and said second track members; and
>
> wherein the alignment of said first and second track members relative to said header remains fixed when alignment of said first or said second rail members is adjusted.
>
> 34. A slide panel assembly adapted to couple to a header with a first track and a second track comprising:
>
> a first panel member adapted to slidingly couple to the first header track;
>
> a first track member coupled to <u>and move with</u> said first panel member;
>
> a second panel member adapted to slidingly couple to the second header track;
>
> a second track member coupled to <u>and move with</u> said second panel member;
>
> a middle panel member adapted to slidingly couple to said first track member and said second track member;
>
> wherein said first and second track members are recessed in said first and said second panels respectively.

PO Amend. 29–30.

A. Procedural Requirements

"Before considering the patentability of any substitute claims, however, the Board first must determine whether the motion to amend meets the statutory and regulatory requirements set forth in 35 U.S.C. § 316(d) and 37 C.F.R. § 42.121." *Western Digital Corp. v. SPEX Techs., Inc.*, Case IPR2018-00082, slip op. at 4 (PTAB Apr. 25, 2018) (Paper 13).

The first requirement is that the Motion to Amend propose a reasonable number of substitute claims. 35 U.S.C. § 316(d)(1)(B). "There is a rebuttable presumption that a reasonable number of substitute claims per challenged claim is one (1) substitute claim. 37 C.F.R. § 42.121(a)(3)." *Western Digital Corp.* at 4. The Petition challenges 26 claims. At most, the Motion to Amend proposes eight (8) claims, of which we need to evaluate only two (2). PO Amend. 2–3. Under any scenario, we find that the number of proposed claims is reasonable.

The second requirement is determining whether the proposed amended claims respond to a ground of unpatentability involved in this trial. *Western Digital Corp.* at 5. To that end, the Motion to Amend proposes adding the phrase "and move with" to make clear that certain track members are coupled to "and move with" certain rail or panel members. PO Amend. 3–7. The Motion to Amend asserts that this is to overcome prior art where the identified track members do not "move with" purported rail or panel members. PO Amend. 3–7. Petitioner responds that the Motion to Amend is not responsive to a ground of unpatentability involved in this trial, because it only includes attorney argument with no evidentiary support. Pet. Amend. 2–3. Patent Owner replies that pages 3–7 of the Motion to Amend do discuss "the significance of the added language 'and move with' in the

context of the prior arguments and the entire record of this case. In this regard, Petitioner appears to confuse the concept of mere 'attorney argument,' with recitation and discussion of facts in the record." PO Reply 9. We agree with Patent Owner, and find that the amended claims are responsive to the grounds of unpatentability involved in this trial.

The third requirement is that "[a] motion to amend may not present substitute claims that enlarge the scope of the claims of the challenged patent or introduce new subject matter. 35 U.S.C. § 316(d); 37 C.F.R. § 41.121(a)(2)(ii)." *Western Digital Corp.* at 7. The Motion to Amend relies primarily on the text of current claims, and further identifies paragraph 67 of the originally specification as providing written description support for the "and move with" limitation. PO Amend. 8–15. Petitioner responds that the Motion to Amend does not demonstrate written description support for the entire claim, and that the cited portion of the original specification does not provide sufficient support for the "and move with" language. Pet. Amend. 3–6. Patent Owner replies that the original specification does support screws for rail connection, and that the nature of the amendment is such that even a simple explanation with a single citation is sufficient to show that it does not introduce new subject matter. PO Reply 10. We agree with Patent Owner, and find that the amended claims do not enlarge the scope of the claim or introduce new subject matter.

Finally, the Motion to Amend includes a claim listing, as required by 37 C.F.R. § 42.121(b). *Western Digital Corp.* at 8. PO Amend. 17–30. Petitioner identifies some deficiencies with respect to the listing of claims 28–30 and 32. Pet. Amend 6–7. As we are evaluating only substitute claims 33 and 34 on the merits, however, this issue is moot.

In view of the above, we find that Patent Owner's Motion to Amend meets the statutory and regulatory requirements of 35 U.S.C. § 316(d) and 37 C.F.R. § 42.121 in a manner sufficient such that Petitioner has the burden of persuasion with respect to patentability.

B. Patentability of Substitute Claims 33 and 34

Petitioner asserts that various claim limitations are disclosed in the prior art. Pet. Amend. 7–20. The only limitation relevant to substitute claims 33 and 34, however, is the "and move with" limitation. For this, Petitioner asserts that it is a functional limitation disclosed in Jang and Cabrales. Pet. Amend. 14–15. Patent Owner replies as follows:

> Further, axiomatically, patentability is determined by the totality of elements actually in the claim, not merely the Examiner's recitation of claimed features absent in the prior art. Even if the missing features were found by the Petitioner in the prior art, there would still need to be some teaching of why a POSITA would make such a combination of elements as are recited in the claims, or a teaching of a deficiency in the prior art which would encourage a POSITA to remedy with the combination, or some other rationale for making the combination found in the claim. The Opposition provides no evidence of that. Merely finding the elements in some other combination is not enough.

PO Reply 11. We agree with Patent Owner. Even if Petitioner has shown sufficiently that the cited references disclose the "and move with" claim limitation, Petitioner has not shown adequately why substitute claims 33 and 34, as a whole, are unpatentable.

Specifically, the main substantive dispute between the parties, throughout the trial, can be summarized in the below two figures. Figure 3 of the '944 patent is reproduced below.

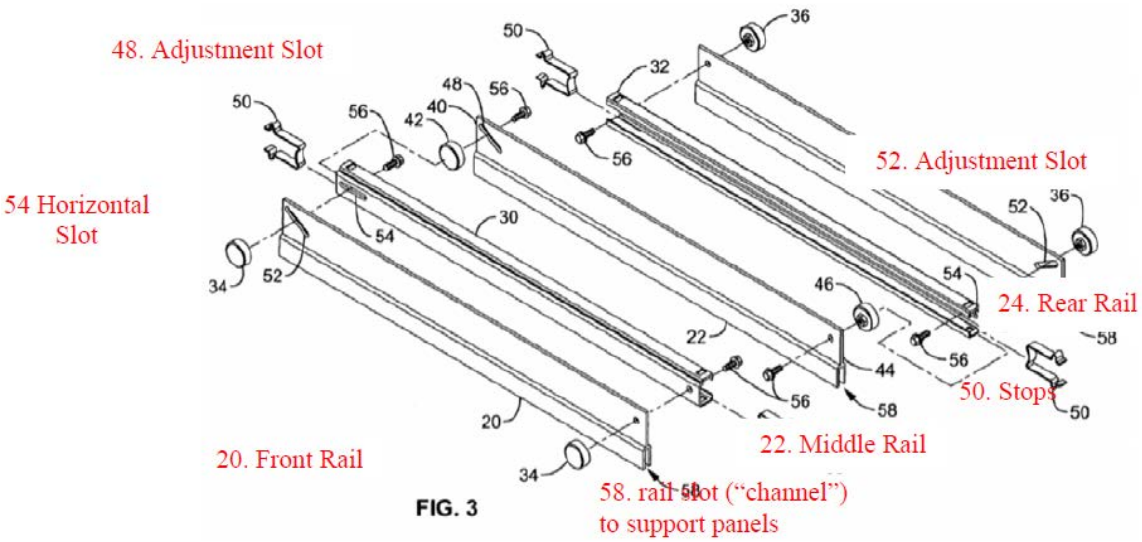

Figure 3 is an exploded view of the track and rail portion of the triple slide assembly 10. It has been annotated to include labels for rails 20, 22, 24, among other items.

Figure 2 of Van Weelden is reproduced below.

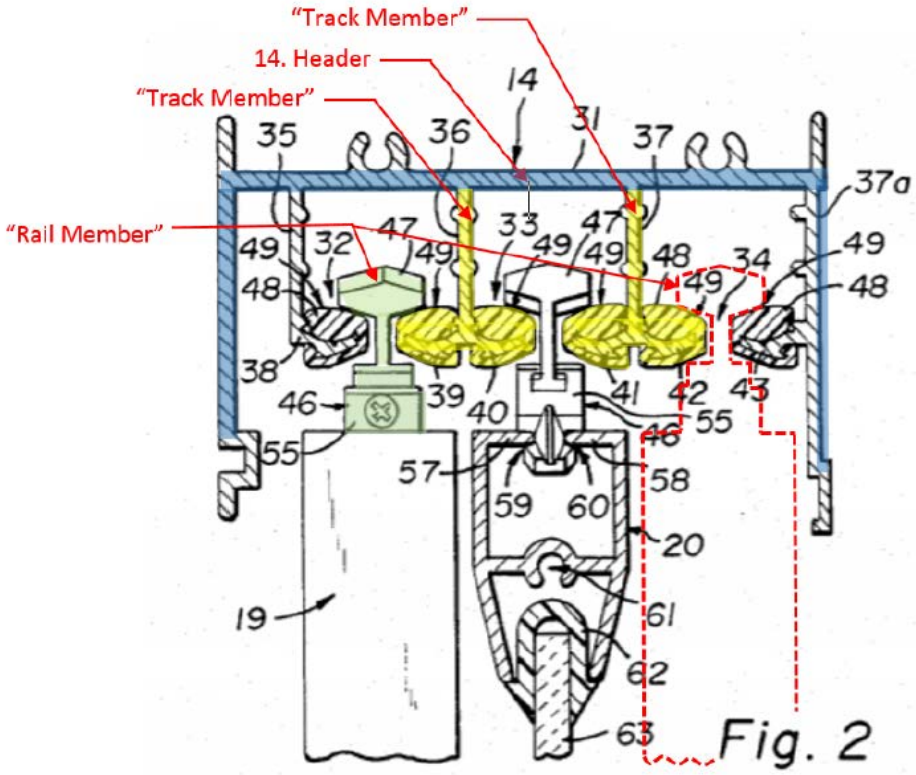

Figure 2 has been annotated to identify, among several items, supporting webs 36, 37, and glides 47 of supporting doors 19, 20

In the ’944 patent, tracks 30, 32 are “attached” to rails 20, 24 with hex screws 56. Ex. 1001, 7:18–19. Because the relevant claim limitation uses the broader term “couple,” however, the Petition successfully applies the portion of supporting webs 36, 37 of Van Weelden highlighted in yellow to correspond to the recited “track members,” and glide 47 of inner supporting door 20 to correspond to the recited “rail member.” In other words, the portion of supporting webs 36, 37 highlighted in yellow and glide 47 are “coupled,” even if they are not “attached.”[26]

To overcome the above mapping to Van Weelden, the Motion to Amend adds the “and move with” language. To show unpatentability, Petitioner must show that the newly added limitation of “and move with” was known, for example, by using Jang and Cabrales. That showing alone would not be sufficient, however, to show that the entire claim is obvious. Petitioner must also show why, in this case, one of ordinary skill would have modified the above mapping of Van Weelden in view of Jang or Cabrales to arrive at the scope of the substitute claim. Petitioner has not done so. Indeed, even if we were to give Petitioner the benefit of the doubt and make several logical extrapolations from the record at hand, it is still unclear how Petitioner would succeed, because such a modification would, by definition, prevent the portion of supporting webs 36, 37 highlighted in yellow and

[26] An analysis of Comeau (Ex. 1010) would yield a similar result.

glide 47 from moving relative to each other, rendering Van Weelden useless.[27]

Petitioner asserts further that the substitute claims are indefinite because Patent Owner requests that the Board declare that the new, additional claim limitation "move with" is a mere clarification of the word "coupled" in the original claims for the purposes of 35 U.S.C. § 252, which Petitioner asserts is illogical in the context of the entire claim. Pet. Amend. 20–23. Patent Owner replies that these indefiniteness arguments stem from a misreading of the claim. PO Reply 12.

As an initial matter, a determination that an amended claim and an original patent claim are substantially identical within the meaning of 35 U.S.C. § 252 is an affirmative request on which patent owner has the burden. Office Patent Trial Practice Guide, 77 Fed. Reg. at 48,766 ("When filing a motion to amend, a patent owner *may demonstrate* that the scope of the amended claim is substantially identical to that of the original patent claim,

---

[27] At the supplemental oral hearing, Petitioner asserted, for the first time, that even an unmodified Van Weelden would meet this claim limitation in the following scenario:

> MR. KINCART: I don't think it's unreasonable. We move devices. So what if we just moved the entire assembly back two inches in installation? I'll become a little bit less ridiculous. It was meant to make a point in the warehouse or shipping it. But what if we move the whole assembly two inches back in installation, have we then violated the claim? What if it's a half an inch?

Supp. Tr. 19:5–10. We are unpersuaded that such a construction of "and move with" is reasonable in light of the cited portions of the Specification, for example, where paragraph 67 describes how the track members and rail members are connected and move together.

as the original patent claim would have been interpreted by a district court. In such cases, a patent owner *may request* that the Board determine that the amended claim and original patent claim are substantially identical within the meaning of 35 U.S.C. 252.") (emphasis added). Patent Owner has made no such showing. Indeed, the Board has adopted the district court construction of "couple" as "join together," and has expressly not included language similar to "and move with" for the reasons set forth above. Accordingly, we decline Patent Owner's invitation with respect to 35 U.S.C. § 252. Returning to the matter at hand, however, in view of the above, we are unpersuaded that Petitioner has shown sufficiently that "and move with," with or without its surrounding terms, is indefinite.

Finally, Petitioner asserts that the Motion to Amend should be denied because Patent Owner did not fulfill its duty of candor. Specifically, Petitioner asserts that, based on the inventor's testimony and the face of the patent alone, Patent Owner should have provided at least some references concerning the added limitation of "and move with." Pet. Amend. 23–25 (citing Ex. 1040, 43:12–14). Patent Owner responds that "Petitioner cites no material reference omitted by the Patent Owner." PO Reply 12. On this record, we agree with Patent Owner that such a supposition is no more than speculation.

C. Patentability Conclusion

For its Motion to Amend, we are persuaded that Patent Owner has met the procedural requirements for replacing original claims 19 and 22 with substitute claims 33 and 34. We are also unpersuaded that Petitioner has met its burden of showing, by preponderance of the evidence, that substitute claims 33 and 34 are unpatentable.

IV. MOTION TO EXCLUDE

Patent Owner files a Motion to Exclude portions of Exhibits 1003, 1009, and 1034. PO Mot. 1–15. Petitioner filed an Opposition. Pet. Opp. 1–15. For the reasons set forth below, the Motion is *denied*.

1. Exhibit 1003

Exhibit 1003 is the Declaration of Mr. Poenariu filed with the Petition. Mr. Poenariu is advanced as one of Petitioner's experts on which it relies. As a predicate to filing a motion to exclude, the moving party must first file an objection for the exhibit within certain time periods. This case is one of those affected by *SAS*, however, and so the parties dispute whether Patent Owner's objections filed May 7, 2018 for Exhibit 1003 is procedurally proper. PO Mot. 1–3; Pet. Opp. 1–6. For Exhibit 1003, we determine that the issue is moot, because we deny Patent Owner's request on substantive grounds.

Patent Owner challenges Exhibit 1003 under F.R.E. 401, 402, 602, 701, 702 and 37 C.F.R. § 42.65(a). Specifically, Patent Owner asserts that Mr. Poenariu's testimony is entirely based on his finding as to the level of ordinary skill in the art, and because Mr. Poenariu did not articulate a sufficient factual basis for his conclusion as to the level of ordinary skill in the art, his entire testimony us unreliable and should be excluded. PO Mot. 5–6. Petitioner responds that Mr. Poenariu discloses more than a sufficient amount of underlying facts on which to base his testimony, and, thus, Patent Owner's assertions go to weight and not admissibility. Pet. Opp. 6–9. We agree with Petitioner.

We find that Mr. Poenariu's testimony discloses the underlying facts on which he bases his finding as to the level of ordinary skill in the art, at

least for the purposes of 37 C.F.R. § 42.65(a). Indeed, we have addressed those facts, and Patent Owner's assertions concerning those facts, in our above analysis of the level of ordinary skill in the art. Patent Owner clearly disagrees that these are the proper facts to consider for such an inquiry. That, however, is an issue of weight and not admissibility.

Addressing the other Rules referenced, we are unpersuaded that F.R.E. 401 and 402 are proper bases for excluding Exhibit 1003. As a general matter, relevance is applied broadly, and we are unpersuaded that Mr. Poenariu's testimony is not relevant to the issues in this case. For F.R.E. 602, we are unpersuaded that Mr. Poenariu is testifying from anything other than his personal knowledge. He is an engineer testifying about what engineers know. For F.R.E. 701 and 702, we are unpersuaded that Mr. Poenariu's testimony should be excluded on that basis, as "[t]he policy considerations for excluding expert testimony, such as those implemented by the gatekeeping framework established by the Supreme Court in *Daubert*, are less compelling in bench proceedings, such as *inter partes* reviews, than in jury trials." *Legend3D, Inc. v. Prime Focus Creatives Servs. Canada Inc.*, IPR2016-00806, Paper 73, at pp. 10–11 (Sept. 18, 2017).

2. Exhibit 1034

Exhibit 1034 is a Declaration of Mr. Dowd filed with Petitioner's Supplemental Reply. Patent Owner requests that Exhibit 1034 be excluded for reasons similar to that of Exhibit 1003. PO Mot. 10–13; *see also* PO Obs. 9–10 (citing Ex. 2006, 40:2–11, 45:22–46:19, 64:10–65:1) (concerning the same). Petitioner responds in a similar fashion. Pet. Opp. 9–10; *see also* Pet. Obs. 12–13 (citing Ex. 2006, 2:20–23, 60:5–10) (concerning the same).

We agree with Petitioner for reasons analogous to those set forth above for Exhibit 1003.

3. Exhibit 1009

Exhibit 1009 is the Sterling reference, which was filed with the Petition. The Decision on Institution in this proceeding, which included a challenge based on Sterling, was issued on July 20, 2017. Under our Rules, in order to move to exclude Exhibit 1009, Patent Owner had to first file an objection within five business days of July 20, 2017. 37 C.F.R. § 42.64(b)(1). Patent Owner bases its request here, however, on an objection made May 7, 2018. PO Mot. 6–7. Patent Owner asserts that this was proper because our *SAS* Order was a new decision on institution. PO Mot. 7. Petitioner responds that the Board has made clear the *SAS* Order is not a new decision on institution and that, holistically, there is no reason to excuse Patent Owner's delayed objection. Pet. Opp. 2–6. We agree with Petitioner.

Motions to exclude concern admissibility. Patent Owner's late objection could perhaps be excused if, between July 20, 2017 and May 7, 2018, there was a change in circumstances in that time period that changed the nature of Exhibit 1009 itself with respect to admissibility. Patent Owner identifies the *SAS* Order as such a change. The problem, however, is that Patent Owner has not identified how the *SAS* Order altered the nature of Exhibit 1009 itself with respect to admissibility. To the contrary, Exhibit 1009 itself has remained unchanged since its filing with the Petition. Accordingly, any admissibility issues with Exhibit 1009 would have been present since the Petition's filing. Moreover, with our Decision on Institution issued on July 20, 2017, Patent Owner was on notice of the need

to timely object to Exhibit 1009 in order to seek its exclusion. Patent Owner, who has the burden on this issue, has not persuaded us otherwise. We are unpersuaded that Patent Owner's objection made on May 7, 2018 should be considered timely, in which case no proper objection was made, and the underlying procedural predicate for moving to exclude Exhibit 1009 does not exist.

4. Conclusion

Patent Owner's Motion to Exclude Exhibits 1003, 1009, and 1034 is *denied*.

V. ORDER

In consideration of the foregoing, it is hereby:

ORDERED that claims 1–3, 5, 7–9, 11–14, and 16–26 of the '944 patent are held unpatentable;

FURTHER ORDERED that claims 4, 6, 10, and 15 are held patentable;

FURTHER ORDERED that Patent Owner's Motion to Amend is *granted* with respect to substitute claims 33 and 34 only;

FURTHER ORDERED that Patent Owner's Motion to Exclude is *denied*; and

FURTHER ORDERED that, because this is a Final Written Decision, parties to the proceeding seeking judicial review of the Decision must comply with the notice and service requirements of 37 C.F.R. § 90.2.

DEFRANCO, *Administrative Patent Judge, dissenting-in-part*.

I respectfully dissent from the portion of the majority decision holding that Petitioner failed to prove dependent claim 10 unpatentable as obvious

over Comeau and Sterling. *See* Section II.G.5 *supra*. Claim 10 requires that "said first and second track members *have a C shape cross section*." Ex. 1001, 11:18–20 (emphasis added). In analyzing claim 1, from which claim 10 depends, we find that Petitioner demonstrates that "Comeau alone" teaches the claimed "first and second track members." Section II.G.2 *supra*. In contrast to my colleagues, I would also find that Comeau teaches a "C-shape cross section" for each of the first and second track members, as recited by claim 10.

To teach the limitation of claim 10, Petitioner provides an annotated figure from Comeau, highlighting in yellow the cross section of the inner track members. Pet. 55; *see also* Pet. Supp. Reply 15. A comparison between the highlighted cross section of Comeau's track members and the cross section of the track members of the challenged '944 patent illustrates their similarity.

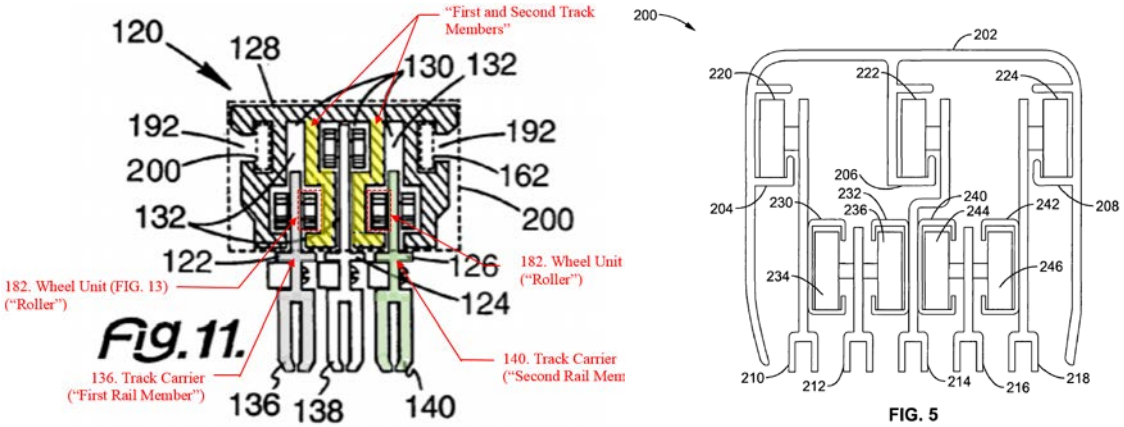

Annotated Figure 11 of Comeau, shown above left, depicts inner track members (lower portion of yellow-shading) affixed to vertical supports (upper portion of yellow-shading), which, in turn, are integrated with header 128. Likewise, Figure 5 of the challenged '944 patent, shown above right, depicts inner track members 232, 240 affixed to a vertical support (not

numbered), which, in turn, is mechanically attached to header 202 via roller 222. That is, the track members in both Comeau and the ’944 patent comprise (1) a C-shaped channel for retaining a roller and (2) a vertical support for affixing the channel to a header.

Despite the apparent similarity of the C-shaped tracks of Comeau to those of the ’944 patent, the majority inexplicably is “unpersuaded Petitioner has provided sufficient analysis” that Comeau meets the limitation of claim 10. Section II.G.5 *supra*. I fail to grasp what more the majority might require, especially given the majority’s finding that Petitioner’s annotation of Comeau’s Figure 11 was sufficient enough to show the claimed “first and second track members” of claim 1. *See* Section II.G.2 *supra*. That same annotated figure, from my viewpoint, also suffices to show a “C-shape cross section” for the track members, as required by dependent claim 10.

Indeed, during prosecution of the ’944 patent, the examiner came to the same conclusion, rejecting what eventually became claim 10 (original claim 19) “as being anticipated by Comeau ([U.S. Patent] 6892783)” before allowing the claim for other reasons relating to language added to claim 1. Ex. 1002, 34; *see also id.* at 8 (reasons for allowance), 16 (amended original claim 9, now claim 1), 18 (original claim 19, now claim 10). Only one reason comes to mind for the majority now finding otherwise. Although it does not say so expressly, the majority appears to construe the term “have” in claim 10 in a closed manner, meaning that each track member must consist *solely* of a C-shaped cross section to the exclusion of a partly C-shaped cross section. In that regard, the majority finds that Comeau’s track member is “more akin to an S-shape,” or “two stacked C-shapes,” or even “two-stacked L-shapes, as asserted by Patent Owner.” Section II.G.5 *supra*.

That finding indicates the majority must be invoking the term "have" in claim 10 as a closed transitional term that precludes the track member from having a cross section that builds on a C-shape, such as the cross section depicted in Comeau's Figure 11.

In that vein, I disagree with my colleagues, for neither the claim language nor the specification of the '944 patent manifest an objective intent to close the scope of claim 10. In my view, claim 10 should be construed in an open sense, meaning that, while the recited "C-shape cross section" is essential to claim 10, "other elements may be added and still form a construct within the scope of the claim." *Genentech, Inc. v. Chiron Corp.*, 112 F.3d 495, 501 (Fed. Cir 1997). I find it hard to fathom that the patentee intended for the term "have" to be closed when the specification provides expressly that "[a]ll structural . . . and functional equivalents to the elements of the above-described preferred embodiments that are known to those of ordinary skill in the art . . . *are intended to be encompassed by the present claims*." Ex. 1001, 10:22–26 (emphasis added). That language, albeit boilerplate, nonetheless serves to indicate the patentee's intent that the claims be construed openly to encompass more than what is recited.

Indeed, the specification identifies several cross sections that fulfill the role of a track member, including not only a "preferable 'C' cross section as an anti-jump feature to keep rollers [] positively locked in tracks," but also an "H" and "J" cross section that likewise incorporate a channel-like shape. That description informs a skilled artisan that, while at least a portion of the track member must have a "C," "H," or "J"-shape, its overall cross section may include an additional portion so long as it does not alter the track's primary function of retaining a roller. In other words, nothing in the

specification prevents the track member from having a portion of its cross section that is C-shaped and a portion that is not. As such, in my opinion, the term "have," in the context of claim 10, is open-ended. Thus, I would find that Comeau's track member, in which at least a part of the cross section is C-shaped, meets the limitation of claim 10. For this reason, I dissent from the portion of the majority decision finding otherwise.

PETITIONER:

Joseph Kincart
jkincart@rtlaw.com

Andres Arrubla
aarrubla@coastalind.com

PATENT OWNER:

Ryan Fountain
ryanfountain@aol.com

John O'Banion
docketing@intellectual.com