Trials@uspto.gov
571.272.7822

Paper No. 31
Filed: August 31, 2018

UNITED STATES PATENT AND TRADEMARK OFFICE

BEFORE THE PATENT TRIAL AND APPEAL BOARD

SONY CORPORATION,
Petitioner,

v.

COLLABO INNOVATIONS, INC.,
Patent Owner.

Case IPR2017-00958
Patent 7,023,034 B2

Before DAVID C. McKONE, GREGG I. ANDERSON, and JENNIFER MEYER CHAGNON, *Administrative Patent Judges*.

PER CURIAM.

Opinion Dissenting-in-Part filed by *Administrative Patent Judge* ANDERSON.

FINAL WRITTEN DECISION
35 U.S.C. § 318(a) and 37 C.F.R. § 42.73

I. INTRODUCTION

Sony Corporation ("Petitioner")[1] filed a Petition (Paper 1, "Pet.") pursuant to 35 U.S.C. §§ 311–319 to institute an *inter partes* review of claims 1–18 ("the challenged claims") of US Patent No. 7,023,034 B2 ("the '034 patent," Ex. 1001), filed July 15, 2004.[2] The Petition is supported by the Declaration of R. Michael Guidash ("Guidash Declaration," Ex. 1002). Collabo Innovations, Inc. ("Patent Owner")[3] filed a Preliminary Response (Paper 6, "Prelim. Resp."). We instituted an *inter partes* review of the challenged claims ("Institution Decision" or "Inst. Dec.," Paper 8).

Patent Owner filed a Response ("PO Resp.," Paper 19), and Petitioner filed a Reply ("Pet. Reply," Paper 22). Patent Owner's Response is supported by the Declaration of Martin Afromowitz, Ph.D. ("Afromowitz Declaration," Ex. 2003). Mr. Guidash was deposed by Patent Owner. ("Guidash Deposition," Exs. 2004, 2005). Dr. Afromowitz was deposed by Petitioner ("Afromowitz Deposition," Ex. 1020). An oral hearing was held on May 9, 2018, and a transcript thereof has been entered into the record ("Tr.," Paper 30).

Patent Owner filed a Motion to Exclude Evidence ("Motion," Paper 24), Petitioner filed an Opposition to the Motion ("Opposition," Paper 26), and Patent Owner filed a Reply in support of the Motion (Paper 28).

---

[1] Petitioner identifies Sony Corporation, Sony Corporation of America, and Sony Electronics Inc., as real parties-in-interest. Pet. 1.
[2] The '034 patent claims priority to Japanese Application No. 2003-307696, filed August 29, 2003. Ex. 1001 (30).
[3] Patent Owner identifies Collabo Innovations, Inc., Wi-LAN Technologies Inc., and Wi-LAN Inc., as real parties-in-interest. Paper 5, 1.

The Board has jurisdiction under 35 U.S.C. § 6. This Final Written Decision issues pursuant to 35 U.S.C. § 318(a) and 37 C.F.R. § 42.73. For the reasons that follow, we determine that Petitioner has shown by a preponderance of the evidence that claims 1–18 are unpatentable.

II. BACKGROUND

A. Related Proceedings

The ’034 patent has been asserted by Patent Owner against Petitioner in *Collabo Innovations, Inc. v. Sony Corp.*, Case No. 1-15-cv-01094 (D. Del.). Pet. 1, Paper 5, 1. Patent Owner also identifies *Collabo Innovations, Inc. v. Omnivision Technologies, Inc.*, Case No. 1-16-cv-00197-UNA (D. Del.) as another case where it has asserted the ’034 patent. Paper 5, 1. A separate petition for *inter partes* review[4] was filed concurrently by Petitioner, also directed to claims 1–18 of the ’034 patent.

B. Technology

The invention of the ’034 patent relates to solid state imaging devices in which “a plurality of light-sensitive elements are arranged in a matrix form.” Ex. 1001, 1:7–10. A discussion of the field of technology in general, and the ’034 patent more specifically, follows.

1. Background of the Technology

“[T]o improve the light collecting power of a solid-state imaging device typified by a CCD,[5] there exists a solid-state imaging device in which two micro lenses are formed as shown in FIG. 8,” reproduced below. Ex. 1001, 1:12–17.

---

[4] *Sony Corp. v. Collabo Innovations, Inc.*, Case IPR2017-00960 (“’960 IPR”).
[5] Charge-coupled device. Ex. 2003 ¶ 41.

FIG. 8 PRIOR ART

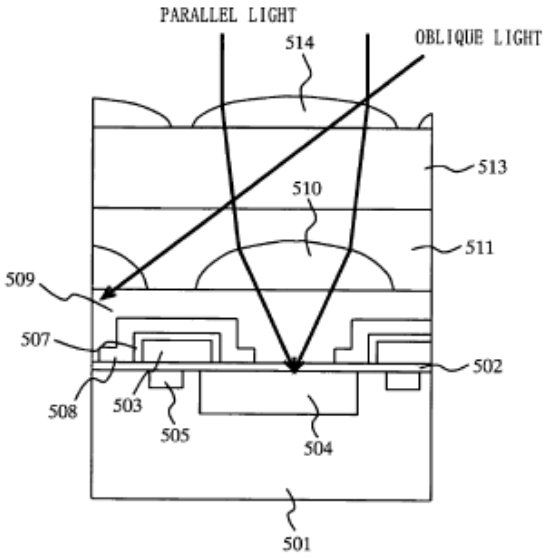

Figure 8 illustrates the prior art solid-state imaging device. *Id.* at 1:15–17, 4:36–37. The solid-state imaging device "includes a semiconductor substrate 501, a gate insulating film 502, a gate electrode 503, a photodiode 504, a charge transfer section 505, an interlayer insulating film 507, a light-shielding film 508, an insulating film 509, an intralayer lens 510, a planarization film 511, a color filter 513, and an on-chip micro lens 514." *Id.* at 1:18–25. Insulating film 509 is formed on light-shielding film 508. *Id.* at 1:34–35. On-chip micro lens 514 is formed on color filter 513 for each photodiode 504. *Id.* at 1:38–39.

As described in connection with the prior art shown in Figure 8, "the on-chip micro lens 514 is formed on the top layer of the solid-state imaging device, and the intralayer lens 510 is formed in the planarization film 511." Ex. 1001, 1:41–43. "As such, two micro lenses are formed for each photodiode 504, whereby it is possible to further efficiently collect light onto the photodiode 504." *Id.* at 1:43–46. The prior art shown in Figure 8 has a problem, however, in that it allows "color mixing" to occur when oblique

light, i.e., "light entering the solid-state imaging device obliquely from above," enters the adjacent pixel. *Id.* at 1:47–51.

The '034 patent describes a second prior art device, shown in Figure 9, as a "solid-state imaging device capable of preventing color mixing caused by the oblique light." Ex. 1001, 1:52–54. Figure 9 of the '034 patent is reproduced below.

FIG. 9 PRIOR ART

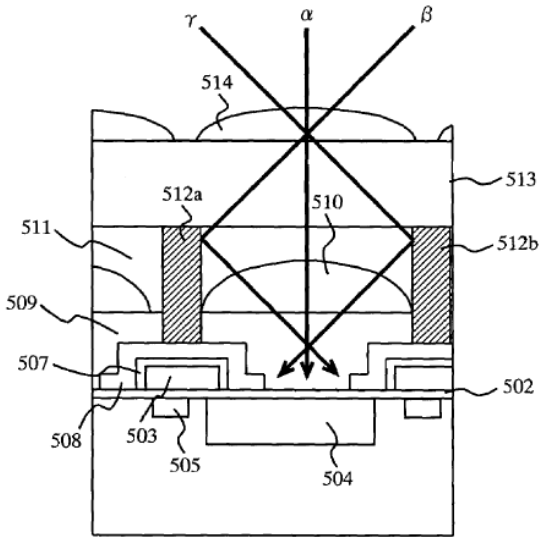

Figure 9 is a cross sectional view of this prior art solid-state imaging device. *Id.* at 1:54–56, 4:38–39. "The solid-state imaging device as shown in FIG. 9 differs from the solid-state imaging device as shown in FIG. 8 in that reflecting walls 512*a* and 512*b* are additionally provided on both sides of the intralayer lens 510." *Id.* at 1:57–60. The addition of reflecting walls, as shown in Figure 9, improves light sensitivity of the solid-state imaging device, but there is "still variation in the light sensitivity among the pixels of the solid-state imaging device." *Id.* at 2:4–8.

Figure 10 of the '034 patent shows the "distribution of light sensitivity of a camera device with an optical lens, into which a solid-state imaging

device [of Figure 9] is built." Ex. 1001, 2:8–12. Figure 10 is reproduced below.

FIG. 10 PRIOR ART

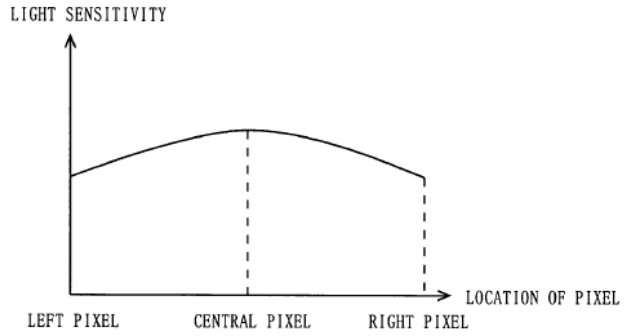

Figure 10 shows "a distribution of light sensitivity of the conventional solid-state imaging device." *Id.* at 4:40–41. The vertical axis in Figure 10 represents light sensitivity, and the horizontal axis represents a position of a pixel in the solid-state imaging device. *Id.* at 2:12–14. Referring again to Figure 9, a pixel lying near the center of the solid-state imaging device, generally along the vertical axis, has a higher percentage of light incident from immediately above (denoted as α), than a pixel lying in a right area receiving oblique light incident from the left (denoted as β) or a pixel lying in a left area receiving oblique light incident from the right (denoted as γ). *Id.* at 2:15–28. As a result of having more oblique light, there are inefficiencies from light hitting the pixel in the right and left area and lower light sensitivity than the pixel in the central area. *Id.* at 2:39–42. This is the problem of "corner shading" described below.

Patent Owner, through the Afromowitz Declaration testimony, summarizes the two problems discussed above in connection with Figures 8 and 9 of the '034 patent. *See* PO Resp. 5–10. "Corner shading" results from light impinging on peripheral pixels of the image sensor. *Id.* at 5–7 (citing

Ex. 2003 ¶ 29). "Color mixing" occurs when "color varies across the image, even though the wall that was photographed was all the same color and uniformly lit." *Id.* at 7; *see id.* at 7–10 (citing Ex. 2003 ¶¶ 30–35).

2. The '034 Patent (Ex. 1001)

The '034 patent describes and claims "a solid-state imaging device capable of preventing color mixing caused by oblique light, and reducing variation in light sensitivity among pixels." Ex. 1001, 2:51–53. Figures 2A through 2C are reproduced below.

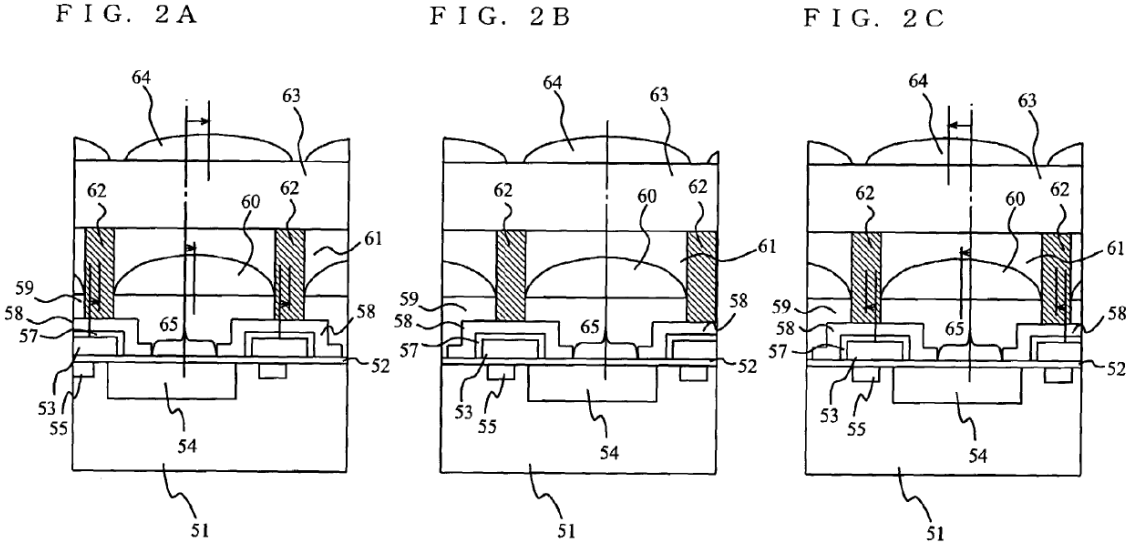

Figures 2A through 2C are cross section views of pixels located at the left and right edges and the center of a photoreceiving region of the solid-state imaging device. *Id.* at 5:7–12, 6:8–14.[6] As shown in Figures 2A through 2C, a pixel of the solid-state imaging device according to the present

[6] The cited portions of Exhibit 1001 uses right, center, and left in describing respectively Figures 2A, 2B, and 2C. At another part of the '034 patent, Figure 2A is described as the left edge and 2C as the right edge. *See* Ex. 1001, 4:50–54. This discrepancy was noted in the Institution Decision. Inst. Dec. 6 n.5. Neither party argued the issue during trial, and the distinction is not relevant to the parties' dispute. We proceed with the left to right description as stated in this Section II.B.2.

embodiment includes, among other parts, semiconductor substrate 51, photodiode 54, interlayer insulating film 57, light-shielding film 58, insulating film 59, intralayer lens 60, reflecting wall 62, and on-chip micro lens 64. *Id.* at 5:16–23. Light passes to photodiode 54 through aperture 65. *Id.* at 5:45–47. "[A]pertures 65 are formed immediately above the respective photodiodes 54 in a matrix form at regular spacings." *Id.* at 5:47–49; *see also id.* at Fig. 3 (matrix).

"The reflecting wall 62 of the solid-state imaging device according to the prese[n]t embodiment is formed so that a middle point between the reflecting walls opposing each other across the aperture 65 is displaced from the center of the aperture 65 toward the center of the photoreceiving region." Ex. 1001, 6:3–8. The photoreceiving region is described with reference to a simplified 5×5 matrix. *Id.* at 6:24–29, Fig. 3. "[O]penings 65 are formed in a matrix format [at] regular spacings on the light-shielding film 58" and "reflecting walls 62 are formed over the light-shielding film 58 in a grid pattern." *Id.* at 6:30–33. The "further the aperture 65 is away from the center of the photoreceiving region, the further the reflecting wall 62 is displaced toward the center of the photoreceiving region relative to the aperture 65, whereby it is possible to efficiently collect incident light onto the photodiode 54 in a position away from the center of the photoreceiving region." *Id.* at 6:38–44.

C. Illustrative Claim

Of the challenged claims, claims 1 and 10 are independent apparatus claims. Claims 2–9 depend directly or indirectly from claim 1. Claims 11–18 depend directly or indirectly from claim 10. Claim 1 is reproduced below:

1[a].[7] A solid-state imaging device comprising:

[1b] a semiconductor substrate;

[1c] a photoreceiving region provided on the semiconductor substrate;

[1d] a plurality of light-sensitive elements provided in the photoreceiving region;

[1e] a plurality of apertures, which are provided over the light-sensitive elements, for delivering an incident light to the light-sensitive elements;

[1f] a plurality of reflecting walls formed over the light-sensitive elements and the apertures so as to oppose each other across the apertures; and

[1g] a plurality of micro lenses provided over the reflecting walls and the apertures,

[1h] wherein the plurality of micro lenses disposed in an inner periphery of the photoreceiving region, and the plurality of reflecting walls corresponding to the micro lenses are disposed such that a center of each of the micro lenses and a center of each of the reflecting walls opposing each other are displaced from a center of the aperture toward a center of the photoreceiving region, and

an amount of displacement between the center of the photoreceiving region and the center of the reflecting walls is smaller than that of displacement between the

[7] We adopt the Petition's use of the claim number followed by alphabetical designations for each claim limitation, e.g., 1[a] for the claim preamble and [1b]–[1h] for all other limitations. *See* Pet. 22–38.

> center of the photoreceiving region and the center of the micro lens.

Ex. 1001, 10:2–28.

D. Grounds Upon Which Trial was Instituted

Trial was instituted on claims 1–18 of the ’034 patent on the following grounds. Inst. Dec. 46.

Reference(s)	Basis	Claim(s) Challenged
Tomoda[8]	§ 102(b)[9]	1, 2, 5, 9
Tomoda and Abe[10]	§ 103	3, 8
Tomoda and Kimura[11]	§ 103	4
Tomoda and Aoki[12]	§ 103	6, 7
Tomoda, Kimura, and Kuroiwa[13]	§ 103	10, 11, 13, 14, 18
Tomoda, Kimura, Kuroiwa, and Abe	§ 103	12, 17

[8] JP Pat. Appl. Pub. No. 2001-237404, to Naoki Tomoda et al., published Aug. 31, 2001 (“Tomoda,” Ex. 1003 (English translation)/Ex. 1004, (Japanese)). All references to Tomoda and the other translated Japanese references are to the English translations.
[9] The Leahy-Smith America Invents Act (AIA), Pub. L. No. 112-29, 125 Stat. 284, 285–88 (2011), which revised 35 U.S.C. §§ 102 and 103, became effective March 16, 2013. The ’034 patent has an effective filing date of August 29, 2003, prior to the effective date of the AIA. Ex. 1001 (30). Thus, the grounds asserted are under the pre-AIA version of §§ 102 and 103.
[10] JP Pat. Appl. Pub. No. H11-087674, to Shuji Abe, published March 30, 1999 (“Abe,” Ex. 1005 (English translation)/Ex. 1006 (Japanese)).
[11] JP Pat. Appl. Pub. No. 2001-077339, to Tadao Kimura, published March 23, 2001 (“Kimura,” Ex. 1007 (English translation)/Ex. 1008 (Japanese)).
[12] JP Pat. Appl. Pub. No. H06-224398, to Tetsuro Aoki, published Aug. 12, 1994 (“Aoki,” Ex. 1017 (English translation)/Ex. 1018 (Japanese)).
[13] JP Pat. Appl. Pub. No. H10-229180, to Jun Kuroiwa, published Aug. 25, 1998 (“Kuroiwa,” Ex. 1009 (English translation)/Ex. 1010 (Japanese)).

Reference(s)	Basis	Claim(s) Challenged
Tomoda, Kimura, Kuroiwa, and Aoki	§ 103	15, 16

III. ANALYSIS

A. Claim Construction

In an *inter partes* review, claim terms are given their broadest reasonable interpretation in light of the specification in which they appear. *Cuozzo Speed Techs., LLC v. Lee*, 136 S. Ct. 2131, 2144–46 (2016); 37 C.F.R. § 42.100(b). We presume that claim terms have their ordinary and customary meaning. *See TriVascular, Inc. v. Samuels*, 812 F.3d 1056, 1061–62 (Fed. Cir. 2016) ("Under a broadest reasonable interpretation, words of the claim must be given their plain meaning, unless such meaning is inconsistent with the specification and prosecution history." (citation omitted)); *In re Translogic Tech., Inc.*, 504 F.3d 1249, 1257 (Fed. Cir. 2007). Any special definition for a claim term must be set forth in the specification with reasonable clarity, deliberateness, and precision. *In re Paulsen*, 30 F.3d 1475, 1480 (Fed. Cir. 1994). In the absence of such a special definition or other consideration, "limitations are not to be read into the claims from the specification." *In re Van Geuns*, 988 F.2d 1181, 1184 (Fed. Cir. 1993). Only those terms that are in controversy need to be construed and only to the extent necessary to resolve the controversy. *See Vivid Techs. Inc. v. Am. Sci. & Eng'g, Inc.*, 200 F.3d 795, 803 (Fed. Cir. 1999).

Petitioner proposes constructions for "photoreceiving region," "reflecting walls," and the wherein clause of claim 1. Pet. 10–20. We construed those three terms in the Institution Decision. Inst. Dec. 10–15.

Patent Owner indicates in the Response that it "applies the Board's construction for its analysis, but reserves the right to seek alternative constructions in other proceedings and matters." PO Resp. 22.

As explained in Section III.A.1 below, Patent Owner disputes the construction of "reflecting walls." Based on the Response, no other term is in dispute. The other two terms construed in the Institution Decision are not disputed, but are repeated for completeness.

1. "reflecting walls" (claims 1, 2, 4, 5, 6, 10, 11, 13, 14, 15)

Petitioner proposes that "reflecting walls" be construed as "structures having approximately vertical surfaces that reflect light." Pet. 14 (citing Ex. 1002 ¶¶ 71–72[14]). We adopted this construction in the Institution Decision. Inst. Dec. 12. Patent Owner offered no construction in its Preliminary Response and, as stated above, Patent Owner "applie[d] the Board's construction" in its Response. Prelim. Resp. 14; PO Resp. 22. Notwithstanding the preceding, Patent Owner argued the preliminary construction in the Institution Decision was "overly broad." PO Resp. 30; Tr. 25:23–26:19. For the first time at the oral hearing, Patent Owner argued that construction was not required and that the "plain and ordinary meaning" should be applied. Tr. 27:4–28:24. At the oral hearing, Patent Owner also argued it disagreed with the preliminary construction of "reflecting walls"

[14] Patent Owner notes that the Guidash Declaration states incorrectly that the '034 patent is expired. Prelim. Resp. 10 (citing Ex. 1002 ¶ 22). Nonetheless, the Guidash Declaration states the correct standard for construing claims of an unexpired patent. Ex. 1002 ¶ 22. We see no reason to discount the technical testimony on an incorrect statement of the law where the correct standard is applied. Patent Owner does not assert anything to the contrary.

and, contrary to its statements in the Response, indicated that a "new construction is necessary." *Id.* at 31:6–17.

Ultimately, Patent Owner requested "additional briefing on the construction of reflecting walls." Tr. 34:3–14. We denied Patent Owner's request based primarily on its lateness, occurring at oral hearing after the filing of Petitioner's Reply and the taking of Patent Owner's expert's deposition. *See* Order, Conduct of the Proceedings, dated May 14, 2018, Paper 29, 3. In addition, even at the oral hearing, Patent Owner never proposed an alternative express construction for "reflecting walls," at most arguing construction is not necessary and that plain and ordinary meaning should be applied. *See* Tr. 27:4–28:24.

Patent Owner expressly or impliedly waived any argument contrary to the preliminary construction from the Institution Decision by not raising it in its Response. *See* PO Resp. 22; *see also* Scheduling Order, Paper 9, 3 ("**The patent owner is cautioned that any arguments for patentability not raised in the response may be deemed waived.**"). Further, Patent Owner argued at oral hearing that "[w]e have stated that the plain and ordinary meaning of the term is what should govern the term." Tr. 28:16–21. However, this assertion is not supported in its Response, which states that "Patent Owner applies the Board's construction for its analysis" without mention of plain and ordinary meaning. PO Resp. 21–23.

Adequate notice of Patent Owner's position on the construction of "reflecting walls" was required. *See Genzyme Therapeutic Prod. Ltd. P'ship v. Biomarin Pharm. Inc.*, 825 F.3d 1360, 1367 (Fed. Cir. 2016) (quoting *Pub. Serv. Comm'n of Ky. v. FERC*, 397 F.3d 1004, 1012 (D.C. Cir. 2005) (Roberts, J.) ("The critical question for compliance with the APA and due

process is whether Genzyme received 'adequate notice of the issues that would be considered, and ultimately resolved, at that hearing.'")). At best, Patent Owner's position is ambiguous and does not provide "adequate notice." Further, we need not consider Patent Owner's arguments raised for the first time at the oral hearing. *See Dell Inc. v. Acceleron, LLC*, 884 F.3d 1364, 1369 (Fed. Cir. 2018) (holding that the Board was not obligated to consider an "untimely argument . . . raised for the first time during oral argument").

We are not persuaded that we should abrogate our preliminary construction and apply a plain and ordinary meaning to "reflecting walls." At the oral hearing, Patent Owner did not explain sufficiently how we should apply the plain and ordinary meaning. Thus, we are not persuaded that the plain and ordinary meaning would be any narrower than the present construction of "structures having approximately vertical surfaces that reflect light," which Patent Owner contends is "overly broad." *See* PO Resp. 30; Tr. 25:23–26:19.

A review of the intrinsic evidence supports our preliminary construction of "reflecting walls." We first look to the language of claim 1, which, in pertinent part, recites "a plurality of reflecting walls formed over the light-sensitive elements." Ex. 1001, 10:11–12; *see also id.* at 11:1–2 (claim 10, substituting "provided" for "formed" but otherwise identical). Beyond recitations relating to being opposed to each other and displaced relative to "a center of the aperture," the independent claims do not further define the shape or configuration of the "reflecting walls." Dependent claims 3 and 12 recite that "a vertical cross section of the reflecting wall is a trapezoid whose upper base is longer than a lower base." *Id.* at 10:38–40

(claim 3), 12:7–9 (claim 12). No other dependent claim relates to the shape or configuration of the "reflecting walls."

Petitioner cites to the Specification in support of its proposed construction, including that a purpose of the reflecting walls is to: "**reflect[] a portion of light** entering the semiconductor substrate from above onto the aperture on each light-sensitive element." Pet. 11–12 (citing Ex. 1001, 3:2–4, Abstract; Ex. 1002 ¶ 67). Petitioner cites other parts of the Specification that the reflecting walls include vertical surfaces that oppose each other across the aperture. *Id.* at 12 (citing Ex. 1001, 3:4–8, 5:16–23, 5:45–49, Fig. 2A; Ex. 1002 ¶¶ 68–69). Petitioner also points out the reflecting walls are not necessarily "*just* the vertical faces," but "include[] the entire structure that forms the vertical surface," such as in the embodiment of Figure 6, in which the reflecting walls have a trapezoidal cross section, with reflecting surfaces that are "approximately vertical." *Id.* at 13–14 (citing Ex. 1001, 10:38–40 (claim 3), 9:11–16 (describing Fig. 6 as illustrating "a trapezoid whose upper base is longer than the lower base"), Fig. 6 (illustrating the trapezoidal cross section); Ex. 1002 ¶¶ 70–72).

The prosecution history of the '034 patent was made of record in this proceeding by Patent Owner. *See* Ex. 2001. As discussed above, during trial, Patent Owner never argued an alternative construction and necessarily never cited to the prosecution history as relevant to construction of "reflecting walls." Our independent review of the prosecution history does not disclose any argument or claim amendment inconsistent with our preliminary construction from the Institution Decision. *See, e.g.*, Ex. 2001, 18 (amended claim 13 reciting the "reflecting walls" as in claim 1 of the '034 patent).

The claim language and Specification are consistent with our construction of the "reflecting walls" as "structures having approximately vertical surfaces that reflect light." The independent claims do not define the shape of the reflecting walls, and the dependent claims define one particular shape that is consistent with our "approximately vertical" construction. The drawings depict the "reflecting walls" as vertical. *See* Ex. 1001, Figs. 2A–2C, 4A–4B. The trapezoidal cross section embodiment is depicted as having "approximately" vertical walls, consistent with our preliminary construction. *See id.* at Fig. 6.

Accordingly, we maintain our construction of "reflecting walls" from the Institution Decision as the broadest reasonable interpretation.

2. "photoreceiving region" (claims 1, 2, 10, 11)

Petitioner argues the term "photoreceiving region" should be construed as "an array of pixels containing light-sensitive elements." Pet. 11 (citing Ex. 1001, Abstract; Ex. 1002 ¶ 66). Petitioner cites to the Specification for support, which states the following:

> The solid-state imaging device according to the present invention comprises: **a plurality of light-sensitive elements 1 arranged in a matrix form at regular spacings in a photoreceiving region** provided on a semiconductor substrate . . . .

Id. (citing Ex. 1001, Abstract; Ex. 1002 ¶¶ 65–66). In the Institution Decision, we adopted Petitioner's construction of "photoreceiving region" as the broadest reasonable interpretation. Inst. Dec. 10–12.

Neither party disputes our preliminary construction. Thus, we maintain the construction of "photoreceiving region" proposed in the Petition and adopted in the Institution Decision as the broadest reasonable interpretation.

3. "wherein" clause (claim 1)

The wherein clause of claim 1 recites the following:

> wherein the plurality of micro lenses disposed in an inner periphery of the photoreceiving region, and the plurality of reflecting walls corresponding to the micro lenses are disposed such that a center of each of the micro lenses and a center of each of the reflecting walls opposing each other are displaced from a center of the aperture toward a center of the photoreceiving region . . .

Ex. 1001, 10:16–22.

Petitioner argues the "wherein" clause of claim 1 includes two claim elements. Pet. 14–15. Petitioner indicates that "[f]or purposes of this proceeding, [it] applies [Patent Owner's] construction," based on Patent Owner's arguments in the co-pending District Court litigation. *Id.* at 19 (citing "Letter to the Court,"[15] Ex. 1013; Ex. 1002 ¶¶ 82–83). In its Preliminary Response, among other arguments, Patent Owner disagreed that the preceding is its construction because the Letter to the Court was sent for the limited purpose of opposing an early construction procedure by the Court. Prelim. Resp. 11.

In the Institution Decision, we determined no construction of the wherein clause was required beyond the language of the claim itself. Inst. Dec. 13–15. Thus, we applied the plain and ordinary meaning of the "wherein" clause without any express construction. *Id.* at 15. Neither party disputes our preliminary determination. Accordingly, we maintain our determination from the Institution Decision that the wherein clause requires no express construction.

---

[15] Letter dated October 11, 2016, from Patent Owner to the Court in Case No. 15-cv-1094-RGA (*see* Section II.A. above, "Related Proceedings").

B. Alleged Unconstitutionality

Patent Owner objects to the constitutionality of *inter partes* review based on pending review of that issue by the United States Supreme Court. PO Resp. 39–40 (citing *Oil States Energy Servs., LLC v. Greene's Energy Grp., LLC*, No. 16-712 (U.S. Nov. 23, 2016, cert. granted June 12, 2017)). On April 24, 2018, the Supreme Court issued a decision in *Oil States* determining that *inter partes* review is constitutional and does not violate Article III or the Seventh Amendment. *Oil States Energy Servs., LLC v. Greene's Energy Grp., LLC*, 138 S. Ct. 1365, 1379 (2018). Patent Owner's objection is moot.

C. Grounds Based on Anticipation

1. Law of Anticipation

In order for a prior art reference to serve as an anticipatory reference, it must disclose every limitation of the claimed invention, either explicitly or inherently. *In re Schreiber*, 128 F.3d 1473, 1477 (Fed. Cir. 1997). Anticipation "requires that every element and limitation of the claim was previously described in a single prior art reference, either expressly or inherently, so as to place a person of ordinary skill in possession of the invention." *Sanofi-Synthelabo v. Apotex, Inc.*, 550 F.3d 1075, 1082 (Fed. Cir. 2008) (citing *Schering Corp. v. Geneva Pharms., Inc.*, 339 F.3d 1373, 1379 (Fed. Cir. 2003); *Cont'l Can Co. USA v. Monsanto Co.*, 948 F.2d 1264, 1267–69 (Fed. Cir. 1991)).

As the Federal Circuit has held,

> [t]his modest flexibility in the rule that "anticipation" requires that every element of the claims appear in a single reference accommodates situations where the common knowledge of technologists is not recorded in the reference; that is, where technological facts are known to those in the field of the

> invention, albeit not known to judges. It is not, however, a substitute for determination of patentability in terms of § 103.

Cont'l Can, 948 F.2d at 1268–69.

The elements must be arranged as required by the claim, but identity of terminology is not required. *In re Bond*, 910 F.2d 831, 832 (Fed. Cir. 1990). Furthermore,

> unless a reference discloses within the four corners of the document not only all of the limitations claimed but also all of the limitations arranged or combined in the same way as recited in the claim, it cannot be said to prove prior invention of the thing claimed and, thus, cannot anticipate under 35 U.S.C. § 102.

Net MoneyIN, Inc. v. VeriSign, Inc., 545 F.3d 1359, 1371 (Fed. Cir. 2008). Whether a patent is invalid as anticipated is a two-step inquiry. *See Power Mosfet Tech., LLC v. Siemens AG*, 378 F.3d 1396, 1406 (Fed. Cir. 2004). The first step requires construction of the claims. *Id.* The second step in the analysis requires a comparison of the properly construed claim to the prior art. *Id.*

2. Tomoda Overview (Ex.1003)

Tomoda describes an amplifying solid-state image pickup device that solves the problem of "reduced light gathering rates in the peripheral portion of the imaging area." Ex. 1003, Abstract. Tomoda discloses "shifting of the microlens positions from the optical receivers in the peripheral portion of the imaging area . . . to reduce shading in the peripheral portion of the output image." *Id.* ¶ 6.

Figure 1 of Tomoda is reproduced below.

FIG. 1

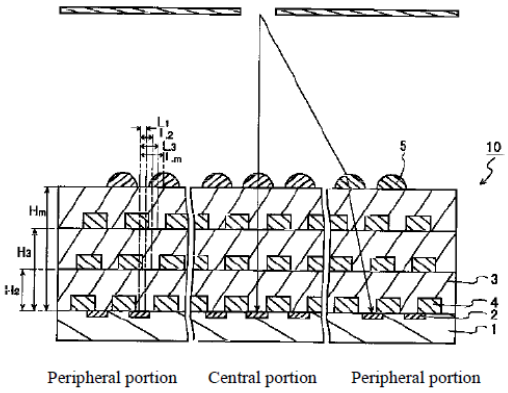

Figure 1 "is a sectional view of an example of the amplifying solid-state image pickup device according to the present invention, showing the structure of the imaging area." Ex. 1003 ¶ 22. Tomoda's solid-state image pickup device includes a plurality of optical receivers 2 and light shielding layers 4 formed on semiconductor substrate 1. *Id.* ¶¶ 10, 23–24. The light shielding layers have an opening formed corresponding to each optical receiver. *Id.* ¶¶ 10, 26. The light shielding layers are stacked on each and with interlayer of insulation film 3 between two light shielding layers 4. *Id.* ¶¶ 10, 27.

Shading is reduced in several ways. Ex. 1003 ¶¶ 15–16. Shading is reduced by shifting the centers of the openings in the light shielding layers "from the centers of the corresponding optical receivers in the direction towards the central portion of the imaging area." *Id.* ¶ 15. Shading is further reduced by shifting "the centers of the microlenses from the centers of the corresponding optical receivers." *Id.* ¶ 16. The shifting of the microlenses is larger in the peripheral portions of the imaging area than the central portion of the imaging area. *Id.*

Where "the rays of light incident on the amplifying solid-state image pickup device diverge or converge, it is preferable to shift the centers of the microlenses from the centers of the corresponding optical receivers in the direction in accordance with the optical paths of the incident light." Ex. 1003 ¶ 17. In the case where the rays diverge, the centers of the microlenses are shifted "from the centers of the corresponding optical receivers in the direction towards the central portion of the imaging area." *Id.* ¶ 18. If the rays converge, the centers of the microlenses are shifted "from the centers of the corresponding optical receivers in the direction towards the peripheral portion of the imaging area." *Id.*

Patent Owner and Dr. Afromowitz cite Tomoda's architecture as improving both corner shading and color mixing. PO Resp. 10–11 (citing Ex. 2003 ¶ 34). Patent Owner describes Tomoda as one example of "shifting the micro lens and metal circuitry/light shield structures of peripheral pixels a slight bit toward the center of the image sensor so that the oblique rays would propagate more effectively toward the photo diode associated with that pixel." *Id.* at 10 (citing Ex. 2003 ¶ 34).

3. Claims 1, 2, 5, 9 – Anticipated by Tomoda (Ground 1)

Petitioner alleges claims 1, 2, 5, and 9 are anticipated by Tomoda. Pet. 20–41. Petitioner cites the Guidash Declaration in support of its positions. *See* Ex. 1002 ¶¶ 87–137. Patent Owner argues that Tomoda does not anticipate any of the listed claims because it does not disclose the claimed "reflecting walls." PO Resp. 27–36.

a. Claim 1

The parties' arguments and supporting evidence directed to claim 1 are summarized below, followed by our discussion and conclusion.

(1) Petitioner's Arguments and Supporting Evidence

The preamble of claim 1, limitation 1[a] in the Petition, recites "[a] solid state imaging device comprising." Petitioner cites to Tomoda as disclosing a "solid-state image pickup device." Pet. 22 (citing Ex. 1003 ¶ 10; Ex. 1002 ¶ 91).

Limitation [1b] recites "a semiconductor substrate." Tomoda's solid-state imaging device is formed on a semiconductor substrate. Ex. 1003 ¶ 10. Petitioner relies on the preceding disclosure and the Guidash Declaration. Pet. 22–23 (citing Ex. 1002 ¶ 92).

Limitation [1c] recites "a photoreceiving region provided on the semiconductor substrate." Petitioner cites to Tomoda's optical receivers, which are formed in the semiconductor substrate and are for "light gathering." Pet. 23 (citing Ex. 1003 ¶¶ 3, 10). Petitioner cites the Guidash Declaration for its explanation that the optical receivers are light sensitive elements defining an imaging area. *Id.* (citing Ex. 1002 ¶¶ 93–94).

Limitation [1d] recites "a plurality of light-sensitive elements provided in the photoreceiving region." Petitioner references its showing on limitation [1c] and the Guidash Declaration to show limitation [1d]. Pet. 23 (citing Ex. 1002 ¶ 95).

Limitation [1e] recites "a plurality of apertures, which are provided over the light-sensitive elements, for delivering an incident light to the light-sensitive elements." Tomoda discloses "a plurality of openings" in light shielding layers above the "optical receivers." Ex. 1003, Abstract. Petitioner contends that the claimed "apertures" are disclosed by the "openings" and the claimed "light-sensitive elements" are Tomoda's "optical receivers." Pet. 23–24. Tomoda also describes that, in the case of

incident light, the centers of the openings are shifted "from the centers of the corresponding optical receivers in the direction in accordance with the optical paths of the incident light." Ex. 1003 ¶ 14. Petitioner cites to the preceding disclosures, an annotation of Figure 1 of Tomoda illustrating how incident light is delivered to the optical receivers, and the Guidash Declaration to show the limitation. Pet. 23–25 (citing Ex. 1002 ¶¶ 93–94).

Limitation [1f] recites "a plurality of reflecting walls formed over the light-sensitive elements and the apertures so as to oppose each other across the apertures." Referencing its showing in connection with limitation 1[e], Petitioner argues "the openings in Tomoda's lowest light shielding layer correspond to the '034 patent's apertures." Pet. 25–26 (citing Ex. 1002 ¶ 99). More specifically, Petitioner maps Tomoda to the limitation using a first annotation of Figure 1, reproduced below.

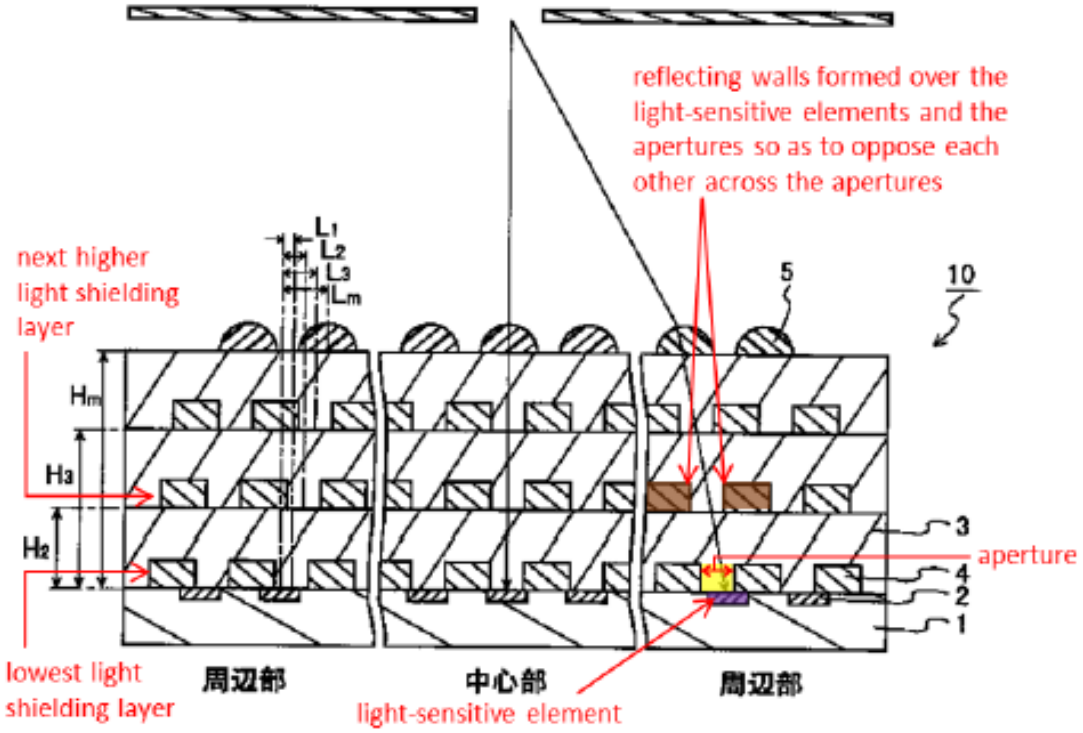

Petitioner's First Annotation of Tomoda Figure 1

Pet. 27. According to Petitioner, first annotation of Figure 1 illustrates "the walls of these openings are approximately vertical surfaces of structures (one pair of which is highlighted brown) **that are formed over the light-sensitive elements and the apertures so as to oppose each other across the apertures**." *Id.* at 26 (citing Ex. 1002 ¶¶ 99–100). Petitioner also argues that the vertical surfaces of Tomoda would reflect light. *Id.* at 27–28 (citing Ex. 1003 ¶¶ 45–46 (disclosing the light shielding layer is aluminum or tungsten and the interlayer insulation is silicon oxide); Ex. 1002 ¶¶ 102–103).

According to Petitioner, "one of ordinary skill would have understood 'silicon oxide' in this context to refer to SiO_2, and tungsten will reflect light with respect to SiO_2" and, accordingly, that the vertical surfaces of the openings of Tomoda would reflect light. Pet. 28 (citing Ex. 1002 ¶¶ 104–105). In support of this conclusion, Petitioner points out that the '034 patent discloses the same materials, tungsten and silicon oxide, as Tomoda, which "indicates that the walls of the openings in Tomoda's light shielding layer would have the same reflective properties as the '034 patent's reflecting walls." *Id.* at 28–29 (citing Ex. 1001, 5:56–62, Figs. 2A–2C; Ex. 1002 ¶ 106). Petitioner also contends that the "light shielding layers are 66–80% of the thickness of the interlayer insulation film" and thus "have a vertical surface area sufficient to reflect a substantial amount of light." *Id.* at 29 (citing Ex. 1003 ¶¶ 25–27; Ex. 1002 ¶¶ 107–108).

Petitioner explains through the Guidash Declaration and another annotation of Figure 1 of Tomoda that "the vertical orientation of the walls of the openings in Tomoda's light shielding layer indicates that at least some of the light reflected by the walls would be reflected onto the aperture below

that pair of walls and, ultimately, onto the light sensitive elements." Pet. 29 (citing Ex. 1002 ¶ 109). Petitioner's second annotation of Figure 1 is reproduced below.

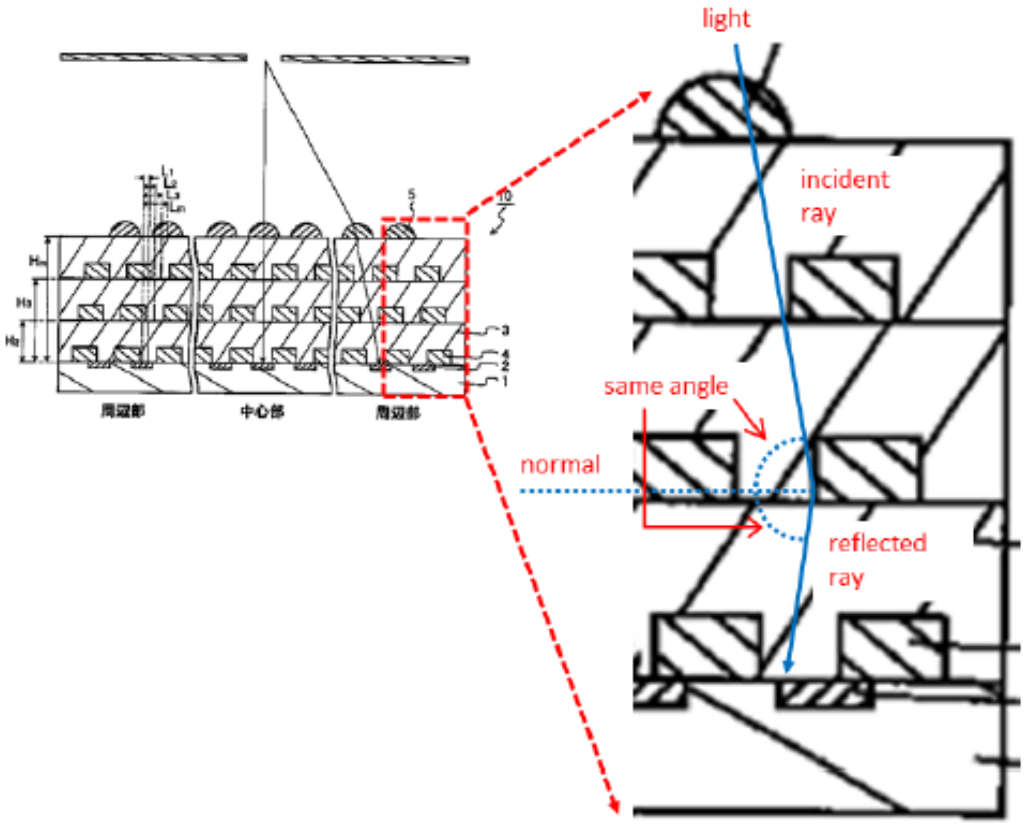

Petitioner's Second Annotation of Tomoda Figure 1

Id. at 31. The second annotation of Tomoda's Figure 1 includes a blue arrow showing a ray of light. *Id.* at 30. Petitioner relies on the Guidash Declaration to explain that the ray of light is "incident on Tomoda's reflecting walls" and reflects at the same angle as the angle of incidence onto the photodiode. *Id.* (citing Ex. 1002 ¶ 110).

Limitation [1g] recites "a plurality of micro lenses provided over the reflecting walls and the apertures." Tomoda discloses microlenses on the insulation film corresponding to the optical receivers. Ex. 1003 ¶ 28.

Petitioner cites to paragraph 28 of Tomoda and Figure 1 as meeting the limitation. Pet. 36–37.

Limitation [1h] recites

> wherein the plurality of micro lenses disposed in an inner periphery of the photoreceiving region, and the plurality of reflecting walls corresponding to the micro lenses are disposed such that a center of each of the micro lenses and a center of each of the reflecting walls opposing each other are displaced from a center of the aperture toward a center of the photoreceiving region, and
>
> an amount of displacement between the center of the photoreceiving region and the center of the reflecting walls is smaller than that of displacement between the center of the photoreceiving region and the center of the micro lens.

Petitioner applies Patent Owner's construction from Patent Owner's Letter to the Court. *See* Pet. 32–34 (citing Ex. 1013).

Petitioner references its showings regarding limitation 1[e] above that the openings in the light shielding layer correspond to the recited apertures. Pet. 34 (citing Ex. 1002 ¶ 119). Further, Petitioner references the showing made in connection with limitation 1[c] that Tomoda's "imaging area" is the recited "photoreceiving region." *Id.* (citing Ex. 1002 ¶ 119).

As to the recited displacement of the micro lenses, Tomoda teaches "it is preferable to shift the centers of the microlenses from the centers of the corresponding optical receivers in the direction towards the central portion of the imaging area." Ex. 1003 ¶ 18; Pet. 34. Petitioner cites to the preceding and to paragraph 30 of Tomoda as "indicating the components are shifted this way in pixels located in the 'peripheral portion of the imaging area.'" Pet. 34 (citing Ex. 1002 ¶¶ 117–118).

As to the recited reflecting walls, Petitioner cites to Tomoda's disclosure that "it is preferable to shift the centers of the openings [in the light shielding layers] from the centers of the corresponding optical receivers in the direction towards the central portion of the imaging area." Pet. 35 (quoting Ex. 1003 ¶ 15) (alterations in Petition). Petitioner cites to the preceding and to paragraph 30 of Tomoda as "indicating the components are shifted this way in pixels located in the 'peripheral portion of the imaging area.'" *Id.* (citing Ex. 1002 ¶ 120).

Petitioner's third annotation of Figure 1 of Tomoda is reproduced below.

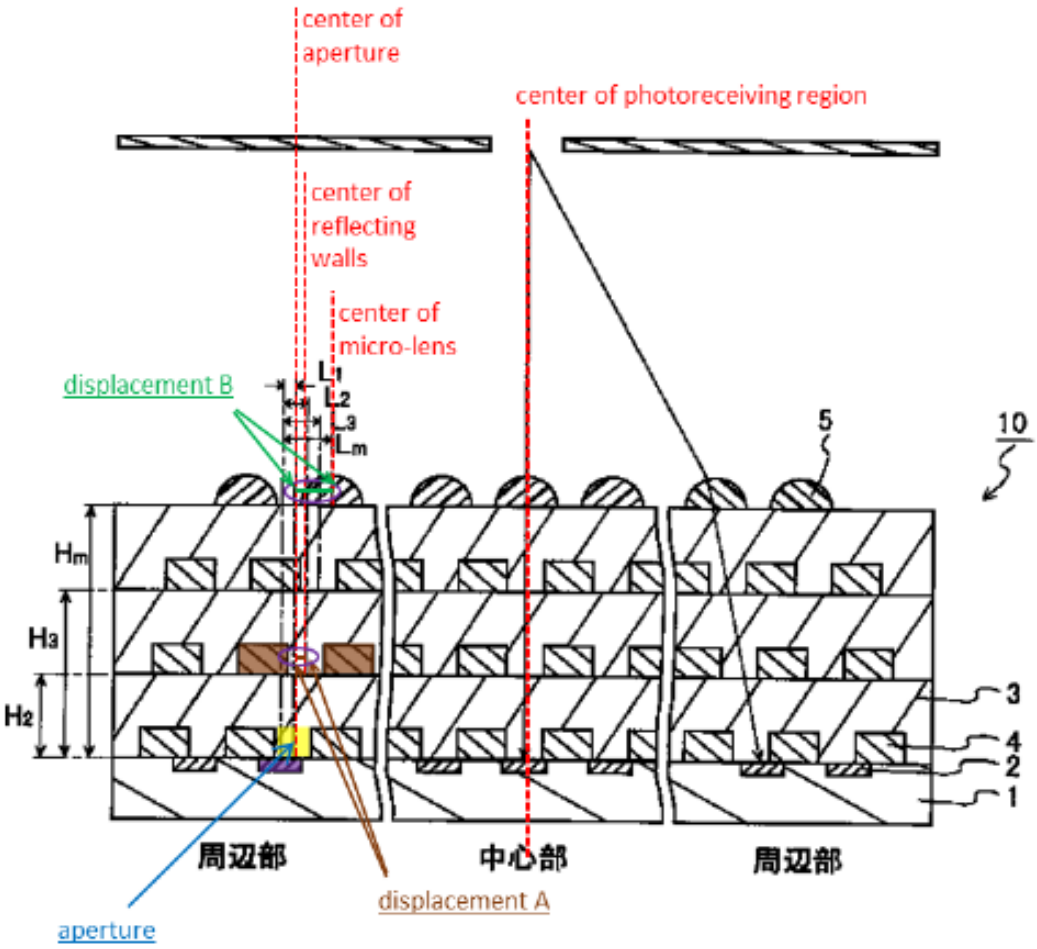

Petitioner's Third Annotation of Tomoda Figure 1

Pet. 36. Petitioner's third annotation of Figure 1 shows the pixel reflecting walls in brown and the aperture in yellow. *Id.* (citing Ex. 1002 ¶ 122). The third annotated Figure 1 identifies the displacement between the center of the aperture and the center of the reflecting walls as "displacement A" and the displacement between the center of the aperture and the center of the micro lens as "displacement B." *Id.* at 36–37 (Ex. 1002 ¶ 122).

Tomoda is also cited by Petitioner for disclosure that "**shifting of the microlenses 5 (Lm) is set so as to be larger than the shifting of the openings formed in the uppermost light shielding layer** from the same optical receivers (excluding the optical receiver in the center of the imaging area)." Pet. 37–38 (citing Ex. 1003 ¶¶ 33–39; Ex. 1002 ¶ 123). With reference to the third annotated Figure 1, Petitioner argues "the openings in the second light shielding layer ('L2') correspond to the vertical surfaces of the reflecting walls; and the shifting is toward the CPRR[16]." *Id.* at 38 (citing Ex. 1002 ¶ 123).

(2) Patent Owner's Arguments and Supporting Evidence

Patent Owner's arguments that Tomoda does not anticipate are based on the allegation that the reference does not have the claimed "reflecting walls" and that Petitioner's "argument is only enabled because Tomoda's figures are inaccurate as to the relative vertical and horizontal dimensions depicted." *See* PO Resp. 30 (citing Ex. 2003 ¶ 88). Patent Owner argues also that our construction of "reflecting walls" is overly broad. *Id.* In addition, Patent Owner argues that the fact that Tomoda's light shielding layers are made of reflective metal, such as "aluminum, tungsten, or the

[16] Acronym for "center of the photoreceiving region." Pet. 15.

like" (*id.* (quoting Pet. 28; Ex. 1002 ¶ 28)), does not "transform the light shielding layers into reflecting walls." *Id.* (citing Ex. 2003 ¶ 68).

Patent Owner cites the Afromowitz Declaration, discussing typical pixel widths at the time of Tomoda as providing a "much more accurate sense of [] Tomoda's dimensions." PO Resp. 31 (citing Ex. 2003 ¶ 88); *see also id.* (redrawn Tomoda Fig. 1 using dimensions from the Afromowitz Declaration). Patent Owner argues that using accurate thicknesses for the light shields shows that it "doesn't make much sense" to consider using the light shields to reflect light. *Id.*

In order to make its point that the light shielding layers do not reflect light, Patent Owner criticizes Mr. Guidash's calculations that the light shielding layers are 66–80% of the thickness of the interlayer insulation film. PO Resp. 32 (citing Ex. 1002 ¶¶ 107–108; Ex. 2003 ¶ 68); *see also* Pet. 29 (relying on Guidash Declaration, Petitioner argues light shielding layers have "vertical surface area sufficient to reflect a substantial amount of light."). Although it does not disagree with Mr. Guidash's calculations, Patent Owner contends that various factors, like electrical conductivity and cost, would have led a person of ordinary skill to design the light shielding layer of Tomoda with a minimum thickness. PO Resp. 32 (citing Ex. 2003 ¶ 69). Patent Owner then addresses the thickness of the interlayer, which is also dependent on design factors including planarization and insulation requirements. *Id.* (citing Ex. 2003 ¶ 69).

According to Patent Owner, using the extremes of Tomoda's range of thickness of the two layers, 100 nm as the thinnest light shielding layer and 1200 nm for the thickest interlayer, results in a ratio where the light shielding layer is only 8.33% of the interlayer. PO Resp. 33. Alternatively,

using preferred thicknesses from Tomoda would result in a ratio between the light shielding layer and interlayer of 40%.[17] *Id.* (citing Ex. 2003 ¶ 69; Ex. 1002 ¶¶ 107–108). Patent Owner concludes the Guidash Declaration misrepresents Tomoda's ranges which "depend on assumptions that are neither disclosed, nor inherent, in Tomoda." *Id.* (citing Ex. 1002 ¶¶ 107–108; Ex. 2003 ¶ 69).

Patent Owner further contends that "Petitioner identifies the 'openings' in the light shielding layers as the claimed reflecting walls." PO Resp. 33 (citing Pet. 20). According to Patent Owner, Tomoda is "designed to focus light from its lens on to the photodiode directly and expressly avoids incident light contact with its light shielding layer 4." *Id.* at 33–34 (citing Ex. 2003 ¶¶ 85–86 (citing Ex. 1003 ¶¶ 7–8)); *see also id.* ¶ 86 (drawing of unreflected yellow light ray in Tomoda impinging the photodiode).

(3) Discussion

Patent Owner's evidence and argument principally assert that Tomoda's light shielding layers were not *intended* to reflect light. *See* PO Resp. 36 (citing Ex. 2003 ¶¶ 80, 84, 91); Tr. 29:10–30:2. Even assuming Tomoda does not expressly disclose the use of the light shielding layers to reflect light, the absence of a disclosure relating to a preferred function does not preclude a determination of anticipation. *In re Schreiber*, 128 F.3d at

---

[17] How this percentage is derived is not specified precisely. Working backwards from the percentage suggests it is the ratio of the preferred thinnest light shielding layer (400 nm) to the preferred thickest interlayer (1000 nm). *See* PO Resp. 33; Ex. 2003 ¶ 69 (citing Ex. 1003 ¶ 25 ("The thickness of each light shielding layer 4 is . . . preferably ***400***–800 nm." (emphasis added)); *id.* ¶ 27 ("The thickness of each interlayer insulation film 3 is . . . 600–***1000*** nm.") (emphasis added)).

1477 (finding a funnel for dispensing oil anticipated a popcorn dispenser of the same shape). "It is well settled that the recitation of a new intended use for an old product does not make a claim to that old product patentable." *Id.* (citations omitted). If a claimed structure is already known, the claim to that structure is unpatentable regardless of whether the structure has ever been used in a heretofore unknown manner.

We find that the structure of Tomoda is the same as that recited in claim 1, and therefore is anticipated by Tomoda. This finding is supported by evidence that both claim 1 and Tomoda are directed to a "solid state imaging device." *Compare* Ex. 1001, 10:2 (claim 1), *with* Pet. 22 (citing Ex. 1003 ¶ 10 ("solid-state image pickup device")). Regardless of the ratio of the light shielding layer's thickness to that of the insulation layer, there is substantial evidence that the light shielding layers would reflect light. We credit the testimony of Mr. Guidash that Tomoda teaches vertical surfaces, i.e., the light shielding layers, that "would **reflect light**." Pet. 27 (citing Ex. 1002 ¶ 102).

In finding that the light shielding layer of Tomoda reflects light, we credit the Guidash Declaration, which is unrebutted by the Afromowitz Declaration on this point. The Afromowitz Declaration states that a person of ordinary skill would have understood that

> *an image sensor is preferably designed so that light collected* by the micro lens would propagate through the structure to the photo diode *without encountering any obstacles*. Obstacles that prevent light from reaching the photo diode reduce the sensitivity of the image sensor. Therefore, *one would design the light shielding layers* to protect the sensitive electronics, and provide

> electrical connections within the MOS circuit, but *not interfere with the passage of light from the micro lens to the photo diode*.

Ex. 2003 ¶ 86 (emphases added). The Afromowitz Declaration does not assert that the light shielding layers of Tomoda do not reflect light. In Dr. Afromowitz's deposition testimony, he agreed that the light shielding layers of Tomoda would constitute reflecting walls based on our preliminary, and now final, construction of "reflecting walls." Ex. 1020, 131:2–22; Pet. Reply 24–25. Dr. Afromowitz "acknowledged, light entering the microlens of any semiconductor image sensor (including that of the '034 patent) will be directed at [a] variety of angles that will cause the light to interact with the light-shielding layers." Pet. Reply 21–22 (citing Ex. 1020, 100:23–101:18, 112:19–23). Patent Owner concedes that its position is that Tomoda does not expressly state that the light shielding layers reflect light, although it is possible that they do. Tr. 30:13–31:5.

Contrary to Patent Owner's contention about Tomoda's openings forming the reflecting walls (PO Resp. 33), Petitioner identifies the walls forming the openings in the light shielding layer as forming the vertical surfaces of the claimed reflecting walls. Pet. 26 (citing Ex. 1002 ¶¶ 99–100). As noted above, Dr. Afromowitz does not testify these vertical surfaces of the light shielding layers would not reflect light. Neither is there any dispute that the materials from which Tomoda's light shielding layers are made, metals including aluminum, tungsten, or the like, including silicon dioxide, are reflective. *See id.* at 28 (citing Ex. 1003 ¶¶ 45–46; Ex. 1002 ¶¶ 103–105). Furthermore, the '034 patent teaches the same materials, tungsten and silicon oxide for the reflecting walls. Ex. 1001, 5:56–62, Figs. 2A–2C; Ex. 1003 ¶¶ 45–46; *see* Pet. 28–29; Ex. 1002 ¶ 106. Properly construed, the

light shielding layers, which include approximately vertical surfaces that reflect light, disclose the claimed reflecting walls. *See Beachcombers v. WildeWood Creative Prods., Inc.*, 31 F.3d 1154, 1160 (Fed. Cir. 1994) (anticipation requires a first step of properly interpreting the claims and a second step of determining whether the limitations of the claims, as properly interpreted, are met by the prior art). We find that, under our construction of "reflecting walls," Tomoda discloses the structure of the claimed reflecting walls. *See* Pet. 26 (citing Ex. 1002 ¶¶ 99–100).

As discussed above, the light shielding layers have the same structure and perform the same function, reflecting light (in addition to light shielding), as the recited "reflecting walls." Patent Owner's argument that Tomoda is intended to deal with only light that strikes directly onto the photodiode, i.e., Tomoda's "optical receivers" (*see* PO Resp. 33–34) is not supported in the cited paragraphs 7 and 8 of Tomoda. Patent Owner acknowledges paragraphs 7 and 8 are directed to the shading problem. *Id.* at 34. Paragraphs 85 and 86 of the Afromowitz Declaration, also relied on by Patent Owner for its assertion, do not mention either paragraph 7 or 8 of Tomoda. Paragraph 12 of Tomoda is cited by Dr. Afromowitz for its disclosure that the openings are shifted to "reduce the incident light blocked by the light shielding layers." Ex. 2003 ¶ 85 (citing Ex. 1003 ¶ 12). We agree with Petitioner that Patent Owner and Dr. Afromowitz have "effectively admitted that Tomoda's metal light shielding layers 4 would act as reflectors." *See* Pet. Reply 14–15 (citing PO Resp. 39; Ex. 2003 ¶ 94); *see also* Tr. 31:18–32:11 (Patent Owner acknowledging that Tomoda anticipates under our preliminary, and now final, construction of "reflecting walls").

As noted above, in its analysis, Petitioner applies a proposed construction of limitation [1h] that is based on Patent Owner's Letter to the Court in the co-pending District Court litigation. *See* Pet. 32–34 (citing Ex. 1013). With respect to Petitioner's showing regarding limitation [1h], we determined that the plain and ordinary meaning applies to the limitation. *See* Section III.A.3 above. We do not see, nor does Patent Owner argue, that the construction Petitioner uses varies in any material way from the plain and ordinary meaning of this claim language.

b. Claims 2, 5, 9

Claims 2, 5, and 9 depend from claim 1. We have reviewed Petitioner's evidence and argument on Tomoda regarding these claims, as well as the cited portions of the Guidash Declaration. Pet. 38–41. Patent Owner relies on the same arguments and evidence, including the Afromowitz Declaration, for patentability already addressed above in connection with claim 1. PO Resp. 36–37. Petitioner's argument and supporting evidence is summarized below.

Claim 2 depends from claim 1 and is reproduced below.

> 2[a]. The solid-state imaging device according to claim 1, wherein the greater a distance from the center of the photoreceiving region becomes, the greater an amount of displacement between the center of the photoreceiving region and the center of the reflecting walls is, and
>
> [2b] the greater an amount of displacement between the center of the photoreceiving region and the center of the micro lens is.

For limitation 2[a], Petitioner cites, among other things, to Tomoda's disclosure of "**shifting of the openings from the optical receivers 2 is set so as to gradually increase from the central portion to the peripheral**

portion of the imaging area." Pet. 39 (citing Ex. 1003 ¶¶ 31–32, Fig. 1; Ex. 1002 ¶ 127). Petitioner contends "this teaches that the greater a distance from the CPRR becomes, the greater an amount of displacement between the center of the aperture and the center of the reflecting walls is." *Id.* at 40 (citing Ex. 1002 ¶ 128).

For limitation [2b], Petitioner cites the same disclosure from paragraphs 31 through 32 of Tomoda. Pet. 40. Petitioner then cites testimony from the Guidash Declaration that "the greater a distance from the CPRR becomes, the greater an amount of displacement between the center of the aperture and the center of the micro lens is." *Id.* (citing Ex. 1002 ¶ 129).

Claim 5 depends from claim 1 and recites "[t]he solid-state imaging device according to claim 1, wherein the reflecting walls are composed of metal." Tomoda discloses that for "the first light shielding layer, a metal, for example, aluminum, tungsten, or the like can be used" to "form plural light shielding layers." Ex. 1003 ¶¶ 45–46. Petitioner argues claim 5 is therefore disclosed, noting that the light shielding layers are the recited reflecting walls, all of which is confirmed by the Guidash Declaration. Pet. 41 (citing Ex. 1002 ¶ 132).

Claim 9 depends from claim 1 and recites "[t]he solid-state imaging device according to claim 1, wherein the solid-state imaging device is a MOS type solid-state imaging device." Petitioner points to Tomoda's disclosure of an amplifier circuit including a "plurality of MOS transistors." Pet. 41 (citing Ex. 1003 ¶ 21). Petitioner concludes by citing the Guidash Declaration that a MOS transistor is a solid-state imaging device. *Id.* (citing Ex. 1002 ¶¶ 136–137).

c. Summary

Petitioner's argument and evidence show by a preponderance of the evidence that claims 1, 2, 5, and 9 are anticipated by Tomoda.

D. Grounds Based on Obviousness

1. Legal Standard for Obviousness

A patent claim is invalid as obvious if the differences between the claimed subject matter and the prior art are "such that the subject matter as a whole would have been obvious at the time the invention was made to a person having ordinary skill in the art to which said subject matter pertains." 35 U.S.C. § 103(a).

> The ultimate determination of obviousness is a question of law, but that determination is based on underlying factual findings . . . . The underlying factual findings include (1) "the scope and content of the prior art," (2) "differences between the prior art and the claims at issue, (3) the level of ordinary skill in the pertinent art," and (4) the presence of secondary considerations of nonobviousness such "as commercial success, long felt but unsolved needs, failure of others," and unexpected results.

In re NuVasive, Inc., 842 F.3d 1376, 1381 (Fed. Cir. 2016) (citing *inter alia Graham v. John Deere Co.*, 383 U.S. 1, 17–18 (1966)).

"To satisfy its burden of proving obviousness, a petitioner cannot employ mere conclusory statements. The petitioner must instead articulate specific reasoning, based on evidence of record, to support the legal conclusion of obviousness." *In re Magnum Oil Tools Int'l, Ltd.*, 829 F.3d 1364, 1380 (Fed. Cir. 2016). Furthermore, in assessing the prior art, the Board must consider whether a person of ordinary skill would have been motivated to combine the prior art to achieve the claimed invention. *NuVasive*, 842 F.3d at 1381. The Supreme Court has explained that

> it can be important to identify a reason that would have prompted a person of ordinary skill in the relevant field to combine the elements in the way the claimed new invention does. This is so because inventions in most, if not all, instances rely upon building blocks long since uncovered, and claimed discoveries almost of necessity will be combinations of what, in some sense, is already known.

KSR Int'l Co. v. Teleflex Inc., 550 U.S. 398, 418–419 (2007).

2. Person of Ordinary Skill in the Art

Petitioner asserts

> one of ordinary skill would have had a Bachelor's degree in electrical engineering, chemical engineering, microelectronics engineering, physics, or material science and approximately 3–5 years of industrial experience with solid-state imaging devices or equivalent research or teaching experience, or a Master's degree in the same fields and 1–3 years of industrial experience with solid-state imaging devices or equivalent research or teaching experience.

Pet. 20 (citing Ex. 1002 ¶¶ 46–57). We adopted Petitioner's proposed level of ordinary skill in the Institution Decision. Inst. Dec. 28. Patent Owner agrees with Petitioner's proposal. PO Resp. 21. We maintain our prior determination here.

3. Overview of the Prior Art

The prior art relied on in the Petition is listed in Section II.D above and described in further detail below.

a. Tomoda (Ex. 1003)

Tomoda is discussed in Section III.C.2 above.

b. Abe (Ex. 1005)

Abe is a solid-state imaging device including a first light shielding film covering transfer electrodes and providing openings directly above the

sensor parts 6 for blocking incident light on anything other than the sensor parts. Ex. 1005, Abstract. The imaging device includes both the first and second light shielding film formed on faces of extended portions. *Id.*

Figure 3 of Abe is reproduced below.

FIG. 3

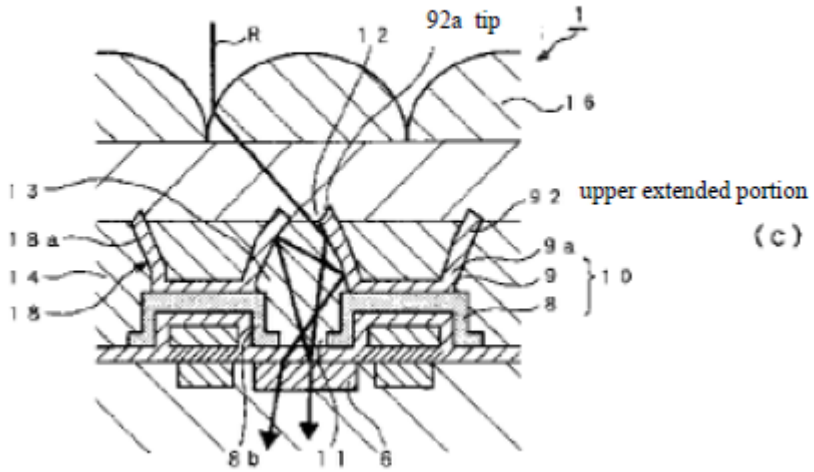

Figure 3 is a sectional view of a first variation of the described invention. Ex. 1005 ¶ 44. As shown in Figure 3, the upper extended portions 92 "incline upwardly from the upper ends of the lateral faces 9a of the second light shielding film 9." *Id.*

c. Kimura (Ex. 1007)

Kimura describes a solid-state image sensor including among other things, a photo-receiving sensor and a light shielding structure on a substrate. Ex. 1007, Abstract. Convex and concave intralayer lenses are positioned between light shielding walls. *Id.* ¶ 17. The intralayer lenses are both formed to be positioned directly above the photoreceiving sensors to condense light into openings of the light shielding film. *Id.* The light shielding walls reflect incident light. *Id.* ¶ 22. The sensor includes a color filter layer and on-chip lenses formed on the color filter layer. *Id.* ¶ 18.

d. Aoki (Ex. 1017)

Aoki teaches a solid-state image sensor "constructed to allow for total internal reflection of the oblique incident light." Ex. 1017, Abstract. A cap layer has a refractive index higher than a low refractive index layer. *Id.* ¶ 17. Thus, "the oblique incident light 112 entering at an incident angle . . . is reflected by the interface between the low refractive index layer 107 and the cap layer 108, and enters the photoelectric converter 102 to contribute to photoelectric conversion." *Id.* at Abstract, ¶ 17. Light at the interface of the layers directed into the photodiode via "total internal reflection." *Id.* ¶ 33.

e. Kuroiwa (Ex. 1009)

Kuroiwa discloses a solid-state imaging device that employs first and second sets of microlenses. Ex. 1009, Abstract. The first and second sets of microlenses each have a different central axis. *Id.* ¶ 23. Both central axes are displaced from a central axis of photoreceiver openings towards a peripheral portion of the chip of the solid-state image sensor. *Id.* Thus, incident light on the second microlenses enters the photoreceiver openings through the first microlenses. *Id.*

4. Claims 3 and 8 – Obviousness Over Tomoda and Abe (Ground 2)

Petitioner alleges claims 3 and 8 would have been obvious over Tomoda and Abe. Pet. 41–48. Petitioner cites the Guidash Declaration in support of its positions. *See* Ex. 1002 ¶¶ 138–160. Except as discussed below, Patent Owner relies on the same arguments and evidence, including the Afromowitz Declaration, for patentability already addressed above in connection with claim 1. PO Resp. 36–37.

a. Claim 3

Claim 3 depends from claim 1 and recites "wherein a vertical cross section of the reflecting wall is a trapezoid whose upper base is longer than a lower base."

(1) Petitioner's Argument and Supporting Evidence

Petitioner cites to Abe to teach the additional limitation over claim 1 that the "cross section of the reflecting wall is a trapezoid." Pet. 42. Abe is similar to Tomoda in disclosing a solid-state imaging device that "deals with oblique light by shifting the position of reflecting walls." *See id.* (citing Ex. 1005 ¶¶ 52–56, 62, Fig. 8; Ex. 1002 ¶¶ 140–141).

Petitioner supports its position with an annotation of Figure 3 of Abe, at page 44 of the Petition, which is reproduced below.

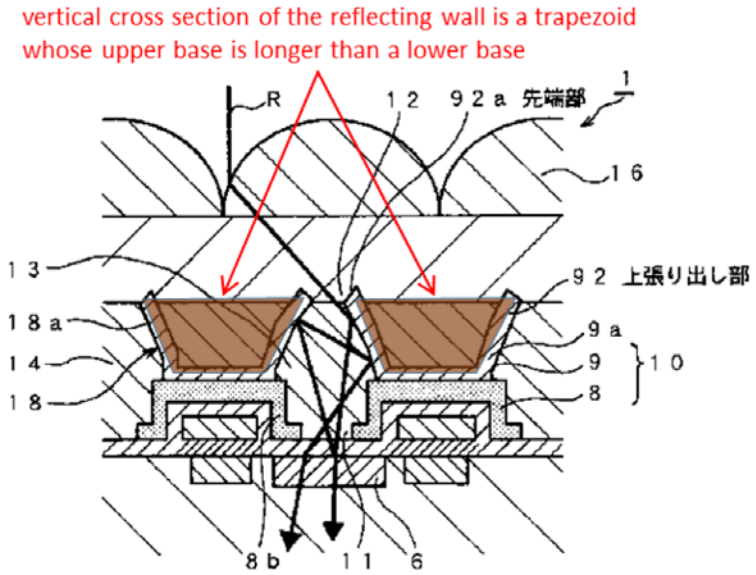

Petitioner's Annotation of Abe Figure 3

Petitioner's annotation of Figure 3 of Abe is a cross section of the solid-state image sensor with a pair of alleged trapezoidal reflecting walls highlighted in brown. *Id.* at 43 (citing Ex. 1005 ¶ 44; Ex. 1002 ¶ 143). Here, Petitioner has identified, through its annotations, what it contends are the boundaries of

Abe's trapezoidal reflecting wall, namely, the lateral faces of light shielding film 9, the bottom surface of light shielding film 9, and the top surface of second insulating film 14 within the interior of light shielding film 9.[18] *See id.* at 44 (citing Ex. 1005 ¶ 38 (describing Fig. 1); Ex. 1002 ¶ 39). In conjunction with Figure 1, which is applicable to Figure 3, Petitioner cites to the following from Abe:

> Thus, the oblique light entering the opening 13, even if it is reflected by the lateral faces 8b of the first light shielding film 8, the lateral faces 9a of the second light shielding film 9, or the lower extended portions 81 to travel towards outside, it is readily reflected by the upper extended portions 91 instead of exiting the opening 13.

Pet. 44–45 (quoting Ex. 1005 ¶ 38; citing *id.* ¶ 44 ("upper extended portions 92 may be extended so as to incline upwardly from the upper ends of the lateral faces 9a of the second light shielding film 9")); *see also* Ex. 1002 ¶¶ 145–146 (explaining that the paragraph 38 description of the upper extended portions 91 is applicable to the upper extended portions 92 shown in Figure 3 and described in paragraph 44). Abe teaches that "upper extended portions 92 may be extended so as to incline upwardly from the upper ends of the lateral faces 9a of the second light shielding film 9," from which Petitioner concludes the reflecting wall is a trapezoid whose upper

[18] We agree with the Dissent that annotations are not evidence. Abe's Figures, however, are evidence. Petitioner's annotations (shading) identify, pictorially (rather than through textual description), the evidence on which it relies, namely, the precise structure in Figure 3 corresponding to the claimed reflecting wall, with a cross section shaped as a trapezoid. We also agree with the Dissent that a trapezoid is a quadrilateral with only one set of parallel sides. We find that Petitioner identifies those four sides in Figure 3 through its annotations.

base is longer than a lower base. Pet. 45 (citing Ex. 1005 ¶ 44; Ex. 1002 ¶ 146).

Petitioner's rationale for the combination is that using "the tapered shape of the vertical surfaces of the walls [disclosed in Abe] would direct a larger percentage of incident ray angles toward the photodiode [in Tomoda's image sensing device], providing the advantage of increased light collecting efficiency (a primary goal of the '034 patent)." Pet. 45 (citing Ex. 1002 ¶ 147). Petitioner further alleges that a person of ordinary skill would have had a reasonable expectation of success in the use of a trapezoidal design for the reflecting walls because performing calculations for angles of reflection for light beams would have been routine for one of ordinary skill. *Id.* at 46 (citing Ex. 1002 ¶ 151). Petitioner argues additionally that the combination would have had the "predictable result of reflecting light into the photodiode, and no unpredictable results." *Id.* Petitioner cites to Abe's teachings of improving peripheral pixel light sensitivity with or without shifting the micro lens. *Id.* (Ex. 1005 ¶¶ 60, 62; Ex. 1002 ¶ 152).

(2) Patent Owner's Argument and Supporting Evidence

Patent Owner repeats its argument that Tomoda does not disclose "a plurality of reflecting walls" (*see* Section III.C.3.a.(2) above) for this and all Grounds 2–7. PO Resp. 36–37. For the reasons stated above, this argument is not persuasive.

Patent Owner also argues Abe was "expressly considered" by the Examiner during prosecution of the '034 patent. PO Resp. 2, *see id.* at 2 n.1

(citing Abe and its U.S. counterpart, Exs. 1006 and 2006[19] respectively), 20–21. Patent Owner notes that during prosecution, claim 3 was recognized as patentable by the Examiner. *Id.* at 3 (citing File History of ’034 patent, Ex. 2001, 54 (Office Action dated August 16, 2005)).

Patent Owner also contends that a person of ordinary skill in the art would not have combined Tomoda’s lenses mounted at an offset position with respect to the aperture of the photodetector (“shifting lenses”) with Abe’s lenses mounted directly above the aperture (“non-shifting lenses”). PO Resp. 3. Specifically, Patent Owner contends that Tomoda’s “shifting lenses” would not solve the problem Abe is directed to. *Id.* According to Patent Owner, the problem Abe solves is “mak[ing] it possible to further efficiently collect the oblique light onto the aperture.” *Id.* at 20 (citing Ex. 2003 ¶ 51). In describing the ’034 patent, Patent Owner points out that “the vertical cross section of the reflecting wall need not be a rectangle, but that ‘preferably, a vertical cross section of the reflecting wall is a trapezoid whose upper base is longer than a lower base.’” *Id.* at 19–20 (citing Ex. 1001, 3:18–19).

At the oral hearing Patent Owner argued Abe does not disclose the subject matter of claim 3 because Abe’s alleged “reflecting wall” is not trapezoidal. Tr. 41:21–42:2. According to Patent Owner, Petitioner relies on Abe’s “U-shaped design or the cup shape or bowl-shaped design of these

[19] U.S. Patent No. 6,246,081, to Hideshi Abe, issued June 12, 2001 (Ex. 2006). That Exhibit 2006 is the United States counterpart to Abe is seen in Exhibit 2006 claiming priority claim priority to Abe (Ex. 1005). *Compare* Ex. 1005 (31), (32), *with* Ex. 2006 (30).

walls." *Id.* at 42:5–8. Patent Owner argues there is no top to Abe's structure and, because it is a cup, it is not a trapezoid. *Id.* at 42:10–15.

(3) Discussion

Patent Owner makes no specific arguments in its Response in this proceeding relative to whether or not Abe shows the subject matter of claims 3 or 12, which recite the same subject matter. Arguments directed to Abe and claims 3 and 12 of the '034 patent were made in the Patent Owner Response in the co-pending '960 IPR. *See* '960 IPR, Paper 16, 34–38; *see also* Tr. 45:18–20 (Patent Owner asserting the arguments are the same for both proceedings and "that Abe is the only reference that petitioner has applied to the limitations of claims 3 and 12."). Petitioner agrees the arguments are similar between the two proceedings and requests that, if Patent Owner's Abe arguments from the '960 IPR are considered here, Petitioner's counter arguments contained in its Reply from the '960 IPR also be considered here. Tr. 48:11–26.

In the interests of efficiency and consistency as between this proceeding and the '960 IPR, as well as under our authority to determine a proper course of conduct in a proceeding and to waive requirements under the rules, we consider Patent Owner's arguments made relative to the Abe combination here. *See* 37 C.F.R. § 42.5(a), (b); *cf. Dell Inc.*, 884 F.3d at 1369 ("*Unless it chose to exercise its waiver authority under 37 C.F.R. § 42.5(b)*, the Board was obligated to dismiss Dell's untimely argument given that the untimely argument in this case was raised for the first time during oral argument." (emphasis added)). We therefore also consider Patent Owner's Response and Petitioner's Reply in the '960 IPR here as it relates to the Abe reference.

We find that Figure 3 of Abe shows a "pair of reflecting walls" (i.e., a "plurality of reflecting walls," as claimed). *See* Pet. 43, 44 (citing Annotation of Figure 3 with walls shown in brown). We agree with Petitioner and find that Abe's description that "upper extended portions 92 may be extended so as to incline upwardly from the upper ends of the lateral faces 9a of the second light shielding film 9" (Ex. 1005 ¶ 44) "describes that the **vertical cross section of the reflecting wall is a trapezoid whose upper base is longer than a lower base**, as seen in Fig. 3." Pet. 45 (citing Ex. 1002 ¶ 146). We find that the entire cup shaped structure, including the material within, is the recited "reflecting wall." *See* Tr. 20:24–25 ("[T]his entire structure [of the embodiment of Figure 5 of the '034 patent] is called reflecting wall"); *see also* Ex. 1001, 8:26–33 (describing formation of reflecting wall 62 (Fig. 5H) as including both W film 121 and Ti film 122).

Based on Figure 3 of Abe, we also find that "oblique light entering the opening 13 . . . is readily reflected by the upper extended portions 91 *instead of exiting the opening 13*." Pet. 44–45 (quoting Ex. 1005 ¶ 38; Ex. 1002 ¶ 144) (emphasis added); *see also* Ex. 1002 ¶¶ 145–146 (explaining that the paragraph 38 description of the upper extended portions 91 is applicable to the upper extended portions 92 shown in Figure 3 and described in paragraph 44).

We are not persuaded by Patent Owner's argument that "light incident on the 'top' of what Petitioner identifies as the claimed 'trapezoidal wall'" (and what Patent Owner characterizes as the "'U'-shaped structure," or as having a cup or bowl shape) "would in fact, reflect off the bottom. *i.e.*, the 'inside' of the bowl." *See* '960 IPR, PO Resp. 37 (citing Ex. 2005, 163:14–164:12). What happens to this light is not relevant to what Abe teaches with

respect to the light entering opening 13 (i.e., the opening between two adjacent reflecting wall structures).[20] In explaining the drawing made by Mr. Guidash at his deposition, and as quoted by Patent Owner, Mr. Guidash testifies "I'm showing it *reflecting back towards the microlens or microlens' region* as a result of impinging on the top of the structure comprising the reflection walls." *Id.* (quoting Ex. 2005, 163:19–23). We find this testimony is consistent with the Guidash Declaration testimony and Abe itself that the lateral faces 9a "reflect light" and that light "is readily reflected by the upper extended portions 91 instead of exiting the opening 13." *See* Ex. 1002 ¶ 144; Ex. 1005 ¶ 38; *see also* Ex. 1005, Fig. 3, ¶¶ 25, 27, 38, 44 (showing light R entering opening 13, reflecting off upper extended portions 92, and through opening 11 to sensor part 6).

We also find that the claimed "reflecting walls" do not require a "uniform composition." *See* '960 IPR, Pet. Reply, 29 (citing '960 IPR, Afromowitz Deposition, Ex. 1020, 130:19–25). Patent Owner argues that the structure identified by Petitioner, "if it were highlighted properly, would be a 'U'-shaped structure —not a trapezoid." '960 IPR, PO Resp. 36. Contrary to Patent Owner's argument, insulating layer 14 of Figure 3 of Abe is part of the trapezoidal structure identified by Petitioner, and we find that

[20] The Dissent faults Petitioner for focusing on Abe's description of light reflecting on lateral faces 9a and not explaining what happens to light incident to the interior of light shielding film 9. Petitioner's focus is to be expected, as the focus of the claims (and the focus of Abe's description) is the behavior of light between opposing faces of adjacent walls, rather than the behavior of light within a wall. Patent Owner does not explain the relevance of whether light reflects on the top of or inside a wall nor do we see such relevance. Thus, Petitioner's failure to discuss it and Abe's failure to describe it are inapposite.

Petitioner does not rely on the insulating layer to teach the reflective properties of the claimed "reflecting walls," but instead relies on the upper extended portions 92 as the "surfaces that reflect light" under our construction. *See* '960 IPR, PO Resp. 35–36; Pet. 44 (citing Ex. 1005 ¶¶ 38, 47; Ex. 1002 ¶¶ 144, 145). As Petitioner notes in its Reply in the '960 IPR (Paper 21, 30), the '034 patent includes the example of Figure 5 in which a wall is formed as a cup-like structure 122 filled with another material 121. Ex. 1001, 8:26–33; *see also* Tr. 20:18–20 (citing Ex. 1001, Fig. 5 showing two different materials in "reflecting walls").

We find that Abe's reflecting surfaces of the trapezoidal shaped reflecting walls are "approximately vertical." *See* Pet. 44. Patent Owner disputes this finding based on the Afromowitz Declaration measuring the extended portions of the trapezoid as 26° off of perpendicular, "with a jog . . . greater than 26°." *See* '960 IPR, PO Resp. 36–37 (citing annotation of Figure 3 at PO Resp. 36 and Ex. 2003 ¶ 82). Accepting Dr. Afromowitz's measurements does not alter our finding. We agree with Petitioner that Patent Owner does not explain why 26° off vertical is not "approximately vertical," as required by our construction of reflecting wall. *See* '960 IPR, Pet. Reply 30–31; *see also* Ex. 1020, 165:5–166:8 (Dr. Afromowitz acknowledging "there is no defined range of angles for verticality"). Given the deposition testimony of Dr. Afromowitz, and absent further explanation on this point, we find that his declaration testimony that 26° is not "approximately vertical" is entitled to little weight.

Abe was cited in an Information Disclosure Statement during prosecution of the application for the '034 patent. *See* Ex. 2001, 7, 29. However, there is no indication, nor does Patent Owner argue, that Abe was

substantively considered during prosecution. *See id.* at 52–54 (finding claim 3 allowable during prosecution without citation to Abe). Patent Owner provides no argument other than noting Abe was cited. Under these circumstances we are not persuaded we should defer to the prior examination of the application for the ’034 patent.[21]

We find that Petitioner has shown a rational basis for combining Tomoda and Abe. *See* Pet. 45 (citing Ex. 1002 ¶ 147). Patent Owner cites to Abe as teaching lens-shifting will “not solve the problems addressed and overcome the serious problems created with the combination.” ’960 IPR, PO Resp. 37–38 (citing Ex. 2006, 2:59–3:4 (“This [lens shifting] method thus **failed** to adequately improve light focusing efficiency.”)). Patent Owner’s argument is not persuasive because, among other reasons, Abe teaches the lens-shifting method “failed to **adequately improve** light focusing efficiency.” *See* ’960 IPR, Pet. Reply 32 (citing Ex. 2006, 3:3–4). Abe is relied on only to the extent of its disclosure of reflecting walls having a “cross section [that] is a trapezoid.” There is nothing in Abe that relates to lens-shifting that would have discouraged the ordinary artisan from modifying Tomoda’s light shielding layers (reflecting walls) to have a trapezoidal cross section as disclosed in Abe.

b. Claim 8

Claim 8 depends from claim 1 and recites “wherein the solid-state imaging device is a CCD type solid-state imaging device.” Petitioner relies on Abe’s teaching of a “CCD-type solid-state image sensor.” Pet. 47 (citing

[21] The same general statement about the prosecution is made with respect to Kuroiwa and Kimura. *See* PO Resp. 20. We do not find that these references were substantively considered during prosecution.

Ex. 1005 ¶ 1; Ex. 1002 ¶ 154). Patent Owner does not separately argue the patentability of claim 8. *See* PO Resp. 36–37.

Petitioner's rationale for the combination is that "the advantages of Tomoda's shifted micro lenses and reflecting walls would be equally applicable in a CCD device," such as that taught in Abe. Pet 47 (citing Ex. 1002 ¶ 155). Petitioner also cites to the commercial advantages of the combination and asserts that a person of ordinary skill would be familiar with and able to design CCD devices with a reasonable expectation of success and predictable results. *Id.* at 47–48 (citing Ex. 1002 ¶ 155). Petitioner also provides a rationale when a CCD image sensor has multiple layers of light shielding as opposed to a single layer, in which case Tomoda explains the openings need not be shifted. *Id.* at 48 (citing Ex. 1003 ¶¶ 5, 11; Ex. 1002 ¶¶ 157–159). Patent Owner does not contest Petitioner's showing and we find the combination of Tomoda and Abe is supported by rational underpinnings.

c. Summary

Petitioner's argument and evidence show by a preponderance of the evidence that claims 3 and 8 would have been obvious over Tomoda and Abe.

5. Claim 4 – Obviousness Over Tomoda and Kimura (Ground 3)

Petitioner alleges claim 4 would have been obvious over Tomoda and Kimura. Pet. 48–52. Petitioner cites the Guidash Declaration in support of its positions. *See* Ex. 1002 ¶¶ 161–176. Patent Owner repeats its argument that Tomoda does not disclose "a plurality of reflecting walls" (*see* Section III.C.3.a.(2) above) for this and all Grounds 2–7. PO Resp. 36–37. Patent Owner also argues Kimura, like Tomoda, does not have "reflecting walls"

and, even if it did, Petitioner has not shown a person having ordinary skill in the art would combine with Tomoda and Kimura. *Id.* at 37.

Claim 4 depends from claim 1 and recites "wherein a color filter is formed on each of the plurality of reflecting walls." Kimura teaches a solid-state image sensing device with reflecting walls to increase light condensing efficiency and prevent color mixing "caused by light entering adjacent pixels." Ex. 1007 ¶¶ 7–8, 12–13; *see* Ex. 1002 ¶ 163. Petitioner alleges "Kimura teaches a color filter (as recited in claim 4 of the '034 patent), and micro lenses both on and between the reflecting walls." Pet. 49 (citing Ex. 1007 ¶¶ 12–18, Fig. 1; Ex. 1002 ¶¶ 164–165). Specifically, Petitioner cites to Kimura's teaching that "[a] **color filter** layer 28 is formed on the passivation film 27 . . . and on-chip lenses 29 are formed on the color filter layer 28." *Id.* (citing Ex. 1007 ¶ 18; Ex. 1002 ¶ 166).

For its showing that the color filter "is formed on each of the plurality of reflecting walls," at page 50 of the Petition, Petitioner cites to an annotation of Kimura's Figure 1, which is reproduced below.[22]

[22] The annotation is excerpted, deleting a comparison to Figure 7 of the '034 patent. We have omitted Figure 7 because our analysis is directed solely to whether Kimura shows the claim limitation.

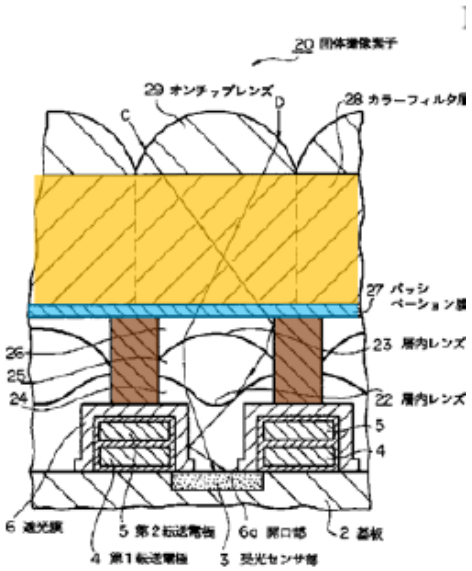

Kimura Fig. 1

Petitioner's Annotation of Kimura Fig. 1

Petitioner's annotation of Figure 1 of Kimura is a cross section of the solid-state image device. *See* Ex. 1007, 6 (describing Figure 1). The annotation illustrates the color filter in orange, reflecting wall in brown, and intervening layer in blue. Pet. 50 (citing Ex. 1002 ¶ 169). The light "shielding wall 21" is not numbered in Figure 1 of Kimura but is depicted in Figure 2 of Kimura (not reproduced herein). *Id.* at 51 (citing Ex. 1007 ¶¶ 25–26, Fig. 2; Ex. 1002 ¶ 170). Petitioner cites to additional teachings of Kimura relative to the "light shielding walls" of Kimura as showing the recited reflective walls. *Id.* (citing Ex. 1007 ¶ 22; Ex. 1002 ¶ 171).

Petitioner's rationale for the combination includes that "[o]ne of ordinary skill would have been motivated to combine Tomoda's image sensor with Kimura's color filter to obtain the advantage of being able [to] capture images in color, a commercially desirable feature." Pet. 51 (citing Ex. 1002 ¶ 173). Petitioner also notes that the '034 patent acknowledges

that color filters were known. *Id.* (citing Ex. 1001, 1:12–2:3, Fig. 8). Petitioner also cites to disclosure from the ’034 patent identifying Kimura as prior art. *Id*. (citing Ex. 1001, 2:2–3; Ex. 1002 ¶ 174). Petitioner alleges a person of ordinary skill would have had a reasonable expectation of success in designing and producing an image sensor with a color filter and would achieve the predictable result of capturing color images. *Id.* at 51–52 (citing Ex. 1002 ¶ 175).

Patent Owner argues Petitioner has not shown how Tomoda’s “light shields” would have been modified with Kimura’s reflecting walls because “Kimura uses a lens structure with a very poor convergence behavior.” PO Resp. 37–38 (citing Ex. 2003 ¶ 92); *see also id.* at 38 (Ex. 1007, Fig. 1, annotated per paragraph 92 of Afromowitz Declaration to show poor convergence of light from spherical or hemispherical micro lenses). Patent Owner argues the combination of Tomoda and Kimura would have increased color bleeding, rather than decrease it as taught by the ’034 patent. *Id.* at 38. Patent Owner supports its color bleeding argument with an annotation of Figure 1 of Tomoda including oblique green and red rays of light. *Id.* at 39 (citing Ex. 2003 ¶ 94).

We are not persuaded by Patent Owner’s argument, which was also made in the Preliminary Response. *See* Prelim. Resp. 25–26. Patent Owner cites the Afromowitz Declaration to further explain its annotation of Tomoda Figure 1. PO Resp. 37–39 (citing Ex. 2003 ¶¶ 93–94); *see also* Inst. Dec. 35–36 (suggesting further explanation of the annotated Figure 1 also produced in the Preliminary Response).

The Afromowitz Declaration explains that Kimura has light shielding walls and intralayer lenses aligned in a vertical direction above the photo

diode. Ex. 2003 ¶ 93. The Afromowitz Declaration also identifies the problem Kimura's structure is intended to resolve, "to increase the light condensing efficiency for the light allowed in at the maximum aperture which is a mixture of parallel and oblique rays." *Id.* (citing Ex. 1007 ¶ 25). According to the Afromowitz Declaration, this problem is not the problem addressed by the '034 patent, i.e., "oblique rays preferentially impinging on the image sensor at pixels on the periphery of the sensor." *Id.* The Afromowitz Declaration concludes with the statement that the "result of combining Kimura's poor lens with Tomoda would likely be as shown below." *Id.* ¶ 94 (referencing the annotated Periphery of Photoreceiving Region of Tomoda Figure 1). Paragraph 94 proceeds to describe the annotation as showing the "likely result," i.e., a "great deal of light bouncing at oblique angles" that "would bleed into adjoining pixels and increase the problems of color mixing." *Id.*

We note that Patent Owner does not cite to the Afromowitz Declaration's paragraph 93 description of Kimura discussed above, nor is the description contained in the paragraph restated or otherwise argued in the Response. What the Response states is Dr. Afromowitz's conclusion in paragraph 94 of his declaration regarding his understanding of Petitioner's modification to Tomoda, and how such modification, as illustrated in annotated Tomoda Figure 1, would increase color bleeding. *See* PO Resp. 38. We understand Patent Owner's argument to be that a person of ordinary skill would not design a photosensor by physically combining the structures of Tomoda and Kimura because Kimura's lens would increase color bleeding, not reduce it. This argument is not persuasive, however, because we agree with Petitioner that Kimura is cited only for its teaching of a color

filter in a solid-state image sensing device that also includes reflecting walls. *See* Pet. Reply 31 (citing Pet. 48–51). The question is not whether the references could be physically combined but whether the claimed inventions are rendered obvious by the teachings of the prior art as a whole. *In re Etter*, 756 F.2d 852, 859–60 (Fed. Cir. 1985) (citing *Orthopedic Equip. Co. v. United States*, 702 F.2d 1005, 1013 (Fed. Cir. 1983)). Accordingly, we agree that a person of ordinary skill would have had a reasonable expectation of success in designing and producing an image sensor such as Tomoda with a color filter as taught by Kimura and would achieve the predictable result of capturing color images. *See* Pet. 51–52 (citing Ex. 1002 ¶ 175).

Petitioner's argument and supporting evidence show by a preponderance of the evidence that claim 4 would have been obvious over Tomoda and Kimura.

6. Claims 6 and 7 – Obviousness Over Tomoda and Aoki (Ground 4)

Petitioner alleges claims 6 and 7 would have been obvious over Tomoda and Aoki. Pet. 53–56. Petitioner cites the Guidash Declaration in support of its positions. *See* Ex. 1002 ¶¶ 177–191. Patent Owner relies on the same arguments and evidence, including the Afromowitz Declaration, for patentability already addressed above in connection with claim 1. PO Resp. 36–37. No separate argument is made with respect to Ground 4.

a. Claim 6

Claim 6 depends from claim 1 and recites "wherein the reflecting walls are composed of a material having a refractive index lower than that of an insulating film disposed between the reflecting walls." Aoki teaches reflecting walls, which are "grooves 407 . . . normally filled with air or an

inert gas such as nitrogen." Ex. 1017 ¶ 33. Petitioner asserts that the grooves of Aoki Figure 4 are reflecting walls with an insulating film ("resin layer 409") disposed between the reflecting walls. Pet. 53 (citing Ex. 1017 ¶ 33; Ex. 1002 ¶ 181). Aoki teaches that the groove has a refractive index of 1.0 and the resin layer has a higher refractive index of 1.6. Ex. 1017 ¶ 33. Petitioner relies on paragraph 33 of Aoki and the Guidash Declaration as teaching the recited limitation. Pet. 54 (citing Ex. 1002 ¶¶ 182–183). Petitioner also notes that the '034 patent describes that the reflecting wall may be materials other than metals. *Id.* (citing Ex. 1001, 9:24–31; Ex. 1002 ¶ 184).

b. Claim 7

Claim 7 depends from claim 6 and recites "wherein the insulating film is composed of any one selected from a group consisting of SOG resin layer, SiO2 and SiON." Petitioner relies on the Guidash Declaration testimony that Aoki's "resin layer 409," discussed above in connection with claim 6, "refers to a SOG resin layer (i.e., a Spin-On-Glass resin layer)." Pet. 60 (citing Ex. 1002 ¶ 360).

c. Rationale and Motivation for the Combination

We have reviewed Petitioner's argument and evidence concerning why a person of ordinary skill in the art would combine Tomoda's image sensor with Aoki. Pet. 54–56 (citing Ex. 1003 ¶ 25; Ex. 1017 ¶ 33; Ex. 1002 ¶¶ 187, 189). Specifically, we adopt Petitioner's showing that a person of ordinary skill would have expected to achieve a predictable result by combining Tomoda's light shielding layers and Aoki's light shielding around the grooves and resin taught in Aoki. *Id.* at 55 (citing Ex. 1002 ¶¶ 186–187; Ex. 1003 ¶ 25; Ex. 1017 ¶ 33). Petitioner also argues Aoki

describes improving light collection efficiency and image quality as a predictable result. *Id.* (citing Ex. 1017 ¶ 33; Ex. 1002 ¶ 187). We agree and find that a skilled artisan would have had reasons to combine Tomoda and Aoki.

d. Summary

Petitioner's argument and evidence show by a preponderance of the evidence that claims 6 and 7 would have been obvious over Tomoda and Aoki.

7. Claims 10, 11, 13, 14, and 18 – Obviousness Over Tomoda, Kimura, and Kuroiwa (Ground 5)

Petitioner alleges claims 10, 11, 13, 14, and 18 would have been obvious over Tomoda and Aoki. Pet. 56–57. Petitioner cites the Guidash Declaration in support of its positions. *See* Ex. 1002 ¶¶ 193–242. Patent Owner relies on the same arguments and evidence, including the Afromowitz Declaration, for patentability already addressed above in connection with claim 1. PO Resp. 37. Patent Owner incorporates the arguments regarding Kimura it made in connection with claim 4 (i.e., the ground based on obviousness over Tomoda and Kimura (Ground 3)). *Id.*; *see* Section III.D.5 above. No additional argument is made with respect to Ground 5.

a. Claim 10

Petitioner asserts limitations 10[a]–[10f] correspond to like limitations in claim 1 and relies on its showing that Tomoda anticipates claim 1 for these limitations. Pet. 66–67 (citing Ex. 1002 ¶ 370). We agree with Petitioner's comparison of claims 1 and 10. For the reasons set out above in connection with limitations 1[a]–[1f], Petitioner has sufficiently shown that Tomoda discloses limitations 10[a]–[10f]. *See id.* at 62 (citing Ex. 1002

¶ 201); *see also* Section III.C.3.a above. As summarized below, we adopt Petitioner's showing regarding the remaining limitations of claim 10, [10g]–[10i]. *See* Pet. 62–75.

As recited in limitations [10g]–[10h], Petitioner contends independent claim 10 differs from claim 1 as follows:

> Independent claim 10 adds to this structure another set of micro lenses formed between the reflecting walls of each pixel. . . . This additional set of micro lenses—formed between the inwardly displaced reflecting walls—are also displaced toward the CPRR in pixels located in the sensor's periphery.

Pet. 57 (citing Ex. 1002 ¶ 194).

Kimura is cited by Petitioner "for its teaching of an additional set of micro lenses provided *between* the reflecting walls." Pet. 57 (citing Ex. 1007, Abstract, Fig. 1; Ex. 1002 ¶ 195). Petitioner alleges generally that Kimura does not teach displacement of the micro lenses and reflecting walls, for which Petitioner relies on Tomoda. *Id.* at 58 (citing Ex. 1003 ¶¶ 16–17; Ex. 1002 ¶¶ 196–197).

Petitioner's showing includes a first annotation of Figure 1 of Tomoda and Figure 1 of Kimura. Petitioner's first annotation is reproduced below.

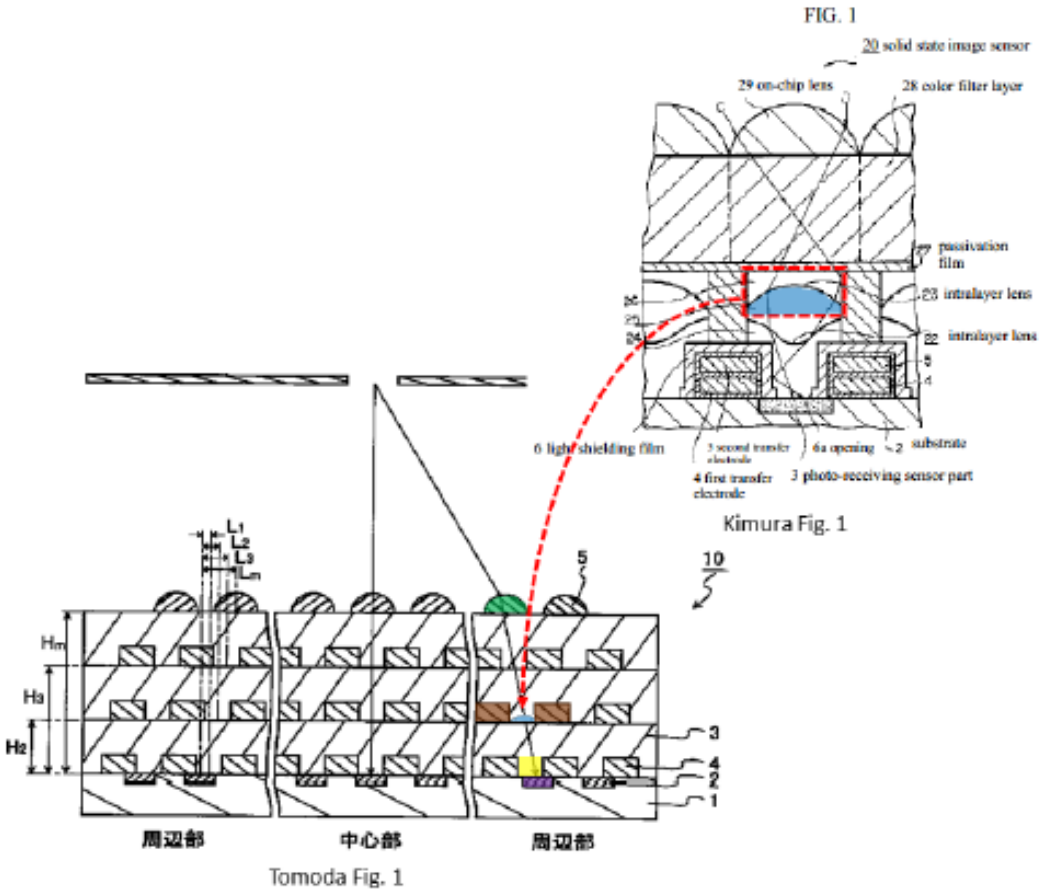

Petitioner's First Annotation of
Figure 1 of Tomoda and Figure 1 of Kimura

Pet. 60 (Ex. 1002 ¶ 195). Petitioner's annotation illustrates Kimura's second micro lens disposed between the reflecting walls of Tomoda's solid-state image pickup device. *Id.* at 59 (citing Ex. 1002 ¶ 198). The annotation shows Tomoda's light-sensitive element as purple, aperture as yellow, reflecting walls as brown, and micro lens in green. *Id.* The annotation shows Kimura's micro lens in blue. *Id.* Petitioner cites to the Guidash Declaration to show "this combination would have been within ordinary skill to achieve through a process of depositing, patterning, and etching the layers." *Id.* (citing Ex. 1002 ¶ 207).

Petitioner relies on Kuroiwa to "show that it would have been obvious for the micro lenses between the reflecting walls to inwardly shift." Pet. 60 (citing Ex. 1002 ¶ 199). Figure 2 of Kuroiwa is reproduced below.

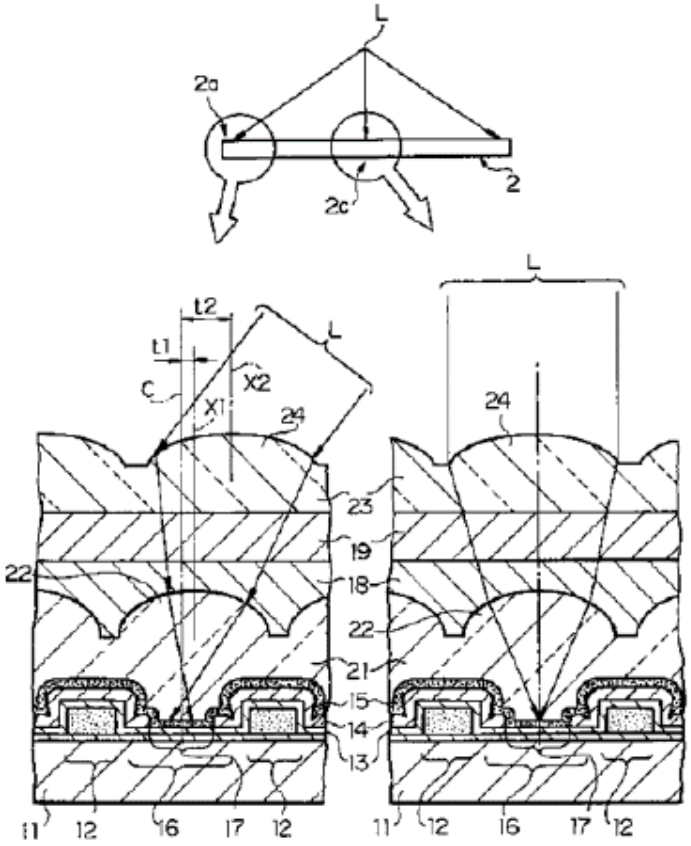

別の実施形態の概略構成断面図

Kuroiwa Fig. 2

Kuroiwa Figure 2

Pet. 61. Petitioner describes Kuroiwa's Figure 2 as illustrating a cross section of a pixel comprising "first microlenses 22" and "second microlenses 24." *Id.* at 60–61 (citing Ex. 1009 ¶ 22; Ex. 1002 ¶ 200). Petitioner relies on Figure 2 to teach that the microlenses are shifted toward the center of the photoreceiving region "as indicated by the labels 't1' (displacement of the

lower lens) and 't2' (displacement of the upper lens)." *Id.* at 61 (citing Ex. 1009 ¶ 23; Ex. 1002 ¶ 200).

Limitation [10g] recites "a plurality of a first micro lenses provided between the reflecting walls." Petitioner relies on Tomoda's teaching of micro lenses over reflecting walls, i.e., the second micro lens of claim 10. Pet. 62 (Ex. 1002 ¶ 202). Petitioner also argues that Kimura discloses "**a plurality of first micro lenses provided between the reflecting walls.**" *Id.* at 62–63 (citing Ex. 1007 ¶ 17, Fig. 1 (see also annotation and discussion above); Ex. 1002 ¶ 202).

Citing to the first annotation Figure 1 of Tomoda and Figure 1 of Kimura above (reproduced again at Pet. 64), Petitioner contends "[i]t would have been obvious to combine Tomoda's image sensor with Kimura's teaching of micro lenses between the reflecting walls." *Id.* at 63 (citing Ex. 1002 ¶ 204). Further, Petitioner alleges the combination would have been implemented by one of ordinary skill. *Id.* at 64–65 (citing Ex. 1003 ¶ 25, Ex. 1007 ¶ 26; Ex. 1002 ¶¶ 205–207). Petitioner also describes predictable advantages to the combination, including better focusing and more efficient light collection. *Id.* at 65–66 (citing Ex. 1007 ¶ 31; Ex. 1002 ¶¶ 208–210).

Limitation [10h] recites "a plurality of a second micro lenses provided over the reflecting walls and the apertures." Petitioner points to Tomoda's teaching of a plurality of micro lenses positioned over the reflecting walls and the apertures. Pet. 66 (citing Ex. 1002 ¶ 211). As with limitation [10g], Tomoda's micro lens corresponds to the second micro lens. *Id.*

The combination is shown in a second annotation of Figure 1 of Tomoda and Figure 1 of Kimura Figure 1 reproduced below.

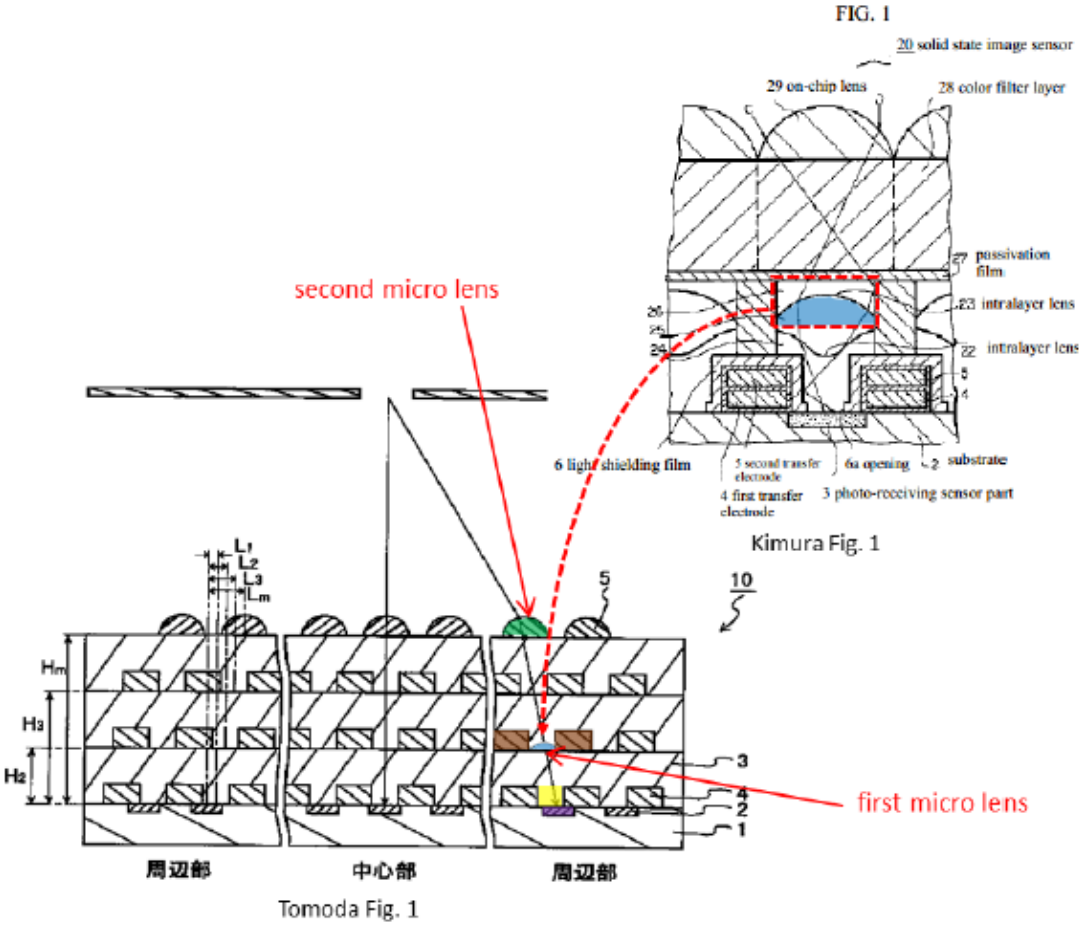

Petitioner's Second Annotation of Figure 1 of Tomoda and Figure 1 of Kimura

Pet. 67 (citing Ex. 1002 ¶ 211).

Limitation [10i] recites

> wherein the plurality of the first and second micro lenses disposed in an inner periphery of the photoreceiving region, and the plurality of reflecting walls corresponding to the first and second micro lenses are disposed such that a center of each of the first micro lenses, a center of each of the second micro lenses, and a center of each of the reflecting walls opposing each other

> are displaced from a center of the aperture toward a center of the photoreceiving region, and
>
> an amount of displacement between the center of the photoreceiving region and the center of the reflecting walls, an amount of displacement between the center of the photoreceiving region and the center of the first micro lens are smaller than that of displacement between the center of the photoreceiving region and the center of the second micro lens.

Petitioner relies primarily on Patent Owner's construction regarding claim 1[23] and its showing in connection with limitation [1h] above. Pet. 68–70 (citing Ex. 1013, 1–2; Ex. 1002 ¶¶ 212–216).

Petitioner references its showing regarding limitations [1h] and [10g]–[10h] to conclude "Tomoda discloses the recited displacement of the reflecting walls and *second* set of micro lenses." Pet. 70 (citing Ex. 1002 ¶ 217). Kimura is relied on by Petitioner to teach micro lenses provided between the reflecting walls, which correspond to the *first* micro lenses. *Id.* (citing Ex. 1002 ¶ 218). Petitioner acknowledges that Kimura does not disclose displacement of its micro lenses. *Id.* at 71 (citing Ex. 1002 ¶ 218).

Petitioner relies on expert testimony to establish a rational basis for the combination of Kuroiwa with Tomoda and Kimura regarding the displacement of the two micro lenses. Pet. 71–75. Citing the Guidash Declaration, Petitioner concludes that "[a]s Tomoda discloses the required

---

[23] In Section III.A above we did not construe the "displacement" limitation recited in this limitation [10i] nor did we rely on the letter to the District Court in the related litigation (Ex. 1013). The parties do not dispute the construction or that limitation [1h] is taught by Tomoda and Tomoda and Kimura with respect to limitation [10i]. *See* Pet. 32–38 (limitation [1h]); *id.* at 71–75 (limitation [10i]). We find that Petitioner has shown limitation [10i] without the need for construction of any part of the limitation.

displacement with regard to the center of the reflecting walls, it follows that the first micro lenses would naturally be similarly displaced." *Id.* at 71 (citing Ex. 1002 ¶ 219).

Petitioner argues "Kuroiwa discloses an image sensor comprising a plurality of first and second micro lenses, and also discloses the technique of shifting both of the lenses," and the advantages of such an arrangement. Pet. 78–79 (citing Ex. 1009 ¶¶ 21–25, 31, Fig. 2 (illustrated above); Ex. 1002 ¶¶ 220–225). One advantage cited is increasing "light collection ability and thereby reduc[ing] edge shading 'even for a camera employing an optical system having a short exit pupil distance.'" *Id.* at 74 (citing Ex. 1009 ¶ 31; Ex. 1002 ¶ 226). Petitioner concludes that "[o]ne of ordinary skill would have been motivated to inwardly displace the first set of micro lenses disposed between the reflecting walls to achieve these advantages" and there "would have been no unpredictable results." *Id.* at 75 (citing Ex. 1002 ¶ 227). We agree and find that a skilled artisan would have had reasons to combine Tomoda, Kimura, and Kuroiwa.

b. Claims 11, 13, 14, 18

Claims 11, 13, 14, and 18 depend from claim 10. We have reviewed Petitioner's evidence and argument on Tomoda, Kimura, and Kuroiwa regarding these claims, as well as the Guidash Declaration. Pet. 75–79; Ex. 1002 ¶¶ 229–242.

Claim 11 is reproduced below.

> 11[a]. The solid-state imaging device according to claim 10, wherein the greater a distance from the center of the photoreceiving region becomes, the greater an amount of displacement between the center of the photoreceiving region and the center of the reflecting walls is,

> [11b] the greater an amount of displacement between the center of the photoreceiving region and the center of the first micro lens is, and
>
> [11c] the greater an amount of displacement between the center of the photoreceiving region and the center of the second micro lens is.

As to limitation 11[a], Petitioner cites to its showing regarding claim 2 above. Pet. 75 (citing Ex. 1002 ¶ 229); *see also* Section III.C.3.b above (claim 2 is anticipated by Tomoda).

For limitation [11b], Petitioner contends "Kimura discloses first micro lenses between the reflecting walls, and it would have been obvious to include that first micro lens between Tomoda's reflecting walls and to have the first micro lenses shift to the same extent as those reflecting walls." Pet. 76 (citing Ex. 1002 ¶ 231). Petitioner also relies on its argument and evidence relating to limitations 10[g] and 10[h]. *Id.*; *see* Section III.D.7.a above. Petitioner argues increasing pixels as the periphery of the photoreceiving region is shown in connection with limitation 11[a] above and disclosed in Kuroiwa. Pet. 76 (citing Ex. 1002 ¶ 231). Petitioner alleges it was also known from Kimura "to have two sets of micro lenses with a gradually increasing inward shift in pixels approaching the periphery of photoreceiving region." *Id.* at 76–78 (citing Ex. 1002 ¶¶ 232–234; Ex. 1009 ¶¶ 23, 31).

Petitioner cites its showing for limitation [2b] above for limitation [11c]. Pet. 78. Specifically, "Tomoda discloses this limitation for its micro lens, which corresponds to the second micro lens (as discussed for element [10g])." *Id.* (citing Ex. 1002, ¶235); *see also* Section III.C.3.b above (limitation [2b]).

Claim 13 recites "[t]he solid-state imaging device according to claim 10, wherein a color filter is formed on each of the plurality of reflecting walls." Petitioner references Tomoda and its showing regarding claim 4 and the combination of Tomoda and Kimura for this limitation. Pet. 78–79 (citing Ex. 1002 ¶ 237); *see also* Section III.D.5 above (claim 4 obvious over Tomoda and Kimura).

Claim 14 recites "[t]he solid-state imaging device according to claim 10, wherein the reflecting walls are composed of metal." Petitioner references its showing that Tomoda discloses the subject matter of claim 5. Pet. 78–79 (citing Ex. 1002 ¶ 239); *see also* Section III.C.3.b above (claim 5 anticipated by Tomoda).

Claim 18 recites "[t]he solid-state imaging device according to claim 10, wherein the solid-state imaging device is a MOS type solid-state imaging device." Petitioner references its showing that Tomoda discloses the subject matter of claim 9. Pet. 79 (citing Ex. 1002 ¶ 241); *see also* Section III.C.3.b above (claim 9 anticipated by Tomoda).

c. Summary

Petitioner's argument and evidence show by a preponderance of the evidence that claims 10, 11, 13, 14, and 18 would have been obvious over Tomoda, Kimura, and Kuroiwa.

8. Claims 12 and 17 – Obviousness Over Tomoda, Kimura, Kuroiwa, and Abe (Ground 6)

Petitioner alleges claims 12 and 17 would have been obvious over Tomoda, Kimura, Kuroiwa, and Abe. Pet. 79–80. Petitioner cites the Guidash Declaration in support of its positions. *See* Ex. 1002 ¶¶ 245–248. Patent Owner relies on the same arguments and evidence, including the Afromowitz Declaration, for patentability already addressed above in

connection with claim 1. PO Resp. 37. Patent Owner incorporates the arguments regarding Kimura it made in connection with claim 4 (i.e., the ground based on obviousness over Tomoda and Kimura (Ground 3)). *Id.*; *see* Section III.D.5 above. No additional argument is made with respect to Ground 6.

Claim 12 depends from claim 10 and recites the same limitation as recited in claim 3, i.e., "wherein a vertical cross section of the reflecting wall is a trapezoid whose upper base is longer than a lower base." Petitioner relies on the same argument and evidence it presents with respect to claim 3 above (Ground 2). Pet. 79 (citing Ex. 1002 ¶ 245); *see also* Section III.D.4.a above (claim 3 obvious over Tomoda and Abe).

Claim 17 depends from claim 10 and recites "wherein the solid-state imaging device is a CCD type solid-state imaging device." Petitioner relies on the same argument and evidence it presents with respect to claim 8 above. Pet. 84–85 (citing Ex. 1002 ¶ 247); *see also* Section III.D.4.b above (claim 8 obvious over Tomoda and Abe).

Petitioner's argument and evidence show by a preponderance of the evidence that claims 12 and 17 would have been obvious over Tomoda, Kimura, Kuroiwa, and Abe.

9. Claims 15 and 16 – Obviousness Over Tomoda, Kimura, Kuroiwa, and Aoki (Ground 7)

Petitioner alleges claims 15 and 16 would have been obvious over Tomoda, Kimura, Kuroiwa, and Aoki. Pet. 80. Petitioner cites the Guidash Declaration in support of its positions. *See* Ex. 1002 ¶¶ 249–250. Patent Owner relies on the same arguments and evidence, including the Afromowitz Declaration, for patentability already addressed above in connection with claim 1. PO Resp. 37. Patent Owner incorporates the

arguments regarding Kimura it made in connection with claim 4 (i.e., the ground based on obviousness over Tomoda and Kimura (Ground 3)). *Id.*; *see* Section III.D.5 above. No additional argument is made with respect to Ground 7.

Claim 15 depends from claim 10 and recites "wherein the reflecting walls are composed of a material having a refractive index lower than that of an insulating film disposed between the reflecting walls." Petitioner relies on the same argument and evidence it presents with respect to claim 6 above. Pet. 80; *see also* Section III.D.6.a above (claim 6 obvious over Tomoda and Aoki).

Claim 16 depends from claim 15 and recites "wherein the insulating film is composed of any one selected from a group consisting of SOG resin layer, SiO2 and SiON." Petitioner relies on the same argument and evidence it presents with respect to claim 7 above. Pet. 80 (citing Ex. 1002 ¶ 253); *see also* Section III.D.6.b above (claim 7 obvious over Tomoda and Aoki).

Petitioner's argument and evidence show by a preponderance of the evidence that claims 15 and 16 would have been obvious over Tomoda, Kimura, Kuroiwa, and Aoki.

E. Patent Owner's Motion to Exclude

In its Motion, Patent Owner moves to exclude Exhibit 1021, a "2011 Leica catalog" submitted with Petitioner's Reply. Motion, 1. We do not rely on Exhibit 1021 in this Decision. We dismiss the Motion as to Exhibit 1021 as moot.

Patent Owner also seeks to exclude Exhibit 1009, a translation of Kuroiwa, as inadmissible hearsay under Federal Rules of Evidence 801–802. Motion, 4. Patent Owner does not argue why Exhibit 1009 is hearsay.

Accordingly, Petitioner's Opposition does not respond with respect to Exhibit 1009. *See generally* Opposition.

Exhibit 1009 includes a "Certification of Translation." Ex. 1009, 8. The Certification relates to the same "Japanese Unexamined Patent Application Publication No. H1G229180" as the Japanese version of Kuroiwa. *Compare* Ex. 1009, 8, *with* Ex. 1010, (11) ("10–229180"). Absent some stated reason why the English Translation of Kuroiwa is hearsay, we deny the Motion as to Exhibit 1009. *See* 37 C.F.R. § 42.20(c) ("The moving party has the burden of proof to establish that it is entitled to the requested relief.").

IV. ORDER

In consideration of the foregoing, it is hereby:

ORDERED that, based on a preponderance of the evidence, claims 1–18 of U.S. Patent No. 7,023,034 B2 have been shown to be unpatentable; and

FURTHER ORDERED that Patent Owner's Motion to Exclude (Paper 24) is *dismissed* with respect to Exhibit 1021 and *denied* with respect to Exhibit 1009.

Because this is a final written decision, parties to this proceeding seeking judicial review of our decision must comply with the notice and service requirements of 37 C.F.R. § 90.2.

ANDERSON, *Administrative Patent Judge, dissenting-in-part.*

I join the majority opinion holding that claims 1, 2, 4–11, and 13–18 of the ’034 patent are unpatentable, but I respectfully dissent from the majority regarding the patentability of claims 3 and 12.[24] Claims 3 and 12 depend respectively from claims 1 and 10. Both claims 3 and 12 recite “wherein *a vertical cross section* of the reflecting wall *is a trapezoid* whose upper base is longer than a lower base.” I am not persuaded that Abe teaches a cross section in the shape of a trapezoid.

“In an [*inter partes* review], the petitioner has the burden from the onset to show with particularity why the patent it challenges is unpatentable.” *Harmonic Inc. v. Avid Tech., Inc.*, 815 F.3d 1356, 1363 (Fed. Cir. 2016) (citing 35 U.S.C. § 312(a)(3) (requiring *inter partes* review petitions to identify “with particularity . . . the evidence that supports the grounds for the challenge to each claim”)). This burden of persuasion never shifts to Patent Owner. *See Dynamic Drinkware, LLC v. Nat’l Graphics, Inc.*, 800 F.3d 1375, 1378–79 (Fed. Cir. 2015) (citing *Tech. Licensing Corp. v. Videotek, Inc.*, 545 F.3d 1316, 1326–27 (Fed. Cir. 2008)) (discussing the burdens of persuasion and production in *inter partes* review).

Neither the panel nor the parties offered any construction for “trapezoid.” No construction beyond the plain and ordinary meaning of “trapezoid,” which is a quadrilateral with only one set of parallel sides, is required. A trapezoid defines an enclosed area. It has four sides. Abe does not disclose such a shape.

[24] I also join in the majority’s determination to address the arguments made in the ’960 IPR relating to claims 3 and 12 here.

Petitioner's showing is summarized by the majority in Section III.D.4.a.(1) above and includes the Annotation of Abe Figure 3 ("Annotated Figure 3") and the associated argument at pages 43–46 of the Petition. The "trapezoid" shape of the limitation is alleged to be taught through Annotated Figure 3 at page 43 of the Petition, which "highlight[s] a pair of reflecting walls in brown." At the top of Annotated Figure 3 is Petitioner's heading for the drawing, repeating the limitation in red, including that a "trapezoid" is shown in brown.

As useful as annotated figures can be, they are not evidence. Like demonstrative exhibits, annotated drawings help explain the evidence and argument. With respect to Annotated Figure 3, the brown shading placed on the drawing by Petitioner is indeed a trapezoid. Figure 3 of Abe is reproduced below.

FIG. 3

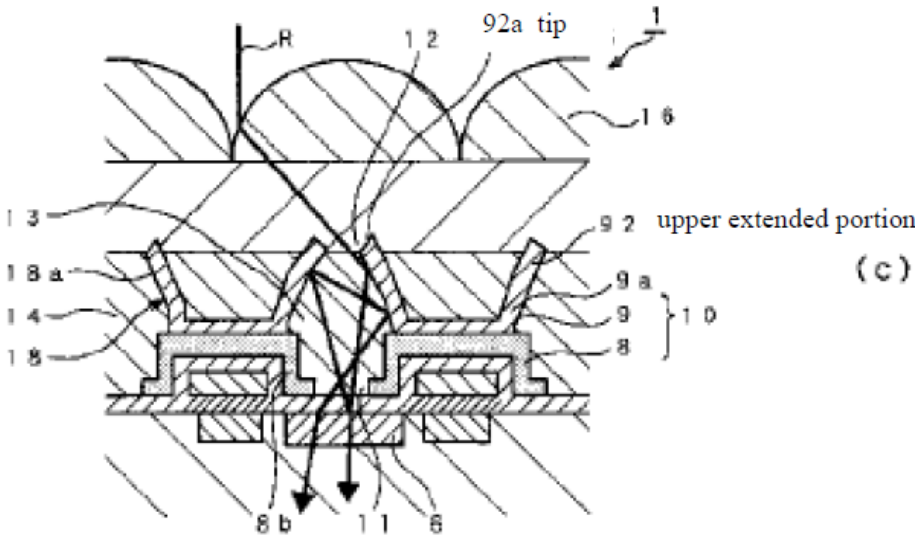

Figure 3 of Abe includes neither shading nor does it disclose a trapezoid. The lateral faces 9a and upper extended portion 92 are relied on by Petitioner to show "reflecting walls." Pet. 44–45 (citing Ex. 1005 ¶¶ 38, 47;

Ex. 1002 ¶¶ 144, 145). The cited portions of Abe do not describe a trapezoid but rather how light is reflected by lateral faces 8b of light shielding film 8 and 9a of second light shielding film toward opening 11, "instead of exiting the opening 13." Ex. 1005 ¶ 38; *see also* ¶ 27, Fig. 3 (describing path of light ray R as "incident on the sensor part 6 via the second opening 12 of the second light shielding film 9"). Lateral face 8b is not even a part of the structure identified by Petitioner as a "trapezoid." *See* Ex. 1005, Fig. 3 at 8b. Abe does not describe what happens to light incident to the interior of the structure Petitioner identifies as the "trapezoid." Indeed, there is no discussion that light is ever incident on the interior of the alleged trapezoid structure.

The Petition relies on the Guidash Declaration to make the leap from the structure actually shown in Abe to a conclusion that "[t]his describes that the **vertical cross section of the reflecting wall is a trapezoid whose upper base is longer than a lower base**, as seen in Fig. 3." Pet. 45 (citing Ex. 1002 ¶ 146 (citing Ex. 1005 ¶ 44)). Like paragraph 38, paragraph 44 describes Figure 3 and how light is reflected off of the lateral faces 9a of the upper extended portions. *See* Pet. 45. The Guidash Declaration's conclusion that Abe shows, among other things, a "trapezoid," is not supported by any other evidence beyond how Abe's structure reflects the light. *See* Ex. 1002 ¶¶ 143–146 (citing Ex. 1005 ¶¶ 38, 44, 47). I give no weight to the Guidash Declaration testimony that Abe teaches a "trapezoid." *See* 37 C.F.R. § 42.65(a) (expert testimony failing to disclose factual basis entitled to little or no weight). Indeed, expert testimony is not required in order to determine that a shape is a trapezoid.

The majority finds that the entire structure, including the second insulating film 14 teaches a trapezoid. Thus, the insulating film provides a top to the light shielding film 9, completing the "trapezoid" shape by providing the fourth side. While this could be the case, the Petition makes no such argument beyond the shading of Abe's Figure 3. As such, the Petition has not identified "with particularity . . . the evidence that supports the grounds for the challenge to each claim." *See Harmonic Inc.*, 815 F.3d at 1363. Even had the Petition made such an argument, I do not find that the upper extended portions are straight, as is required by a trapezoid. Furthermore, the tips 92a of the upper extended portions of Figure 3 extend beyond the alleged "trapezoid," further clouding what the Petition relies on. More than generalities are required.

Because the majority's determination of obviousness of dependent claims 3 and 12 is based entirely on its finding that Abe teaches a cross section that is a "trapezoid," I respectfully dissent from the majority's determination that dependent claims 3 and 12 are unpatentable.

PETITIONER:

Matthew Smith
smith@smithbaluch.com

PATENT OWNER:

Terry Saad
tsaad@bcpc-law.com

Nicholas Kliewer
nkliewer@bcpc-law.com