Trials@uspto.gov
Tel: 571-272-7822

Paper 36
Entered: October 10, 2018

UNITED STATES PATENT AND TRADEMARK OFFICE

BEFORE THE PATENT TRIAL AND APPEAL BOARD

ITRON, INC.,
Petitioner,

v.

SMART METER TECHNOLOGIES, INC.,
Patent Owner.

Case IPR2017-01199
Patent 7,058,524 B2

Before BRYAN F. MOORE, BARBARA A. BENOIT, and JOHN D. HAMANN, *Administrative Patent Judges*.

HAMANN, *Administrative Patent Judge*.

FINAL WRITTEN DECISION
U.S.C. § 318(a) and 37 C.F.R. § 42.73

I. INTRODUCTION

This *inter partes* review, instituted pursuant to 35 U.S.C. § 314, challenges the patentability of claims 17–22 ("the challenged claims") of U.S. Patent No. 7,058,524 B2 ("the '524 patent," Ex. 1001), owned by Smart Meter Technologies, Inc. ("Patent Owner"). We have jurisdiction under 35 U.S.C. § 6. This Final Written Decision is entered pursuant to 35 U.S.C. § 318(a) and 37 C.F.R. § 42.73.

For the reasons discussed herein, Itron, Inc. ("Petitioner") has shown by a preponderance of the evidence that the challenged claims of the '524 patent are unpatentable.

II. BACKGROUND

A. Procedural History

On March 30, 2017, Petitioner filed a Petition requesting *inter partes* review of the challenged claims of the '524 patent. Paper 2 ("Pet."). The Petition is supported by the Declaration of Dr. Robert Akl, D.Sc. ("Akl Decl.," Ex. 1003). Patent Owner filed a Preliminary Response. Paper 7.

On October 11, 2017, we instituted *inter partes* review of all of the challenged claims of the '524 patent, but only on one of three asserted grounds. Paper 8 ("Inst. Dec."), 17, 20. On January 15, 2018, Patent Owner filed a Response to the Petition. Paper 17 ("PO Resp."). The Patent Owner Response is supported by the Declaration of Thomas L. Blackburn ("Blackburn Decl.," Ex. 2001) and the Supplemental Declaration of Thomas L. Blackburn ("Suppl. Blackburn Decl.," Ex. 2002). On May 3, 2018, Petitioner filed a Reply to Patent Owner's Response. Paper 21 ("Pet. Reply").

On April 24, 2018, the Supreme Court held that a decision on institution under 35 U.S.C. § 314 may not institute on less than all claims presented in a petition. *SAS Institute Inc. v. Iancu*, 138 S. Ct. 1348, 1358 (2018). In addition, according to the "Guidance on the impact of SAS on AIA trial proceedings" posted to the U.S. Patent and Trademark Office's website on April 26, 2018,[1] a decision granting institution will institute on all of the grounds set forth in the petition. The Federal Circuit has since endorsed this policy. *Adidas AG v. Nike, Inc.*, 894 F.3d 1256, 1258 (Fed. Cir. 2018). In light of *SAS* and this Guidance, we modified our Institution Decision to institute trial on the two additional grounds that were presented in the Petition, but for which trial was not instituted. Paper 22, 2. On May 10, 2018, with our authorization, the parties filed a Joint Motion to Limit the Petition to the sole ground for which we instituted trial in our Institution Decision, removing the two additional grounds added after the *SAS* decision. Paper 23, 1–2. We granted this motion on May 24, 2018. Paper 28, 3.

On May 10, 2018, Patent Owner filed Observations on certain cross-examination testimony of Petitioner's declarant, Dr. Akl, and certain testimony of Patent Owner's declarant, Mr. Blackburn. Paper 26 ("Obs."). Petitioner filed a Response (Paper 27) ("Obs. Resp."). We have considered these observations and responses in rendering this Decision, and we have accorded the cited testimony appropriate weight, as explained herein.

An oral hearing was held on June 7, 2018. A transcript of the oral hearing is included in the record. Paper 35 ("Tr.").

---

[1] www.uspto.gov/patents-application-process/patent-trial-and-appeal-board/trials/guidance-impact-sas-aia-trial.html.

B. Related Proceeding

The parties identified *Smart Meter Technologies, Inc. v. Duke Energy Corp.*, Case No. 1:16-cv-00208 (D. Del.), as a judicial matter that would affect or would be affected by a decision in this proceeding. Pet. 1; Paper 4 (Patent Owner's Mandatory Notices), 2.

C. The '524 Patent

The '524 patent generally relates to a power metering system for measuring electrical power consumption, converting the measurements to Internet Protocol ("IP") format, and transmitting the IP formatted power consumption information across a network (e.g., a power line network). Ex. 1001, 1:6–11, 1:55–64. Figure 1, shown below, illustrates a power metering system in accordance with the invention of the '524 patent.

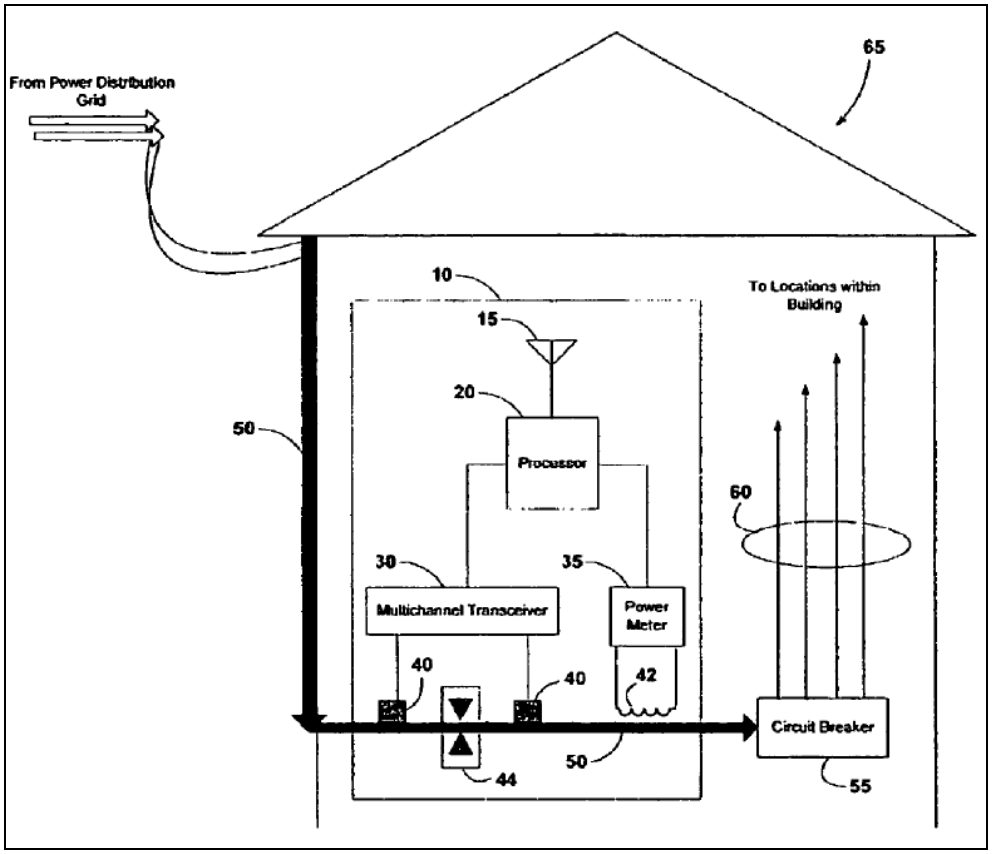

Figure 1 illustrates a schematic diagram of power metering system 10 installed in dwelling 65. *Id.* at 2:57–59. Power line 50 connects dwelling 65's circuit breaker 55 to the local power distribution grid. *Id.* at 2:59–60. Power metering system 10, as installed, can "measure[] power consumption information on power line 50, before circuit breaker 55" (i.e., the power consumed within dwelling 65). *Id.* at 2:67–3:2. In this embodiment, "power metering system 10 includes . . . processor 20, multichannel transceiver 30, power meter 35, one or more clamp contacts 40, split-core transformer 42, and clamp filter 44, which operate together to provide data acquisition, power measurement, data conversion, and data transmission services." *Id.* at 3:17–22.

With respect to this embodiment, "[s]plit-core transformer 42 is inductively coupled with power line 50 and senses fluctuations in current flow in power line 50, the fluctuations being indicative of rising and falling power consumption rates within [] dwelling 65." Transformer 42's output is fed to power meter 35, which uses the output "to perform active power measurement from power line 50" and to "produc[e] a serial output signal corresponding to power consumption information." *Id.* at 3:23–41. In turn, "[t]he output [(i.e., power consumption information)] from power meter [35] is fed to processor 20 and converted [(i.e., into IP format)] for transmission across a network." *Id.* at 3:42–44. More specifically, "multichannel transceiver 30 interfaces with power line 50 via . . . clamp contacts 40, . . . [and] allows [] processor 20 . . . to transmit and receive IP data [(e.g., the power consumption information)] from power line 50 using known power line protocols." *Id.* at 3:49–55. For example, power metering system 10 can transmit the "IP-encapsulated power consumption" information over power

line 50 to destinations external to dwelling 65 (e.g., to other nearby dwellings) via the distribution grid. *Id.* at 6:64–7:3, 7:7–9. As illustrated, power metering system 10 "also includes a filter 44 for selectively filtering data transmitted across power line 50." *Id.* at 4:9–10. More specifically, "filter 44 prevents undesired . . . IP data extant on power line 50 and originating from a source outside of dwelling 65 from entering the power lines therein" and "prevents selected . . . IP data generated within dwelling 65 from exiting power line 50 and being transmitted across the power distribution grid." *Id.* at 4:11–16.

D. Illustrative Claim

Of the challenged claims, claim 17 is an independent claim, and claims 18–22 depend, directly or indirectly, therefrom. Claim 17 is illustrative of the claimed subject matter and is reproduced below.

> 17. A method of measuring power consumption information on a power line comprising:
>
> measuring current fluctuations in the power line;
>
> calculating power consumption information from the current fluctuations in a processor;
>
> converting the power consumption information into IP-based power consumption information in the processor; and
>
> transmitting the IP-based power consumption information from the processor to a destination autonomously in IP format over an external power line network.

E. Ground of Unpatentability

The asserted ground of unpatentability remaining in the trial is that claims 17–22 of the ’524 patent are unpatentable under 35 U.S.C. § 103(a)[2] as obvious over Suh et al. (U.S. Patent App. Pub. No. 2002/0161536 A1 (published Oct. 31, 2002) (Ex. 1006, “Suh”)).[3] Inst. Dec. 20; Paper 28, 3.

III. DISCUSSION

A. Level of Ordinary Skill in the Art

In determining the level of ordinary skill in the art, various factors may be considered, including the “type of problems encountered in the art; prior art solutions to those problems; rapidity with which innovations are made; sophistication of the technology; and educational level of active workers in the field.” *In re GPAC, Inc.*, 57 F.3d 1573, 1579 (Fed. Cir. 1995) (quoting *Custom Accessories, Inc. v. Jeffrey-Allan Indus., Inc.*, 807 F.2d 955, 962 (Fed. Cir. 1986)). “[O]ne or more factors may predominate.” *Id.*

Petitioner asserts a person of ordinary skill in the art at the time of the invention of the ’524 patent “would have had a bachelor’s degree in

---

[2] The Leahy-Smith America Invents Act (“AIA”) included revisions to 35 U.S.C. § 100 *et seq.* effective on March 16, 2013. Because the ’524 patent issued from an application filed before March 16, 2013, we apply the pre-AIA versions of the statutory bases for unpatentability.

[3] Petitioner states that “[w]hile [it] does not rely on the ’524 [patent’s Admitted Prior Art (APA)] as an additional reference, its disclosure confirms the state of the prior art that would have been part of a [person having ordinary skill in the art]’s knowledge.” Pet. 19 (citations omitted); *see also* Tr. 6:3, 6:11–12 (Petitioner stating “Suh alone renders all of these claims obvious” and that “[t]he Board does not need to rely on the admitted prior art in order to find obviousness for all the claims”). Accordingly, we do not rely on the ’524 patent’s disclosure of any purported APA to support our decision.

electrical engineering, computer science, or computer engineering, or a related field, and 2 years' experience in the field of communications systems, including experience designing, operating, and/or implementing wired and wireless networks, or equivalent." Pet. 18 (citing Ex. 1003 ¶ 14). Petitioner also asserts that "[a]dditional education might substitute for some of the experience, and substantial experience might substitute for some of the educational background." *Id.*

Patent Owner asserts that a person of ordinary skill in the art at the time of the invention of the '524 patent would have had "a bachelor's or advanced degree in a discipline such as electrical engineering, computer engineering, or related disciplines, and having at least two years of practical experience in wired and wireless networks as well as experience in designing power meters (smart meters)."[4] Ex. 2001 ¶ 23.

Although there are slight differences between these definitions, the parties agreed that there is no meaningful distinction between them that would change the analysis as to patentability. Tr. 49–50, 62–63. We agree with the parties that there is no meaningful distinction between the definitions that changes our analysis. We also find that both definitions are consistent with the level of ordinary skill in the art reflected by the prior art of record. *See Okajima v. Bourdeau*, 261 F.3d 1350, 1355 (Fed. Cir. 2001); *GPAC*, 57 F.3d at 1579; *In re Oelrich*, 579 F.2d 86, 91 (CCPA 1978).

In light of the above, we can choose either definition as there is no meaningful distinction between them. We select Petitioner's articulation of

---

[4] Patent Owner at the hearing incorporated this definition for one of ordinary skill in the art into the record, without objection from Petitioner. *See* Tr. 50:3–25, 61:18–62:6.

the level of ordinary skill in the art because it was set forth in the Petition (Pet. 18) while Patent Owner's Response did not include Patent Owner's definition or a citation to Mr. Blackburn's corresponding testimony. Our analysis would not differ, however, if we selected Mr. Blackburn's definition.

B. Claim Construction

We interpret claims of an unexpired patent using the "broadest reasonable construction in light of the specification of the patent in which [the claims] appear[]." 37 C.F.R. § 42.100(b). Under that standard, claim terms are presumed to be given their ordinary and customary meaning, as would be understood by one of ordinary skill in the art, in the context of the entire disclosure. *In re Translogic Tech., Inc.*, 504 F.3d 1249, 1257 (Fed. Cir. 2007). Any special definition for a claim term must be set forth with reasonable clarity, deliberateness, and precision. *In re Paulsen*, 30 F.3d 1475, 1480 (Fed. Cir. 1994). Further, "[t]he [U.S. Patent and Trademark Office] should also consult the patent's prosecution history in proceedings in which the patent has been brought back to the agency for a second review." *Microsoft Corp. v. Proxyconn, Inc.*, 789 F.3d 1292, 1298 (Fed. Cir. 2015), *overruled on other grounds by Aqua Prods., Inc. v. Matal*, 872 F.3d 1290 (Fed. Cir. 2017).

In our Institution Decision, based on the claim language and prosecution history, we construed "autonomously" as meaning "without external prompting," as proposed by Petitioner. Inst. Dec. 6. Neither party has challenged that interpretation during the trial. *See* PO Resp. 7; Pet. Reply 7. We have further considered that construction in light of the arguments and evidence adduced at trial. In light of the foregoing, and for

the reasons stated in our Institution Decision, we maintain that construction based on the full record.

We determine that no other term in the challenged claims requires express construction for this Final Written Decision. *See Vivid Techs., Inc. v. Am. Sci. & Eng'g, Inc*., 200 F.3d 795, 803 (Fed. Cir. 1999) ("[O]nly those terms need be construed that are in controversy, and only to the extent necessary to resolve the controversy."); *see also Nidec Motor Corp. v. Zhongshan Broad Ocean Motor Co.*, 868 F.3d 1013, 1017 (Fed. Cir. 2017) (quoting *Vivid Techs*, 200 F.3d at 803).

C. Law for Demonstrating Obviousness

To prevail in challenging Patent Owner's claims, Petitioner must demonstrate by a preponderance of the evidence that the claims are unpatentable. 35 U.S.C. § 316(e); 37 C.F.R. § 42.1(d). "In an [*inter partes* review], the petitioner has the burden from the onset to show with particularity why the patent it challenges is unpatentable." *Harmonic Inc. v. Avid Tech., Inc.*, 815 F.3d 1356, 1363 (Fed. Cir. 2016) (citing 35 U.S.C. § 312(a)(3) (requiring *inter partes* review petitions to identify "with particularity . . . the evidence that supports the grounds for the challenge to each claim")). This burden of persuasion never shifts to Patent Owner. *See Dynamic Drinkware, LLC v. Nat'l Graphics, Inc.*, 800 F.3d 1375, 1378 (Fed. Cir. 2015) (citing *Tech. Licensing Corp. v. Videotek, Inc.*, 545 F.3d 1316, 1326–27 (Fed. Cir. 2008)) (discussing the burden of proof in *inter partes* review).

A claim is unpatentable under 35 U.S.C. § 103(a) if the differences between the claimed subject matter and the prior art are such that the subject matter, as a whole, would have been obvious at the time of the invention to a

person having ordinary skill in the art. *KSR Int'l Co. v. Teleflex, Inc.*, 550 U.S. 398, 406 (2007). The question of obviousness is resolved on the basis of underlying factual determinations including: (1) the scope and content of the prior art; (2) any differences between the claimed subject matter and the prior art; (3) the level of ordinary skill in the art; and (4) objective evidence of non-obviousness, if present.[5] *Graham v. John Deere Co.*, 383 U.S. 1, 17–18 (1966).

IV. OBVIOUSNESS OVER SUH

Petitioner contends claims 17–22 of the '524 patent are unpatentable under 35 U.S.C. § 103(a) as obvious over Suh. Pet. 3, 14–16, 18–47; Pet. Reply 6–21. Petitioner provides detailed analysis, which is supported by citations to Suh and the testimony of Dr. Akl, explaining how Suh teaches the limitations of the challenged claims.

Patent Owner opposes (*see* PO Resp. 8–17), arguing that Suh does not teach all of the elements of independent claim 17. Patent Owner's arguments are supported by the testimony of Mr. Blackburn.[6]

---

[5] Patent Owner does not present arguments or evidence of such objective evidence of non-obviousness in its Response. *See generally* PO Resp. 8–17.

[6] Petitioner argues that Patent Owner inappropriately attempts to incorporate by reference the entirety of Mr. Blackburn's Declaration (Ex. 2001) and Supplemental Declaration (Ex. 2002). Pet. Reply 4 (citing PO Resp. 12). We agree that such incorporation is not permitted. *See* 37 C.F.R. § 42.6(a)(3) ("*Incorporation by reference; combined documents.* Arguments must not be incorporated by reference from one document into another document. Combined motions, oppositions, replies, or other combined documents are not permitted."). Accordingly, we only address specific citations by Patent Owner to Mr. Blackburn's declarations.

We have reviewed the parties' arguments and the evidence of record. For the reasons that follow, we determine that Petitioner has shown by a preponderance of the evidence that the subject matter of claims 17–22 would have been obvious over Suh.

A. Summary of Suh

Suh describes "[a]n [I]nternet ready electronic power meter with automatic reporting capabilities, the electronic power meter recording electrical power usage and other utility usage, and periodically transmitting utility usage reports to a remote site using [I]nternet and conventional protocols of the public or private computer network." Ex. 1006, Abstract; *see also id*. ¶ 11 ("In the invented [I]nternet ready electronic meter an automated meter reading module is coupled with a communications module to read, record and transmit data to a remote site."). Suh's Figure 1 is reproduced below.

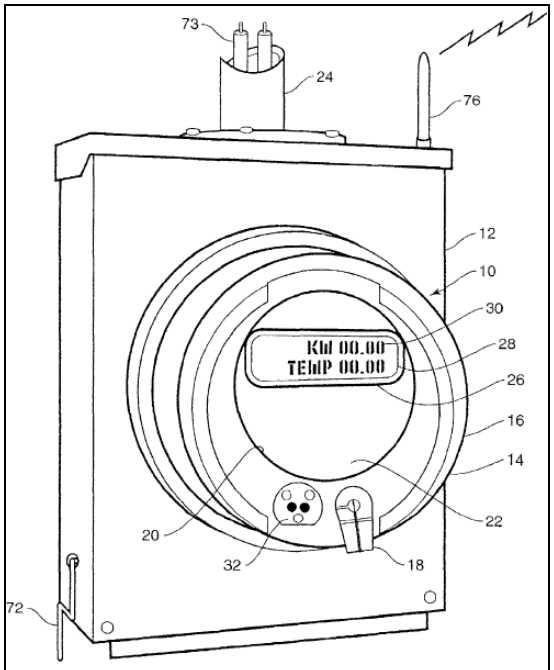

FIG. 1

Figure 1 illustrates a perspective view of Suh's electronic power meter in a cylindrical housing. *Id.* ¶ 15. Suh's "meter . . . incorporates a communication component that enables the electronic meter to communicate in a dedicated local area network (LAN) or wide area network (WAN) including a public or private network, such as the [I]nternet." *Id.* ¶ 8. More specifically, Suh's meter "includes the communication components necessary to communicate by telephone line, *power line* or wireless communication systems to periodically transfer collected data to a remote site." *Id.* (emphasis added). For example, Suh's meter can include a modem "*connected to the international computer network* 70 *via* communication lines 72, *power line 73 using developed data transmission overlay technologies* or, using a transceiver 74 via airway transmissions through an antenna 76." *Id.* ¶ 30 (emphases added); *see also id.* ¶ 8 (stating that the Internet is "also called the world wide international computer network"). "In the customary system, multiple meters . . . communicate with a remote host 176 typically through a dial up modem pool 178 through one or more of the multiple communication pathways 72, 73 or 76 shown with reference to F[igure] 1." *Id.* ¶ 51.

B. Independent Claim 17

Petitioner provides detailed analysis explaining how Suh teaches the limitations recited in independent claim 17, and providing a rationale for why a person having ordinary skill in the art would have combined the relevant features of Suh's embodiments. Pet. 18–47. Patent Owner disputes that Suh teaches the last element of claim 17 (i.e., "transmitting the IP-based power consumption information from the processor to a destination autonomously in IP format over an external power line network"), arguing

that a person having ordinary skill in the art would not have combined the features of Suh's embodiments as needed to teach the last element. PO Resp. 8–17. Patent Owner also argues that Suh would not have enabled such a combined embodiment. *Id.* at 1, 9–12.

1. Preamble

The preamble of claim 17 is "[a] method of measuring power consumption information on a power line." Ex. 1001, 10:48–49. The parties do not address whether the preamble is limiting, although Petitioner does provide argument and detailed citations showing that the preamble is taught by Suh. Pet. 18–19 (citing Ex. 1006 ¶¶ 2, 26). Patent Owner does not dispute this showing.

Suh describes a meter that periodically reads its meter chip that is connected to a power supply and measures voltage and current of the power supply. Ex. 1006 ¶ 2 ("This invention relates to a power supply meter . . . that records the rate of electronic power usage . . . ."), ¶ 26 ("The microprocessor 36 coordinates periodic readings of the meter chip 42 connected to the power supply 24 to generate digital representations of the voltage 44 and current 46, as schematically illustrated.").

Based on the disclosures from Suh, we find that Suh teaches measuring power consumption information on a power line. Our finding is further supported by Dr. Akl's declaration testimony that concludes these passages from Suh teach that "the meter 10 is connected to the power supply (i.e., the power line 73) and records the rate of electronic power usage by reading the commercially available AC meter chip, which itself measures the

voltage and current on the AC power supply." Ex. 1003 ¶ 127 (citing Ex. 1006 ¶¶ 2, 26); *see also* Pet. 18–19 (quoting Ex. 1003 ¶ 127[7]).

As we find that Suh teaches the preamble, we need not determine whether the preamble is limiting.

2. Measuring Current Fluctuations

Claim 17 recites "measuring current fluctuations in the power line." Ex. 1001, 10:51. We agree with Petitioner that Suh teaches this limitation. Figure 2,[8] shown below, illustrates a power meter, in accordance with Suh's invention.

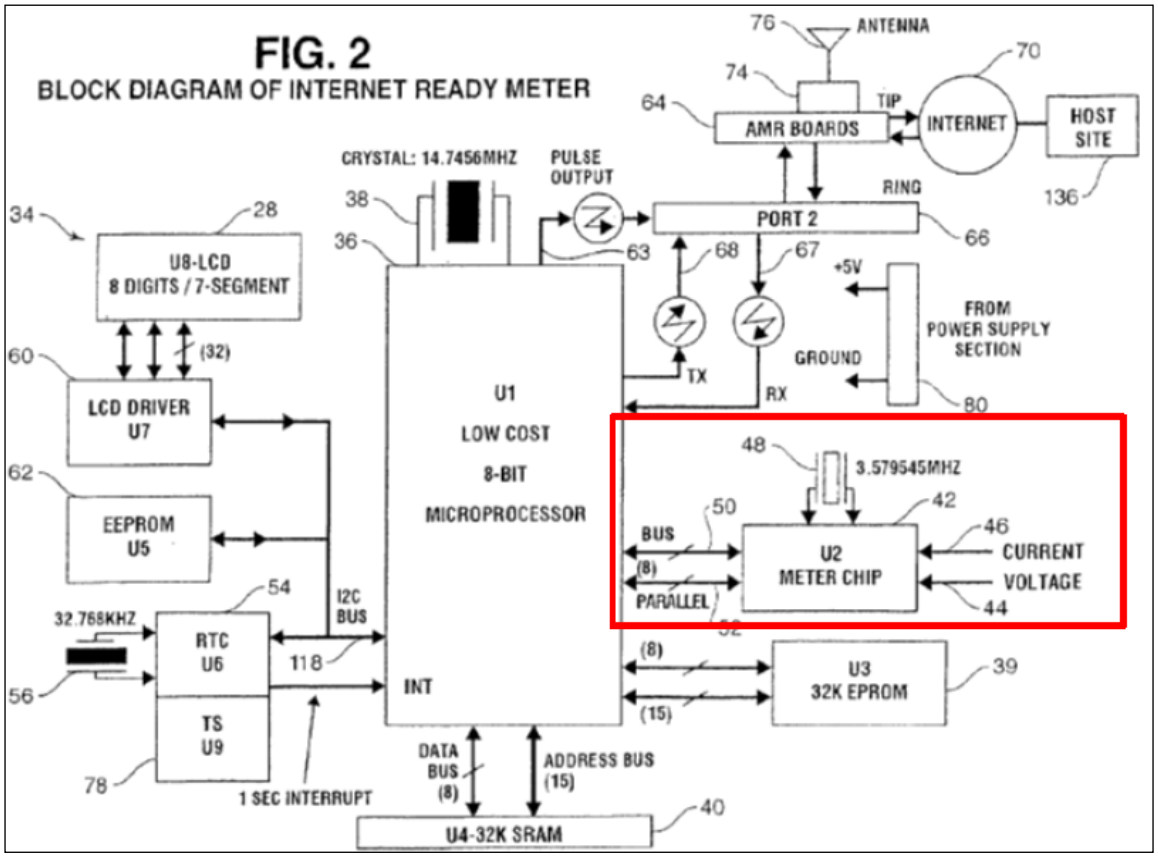

[7] Petitioner quotes Exhibit 1003, paragraph 127 but cites to paragraph 126. Pet. 18–19.

[8] This annotated version of Figure 2 was taken from the Petition. Pet. 22.

"F[igure] 2 is a schematic block diagram of [Suh's] electronic power meter showing data collection and communication circuits." Ex. 1006 ¶ 16. The data collection circuits include "meter chip 42 [which is] connected to the power supply 24 [(not shown)] to generate digital representations of the voltage 44 and current 46." *Id.* ¶ 26; *see also* Pet. 21–22 (citing Ex. 1006 ¶ 26, Fig. 2). Suh also teaches that "microprocessor 36 coordinates periodic readings of the meter chip 42 . . . [via] data lines 50 and 52 [which] feed[] data to the microprocessor 36." Ex. 1006 ¶ 26. "[M]icroprocessor 36 . . . [also acquires] the time . . . when reading the current power usage data generated by the meter chip 42." *Id.* ¶ 31; *see also* Pet. 21–22 (citing Ex. 1006 ¶ 31).

In addition, Dr. Akl testified in his declaration that "meter chip 42 measures the current fluctuations of the AC power line, where AC stands for alternating current, to determine the amount of power consumed," and that a person having ordinary skill in the art "would have understood that measuring current over time constitutes measuring current fluctuations (*i.e.,* the alternating current waveform) to generate power usage information." Ex. 1003 ¶¶ 129–130; *see also* Pet. 22 (citing Ex. 1003 ¶¶ 129–130). Dr. Akl's deposition testimony also supports that Suh teaches the limitation. Ex. 2003, 39:11–17 (referring to Suh's Figure 2, "the meter that chip is measuring fluctuations of the current and voltage and producing digital representations of those values. That's what the meter chip is doing.").

Based on the disclosures from Suh and Dr. Akl's testimony, we find that Suh teaches "measuring current fluctuations in the power line."

3. Calculating Power Consumption Information

Claim 17 also recites "calculating power consumption information from the current fluctuations in a processor." Ex. 1001, 10:52–53. We agree with Petitioner that Suh teaches this limitation. Suh teaches that microprocessor 36 periodically reads "meter chip 42 connected to power supply 24 to generate digital representations of the voltage 44 and current 46." Ex. 1006 ¶ 26, Fig. 2; *see also* Pet. 21–23 (citing Ex. 1006 ¶ 26, Fig. 2). More specifically, Suh describes reading "energy pulses" from the meter chip. Ex. 1006 ¶ 44, Fig. 5 (labeling block 122 with "read energy pulses from meter chip") (capitalization omitted); *see also* Pet. 23 (citing Ex. 1006 ¶ 41, Fig. 5). Suh teaches that these energy pulses are used to calculate the measured kWh. *E.g.*, Ex. 1006 ¶¶ 26, 41–43, Fig. 5 (block 128, "PREPARE DATA []KW/H").

In addition, Dr. Akl opines that a person having ordinary skill in the art "would have understood that the microprocessor 36 would use the measured current and voltage information to generate the rate of power usage." Ex. 1003 ¶ 133; *see also* Pet. 23–24 (citing Ex. 1003 ¶ 133). We credit Dr. Akl's testimony as it is consistent with Suh's disclosure of "microprocessor 36 . . . handl[ing] the operations and tasks of the meter." Ex. 1006 ¶ 26. Suh further teaches that "microprocessor 36 . . . ha[s] . . . a fixed memory 39 for programmed control instructions and a random memory 40 for data storage[, of] . . . the meter readings and other information used in creating data records or specialty features of the electronic power meter 10." *Id.*

Based on the disclosures from Suh and Dr. Akl's testimony, we find that Suh teaches generating (i.e., calculating) in the meter's microprocessor

the rate of power usage (i.e., power consumption information) using the measured current fluctuations. *See id.* ¶ 26, Figs. 2, 5; Ex. 1003 ¶ 133; *see also* Section IV(B)(2) *supra* (describing measuring the current fluctuations). In other words, we find that Suh teaches "calculating power consumption information from the current fluctuations in a processor."

4. Converting Into IP-Based Power Consumption Information

Claim 17 also recites "converting the power consumption information into IP-based power consumption information in the processor." Ex. 1001, 10:54–55. We agree with Petitioner that Suh teaches this limitation. Suh teaches that the "electronic power meter [sends] . . . data records including the kilowatt hour usage rate . . . *as an e-mail* . . . using standard international computer network protocols." Ex. 1006 ¶ 35 (emphasis added); *see also* Pet. 26 (citing Ex. 1006 ¶¶ 35–36, Fig. 4). Figure 4,[9] shown below, illustrates Suh's power meter as a client/sender of the data records. Ex. 1006 ¶ 35.

[9] This annotated version of Figure 4 was taken from the Petition. Pet. 26.

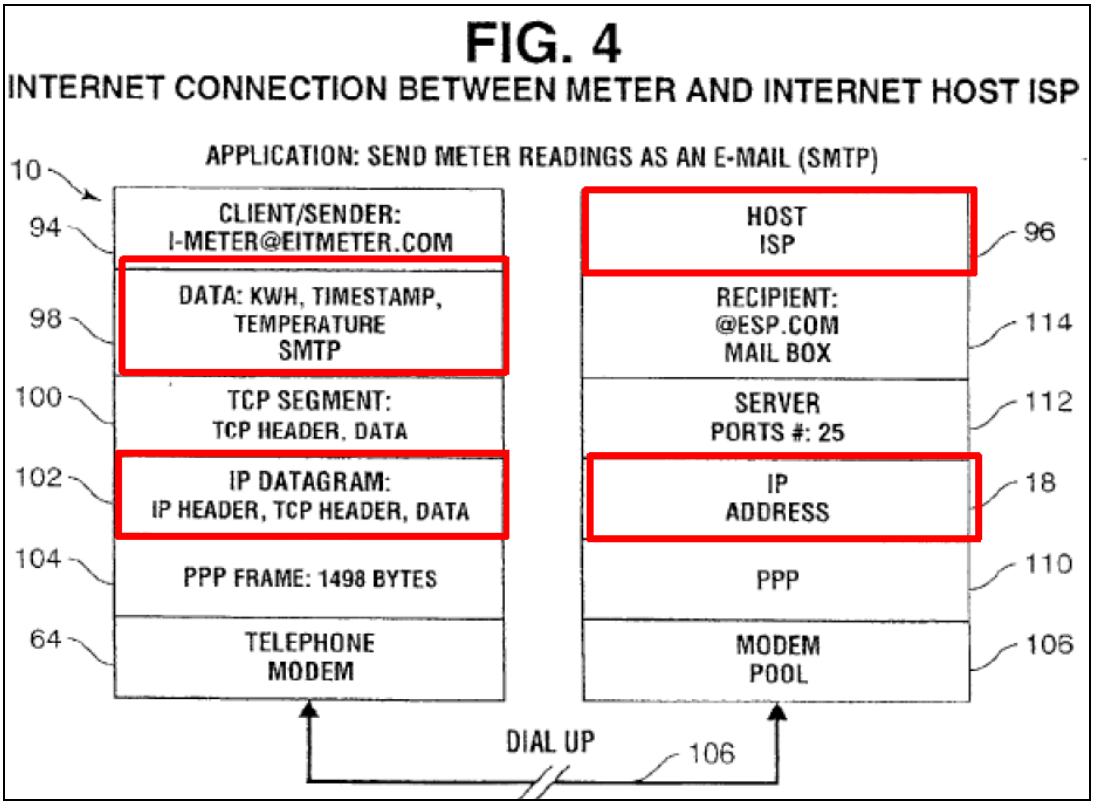

Figure 4 "is a schematic block diagram of the communication protocol of the electronic power meter for communicating data to a remote site" using a telephone line. *Id.* ¶ 18, Fig. 4. As part of that process, and as shown in Figure 4, a "TCP (Transmission Control Protocol) header" (block 100) and "a IP (Internet Protocol)" header (block 102) are added to encapsulate the email, forming an "IP datagram[, which] . . . includ[es] the IP header, the TCP header[,] and the data," e.g., kWh (block 98). *Id.* ¶¶ 35–36, Fig. 4. Suh also teaches that microprocessor 36 has fixed memory 39 that contains "the [I]nternet protocols such as TCP/IP." *Id.* ¶ 26.

In addition, Dr. Akl testified that Suh teaches "microprocessor 36 converts the power consumption information (for example, the kilowatt hour usage) it receives from meter chip 42 into IP-based power consumption information by adding the IP (Internet Protocol) header to the data itself."

Ex. 1003 ¶ 140 (citing Ex. 1006 ¶ 35, Fig. 4); *see also* Pet. 25 (citing Ex. 1003 ¶ 140). We credit Dr. Akl's testimony, as it is consistent with Suh's teachings discussed above.

Based on the disclosures from Suh and Dr. Akl's testimony, we find that Suh teaches "converting the power consumption information into IP-based power consumption information in the processor."

5. Transmitting Autonomously in IP Format Over an External Power Line Network

Claim 17 recites "transmitting the IP-based power consumption information from the processor to a destination *autonomously* in *IP format* over an *external power line network*." Ex. 1001, 10:57–59 (emphases added). Petitioner argues that Suh discloses this limitation by combining features of Suh's embodiment that uses a telephone line to communicate with Suh's teaching of using a power line to communicate. Pet. 27–32. Patent Owner argues that Suh (i) teaches away from combining features of Suh's telephone line and power line embodiments as needed to teach the limitation, and (ii) would not have enabled the combined embodiment. *See* PO Resp. 8–17.

We address below how Suh teaches combining the relevant features of its embodiments to teach transmitting the IP-based power consumption information, where (i) the power consumption information is in *IP format*, (ii) the transmission occurs *autonomously*, and (iii) the transmission is over an *external power line network*. We also address Patent Owner's argument, with which we disagree, that Suh would not have enabled the combined embodiment.

i. IP Format

We agree with Petitioner that Suh teaches transmitting IP-based power consumption information from the processor to a destination in *IP format* over an external network. Pet. 27–31; Pet. Reply 6. Suh's "invention relates to . . . an [I]nternet ready electronic power meter for residential or commercial use that records the rate of electronic power usage and communicates the usage rate to a remote site." Ex. 1006 ¶ 2. Suh also teaches that its "[I]nternet ready electronic power meter . . . incorporates a communication component that enables the electronic meter to communicate in a . . . wide area network (WAN) . . . such as the [I]nternet." *Id.* ¶ 8. In addition, Dr. Akl testified that a person having ordinary skill in the art "would have understood [that the Internet] is an IP-based network." Ex. 1003 ¶ 154; *see also* Pet 31 (citing Ex. 1006 ¶¶ 2, 8; Ex. 1003 ¶ 154). Hence, we find that Suh teaches that power consumption information (e.g., "rate of electronic power usage") is in IP format because it is being sent over the Internet, which is an IP-based network. Suh also teaches that the transmission is over an external network as the Internet is external to (i.e., on the distribution grid side of) the meter and dwelling.

Furthermore, a second way Suh teaches IP format is via Suh's teaching of transmitting "data records including the kWh usage rate" (i.e., power consumption information) as an *IP datagram* (encapsulating an e-mail) over a telephone line to a host Internet Service Provider ("ISP"). Ex. 1006, ¶¶ 35–36, Fig. 4; *see also* Pet. 28 (citing Fig. 4). Suh also teaches that its "power meter includes the communication components necessary to communicate . . . to . . . transfer collected data to a remote site." Ex. 1006 ¶ 8. For example, as illustrated in Figure 2, Suh teaches that

"microprocessor 36 is operably connected to a modem 64 . . . via ports 66 to the microprocessor input 67 and output 68." *Id.* ¶ 30, Fig. 2. Suh also teaches that "modem 64 is . . . connected to the international computer network 70[, and the] . . . power meter is able to connect directly to any ISP of any web site." *Id.* Hence, Suh teaches that the power consumption information is transmitted in IP format from the processor to a destination over an external network. *See id.*; *see also* Section IV(B)(4) (describing the processor's operations).

In addition, Dr. Akl testified that "Suh teaches that power measurement information is transmitted in email format . . . over a TCP/IP connection by attaching IP headers to the power measurement data—for example, kilowatt-hour usage." Ex. 1003 ¶ 154 (citing Ex. 1006, Figs. 4–5); *see also* Pet. 28 (citing Ex. 1003 ¶ 154). Dr. Akl concludes that "this power measurement information is IP-based power measurement information because it is stored in a payload data block of an IP packet." Ex. 1003 ¶ 154. Patent Owner's expert, Mr. Blackburn, also agrees that Suh "discloses transmitting IP-based power-consumption information," and that "the information is transmitted in IP format from a processor to a destination." Ex. 1019 (Blackburn Depo.), 21:3–11; *see also* Pet. Reply 6 (citing Ex. 1019, 21:3–11).

Based on the disclosures from Suh, and Dr. Akl's and Mr. Blackburn's testimony, we find that Suh teaches "transmitting the IP-based power consumption information from the processor to a destination . . . in IP format over an external . . . network." This recitation of the limitation omits "autonomously" and that the external network is "power line," which we address below.

ii. Autonomously

We agree with Petitioner that Suh teaches that the transmission of IP-based power consumption information from the processor to a destination in IP format over an external network (*see* Section IV(B)(5)(i) *supra*) can occur *autonomously*. *See* Pet. 27–30. Suh teaches that its "[I]nternet ready electronic power meter [can have] . . . automatic reporting capabilities, . . . periodically transmitting utility usage reports to a remote site using [I]nternet and conventional protocols." Ex. 1006, Abstract. To this end, Suh teaches that its power meter's "real time clock chip 54 is . . . set . . . [so d]ata polling occurs each minute and [the data is] processed for transmission each hour." *Id.* ¶ 40; *see also* Pet. 29–30 (citing Ex. 1006 ¶¶ 40–42, Fig. 5).

Figure 5,[10] shown below, is a flow chart illustrating this data collection and transmission process over a telephone line, in accordance with Suh's invention. Ex. 1006 ¶ 19.

[10] This annotated version of Figure 5 was taken from the Petition. Pet. 29.

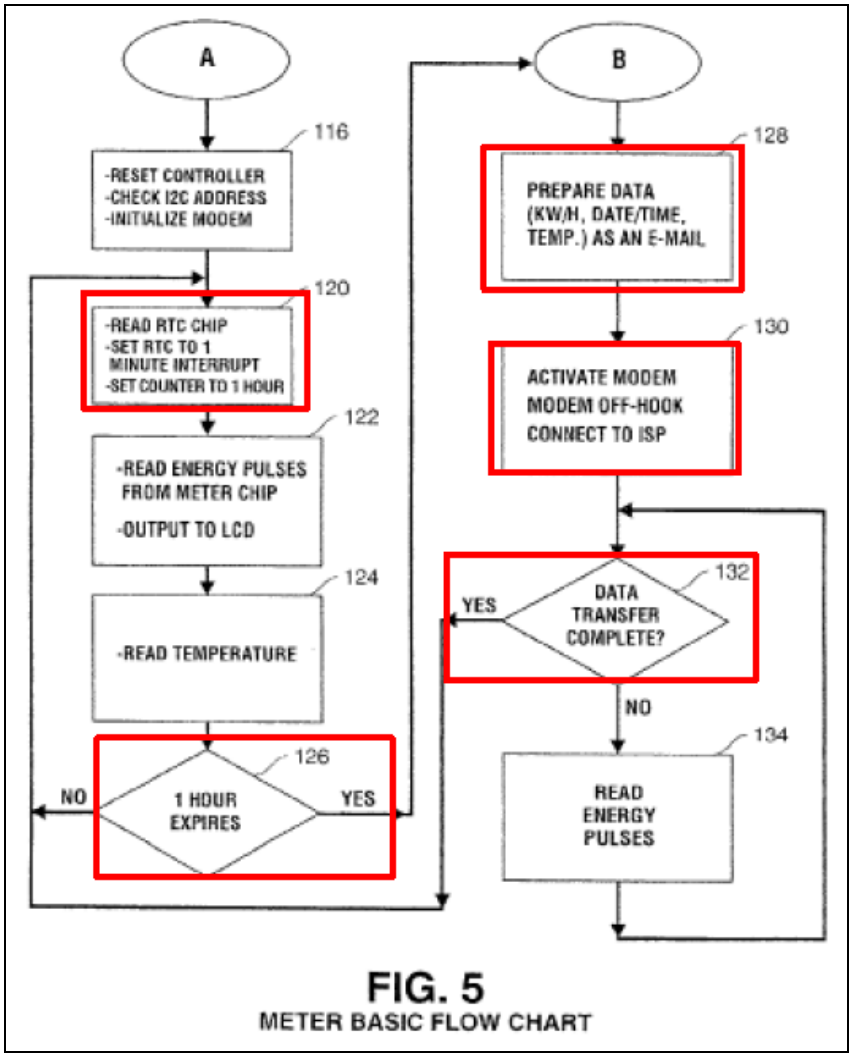

FIG. 5
METER BASIC FLOW CHART

Figure 5 illustrates Suh's "basic process for collecting, storing and transmitting data by the electronic power meter . . . . In column A the internal reading and data collection routine is outlined. In column B the data transmission and storage routine is outlined." Ex. 1006 ¶ 39. "In block 122 the output of the meter chip 42 is read." *Id.* ¶ 41. "At decision diamond 126 the counter is checked to determine if one hour has expired. . . . If yes, the collected data is prepared for messaging to the data collection center, that is the host ISP 96." *Id.* ¶ 42. More specifically, "the data collected is prepared as an e-mail package in block 128. In block 130, the modem is activated and

an off-hook connect to the ISP is effected. At decision diamond 132 it is determined if the data transfer was successfully completed." *Id.* ¶¶ 43–44. In other words, the power consumption data collected by meter chip 42 every minute is prepared for messaging and transmitted to a data collection center every hour. *Id.* ¶¶ 41–42. We find that this transmission occurs based on the power meter's internal real time clock chip, and hence occurs *without external prompting* (i.e., autonomously). *See id.* ¶¶ 41–44, Figs. 4–5; *see also* Section III(B) (construing autonomously); Inst. Dec. 6 (same). Our finding is further supported by Dr. Akl's declaration testimony that concludes that these transmissions occur "*automatically* every hour" and "without external prompting because they simply rely on an internal real-time clock chip 54." Ex. 1003 ¶ 153 (citing Ex. 1006 ¶¶ 40–42); *see also* Pet. 27 (citing Ex. 1003 ¶ 153).

Based on the disclosures from Suh, and Dr. Akl's testimony, we find that Suh teaches "transmitting the IP-based power consumption information from the processor to a destination autonomously in IP format over an external . . . network." Our recitation of the limitation omits that the external network is "power line," which we address below.

iii. Over an External Power Line Network

We agree with Petitioner that Suh teaches that transmitting power consumption information from the processor to a destination can occur over *an external power line network*. Pet. 27, 30–32. Suh teaches that its "power meter includes the communication components necessary to communicate by . . . power line . . . to periodically transfer collected data to a *remote site*." Ex. 1006 ¶ 8 (emphasis added). For example, Suh teaches that "microprocessor 36 is operably connected to a modem 64 [that can be] . . .

line connected to the international computer network 70 [(i.e., the Internet)] via . . . power line 73 using developed data transmission overlay technologies," so that the "power meter is able to connect directly to any ISP of any web site." *Id.* ¶ 30, Fig. 2; *see also id.* ¶ 51 (teaching that Suh's power meter can "communicate with a remote host . . . through a dial up modem pool 178 through one or more of the multiple communication pathways 72, 73 or 76 shown with reference to F[igure] 1"); *Id.* at Fig. 1 (illustrating that communication pathway 73 is power line); Pet. 31 (citing Ex. 1006 ¶¶ 8, 30, 51; Ex. 1003 ¶ 155).

In addition, Dr. Akl testified that Suh's:

> IP datagram may optionally be sent over power line communication systems to the data collection center, which would have, at least in some cases, involved transmission over a power line network external to the building where the power meter is located. . . . Suh teaches that communications may occur with the remote host via power line communications and that any of the suggested physical network types could be used to transmit data.

Ex. 1003 ¶ 155 (citing Ex. 1006 ¶¶ 30, 51); *see also* Ex. 2003 (Akl Depo.), 50:6–51:20 (testifying that Suh discloses different ways to communicate, including power line communications). Patent Owner's expert, Mr.

Blackburn,[11] agreed that Suh's "modem 64 is not limited to just a telephone modem" and "could be a power-line communications modem." Ex. 1019 (Blackburn Depo.), 23:18–23; *see also* Pet. Reply 7 (citing same).

Based on the disclosures from Suh, and Dr. Akl and Mr. Blackburn's testimony, we find that Suh teaches transmitting IP-based power consumption information to a destination in IP format over an external power line network.

iv. Combining Suh's Embodiments

Petitioner argues that Suh renders claim 17 obvious. In so doing, Petitioner also must show sufficient rationale to establish that one of ordinary skill in the art would have found it obvious to combine Suh's teachings (i.e., features of the telephone line and power line embodiments) to teach the last element of claim 17. *See Monsanto Tech. LLC v. E.I. DuPont de Nemours & Co.*, 878 F.3d 1336, 1346 (Fed. Cir. 2018).

We find that Petitioner has demonstrated by a preponderance of the evidence that one of ordinary skill in the art would have found it obvious to modify Suh's telephone line embodiment (*see* Sections IV(B)(5)(i)–(ii) *supra*) to use Suh's teaching of an external power line network (*see* Section

---

[11] The parties dispute whether Mr. Blackburn admitted that Suh's paragraph 8 discloses transmitting power consumption information from Suh's power meter to a remote site over an *external* power-line network. Obs. 3 (citing Ex. 1019, 28:8–16) (arguing that Mr. Blackburn corrected his earlier testimony because he did not hear the word "external"); Pet. Reply 3–4 (citing Ex. 1019, 22:17–23:8), 11–12 (citing Ex. 1019, 28:12–16) (arguing "[o]n redirect, Mr. Blackburn incredibly stated that 'I didn't hear the [word] 'external,' and attempted to recant his testimony"). We need not, and thus do not reach, this dispute, as we rely directly on Suh's cited teachings, Dr. Akl's testimony, and the other cited testimony from Mr. Blackburn.

IV(B)(5)(iii) *supra*) to teach "transmitting the IP-based power consumption information from the processor to a destination autonomously in IP format over an external power line network" (i.e., claim 17's last element). *See* Pet. 27–32 (citing 1006 ¶¶ 8, 30, 51; Ex. 1003 ¶ 156). We agree with Petitioner and find that Suh repeatedly teaches that a skilled artisan could choose from a telephone line, power line, or wireless communication system to connect to a remote data collection site. Ex. 1006 ¶¶ 8 ("The invented electronic power meter includes the communication components necessary to communicate by telephone line, power line or wireless communication systems to periodically transfer collected data to a remote site."), 30 ("[M]odem 64 is either line connected to the international computer network 70 via communication lines 72, power line 73 using developed data transmission overlay technologies or, using a transceiver 74 via airway transmissions through an antenna 76 . . . ."), 51 ("In the customary system, multiple meters . . . communicate with a remote host 176 typically through a dial up modem pool 178 through one or more of the multiple communication pathways 72, 73 or 76 . . . .").

We also find persuasive Dr. Akl's testimony. Dr. Akl testified that:

> In the email messaging system disclosed in Figure 4 of Suh, the lowest layer discloses an embodiment that uses a telephone modem. However, a [person having ordinary skill in the art] would have understood that the patentees intended that any of the suggested physical layer communication networks, including a power line communications modem, could be substituted into Figure 4 without altering any other steps of that Figure. That is, the system would still communicate power measurement data over a TCP/IP connection, but that connection would be carried over a power line rather than a phone line.

Ex. 1003 ¶ 156. Dr. Akl's testimony comports with the express description in Suh that different communication pathways can be chosen to communicate with the remote site.

In addition, we disagree with Patent Owner (PO Resp. 12–16 (citing Ex. 1006 ¶¶ 35–36, 40–42, 44, Figs. 4–5)) that Suh teaches away from modifying its telephone line embodiment to transmit data in IP format autonomously over an external *power line* network because Suh's Figures 4 and 5, and the corresponding discussion in Suh, disclose using a telephone line—not a power line. A reference teaches away from a claimed invention if it criticizes, discredits, or otherwise discourages modifying the reference to arrive at the claimed invention. *In re Fulton*, 391 F.3d 1195, 1201 (Fed. Cir. 2004) ("The prior art's mere disclosure of more than one alternative does not constitute a teaching away from any of the[] [disclosed] alternatives because such disclosure does not criticize, discredit, or otherwise discourage the solution claimed . . . ."). Suh's selection of one type of communication pathway (i.e., telephone line) for an embodiment merely teaches one alternative and does not criticize, discredit, or otherwise discourage using an external power line network instead, especially in light of Suh's teachings (Ex. 1006 ¶¶ 8, 30, 51) that the different communication pathways can be substituted for one another. *See Fulton*, 391 F.3d at 1201; *see also KSR*, 550 U.S. at 417 ("If a person of ordinary skill can implement a predictable variation, § 103 likely bars its patentability.").

Similarly, we disagree with Patent Owner (PO Resp. 14 (citing Ex. 1006 ¶ 45)) that Suh teaches away from modifying its telephone line embodiment to transmit over an external power line network instead because Suh teaches that "in areas where use of telephone lines are impractical or

unavailable, the data transmission may be performed by wireless communication systems." Ex. 1006 ¶ 45. This teaching from Suh does not criticize, discredit, or otherwise discourage using power lines with any of Suh's embodiments. Rather, at most, it teaches that for certain applications (i.e., where line communication is impractical or unavailable) wireless communication *may* be preferable. *Id.*; *see also Galderma Labs., L.P. v. Tolmar, Inc.*, 737 F.3d 731, 738 (Fed. Cir. 2013) ("A reference does not teach away . . . if it merely expresses a general preference for an alternative invention but does not criticize, discredit, or otherwise discourage investigation into the invention claimed.") (citation omitted).

We also disagree with Patent Owner's argument that Suh teaches away from modifying its telephone line embodiment to transmit over a power line instead because such a combination would produce *an inoperative device*. *See* PO Resp. 14–15 (citing *In re Sponnoble*, 405 F.2d 578, 587 (CCPA 1969); *In re Gordon*, 733 F.2d 900, 902 (Fed. Cir. 1984); *McGinley v. Franklin Sports, Inc.*, 262 F.3d 1339, 1354 (Fed. Cir. 2001)). More specifically, Patent Owner argues Suh teaches away from using power line with the features of Suh's telephone line embodiment because "a 'dial up modem' cannot be used over a power line." *Id.* at 14 (citing Ex. 2001 ¶ 59); *see also* Ex. 2001 ¶ 59 ("It is my opinion that although elements of the system can be modified, the modification must comport with a functioning system. . . . A [person having ordinary skill in the art] would understand that a 'dial up modem' cannot be used over a power line.").

First, we credit Dr. Akl's declaration and deposition testimony that different types of modems would have been used to communicate IP datagrams over different transmission pathways, including telephone lines,

power lines, and wireless communications. Ex. 1003 ¶ 156 (Dr. Akl testifying that one of ordinary skill in the art "would have understood that the patentees intended that any of the suggested physical layer communication networks, including a power line communications modem could be substituted [for the telephone modem of] Figure 4 of Suh without altering any other steps of that Figure"); Ex. 2003, 50:6–51:20 (Dr. Akl testifying different types of modems can be used to communicate IP datagrams over different transmission pathways, including telephone lines, power lines, and wireless communications); *see* Pet. Reply 20–21 (citing Ex. 1003[12] ¶ 156; Ex. 2003, 50:6–51:20). Dr. Akl's testimony comports with Suh's disclosure that a skilled artisan could choose from a telephone line, power line, or wireless communication system to connect to a remote data collection site. Ex. 1006 ¶¶ 8, 30, 51. Second, Patent Owner's expert, Mr. Blackburn, also testified in his deposition that modem 64 "is not limited to just a telephone modem," and could be "a power-line communications modem." Ex. 1019, 23:18–23; *see also* Pet. Reply 21 (quoting Ex. 1019, 23:9–23). This also undermines Patent Owner's argument that the features of Suh's telephone line embodiment could not be performed using a power line.

Furthermore, contrary to Patent Owner's argument, "it is not necessary that [Suh's embodiments] be physically combinable to render obvious the ['524 patent]." *Allied Erecting & Dismantling Co. v. Genesis Attachments, LLC*, 825 F.3d 1373, 1381 (Fed. Cir. 2016) (quoting *In re*

---

[12] In context, we understand Petitioner's cite to Exhibit 1006 (Suh) to be a cite to Exhibit 1003 (Dr. Akl's Declaration).

Sneed, 710 F.2d 1544, 1550 (Fed. Cir. 1983)); *see also id.* (quoting *In re Etter*, 756 F.2d 852, 859 (Fed. Cir. 1985) (en banc)) ("Etter's assertions that Azure cannot be incorporated in Ambrosio are basically irrelevant, the criterion being not whether the references could be physically combined but whether the claimed inventions are rendered obvious by the teachings of the prior art as a whole."). "The test for obviousness is not whether the features of a secondary reference may be bodily incorporated into the structure of the primary reference." *Id.* (quoting *In re Keller*, 642 F.2d 413, 425 (CCPA 1981)) (other citations omitted). Rather, the test is "whether 'a skilled artisan would have been motivated to combine the teachings of the prior art references to achieve the claimed invention.'" *Id.* (quoting *Pfizer, Inc. v. Apotex, Inc.*, 480 F.3d 1348, 1361 (Fed. Cir. 2007)).

Patent Owner's argument unduly focuses on compatibility of a telephone modem with a power line, without acknowledging what Suh's combined teachings would have suggested to one of ordinary skill in the art. This is particularly true because Suh repeatedly indicates that a skilled artisan could choose from a telephone line, power line, or wireless communication system to connect to a remote data collection site. Ex. 1006 ¶¶ 8, 30, 51; *see also In re Urbanski*, 809 F.3d 1237, 1243–44 (Fed. Cir. 2016) (distinguishing *Sponnoble*, *Gordon*, and *McGinley* (the cases Patent Owner cites), and finding that there was no teaching away as the prior art references suggested the modification and did not teach that the modified process would be inoperable).

We also infer that Patent Owner makes a similar argument of teaching away based on inoperability with respect to Suh sending email messages over a power line. PO Resp. 12. More specifically, Patent Owner asserts

that "the 'IP' message cited by Petitioner requires encapsulation in an [Simple Mail Transfer Protocol ("SMTP")] message, which would be, even today, unrealistic based on the '14Mbit/s' transmission of a frame of 1500 bytes or less." *See id.* (citing Ex. 2002 ¶ 18[13]) (Mr. Blackburn testifying that "HomePlug[14] 1.0[] provides a peak PHY-rate of 14 Mbit/s. The HomePlug 1.0 MAC Layer transports data in a frame consisting of 46 to 1500 bytes long.").

We also disagree with this argument as it also incorrectly focuses on whether Suh's embodiments are physically combinable, rather than "whether 'a skilled artisan would have been motivated to combine the teachings of the prior art references to achieve the claimed invention.'" *Allied Erecting*, 825 F.3d at 1381 (citation omitted). This argument also ignores that Suh repeatedly indicates that a skilled artisan could choose from a telephone line, power line, or wireless communication system to connect to a remote data collection site. Ex. 1006 ¶¶ 8, 30, 51; *see also Urbanski*, 809 F.3d at 1243–44 (finding no teaching away as references suggest the modification). In addition, Mr. Blackburn testified as to the transmission parameters of HomePlug, but did not draw the conclusion (i.e., sending an email message would be unrealistic based on HomePlug's transmission parameters) set forth by Patent Owner. Rather, that conclusion is mere attorney argument

---

[13] Patent Owner quotes from paragraph 18 of Exhibit 2002, but cites to paragraph 19. PO Resp. 12.

[14] Petitioner admits that the X-10 and HomePlug protocols are redundant for our purposes, and that we do not need to discuss both. Tr. 19:15–20:19. Accordingly, we generally limit our discussion to HomePlug. Petitioner also submits that we do not need to discuss either X-10 or HomePlug, as Suh alone purportedly renders the challenged claims unpatentable. *Id.*

entitled to little weight. *See In re Geisler*, 116 F.3d 1465, 1470 (Fed. Cir. 1997) (explaining that attorney arguments and conclusory statements that are unsupported by factual evidence are entitled to little probative value).

v. Whether Suh Enables Transmitting IP Data Over an External Power Line Network

Patent Owner argues with respect to transmitting over an external power line network that Suh discloses "an idea, with no teaching of how such an invention would be implemented or used." PO Resp. 11. According to Patent Owner, "[n]owhere does Suh describe any mechanism by which one of ordinary skill could transmit data, much less IP-based data, over an external power line." *Id.* at 9–10. Rather, according to Patent Owner, Suh "acknowledges power line transmission over an external power line network is prospective in nature, using the word 'developed.'" *Id.* at 1.

We disagree with Patent Owner's arguments. It is well settled that a prior art patent is presumed to be enabled. *In re Antor Media Corp.*, 689 F.3d 1282, 1287–88 (Fed. Cir. 2012); *Amgen Inc. v. Hoechst Marion Roussel, Inc.*, 314 F.3d 1313, 1355 (Fed. Cir. 2003); *see also* Pet. Reply 8. Patent Owner does not acknowledge this presumption, much less come forward with sufficient argument or evidence to support its assertion that Suh is non-enabling to overcome the presumption. *See generally* PO Resp. 1–2, 9–13, 16–17.

We also disagree with Patent Owner (PO Resp. 1, 13) that Suh's use of the word "developed" (i.e., "using developed data transmission overlay technologies") is "prospective in nature," instead of referring to technologies that already existed. *See* Ex. 1006 ¶ 30 ("The modem 64 is either line connected to the international computer network 70 via communication lines 72, power line 73 using developed data transmission overlay

technologies or, using a transceiver 74 via airway transmission through an antenna 76, as also shown in F[igure] 1."). On its face, the adjective "developed" expresses a past state and is not prospective in nature. Besides being consistent with the word's customary usage, the evidence of record shows that at least two power line protocols already were developed before the invention of the '524 patent. *See, e.g.*, Ex. 1003 ¶ 73 (opining that power line protocols pre-existed the '524 patent); Ex. 1010 ("HomePlug 1.0.1 Specification" (Dec. 2001)); Ex. 1019, 16:21–17:14 (Mr. Blackburn testifying that the HomePlug power line protocol pre-existed the '524 patent's filing); Ex. 2002 ¶ 6 (Blackburn Suppl. Decl.) ("Prior to the ['524 patent's] filing date . . ., a [person having ordinary skill in the art] would have known and understood that two communications protocols were being used for PLC (Power Line Communications) - X-10 and HomePlug."); *see also* Pet. 5 (citing Ex. 1010), 14–16 (citing Ex. 1003 ¶ 73); Pet. Reply 2 (citing Ex. 1019, 16:21–17:22). In addition, Patent Owner's expert, Mr. Blackburn, admitted that Patent Owner "did not invent a specialized protocol for external power-line transmissions," nor "data transmissions over power lines." Ex. 1019, 17:18–22, 19:22–20:1; Pet. Reply 15–16 (citing same).

We also disagree with Patent Owner as to the import of whether "HomePlug w[as] **designed** for use only *within* a home." PO Resp. 12 (bold

emphasis added) (citing Ex. 2002 (Blackburn Supp. Decl.) ¶¶ 7–27[15]); *see also* Ex. 2002 ¶ 25 (testifying that a person having ordinary skill in the art "would have known that the transmission of signals external to a house would have been *unintentional*") (emphasis added). Regardless of HomePlug's design, a person having ordinary skill in the art, as discussed below, would have known that HomePlug would have transmitted data over an external power line network (e.g., between dwellings).

As the HomePlug Specification discloses, HomePlug "operat[es] on residential AC power lines carrying nominal AC voltages from 120 V to 240 V[,] . . . [and a]ll homes on a distribution transformer are electrically connected . . ., thus creating physically overlapping networks which must be logically separated." Ex. 1010 § 1.4; *see also id.* at Fig. 3 (illustrating the overall AC wiring topology characteristic of residential power distribution, where multiple homes share the same distribution transformer and are interconnected over the power lines). The HomePlug Specification further

---

[15] Petitioner argues that Mr. Blackburn's statements in paragraphs 7–27 of his Supplemental Declaration (Ex. 2002) are not discussed in Patent Owner's Response, and thus, should not be considered by the Board. *See* Pet. Reply 5 (citing *Cisco Sys., Inc. v. C-Cation Techs., LLC*, Case IPR2014-00454, slip op. at 7–11 (PTAB Aug. 29, 2014) (Paper 12) (informative) ("The practice of citing the Declaration to support conclusory statements that are not otherwise supported in the Petition also amounts to incorporation by reference.")); *Cf. DeSilva v DiLeonardi*, 181 F.3d 865, 866–67 (7th Cir. 1999) ("A brief must make all arguments accessible to the judges, rather than ask them to play archaeologist with the record."). We agree with Petitioner that Patent Owner's Response (PO Resp. 12) cites paragraphs 7–27 in a conclusory fashion without further support in the Response, other than as to paragraph 18. Thus, we generally do not address these paragraphs, save a few that appear relevant to our understanding of Patent Owner's arguments as to HomePlug.

discloses that "stations in one dwelling might be able to communicate with stations in another dwelling." *Id.* § 3.2.1. Accordingly, one of ordinary skill in the art would have known that HomePlug would communicate over power lines (e.g., between dwellings) for an external network, as explicitly directed to do by Suh, regardless of whether HomePlug's design was to operate within a home. *Id.* §§ 1.4, 3.2.1, Fig. 2; *see also* Ex. 1006 ¶¶ 8, 30, 51, Fig. 1. Mr. Blackburn's Supplemental Declaration unduly focuses on HomePlug's purported design (i.e., designed for use within a home), rather than on HomePlug's teachings (e.g., transmission can occur between dwellings over the power line). *See generally* Ex. 2002 ¶¶ 7–27; *cf. In re Donohue*, 766 F.2d 531, 533 (Fed. Cir. 1985) ("It is not . . . necessary that an invention disclosed in a publication shall have actually been made in order to satisfy the enablement requirement.").

We also find Mr. Blackburn's discussion of masks (¶¶ 21–23) and a 56-bit Data Encryption Standard ("DES") (¶ 24) encryption process unavailing. Mr. Blackburn does not address, for example, how such masks or privacy encryption would be inapplicable to purposely transmitting data over an external (e.g., between dwellings) power line network, nor why a person having ordinary skill in the art would be prevented from implementing external power line transmissions using HomePlug or an obvious variant thereof. *See generally* Ex. 2002 ¶¶ 7–27.

Accordingly, for the above discussed reasons, we afford this testimony from Mr. Blackburn little weight. *See In re Acad. of Sci. Tech Ctr.*, 367 F.3d 1359, 1368 (Fed. Cir. 2004) ("[T]he Board is entitled to weigh the declarations and conclude that the lack of factual corroboration warrants discounting the opinions expressed in the declarations."). In

addition, Patent Owner does not explain why it references the ’524 patent’s filters, which are used to block signals, with respect to Suh’s enablement. *See* PO Resp. 17.

We also disagree with Patent Owner that “Dr. Akl admitted and testified that while . . . HomePlug w[as] known, using [i]t to communicate on an external power line network was not—at least until the application for the ’524 [p]atent was filed.” PO Resp. at 10–11 (citing Ex. 2003 (Akl Depo.), 63:24–64:3). Instead, Dr. Akl simply testified that “[t]he information disclosed in the [’]524 [patent] is consistent with what one of ordinary skill in the art would know about the X10 and the [H]ome[P]lug [protocols] and is consistent with my knowledge of those protocols.” Ex. 2003, 63:24–64:3. This testimony does not indicate that it was unknown to use HomePlug to communicate on an external power line network before the ’524 patent. *Id.*; *see also* Pet. Reply 16–17 n.5 (citing Ex. 2003 (Akl Depo.), 63:24–64:5).

Furthermore, we find inapposite Patent Owner’s argument that “the only ‘developed data transmission overlay technologies’ . . . Petitioner’s expert[, Dr. Akl,] can point to were those disclosed by the ’524 Patent (X.10 and Homeplug).” PO Resp. 1; *see also* Obs. 1 (citing Ex. 2003[16], 62:9–24) (making a similar argument). As discussed above, the evidence of record clearly shows that the HomePlug and X-10 power line protocols already were developed before the invention of the ’524 patent. *See, e.g.*, Ex. 1003 ¶ 73; Ex. 1010 (“HomePlug 1.0.1 Specification” (Dec. 2001)); Ex.

---

[16] Patent Owner’s Observations cite Dr. Akl’s deposition as Exhibit 1019, rather than the correct Exhibit number 2003. Obs. 1–2.

1019, 16:21–17:14 (Mr. Blackburn testifying that the HomePlug power line protocol pre-existed the ’524 patent’s filing). In addition the evidence of record shows that a person having ordinary skill in the art would have known of these two power line protocols before the ’524 patent’s filing. *See, e.g.*, Ex. 2003, 62:9–17 (stating that “[t]here was several known power line protocols. The 524 patent gives you examples that is prior art, examples of power line protocols include a home plug and include X10. So these are two examples that are actually disclosed in the 524 patent,” in response to the question of “[i]n 2002, what were developed data transmission overlay technologies for a power line?”); Ex. 2002 ¶ 6 (Blackburn Suppl. Decl.) (“Prior to the [’524 patent’s] filing date . . ., a [person having ordinary skill in the art] would have known and understood that two communications protocols were being used for PLC (Power Line Communications) - X-10 and HomePlug.”).

We also find unavailing Patent Owner’s argument that “when asked to provide ***any example*** of ***any*** application of X.10 or Homeplug on an exterior power line, Dr. Akl could ***only point to the ’524 Patent***.” PO Resp. 1; Obs. 2 (citing Ex. 2003 62:25–63:20) (making a similar argument). Petitioner responded that “Petitioner’s Expert (Dr. Robert Akl) [t]estified [t]hat Suh [t]eaches [t]ransmitting IP [d]ata [o]ver an [e]xternal [p]ower [l]ine.” Obs. Resp. 1–3 (citing Ex. 2003, 50:6–51:20). We agree with Petitioner that Dr. Akl testified that Suh discloses a meter transmitting IP data “over a power line medium” using “a modem that would allow for power line communication.” Ex. 2003, 50:6–51:20. Regardless, the relevant inquiry is what Suh’s combined teachings would have taught to one of ordinary skill in the art.

We also disagree with Patent Owner's argument contrasting the disclosures of Suh and the '524 patent, with respect to Suh's enablement. Specifically, Patent Owner argues that in contrast to Suh, "the '524 [p]atent discloses the *conversion* of . . . HomePlug data into an IP format that may be transmitted over an external power line. . . . Specifically, the '524 [p]atent discloses 'using the Internet Protocol over the HomePlug protocol' to transmit information on power line 50." PO Resp. 11–12 (citing Ex. 1001, 3:67–4:4). Notably, the '524 patent discloses using IP over HomePlug to transmit information on a power line by pointing to a chip that already was commercially available (VS6801, manufactured by Valence Semiconductor, Inc.). Ex. 1001, 3:65–4:4 ("VS6801 CMOS chip manufactured by Valence Semiconductor, Inc. . . . combines analog to-digital (A/D) converters, digital-to-analog (D/A) converters, signal conditioning circuitry, and power line interface circuitry to allow transmission of data across power line 50 using Internet Protocol over the HomePlug protocol.").

Having considered the parties' arguments and the evidence before us, we agree with Petitioner and find by a preponderance of the evidence that Suh is an enabling prior art reference for the reasons stated above.

6. Summary

Accordingly, based on a review of the entire record, we find that Petitioner has demonstrated by a preponderance of the evidence that Suh teaches each of the limitations recited in claim 17, and that one of ordinary skill in the art would have found it obvious to combine these teachings so as to render claim 17 obvious.

C. Dependent Claims 18–22

Each of claims 18–22 depends, directly or indirectly, from independent claim 17. Petitioner contends that Suh would have conveyed the additional limitations recited in these dependent claims to one of ordinary skill in the art. Pet. 32–47. Petitioner provides detailed analysis supported by the declaration testimony of Dr. Akl and specific citations to Suh indicating where the limitations of claims 18–22 are taught. *Id.*

Although the burden remains on the Petitioner to demonstrate by a preponderance of the evidence that the claims are unpatentable (35 U.S.C. § 326(e); 37 C.F.R. § 42.1(d); *Dynamic Drinkware*, 800 F.3d at 1378), we note that Patent Owner does not separately argue the dependent claims (*see generally* Patent Owner Response).

1. Claim 18

Claim 18, which depends from independent claim 17, recites the additional steps of "receiving the IP-based power consumption information at the destination; and calculating a utility bill using the IP-based power consumption information." Ex. 1001, 10:60–64. We agree with Petitioner and find that Suh teaches these additional steps. *See* Pet. 32–34 (citing Ex. 1006 ¶¶ 9, 11; Ex. 1003 ¶ 161). Suh teaches that IP-based power consumption information is received at a remote site, which "is typically the service and accounting center of the company providing or brokering the electrical power . . . [and which] can . . . generate . . . user billings for power usage." Ex. 1006 ¶ 11; *see also* Section IV(B)(5)(i) (finding Suh teaches transmitting IP-based power consumption information). Suh also teaches that "the remote site is the information service provider in control of the electronic power meters, where customer and client billings relating to meter

data are prepared." Ex. 1006 ¶ 9. In addition, Dr. Akl testified that a person having ordinary skill in the art "would have understood that the remote site would generate a bill based on a rate structure and a number of kilowatt hours used." Ex. 1003 ¶ 161. We credit Dr. Akl's testimony as it comports with Suh's teachings, including Suh's teaching of receiving meter data and "generat[ing] . . . user billings for power usage." Ex. 1006 ¶ 11.

Based on the disclosures from Suh and Dr. Akl's testimony, we find that Suh teaches "receiving the IP-based power consumption information at the destination; and calculating a utility bill using the IP-based power consumption information."

2. Claim 19

Claim 19, which depends from independent claim 17, recites the additional step of "transmitting the IP-based power consumption information over an IP-based network." Ex. 1001, 10:65–67. We agree with Petitioner and find that Suh teaches this additional step. *See* Pet. 34–37 (citing Ex. 1006 ¶¶ 8, 35–36, Fig. 4; Ex. 1003 ¶ 164). Suh teaches that its "[I]nternet ready electronic power meter . . . incorporates a communication component that enables the electronic meter to communicate in a . . . wide area network (WAN) . . ., such as the [I]nternet." Ex. 1006 ¶ 8. Suh also teaches transmitting "data records including the kWh usage rate" (i.e., power consumption information) as an *IP datagram* (encapsulating an e-mail) over a telephone line to a host ISP. *Id.* ¶¶ 35–36, Fig. 4. In addition, Dr. Akl testified that a person having ordinary skill in the art "would have understood that th[e] transmission of kilowatt hour usage data to an email address over the Internet using standard network protocols (e.g., TCP/IP) constitutes a transmission of IP-based power consumption data over an IP-

based network." Ex. 1003 ¶ 164. We credit Dr. Akl's testimony as it comports with Suh's teachings. *See, e.g.*, Ex. 1006 ¶¶ 8 (teaching that Suh's Internet ready power meter can communicate over the Internet), 35–36 (teaching sending kWh usage rate data using TCP/IP headers), Fig. 4 (showing communication of IP datagrams containing kWh data to a remote site).

Based on the disclosures from Suh and Dr. Akl's testimony, we find that Suh teaches "transmitting the IP-based power consumption information over an IP-based network." Our reasoning and findings above with respect to Section IV(B)(5)(i) also are applicable here.

3. Claim 20

Claim 20, which depends from independent claim 17, recites the additional step of "wirelessly transmitting the IP-based power consumption information from the processor to the destination." Ex. 1001, 11:1–3. We agree with Petitioner and find that Suh teaches this additional step. *See* Pet. 37–39. We agree with Dr. Akl that this additional step can occur, *inter alia*, "by sending the same information to the same destination over separate networks." Ex. 1003 ¶ 166. Suh teaches that its "electronic power meter includes the communication components necessary to communicate by . . . wireless communication systems to periodically transfer collected data to a remote site." Ex. 1006 ¶ 8. Suh also teaches that these communication components can "include a radio frequency transceiver for wireless communication of collected data to a wireless service provider for routing to the data collection center." *Id.* ¶ 13. Suh also teaches that "microprocessor 36 is operably connected to [] modem 64 which is . . . connected via ports 66 to the microprocessor input 67 and output 68. The modem 64 is . . .

connected to the international computer network 70 . . . using a transceiver 74 via airway transmissions through an antenna 76," and can "connect directly to any ISP of any web site." *Id.* ¶ 30; *see also* Pet. 38–39 (citing Ex. 1006 ¶¶ 8, 13, 30; Ex. 1003 ¶¶ 166, 168).

In addition, Dr. Akl testified that a person having ordinary skill in the art "would have understood that redundant communications technologies allow enhanced communication reliability." Ex. 1003 ¶ 168. We credit Dr. Akl's testimony as it comports with Suh teachings (e.g., ¶¶ 8, 30 (teaching multiple communication pathways)) and is well reasoned. This testimony supports that one of ordinary skill in the art would have also wirelessly transmitted IP-based power consumption information to the remote site. Ex. 1003 ¶ 168.

Based on the disclosures from Suh and Dr. Akl's testimony, we find that Suh teaches "wirelessly transmitting the IP-based power consumption information from the processor to the destination."

4. Claim 21

Claim 21, which depends from independent claim 17, recites the additional steps of "generating a control signal in the processor in response to the power consumption information; transmitting the control signal to an appliance; and controlling the appliance with the control signal." Ex. 1001, 11:4–8. We agree with Petitioner and find that Suh teaches the additional steps recited in claim 21. *See* Pet. 40–44 (citing Ex. 1006 ¶¶ 3, 50, claims 3 and 10; Ex. 1003 ¶ 172). Suh teaches:

> Other input and output signals [of microprocessor 36] are transmitted through port 66 to operate and monitor other electronic system controllers such as a site security controller 172 or appliance controller 174. This permits control of or response to site security situations or control and operation of

> site appliances like air conditioners, heaters, lights and other appliance systems that are clients of the power meter 10.

Ex. 1006 ¶ 50. Suh also teaches that the "ability to track power usage in real time . . . enables site automation . . . and appliance control[]." *Id.* ¶ 3. Furthermore, Suh's claim 10 recites that "the utility meter has means for remotely controlling appliances at the site of the electronic utility meter in response to costs for the utility being provided." *Id.*, claim 10; *see also id.* at claim 3 ("The utility management system of claim 2 wherein the energy meter connects to controllers of systems at the site provided with the energy meter with the management system further comprises controlling the systems at the site via the computer network communication system.").

In addition, Dr. Akl testified that Suh's paragraphs 3 and 50, as well as Suh's claim 3:

> [I]ndicate that Suh teaches that port 66 in the energy meter in Fig. 2, which is connected to microprocessor 36 via transmit and receive lines and is used to communicate information to and from that microprocessor, is used to transmit input and output signals to control . . . appliance controller 174, as shown in Figs. 2 and 7. . . . A [person having ordinary skill in the art] would therefore understand that the "output signals" described above for controlling the . . . appliance controller would be generated by microprocessor 36 and sent through port 66.

Ex. 1003 ¶ 172. We credit Dr. Akl's testimony as it comports with Suh's teachings.

Based on the disclosures from Suh, and Dr. Akl's testimony, we find that Suh teaches generating a control signal in the processor (i.e., Suh's microprocessor 36 generates outputs transmitted through port 66) in response to the power consumption information (i.e., Suh's teaching of tracking power usage *in real time* to enable appliance control); transmitting

the control signal to an appliance (i.e., Suh's teaching of the output signal operating appliance controller 174); and controlling the appliance with the control signal (i.e., Suh's teaching of controlling operation of site appliances like air conditioners, heaters, and lights). In other words, we find that Suh teaches "generating a control signal in the processor in response to the power consumption information; transmitting the control signal to an appliance; and controlling the appliance with the control signal."

5. Claim 22

Claim 22 depends from claim 21 and recites "wherein the step of controlling the appliance comprises turning the appliance off in response to increased power consumption." Ex. 1001, 11:9–11. We agree with Petitioner and find that Suh teaches the additional limitation recited in claim 22. *See* Pet. 45–47 (citing Ex. 1006 ¶¶ 3, 50, Fig. 2; Ex. 1003 ¶ 178). Suh teaches that the "ability to track power usage in real time . . . enables site automation . . . and appliance control[]." Ex. 1006 ¶ 3. Suh also teaches that receiving the power consumption information "permits . . . control and operation of site appliances like air conditioners, heaters, lights and other appliance systems that are clients of the power meter 10." *Id.* ¶ 50. In addition, based on these passages in Suh, Dr. Akl testified that "[b]ecause the primary (if not only) available controls for lighting are to turn the lights on or off, . . . it would have been obvious . . . to turn off lighting and other appliances connected to the utility meter in response to monitoring power usage information." Ex. 1003 ¶ 178. Dr. Akl supports his conclusion with further explanation:

> For example, detecting increased power consumption of lighting late at night would enable the system to turn off the lighting using the utility meter and appliance controller of Suh.

> [One of ordinary skill in the art] would also have known that the utility company would want to reduce power consumption during periods of peak or increased power consumption, and that this could be accomplished by disabling appliances known to use a high amount of power using the appliance controllers described by Suh.

Id. We credit Dr. Akl's testimony, which is well-reasoned and comports with Suh's specific descriptions on which Dr. Akl relies.

Based on the disclosures from Suh and Dr. Akl's testimony, we find that Suh teaches "wherein the step of controlling the appliance comprises turning the appliance off in response to increased power consumption."

6. Summary

Accordingly, based on a review of the entire record, we find that Petitioner has demonstrated by a preponderance of the evidence that Suh teaches each of the limitations recited in claims 18–22.

V. CONCLUSION

Based on the full record before us, we determine that Petitioner has demonstrated by a preponderance of the evidence that claims 17–22 are unpatentable under 35 U.S.C. § 103(a) as directed to subject matter that would have been obvious over Suh to a person of ordinary skill in the art.

VI. ORDER

Accordingly, it is:

ORDERED that claims 17–22 of U.S. Patent No. 7,058,524 B2 have been shown to be unpatentable; and

FURTHER ORDERED that, because this is a final written decision, parties to the proceedings seeking judicial review of the decision must comply with the notice and service requirements of 37 C.F.R. § 90.2.

PETITIONER:

Kirk T. Bradley
Christopher Douglas
ALSTON & BIRD LLP
kirk.bradley@alston.com
christopher.douglas@alston.com

PATENT OWNER:

Decker A. Cammack
Enrique Sanchez, Jr.
WHITAKER CHALK SWINDLE & SCHWARTZ PLLC
dcammack@whitakerchalk.com
rsanchez@whitakerchalk.com