Trials@uspto.gov
571-272-7822

Paper 128
Date: October 21, 2019

UNITED STATES PATENT AND TRADEMARK OFFICE

BEFORE THE PATENT TRIAL AND APPEAL BOARD

INTEX RECREATION CORPORATION and BESTWAY (USA) INC.,
Petitioner,

v.

TEAM WORLDWIDE CORPORATION,
Patent Owner.

IPR2018-00859
Patent 9,211,018 B2

Before BEVERLY M. BUNTING, JAMES J. MAYBERRY, and ERIC C. JESCHKE, *Administrative Patent Judges.*

MAYBERRY, *Administrative Patent Judge*.

JUDGMENT
Final Written Decision
Determining No Challenged Claims Unpatentable
35 U.S.C. § 318(a)

ORDER
Denying Petitioner's Motion to Exclude
Denying Patent Owner's Motion to Exclude
37 C.F.R. § 42.64

I. INTRODUCTION

A. Background and Summary

Intex Recreation Corp., Bestway (USA) Inc., Walmart Inc., Wal-Mart Stores Texas, LLC, Wal-Mart.com USA LLC, and Sam's West, Inc. d/b/a Sam's Club (collectively, "Petitioner"), filed a Petition ("Pet.") requesting *inter partes* review of claims 1, 5, 7, and 11–14 (the "Challenged Claims") of U.S. Patent No. 9,211,018 B2 (Ex. 1001, the "'018 patent"). Paper 4. Patent Owner, Team Worldwide Corp., filed a Preliminary Response ("Prelim. Resp.") to the Petition. Paper 9. We instituted trial on all claims and grounds. Paper 15 ("Dec. on Inst.").

After we instituted trial, Patent Owner filed a Patent Owner Response. Paper 46 ("PO Resp.").[1] Petitioner filed a Reply to the Patent Owner Response. Paper 72 ("Reply").[2] Patent Owner filed a Sur-reply to the Reply. Paper 81 ("Sur-reply").[3]

Both Petitioner and Patent Owner filed motions to exclude evidence. Papers 96, 97. Both parties filed oppositions and replies to the respective motions. Papers 99, 100, 103, 104.

On June 18, 2019, we granted a joint motion to terminate the proceeding as to the Walmart entities (Walmart Inc., Wal-Mart Stores Texas, LLC, Wal-Mart.com USA LLC, and Sam's West, Inc. d/b/a Sam's Club). Paper 94. Accordingly, Intex Recreation Corp. and Bestway (USA) Inc. are the sole remaining Petitioner entities.

---

[1] A public version of the Patent Owner Response was filed as Paper 48.
[2] A public version of the Reply was filed as Paper 73.
[3] A public version of the Sur-reply was filed as Paper 82.

A consolidated oral hearing was conducted on July 29, 2019, for this proceeding and proceedings IPR2018-00873 and IPR2018-00874, and the record includes a transcript of the hearing. Paper 117 ("Tr.").[4]

Petitioner relies on the declaration testimony of Dr. Joseph Beaman (Exs. 1002, 1625), Mr. W. Todd Schoettelkotte (Ex. 1649), and Mr. Ryan Slate (Ex. 1650). Patent Owner relies on the declaration testimony of Dr. Glen Stevick (Ex. 2029) and Dr. Stephen Becker (Ex. 2638).

The Board has jurisdiction under 35 U.S.C. § 6. This Final Written Decision is issued pursuant to 35 U.S.C. § 318(a) and 37 C.F.R. § 42.73. For the reasons that follow, we conclude that Petitioner fails to demonstrate, by a preponderance of the evidence, that the Challenged Claims are unpatentable.

B. Real Parties in Interest

The Petition indicates that, along with Petitioner, the following entities are real parties-in-interest: Intex Development Company Ltd., Intex Industries (Xiamen) Co., Ltd., Intex Marketing Ltd., Intex Trading Ltd., Bestway Global Holdings, Inc., Bestway (Hong Kong) International, Ltd., Bestway Inflatables & Materials Corp., Bestway (Hong Kong) Enterprise Co. Ltd., Bestway (Nantong) Recreation Corp., The Coleman Company, Inc., and Newell Brands Inc. Pet. 1.

C. Related Matters

The parties indicate that the '018 patent was the subject of an infringement suit in the U.S. District Court for the Eastern District of Texas, in a case styled *Team Worldwide Corp. v. Walmart, Inc., et al.*, No. 2-17-cv-

[4] A public version of the transcript was filed as Paper 116.

00235-JRG (the "Litigation"). *See* Pet. 1–2; Paper 6, 1. The Litigation was dismissed because of settlement. *See* Paper 44, 1–2.

Petitioner also identifies the filed petitions for *inter partes* review of U.S. Patent Nos. 7,346,950 (the "'950 patent") and 7,246,394 (the "'394 patent"). *See* Pet. 2; Paper 6, 1 (identifying IPR2018-00870, IPR2018-00871, IPR2018-00872, IPR2018-00873, and IPR2018-00874 as challenging the '394 patent, and IPR2018-00875 as challenging the '950 patent).

Patent Owner indicates that additional lawsuits involving the '950, '018, and '394 patents have been filed: *Team Worldwide Corp. v. Macy's, Inc. & Macys.com, LLC*, No. 2:19-cv-00099-JRG (E.D. Tex.); *Team Worldwide Corp. v. Target Corporation & Target Brands, Inc.*, No. 2:19-cv-00100-JRG (E.D. Tex.); *Team Worldwide Corp. v. The Home Depot, Inc.*, No. 2:19-cv00098-JRG (E.D. Tex.); *Team Worldwide Corp. v. Dick's Sporting Goods, Inc.*, No. 2:19-cv-00097-JRG (E.D. Tex.); *Team Worldwide Corp. v. Costco Wholesale Corp.*, No. 2:19-cv-00096-JRG (E.D. Tex.); *Team Worldwide Corp. v. Bed Bath & Beyond Inc.*, No. 2:19-cv-00095-JRG (E.D. Tex.); *Team Worldwide Corp. v. Amazon.com, Inc. and Amazon.com LLC*, No. 2:19-cv-00094-JRG (E.D. Tex.); *Team Worldwide Corp. v. Ace Hardware Corp.*, No. 2:19-cv-00093-JRG (E.D. Tex.); and *Team Worldwide Corp. v. Academy, Ltd. d/b/a Academy Sports + Outdoors*, No. 2:19-cv-00092-JRG (E.D. Tex.). Paper 88, 2–3. Patent Owner indicates that these lawsuits have been stayed pending the results of this and related *inter partes* review proceedings. *Id.* at 3.

Patent Owner also identifies "a claim filed in *In re Sears Holding Corp., et al.* chapter 11 bankruptcy cases pending before the United States Bankruptcy Court for the Southern District of New York, Case No. 18-

23538 (RDD) (Jointly Administered) in which Patent Owner asserts infringement of" the '950, '018, and '394 patents. Paper 88, 3.

D. The '018 Patent

The '018 patent, titled "Inflatable Airbed Provided with Electric Pump Having Pump Body Recessed into the Inflatable Airbed," issued December 15, 2015, from an application filed January 10, 2005. Ex. 1001, codes (54), (45), (22). The '018 patent "relates in general to an inflatable product provided with an electric air pump." *Id.* at 1:20–21. Figure 14 is reproduced below:

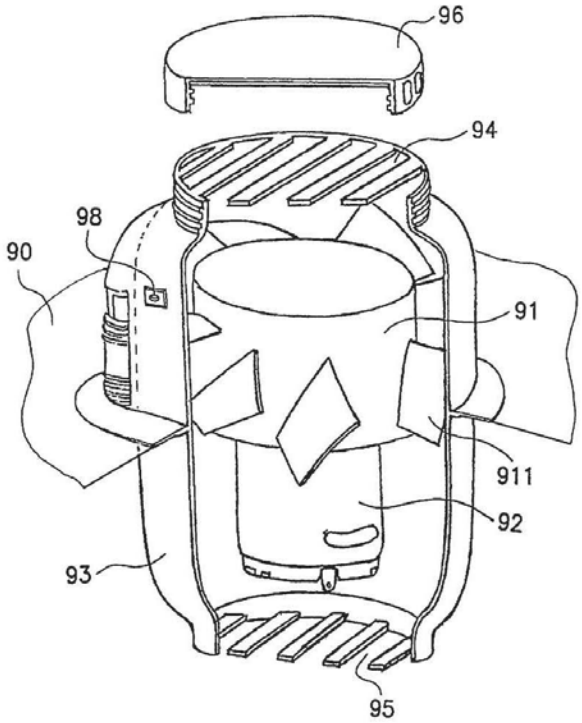

FIG. 14

Figure 14 depicts "a perspective diagram of an electric pump of an airbed." *Id.* at 2:53–54. The electric pump of the embodiment of Figure 14 includes housing 93 containing motor 92 and fan 91. *Id.* at 6:55–57. Housing 93 is mounted on airbed 90, which is only partially shown in Figure 14. *Id.* at 6:61–62. That is, the housing of the air pump is connected directly to, or

built into, airbed 90. *See* Pet. 6 ("[T]he key aspect of the claimed invention in the '018 [p]atent is 'provid[ing] a convenient airbed with built in electric components where the pump body is built into the exterior wall of the airbed.'").

First hole 94 communicates with the atmosphere outside of airbed 90 and second hole 95 communicates with the inside of airbed 90. Ex. 1001, 6:62–64. To inflate airbed 90, fan 91 and motor 92 pump outside air into the pump through first hole 94 and then into airbed 90 through second hole 95. *Id.* at 6:64–65. Once filled, cover 96 is screwed to housing 93 to prevent air from leaking out of airbed 90. *Id.* at 6:66–67. To deflate the airbed, cover 96 is removed and fan 91 and motor 92 are operated in reverse to pump air out of the airbed. *Id.* at 6:67–7:2.

E. Illustrative Claims

Of the Challenged Claims, claims 1 and 14 are independent claims. Ex. 1001, 7:28–8:37. Claim 1 is reproduced below.

> 1. An inflatable product comprising:
>
> an inflatable body comprising an exterior wall; and
>
> an electric pump for pumping the inflatable body, the electric pump comprising a pump body and an air outlet,
>
> wherein the pump body is built into the exterior wall and wholly or partially recessed into the inflatable body, leaving at least a portion of the pump body exposed by the exterior wall, and
>
> wherein the pump body is permanently held by the inflatable body.

Ex. 1001, 7:28–36. Claim 14 is broader than claim 1, as claim 14 does not require the pump body to be permanently held by the inflatable body. *See id.* at 8:30–37.

F. Prior Art and Asserted Grounds

The table below summarizes the grounds on which we instituted trial. Dec. on Inst. 6, 44.

Claim(s) Challenged	35 U.S.C. §	Basis
1, 7, 11–14	102(e)	Chaffee[5]
5	103	Chaffee and Walker[6]
1, 7, 12–14	102(b)	Chan[7]
5, 11	103	Chan and Walker
1, 7, 11–14	103	Parienti[8] and Goldsmith[9]
5	103	Parienti, Goldsmith, and Walker
1, 7, 11–14	103	Chaffee

G. Overview of the Prior Art

The Petition relies on five prior art references in its asserted grounds of unpatentability—Parienti, Chaffee, Goldsmith, Chan, and Walker. We discuss each in turn, below.

1. Parienti

Parienti, titled "Automatically Inflatable, Deflatable and Foldable Solar-Powered Cooler Mattress with a Sunshade," issued February 1, 2000. Ex. 1005, codes (54), (45). Parienti discloses that the "invention is made up of an inflatable mattress and an associated device for automatic inflating and deflating of the mattress" and that "[t]h[e associated] device is made interdependent with the mattress by means of gluing or any other means." *Id.* at 1:22–25. Figure 1 of Parienti is reproduced below:

[5] Chaffee, US 7,039,972 B2, issued May 9, 2006 (Ex. 1006).
[6] Walker, US 4,890,344, issued Jan. 2, 1990 (Ex. 1009).
[7] Chan, US 5,564,963, issued Oct. 15, 1996 (Ex. 1008).
[8] Parienti, US 6,018,960, issued Feb. 1, 2000 (Ex. 1005).
[9] Goldsmith, US 2,493,067, issued Jan. 3, 1950 (Ex. 1007).

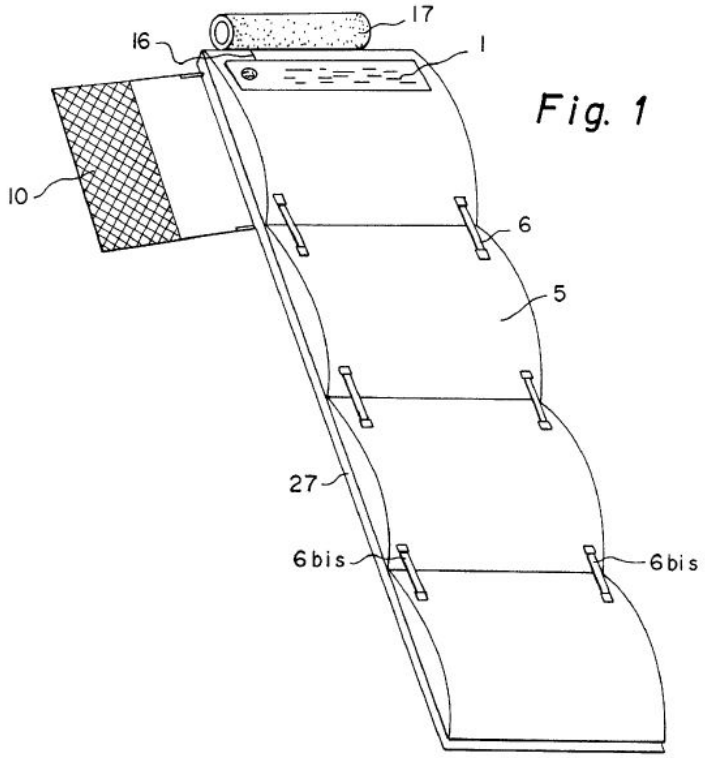

Figure 1 depicts "a plan view of the solar powered mattress of the . . . invention." *Id.* at 1:36–37. The embodiment in Figure 1 shows, among other aspects, mattress 5, photovoltaic cells 1, and pipe 16, which may direct airflow to porous cylinder 17 for cooling a user. *See, e.g.*, *id.* at 3:20–29.

Figures 4 and 5 are reproduced below:

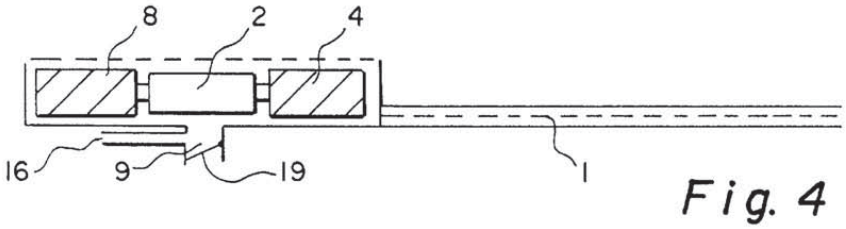

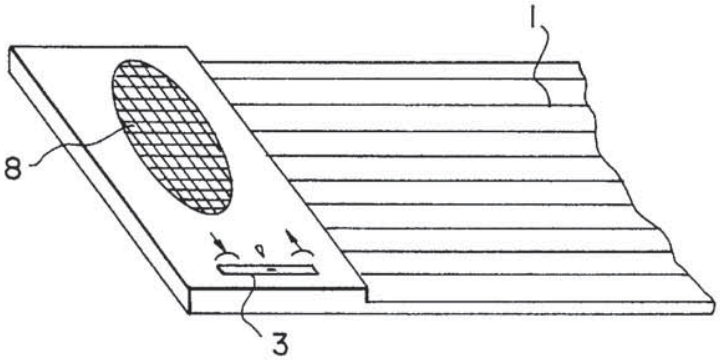

Fig. 5

Figure 5 depicts "a plan view of a device for inflation/deflation of the solar powered mattress," and Figure 4 depicts a cross-sectional view of the device of Figure 5. Ex. 1005, 1:44–46. Parienti discloses:

> Switching from inflating to deflating function is performed by reversing the polarity of the motor (2) that drives the turbine (4). Inflating is performed through the rotation of the turbine in one direction, what causes the suction of ambient air through the protective grid (8) and the introduction of the air into the mattress through the pipe (9). Likewise, deflating is performed through the rotation of the turbine in the reverse direction, what causes the suction of the air from the mattress and its exhausting to the exterior (FIG. 4).

Id. at 2:64–3:6.[10] As seen in Parienti's Figure 4, above, pipe 9 is positioned with respect to mattress 5 for inflating and deflating the mattress.

2. Chaffee

Chaffee, titled "Inflatable Device with Recessed Fluid Controller and Modified Adjustment Device," issued May 9, 2006. Ex. 1006, codes (54), (45). The application that matured into Chaffee was filed May 17, 2001, and

[10] The lead line for protective grid 8 in Parienti's Figure 4 mistakenly extends to a portion of turbine 4 rather than to protective grid 8, represented as the horizontal dashed line *above* turbine 4 and motor 2. *Compare* Ex. 1005, Fig. 4, *with id.*, Fig. 5.

claims priority to provisional applications filed March 30, 2001, and May 17, 2000. *Id.* at codes (22), (60). Chaffee relates to "inflatable devices, and, more specifically, to an inflatable device with a recessed fluid controller." *Id.* at 1:13–15. Figure 2 of Chaffee is reproduced below:

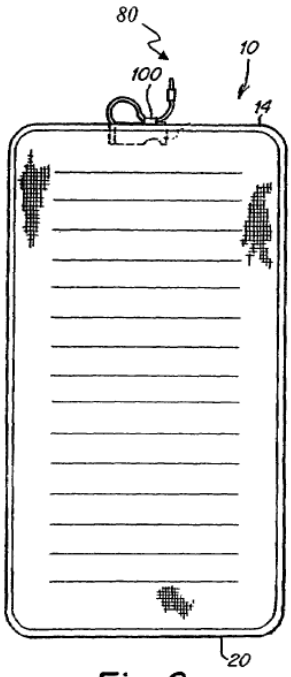

Fig. 2

Figure 2 depicts inflatable device 10, which includes, among other aspects, "substantially fluid impermeable bladder 20 and a fluid controller 80 comprising an electrically powered pump at least partially positioned within bladder 20." *Id.* at 3:3–7. Chaffee discloses that fluid controller 80 "control[s] the flow of fluid into and/or out of bladder 20." *Id.* at 3:59–61.

Figures 3 and 5 are reproduced below:

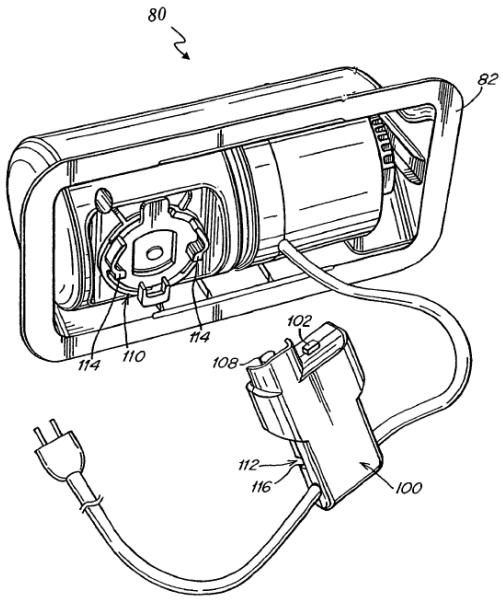

Fig. 3

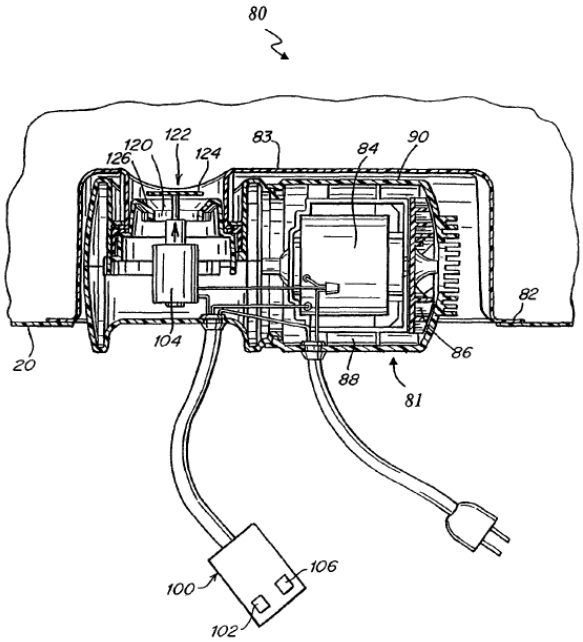

Fig. 5

Figures 3 and 5 depict a perspective view and cross-sectional view, respectively, of one embodiment of fluid controller 80. *See* Ex. 1006, 2:34–35, 38–39. These figures depict, among other aspects, pump 81, flange 82, wall 83, and housing 90. *See id.* at 4:11–17, 5:4–13.

3. Goldsmith

Goldsmith, titled "Mattress," issued January 3, 1950. Ex. 1007, 1. Goldsmith "relates to improvements in mattresses and has particular reference to the type known as 'inner spring mattresses.'" *Id.* at 1:1–3. Goldsmith discloses providing an inner spring mattress with means "for blowing air of varying temperatures into the inner compartment of the mattress, and permitting such air to circulate through the said inner compartment, and to heat or cool the mattress to a temperature above or below the normal outside or surrounding temperature." *Id.* at 1:4–12. Figure 1 of Goldsmith is reproduced below:

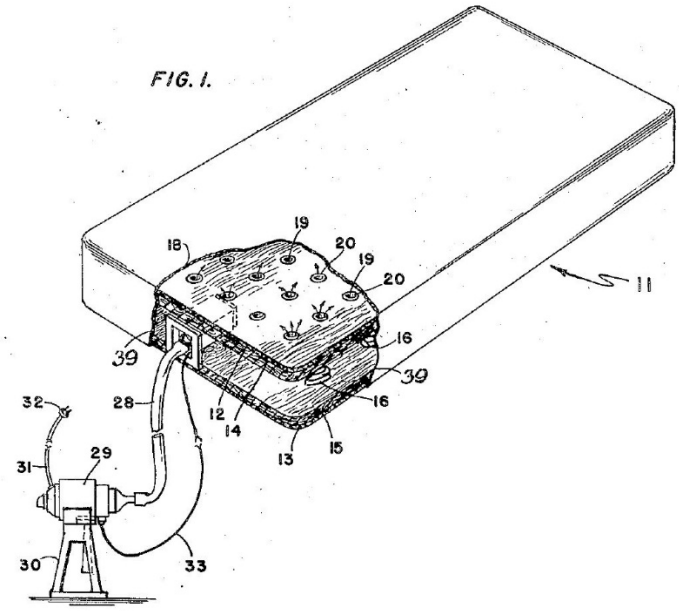

Figure 1 depicts "a perspective view, partly broken away, of a mattress and shows an air blowing mechanism attached thereto." Ex. 1007, 2:19–21. As shown in Figure 1, Goldsmith discloses one embodiment in which blower unit 29 provides air to one end of inner spring mattress 11 via tube 28. *See id.* at 2:51–3:1. Goldsmith discloses that wall 39 "encircles the mattress and acts to prevent the air within the aforesaid air compartment 17 from escaping." *Id.* at 3:25–28.

Figure 6 of Goldsmith is reproduced below:

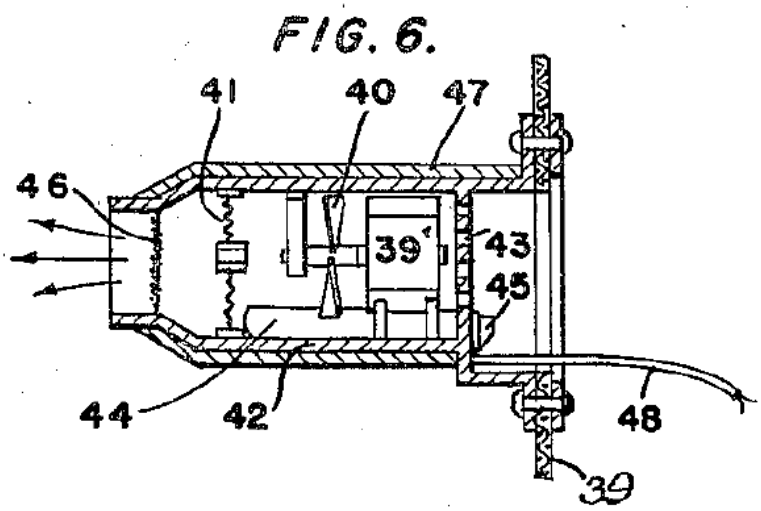

Figure 6 depicts a "sectional view showing a modified form of air distributing chamber which forms a part of th[e] invention." Ex. 1007, 2:30–32. The alternative embodiment shown in Figure 6 includes, among other aspects, motor 39' and fan 40 inside distribution casing 42, which is "mounted or attached to the mattress" previously described. *Id.* at 4:1–5. Goldsmith states: "With this form set [shown in Figure 6] within the mattress, no outside [blower] unit is necessary." *Id.* at 4:11–12.

4. Chan

Chan, titled "Air-Cushioned Toy," issued October 15, 1996. Ex. 1008, codes (54), (45). Chan is generally directed to a toy "supported by a self-generated air cushion." *Id.* at 1:5–6. Chan's Figure 2 is reproduced below.

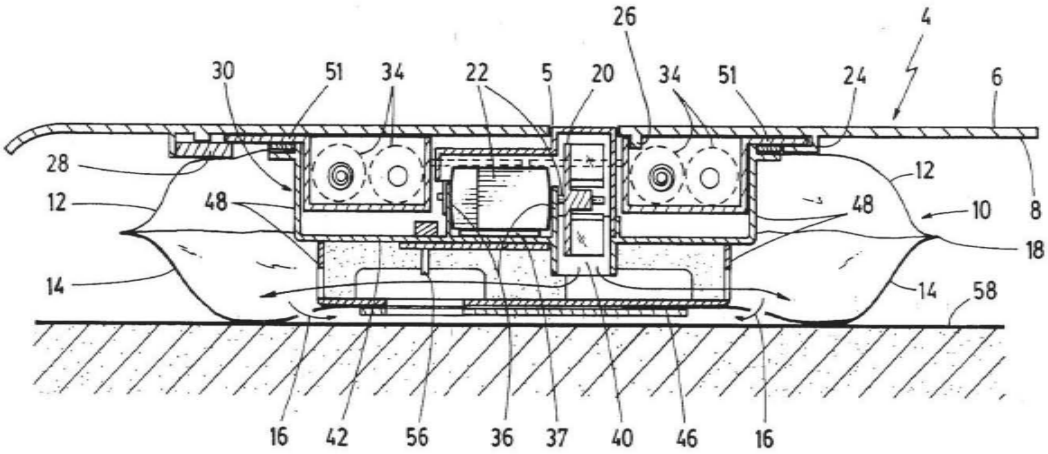

FIG. 2

Figure 2 depicts "a longitudinal sectional view of the air-cushion toy" of Figure 1 of Chan. *Id.* at 2:48–49. Motor 22 and fan 20 are enclosed in housing 30, which includes roof 50, floor 46, and side walls 48. *Id.* at 2:59–61; *see also id.* at Fig. 4 (depicting an exploded view of the inner mechanism of Chan's toy). Motor 22 drives fan 20, which draws air into pillow 10 through aperture 5. *Id.* at 3:5–6. Air is pushed through opening 40 in sub-

floor 42 and then outlets 44 and into pillow 10. *Id.* at 3:7–13, 4:15–18, 4:53–65; *see also id.* at Fig. 4 (showing outlets 44). Significant to our Decision, the air leaves pillow 10 through perforations 16 to form an air cushion between pillow 10 and surface 58. *See id.*; *see also id.* at Fig. 2 (showing air moving out of perforations 16).

Fan 20 and motor 22 are located within pillow 10. Ex. 1008, 3:54–58. When the fan operates, pillow 10 inflates and the air then passes through perforations 16 to form the air cushion. *Id.* at 4:57–62.

5. Walker

Walker, titled "Air Control System for Air Bed," issued January 2, 1990. Ex. 1009, codes (54), (45). Walker is generally directed to "air pumps and hand controls for supplying air under pressure to air mattresses and adjusting the pressure of the air in the air mattresses." *Id.* at 1:20–23. Walker's Figures 8 and 16 are reproduced below.

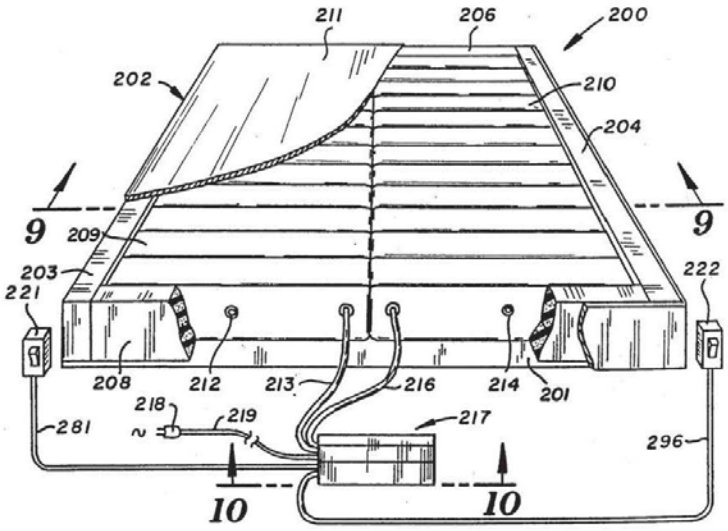

FIG.8

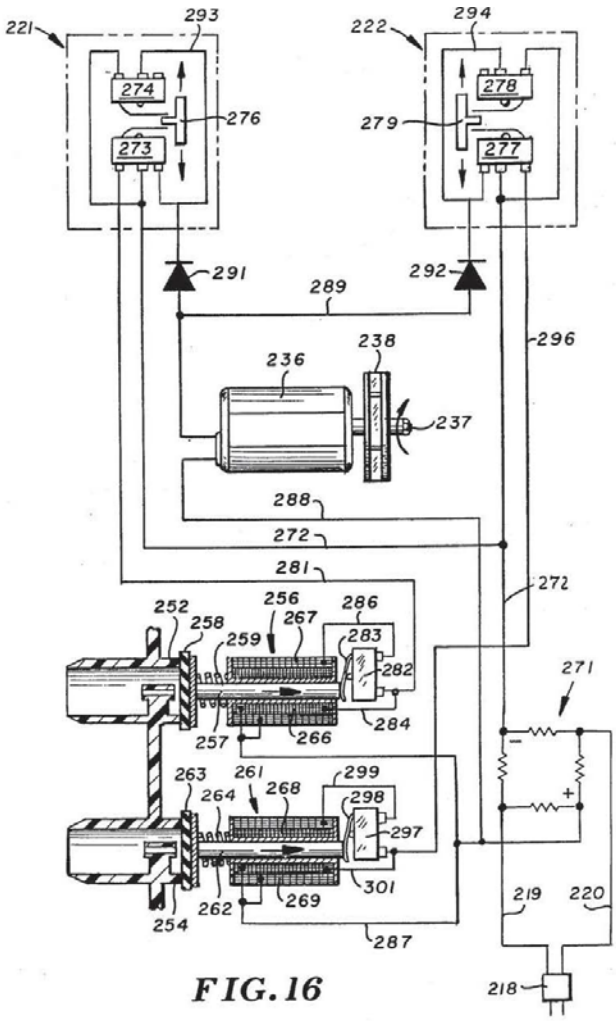

FIG. 16

Id. at Figs. 8, 16. Figure 8 depicts a "perspective view of an air bed . . . equipped with" an air control apparatus of Walker's invention and Figure 16 depicts a "diagrammatic view of the electrical control circuit of the air control apparatus of F[igure] 8." *Id.* at 3:60–62, 4:7–8. Significant to this proceeding, Walker discloses that "electrical receptacle plug 218 is joined to two electrical lines 219 and 220 leading to a resistance bridge rectifier 271. Rectifier 271 converts AC power to DC power." *Id.* at 9:59–62; *see also id.* at 10:21–11:13 (describing the operation of electric motor 236 and solenoids 256, 261).

II. ANALYSIS

A. Level of Ordinary Skill in the Art

The level of skill in the art is "a prism or lens" through which we view the prior art and the claimed invention. *Okajima v. Bourdeau*, 261 F.3d 1350, 1355 (Fed. Cir. 2001). Petitioner contends that a person having ordinary skill in the art would have had "a bachelor's degree in mechanical engineering, or an equivalent field" or, alternatively, "an associate's degree in mechanical engineering, or an equivalent field, and two years of practical experience in product design and manufacturing." Pet. 12 (citing Ex. 1002 (Decl. of Dr. Beaman) ¶¶ 27–29).

Patent Owner contends that a person having ordinary skill in the art would have had "a bachelor's degree in mechanical engineering or an equivalent field" or, alternatively, been "a designer with at least two years of experience in mechanical and electrical design aspects of inflatable products having electric air pumps." PO Resp. 22 (citing Ex. 2029 (Decl. of Dr. Stevick) ¶¶ 23–25). That is, Patent Owner contends that having a bachelor's degree in mechanical (or similar) engineering is equivalent to having specific experience in the mechanical and electrical aspects of inflatable products with electric pumps.

We find both parties assert very similar definitions of the level of ordinary skill in the art. Both definitions include, as one alternative, a degreed mechanical engineer or the like. We agree with Patent Owner that

an individual[11] without a bachelor's degree in mechanical engineering would be a person of ordinary skill in the art so long as they had experience with inflatable products with electric motors, and we adopt Patent Owner's formulation of the level of ordinary skill in the art. *See* PO Resp. 22.

We base our determination on a review of the prior art of record concerning inflatable products, small pumps for inflating or deflating products, and valves for small pumps. *See, e.g.*, Exs. 1011, 1013–1041, 1043–1055 (providing certain prior art); *see also* Ex. 1002 ¶¶ 50–75 (discussing the state of the art for inflatable products and pumps). As such, based on the complete record, we find that a person of ordinary skill in the art would have had "a bachelor's degree in mechanical engineering or an equivalent field" or, alternatively, "a designer with at least two years of experience in mechanical and electrical design aspects of inflatable products having electric air pumps."

Further, we note that our patentability and claim construction analyses presented below would reach the same findings and determinations under either party's definition of the level of ordinary skill in the art. *Cf.* Ex. 2029 ¶ 26 ("My opinions expressed in this declaration remain the same under either definition of a [person having ordinary skill in the art]."); Ex. 1625 ¶ 11 ("Despite my initial opinion, I agree with the Board's . . . definition of a [person having ordinary skill in the art].").

[11] Patent Owner uses the term "designer" in defining the level of skill in the art for an individual without a bachelor's degree in mechanical engineering. We do not discern any special meaning for that term based on Patent Owner's assertions, other than a person with the indicated experience. *See* PO Resp. 17–18; Ex. 2029 ¶¶ 30–36.

B. Claim Construction

In an *inter partes* review, claim terms in an unexpired patent are given their broadest reasonable construction in light of the specification of the patent in which they appear. 37 C.F.R. § 42.100(b) (2017). Under the broadest reasonable construction standard, claim terms are given their ordinary and customary meaning, as would be understood by one of ordinary skill in the art in the context of the entire disclosure. *In re Translogic Tech., Inc.*, 504 F.3d 1249, 1257 (Fed. Cir. 2007). Also, we are careful not to read a particular embodiment appearing in the written description into the claim if the claim language is broader than the embodiment. *See In re Van Geuns*, 988 F.2d 1181, 1184 (Fed. Cir. 1993) ("[L]imitations are not to be read into the claims from the specification.").

The claim construction standard to be employed in an *inter partes* review recently changed to the standard set forth in *Phillips v. AWH Corp.*, 415 F.3d 1303, 1316 (Fed. Cir. 2005). *See* Changes to the Claim Construction Standard for Interpreting Claims in Trial Proceedings Before the Patent Trial and Appeal Board, 83 Fed. Reg. 51,340 (Oct. 11, 2018) (now codified at 37 C.F.R. § 42). That new standard, however, applies only to proceedings in which the petition was filed on or after November 13, 2018. The Petition in this proceeding was filed on March 30, 2018 (Paper

8), and we apply the broadest reasonable interpretation claim construction standard that was in effect at that time.[12]

We note that, in two situations, the proper interpretation of a claim term departs from the ordinary and customary meaning, as would be understood by one of ordinary skill in the art in the context of the entire disclosure—when the patentee acts as its own lexicographer or disavows certain claim scope. *See Luminara Worldwide, LLC v. Liown Elecs. Co.*, 814 F.3d 1343, 1353 (Fed. Cir. 2016). "The standards for finding lexicography and disavowal are '*exacting*.'" *Id.* (emphasis added). "To act as a lexicographer, a patentee must 'clearly set forth a definition of the disputed claim term' and 'clearly express an intent to redefine the term.'" *Id.* Disavowal (or disclaimer) requires that the patentee make it clear, either in the specification or in the prosecution history, "that the invention does not include a particular feature." *Id.* "While such disavowal can occur either explicitly or implicitly, *it must be clear and unmistakable*." *Id.* (emphasis added).

Petitioner provides express constructions for two claim terms: "inflatable body" and "built into." Pet. 16–22. Patent Owner addresses these two terms and provides an express construction for an additional term: "pump body." PO Resp. 15–22. We address these constructions below.

---

[12] Patent Owner recognizes that the change in claim construction standard does not apply to this proceeding, but submits that *Phillips* has been recognized as "the correct standard." PO Resp. 15 n.3. Patent Owner does not explain why the standard in *Phillips* is "the correct standard," and, by implication, why the broadest reasonable interpretation is the incorrect standard. *See id.* In accordance with our rules, we apply the appropriate claim construction standard dictated for the current proceeding, the broadest reasonable interpretation.

1. "built into"

In our Decision on Institution, we preliminarily construed the term "built into" to mean "integrated into and not detachable from." Dec. on Inst. 22–23. Patent Owner acknowledges that our preliminary construction was as Patent Owner proposed. PO Resp. 19. Patent Owner continues that Petitioner mischaracterizes the meaning of this construction as presented in the Litigation. *Id.* at 19–21. Petitioner does not further address this construction in its Reply. *See* Reply; *see also* Ex. 1625 ¶ 13 ("I agree with [the Board's] preliminary constructions [for "built into" and "pump body"], and I understand that Dr. Stevick does as well."). Based on our review of the complete record, we do not see a reason to modify our construction.

Thus, based on the complete record, we adopt the reasons set forth in the Decision on Institution for purposes of this Final Written Decision in construing the term "built into" to mean "integrated into and not detachable from." *See* Dec. on Inst. 22–23.

2. "pump body"

In our Decision on Institution, we preliminarily adopted Patent Owner's proposed construction for the term "pump body" to mean "the main part of the electric pump and a separate and distinct element from the air outlet." Dec. on Inst. 23.

At trial, Patent Owner argues for the same construction. PO Resp. 21–22. Petitioner does not further address the construction of this term in its Reply. *See* Reply; *see also* Ex. 1625 ¶ 13 ("I agree with [the Board's] preliminary constructions [for "built into" and "pump body"], and I understand that Dr. Stevick does as well."). Based on our review of the complete record, we do not see a reason to modify our construction.

Thus, based on the complete record, we adopt the reasons set forth in the Decision on Institution for purposes of this Final Written Decision in construing "pump body" to mean "the main part of the electric pump and a separate and distinct element from the air outlet." *See* Dec. on Inst. 23.

3. "inflatable body"

In our Decision on Institution, we preliminarily construed the term "inflatable body" to mean "a *substantially airtight* structure that expands when filled with air or other gases," as proposed by Patent Owner. Dec. on Inst. 20–22. In reaching our preliminary construction, we found that, during prosecution of the application that matured into the '018 patent, Patent Owner stated that "the structure of an 'inflatable body' must be substantially airtight and expand when filled with air or other gas." Dec. on Inst. 21; *see* Ex. 1003, 597 (including the applicant's statement). We agreed with the District Court in its claim construction order in the Litigation that this statement clearly expresses Patent Owner's intent to redefine the term "inflatable body." *See* Ex. 1044, 12 (providing the District Court's reasoning); *Luminara Worldwide, LLC*, 814 F.3d at 1353 ("To act as a lexicographer, a patentee must 'clearly set forth a definition of the disputed claim term' and 'clearly express an intent to redefine the term.'"). We also recognized that our construction departs from the plain and ordinary meaning of the term, which is "a structure that expands when filled with air or other gases," the construction Petitioner proposes. Dec. on Inst. 21; *see* Pet. 16.

Petitioner disagrees with our preliminary construction. Reply 21–23 (arguing for its proposed construction). First, Petitioner contends that Patent Owner's construction conflates the term "inflatable product" with the term "inflatable body." Reply 21. Petitioner argues that Patent Owner relies on

the Specification's disclosure of airbeds, which Patent Owner argues are substantially airtight. *Id.* Petitioner stresses that the airbeds are inflatable products, not inflatable bodies, which are an element or component of the airbeds. *Id.* at 21–22. Patent Owner states that "Petitioners' overly broad construction would violate basic claim construction rules . . . since it would be at odds with the '018 [S]pecification in which every airbed embodiment is an inflatable body that retains air." PO Resp. 17. Although we agree with Petitioner that Patent Owner's specific argument conflates the term "inflatable product" (that is, the airbed) with the term "inflatable body" (a component of an airbed), this first argument of Petitioner does not address Patent Owner's statements during prosecution, which form the basis of our construction.

Second, Petitioner contends that "the prosecution history demonstrates that [Patent Owner]'s use of the phrase 'substantially airtight' during prosecution of the '018 [p]atent was about the capability of the material to expand when filled with air, not ***air leakage*** as [Patent Owner] now advocates." Reply 22. Petitioner argues that Patent Owner's statements during prosecution indicate that the "substantially airtight" requirement follows from a structure that expands when it fills with air. *Id.* (referencing Ex. 1003, 597; Ex. 1625 ¶ 26). Petitioner argues that Patent Owner further stated during prosecution that a structure that is not substantially airtight will not expand when filled with air. *Id.* (referencing Ex. 1003, 599). Petitioner continues that during prosecution, Patent Owner contended that the term "inflatable body" was being used in accordance with its plain and ordinary meaning. *Id.* (referencing Ex. 1003, 596, 597; *id.* at 3–15, 38).

To summarize, Petitioner argues that the use of the phrase "substantially airtight" in prosecution was used to describe a structure that

retains air sufficiently to expand when filled with air or other gases. Reply 23. Petitioner contends that, at a minimum, the statements made during prosecution are ambiguous and do not rise to a clear and unmistakable disavowal. *Id.*

Patent Owner asserts that the District Court's claim construction order in the Litigation "correctly acknowledged that Patent Owner did define 'inflatable body' as used in the '018 [p]atent *during prosecution*." PO Resp. 18.

We determine that the patentee's statements during prosecution of the application that matured into the '018 patent amounts to a disavowal of some of the full scope of the term "inflatable body." During prosecution, the patentee stated that "the term 'inflatable body' . . . is clearly used in its ordinary and customary sense, i.e., a body that is substantially airtight and expands when filed with air or other gas." Ex. 1003, 596; *see also id.* at 597 ("Stated differently, the structure of an 'inflatable body,' must be substantially airtight and expand when filled with air or other gas."). "A patentee's use of 'i.e.,' in the intrinsic record . . . is often definitional." *Rembrandt Wireless Techs., LP v. Samsung Elecs. Co.*, 853 F.3d 1370, 1376 (Fed. Cir. 2017). "Whether a statement to the PTO that includes 'i.e.' constitutes a clear and unmistakable disavowal of claim scope depends on the context." *Braintree Labs., Inc. v. Novel Labs., Inc.*, 749 F.3d 1349, 1355 (Fed. Cir. 2014). We find that the context of the patentee's statements here supports our determination that the statements represent a disavowal. *Cf.* Ex. 1044, 12 (providing the District Court's claim construction order and expressly stating that "[d]uring prosecution of the '018 [p]atent, the applicant explicitly explained the meaning of 'inflatable body' as the term is used in the patent").

Although we agree with Petitioner that the statements made during prosecution do suggest that Patent Owner believed the plain and ordinary meaning of the term included the "substantially airtight" requirement, this mistaken belief does not change the impact of the statements. Through the prosecution history record, the public was informed as to how Patent Owner intended the term "inflatable body" to be defined.

We do not agree with Petitioner that Patent Owner used the phrase "substantially airtight" to merely explain a characteristic of a structure that expands when filed with air or other gases. The use of the term "i.e.," along with other express statements (for example, "the structure of an 'inflatable body,' must be substantially airtight," Ex. 1003, 597) demonstrates Patent Owner's intention to define the term "inflatable body."

In summary, we construe the term "inflatable body" as recited in the claims of the '018 patent, to mean "a substantially airtight structure that expands when filled with air or other gases."

C. Asserted Grounds of Unpatentability based on Anticipation

In *inter partes* reviews, a petitioner bears the burden of proving unpatentability of the challenged claims, and the burden of persuasion never shifts to the patent owner. *Dynamic Drinkware, LLC v. Nat'l Graphics, Inc.*, 800 F.3d 1375, 1378 (Fed. Cir. 2015). To prevail in this proceeding, Petitioner must support its challenge by a preponderance of the evidence. 35 U.S.C. § 316(e); 37 C.F.R. § 42.1(d). Accordingly, all of our findings and conclusions are based on a preponderance of the evidence.

Petitioner asserts two grounds of unpatentability based on anticipation. Pet. 14–15. A "prior art reference—in order to anticipate under 35 U.S.C. § 102—must not only disclose all elements of the claim within the four corners of the document, but must also disclose those

elements 'arranged as in the claim.'" *Net MoneyIN, Inc. v. VeriSign, Inc.*, 545 F.3d 1359, 1369 (Fed. Cir. 2008) (quoting *Connell v. Sears, Roebuck & Co.*, 722 F.2d 1542, 1548 (Fed. Cir. 1983)). "Anticipation is an issue of fact." *In re Schreiber*, 128 F.3d 1473, 1477 (Fed. Cir. 1997).

1. Claims 1, 7, and 11–14 as allegedly anticipated by Chaffee

Petitioner asserts that claims 1, 7, and 11–14 are unpatentable under 35 U.S.C. § 102(e) as anticipated by Chaffee. Pet. 14. Patent Owner contends that "Chaffee is not prior art to the '018 [p]atent and need not be considered again." PO Resp. 49.

The '018 patent claims priority to at least U.S. patent application 09/738,331 ("'331 application"), filed December 18, 2000, and potentially to U.S. patent application 09/542,447 ("'447 application"), filed April 4, 2000.[13] Ex. 1001, 1:8–14. On the complete record in this proceeding, Patent Owner does not argue that the Challenged Claims of the '018 patent are entitled to an April 4, 2000 priority date, so, for purposes of this proceeding, we consider the priority date of the Challenged Claims to be December 18, 2000. *See* PO Resp. 52–58 (arguing that Chaffee is not entitled to a May 17, 2000 priority date but not addressing that May 17, 2000 is after an April 4, 2000 priority date).

Petitioner contends that Chaffee is prior art to the '018 patent because Chaffee is entitled to claim priority to U.S. provisional application 60/204,836 ("Chaffee '836 provisional," Ex. 1042), which was filed May 17, 2000—before the '018 patent's priority date of December 18, 2000. Pet. 23.

[13] The '331 application is a continuation-in-part of the '447 application, so the disclosure of the '331 application includes new matter compared to the disclosure of the '447 application. *See* Ex. 1001, 1:8–14.

Petitioner contends that the Chaffee ’836 provisional backs the claims that eventually issued in Chaffee, supporting the priority claim. *Id.* at 23–24.

In order for Chaffee to be entitled to the effective filing date of the Chaffee ’836 provisional, it must satisfy the requirements of 35 U.S.C. § 119(e)(1) (2006). *See Dynamic Drinkware*, 800 F.3d at 1378. In other words, the specification of the *provisional* must “contain a written description of the invention and of the manner and process of making and using it, in such full, clear, concise, and exact terms,” 35 U.S.C. § 112 ¶ 1, to enable an ordinarily skilled artisan to practice the invention *claimed* in at least one claim of the *non-provisional* application. *Id.*; *see also Comcast Cable Commc’ns, LLC v. Promptu Sys. Corp.*, Case IPR2018-00345, Paper 10 at 25 (PTAB July 2, 2018) (confirming that *Dynamic Drinkware* requires that only one claim in the non-provisional need be supported by the provisional). Additionally, Petitioner must demonstrate that the subject matter in Chaffee relied upon by Petitioner in its unpatentability contentions is sufficiently supported in the Chaffee ’836 provisional, this test being in addition to the comparison of claimed subject matter required by *Dynamic Drinkware*. *See In re Giacomini*, 612 F.3d 1380, 1383 (Fed. Cir. 2010) (“[A]n applicant is not entitled to a patent if another’s patent discloses the same invention, which was carried forward from an earlier U.S. provisional application or U.S. non-provisional application.”); *see also Comcast Cable Commc’ns, LLC*, Paper 10 at 25 (confirming that *Dynamic Drinkware* did not obviate the requirement in *In re Giacomini*).

As to the first test, Petitioner compares the disclosure in the Chaffee ’836 provisional to claims 1 and 4 (which depends from claim 1) of Chaffee. Pet. 24–28. Patent Owner argues that the Chaffee ’836 provisional fails to support Chaffee’s claim 1. PO Resp. 52–58. We agree.

Chaffee's claim 1 requires, in relevant part, "the fluid controller [to be] permanently coupled to the bladder." Pet. 28. Petitioner contends that the Chaffee '836 provisional discloses this subject matter, as it states that "the bladder and the housing [for the motor, impeller, and valve are] ***mechanically connected*** by means which define a fluid pathway between the two." Pet. 28. Patent Owner responds that "the meager disclosure of the [Chaffee] '836 [p]rovisional does not teach" this subject matter." PO. Resp. 58.

Petitioner fails to explain adequately how the Chaffee '836 provisional, disclosing that the bladder and housing are mechanically connected, means that the two components are *permanently coupled*. *See id.* A mechanical connection encompasses a range of both permanent and temporary couplings. *See* Ex. 2029 ¶ 114 (testifying that "a [person having ordinary skill in the art] would appreciate that things can be mechanically connected by a fluid pathway but yet not be permanently coupled"). For example, the housing could include a flange that is heat sealed to the bladder, forming a mechanical connection that is permanent. *See, e.g.*, Ex. 1006, 5:20–26 (discussing flange 82). As another example, the bladder may include an opening into which the housing could be threaded or otherwise temporarily connected. *See, e.g.*, Ex. 1001, Fig. 4 (depicting electric pump 30 temporarily connected to socket 34 and secured with the interaction of flanges 342 with flange 301); PO Resp. 58 ("In deposition, . . . Dr. Beaman was unable to determine how any parts connected or did not connect in Fig. 4 in the [Chaffee] '836 [p]rovisional (Ex. 1042), and he agreed that part of the drawing might be a strap to keep a removable unit in place." (referencing Ex. 2030, 268:11–12, 278:17–286:12)); Ex. 2029 ¶ 123 (testifying that Chaffee discloses an embodiment where the fluid controller

may be reversibly connected to the bladder). We do not discern, nor does Petitioner identify, any disclosure in the Chaffee ’836 provisional that indicates that the mechanical connection is permanent. Petitioner does not further address the Chaffee ground or Chaffee’s status as prior art in the Reply.

For at least the reason above, we determine that Petitioner fails to demonstrate that Chaffee is entitled to the May 17, 2000 filing date of the Chaffee ’836 provisional. Accordingly, we find, on the complete record, that Petitioner fails to demonstrate, by a preponderance of the evidence, that claims 1, 7, and 11–14 are unpatentable under 35 U.S.C. § 102(e) as anticipated by Chaffee.

2. Claims 1, 7, and 12–14 as allegedly anticipated by Chan

Petitioner asserts that claims 1, 7, and 12–14 are unpatentable under 35 U.S.C. § 102(b) as anticipated by Chan. Pet. 15. Patent Owner argues that Chan fails to disclose the recited “inflatable body,” a pump body built into an exterior wall of the inflatable body, or a pump body that is permanently held by the inflatable body. PO Resp. 68–69, 71–73.[14]

Claim 1 recites, in relevant part, “[a]n inflatable product comprising: an inflatable body comprising an exterior wall.” Ex. 1001, 7:28–29 (the “inflatable body” limitation). As we discussed above in our claim construction analysis, the term “inflatable body” is construed to mean “a substantially airtight structure that expands when filled with air or other gases.” Petitioner contends that Chan’s pillow 10 corresponds to the recited

[14] Patent Owner also argues that Chan is not analogous art to the ’018 patent. PO Resp. 69–71. “[T]he question whether a reference is analogous art is irrelevant to whether that reference anticipates.” *In re Schreiber*, 128 F.3d at 1478.

inflatable body. Pet. 52. We reproduce Petitioner's annotated version of Chan's Figure 2, below.

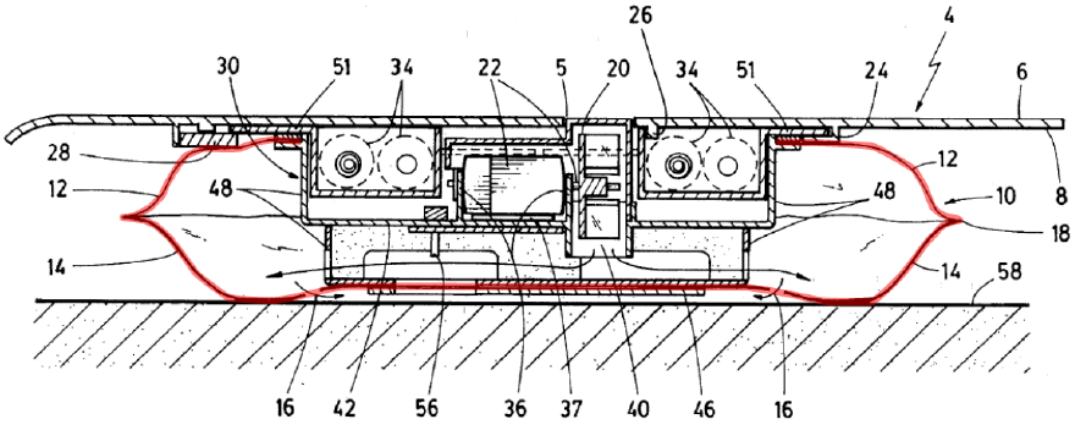

FIG. 2

Id. at 53. This annotated figure colorizes in red pillow 10, which is made up of sheets 12, 14. *See id.* Significant to our analysis here, pillow 10 includes perforations 16. As Chan describes, fan 20 powered by motor 22 creates an airflow that causes pillow 10 to expand, with air then leaving through perforations 16 to form a cushion of air below floor 46. *See* Ex. 1008, 4:53–65.

Patent Owner argues that Chan does not disclose an inflatable body, as pillow 10 is not substantially airtight. PO Resp. 69. Patent Owner explains that "Chan uses a fan and a pillow with perforations to create an air cushion below the user." *Id.* Petitioner replies that the proper construction of the term "inflatable body" does not require the structure to be substantially airtight. Reply 21–23. In reply, Patent Owner repeats its contention. Sur-reply 16–17.

As we discussed above, we construe the term "inflatable body" as used in the '018 patent claims to require the structure to be substantially airtight. Based on this construction, we find that Chan does not disclose an inflatable body. Critically, the purpose of Chan is to allow air to

continuously escape pillow 10 to form an air cushion on which toy 2 rides; that is, air passes through pillow 10, such that pillow 10 is not *substantially airtight*. *See* Ex. 1008, Abstract ("This invention relates to a toy supported by a self-generated air-cushion."); 3:7–13, 4:15–18, 4:53–65; *see also id.* at Figs. 2 (showing air moving out of perforations 16), 4 (showing outlets 44). Petitioner does not contend that Chan satisfies the inflatable body limitation under Patent Owner's construction, which we adopted. *See* Reply 21–23.

For at least this reason, we find, on the complete record, that Petitioner fails to demonstrate, by a preponderance of the evidence, that claim 1 is unpatentable under 35 U.S.C. § 102(b) as anticipated by Chan. Additionally, for this same reason, we find, on the complete record, that Petitioner fails to demonstrate, by a preponderance of the evidence, that claim 14 is unpatentable under 35 U.S.C. § 102(b) as anticipated by Chan, as claim 14 also includes the "inflatable body" limitation. *See* Ex. 1001, 8:30–31. Also, because claims 7, 12, and 13 depend, directly or indirectly, from claim 1, we find, on the complete record, that Petitioner fails to demonstrate, by a preponderance of the evidence, that dependent claims 7, 12, and 13 are unpatentable under 35 U.S.C. § 102(b) as anticipated by Chan.

D. Asserted Grounds of Unpatentability based on Obviousness

Petitioner asserts five grounds of unpatentability based on obviousness. *See* Pet. 14–15.

> Section 103(a) [of 35 U.S.C.] forbids issuance of a patent when "the differences between the subject matter sought to be patented and the prior art are such that the subject matter as a whole would have been obvious at the time the invention was made to a person having ordinary skill in the art to which said subject matter pertains."

KSR Int'l Co. v. Teleflex Inc., 550 U.S. 398, 406 (2007).

The question of obviousness is resolved on the basis of underlying factual determinations, including: (1) the scope and content of the prior art; (2) any differences between the claimed subject matter and the prior art; (3) the level of ordinary skill in the art;[15] and (4) when available, secondary considerations, such as commercial success, long felt but unsolved needs, and failure of others.[16] *Graham v. John Deere Co.*, 383 U.S. 1, 17–18 (1966).

1. Claims 1, 7, and 11–14 are allegedly unpatentable over Parienti and Goldsmith

Petitioner contends that the combination of Parienti and Goldsmith renders claims 1, 7 and 11–14 obvious. Pet. 15. Patent Owner argues (1) that Goldsmith is not analogous art, such that it is not prior art to the ’018 patent, (2) that the combination of Parienti and Goldsmith does not discloses each and every limitation of claim 1, and (3) that a person having ordinary skill in the art would not have had reason to combine Parienti and Goldsmith. PO Resp. 23–47. Petitioner replies to these disputes (Reply 5–18) and Patent Owner responds to the reply arguments (Sur-reply 1–16). We address these three disputes, below, focusing primarily on the third dispute.

a) Goldsmith as analogous art

“To be considered within the prior art for purposes of the obviousness analysis, a reference must be analogous.” *Circuit Check Inc. v. QXQ Inc.*, 795 F.3d 1331, 1335 (Fed. Cir. 2015). Patent Owner contends that Goldsmith is not prior art because Goldsmith is non-analogous art. PO Resp. 44–47. Petitioner responds to this argument (Reply 9–11) and Patent

[15] We address the level of ordinary skill in the art in Section II.A., *supra*.
[16] The record includes extensive evidence directed to secondary considerations. *See* PO Resp. 68–78; Reply 21–27; Sur-reply 19–28.

Owner replies (Sur-reply 9–10). Because we determine that Petitioner fails to provide persuasive reasoning for its proposed modification, our determination does not turn on this issue; thus we assume Goldsmith is analogous art for purposes of this Decision.

b) Subject matter of claim 1

Petitioner contends, in consideration of the scope and content of Parienti and Goldsmith and any differences between the claimed subject matter and these references, that the combination of Parienti and Goldsmith discloses the subject matter of claim 1. Pet. 68–79. Patent Owner disputes whether Parienti discloses a pump body as Petitioner contends and whether the combination of Parienti and Goldsmith discloses a pump body built into the exterior wall of the inflatable body. PO Resp. 39–40, 40–44. Petitioner replies to Patent Owner's contentions (Reply 5–9), and Patent Owner responds to these reply arguments (Sur-reply 1–8). Because we determine that Petitioner fails to provide persuasive reasoning for its proposed modification, our determination would be the same regardless of the outcome of these two disputes, which we do not reach.

c) Reasons to combine Parienti and Goldsmith

As we explain in greater detail below, we find that Petitioner does not provide a persuasive reason, with rational underpinning, for modifying Parienti as Petitioner proposes. *See KSR Int'l Co.*, 550 U.S. at 418 ("[O]bviousness grounds cannot be sustained by mere conclusory statements; instead, there must be some articulated reasoning with some rational underpinning to support the legal conclusion of obviousness." (citing *In re Kahn*, 441 F.3d 977, 988 (Fed. Cir. 2006))).

"[O]bviousness must be determined in light of *all the facts*, and . . . a given course of action often has simultaneous advantages and disadvantages,

and this does not necessarily obviate motivation to combine." *Medichem, S.A. v. Rolabo, S.L.*, 437 F.3d 1157, 1165 (Fed. Cir. 2006) (emphasis added); *see also PAR Pharm., Inc. v. TWI Pharms., Inc.*, 773 F.3d 1186, 1196 (Fed. Cir. 2014) ("The presence or absence of a motivation to combine references in an obviousness determination is a pure question of fact."). We recognize that, "[e]ven under [the] 'expansive and flexible' obviousness analysis [of *KSR*], we must guard against 'hindsight bias' and '*ex post* reasoning.'" *St. Jude Med., Inc. v. Access Closure, Inc.*, 729 F.3d 1369, 1381 (Fed. Cir. 2013) (citation omitted).

Petitioner contends that "it would have been obvious to a [person having ordinary skill in the art] to recess Parienti's housing so that the pump body is recessed into the inflatable body, especially in view of Goldsmith." Pet. 74 (referencing Ex. 1002 ¶ 227). We reproduce Parienti's Figure 4 and Dr. Beaman's modified version of that figure to illustrate Petitioner's proposed modification:

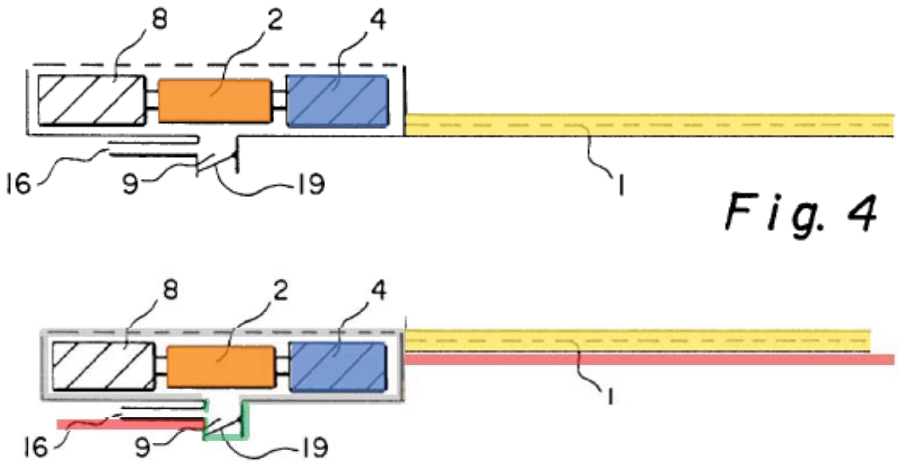

Ex. 1002 ¶¶ 220, 234. The top image shows a colorized (but otherwise unmodified) version of Parienti's Figure 4, including the structure that Petitioner alleges as the pump body (the structure that holds motor 2 (orange) and turbine 4 (blue)) positioned on the exterior wall of mattress 4

(not identified) and extending above solar cell array 1 (yellow). *Id.* at ¶ 220; Ex. 1005, 1:44–46 (describing Figures 4 and 5), 2:56–3:5 (describing the operation of Parienti's inflation device). The bottom image depicts Petitioner's proposed modification, with the alleged pump body (in grey), air outlet (pipe 9, in green), solar cell array (in yellow), and inflatable body exterior wall (in red), with the pump body recessed into the inflatable body and flush with the solar cell array. *Id.*

To support this modification, Petitioner relies on teachings from Goldsmith. Pet. 75–77. We reproduce Petitioner's annotated and colorized versions of Goldsmith's Figures 1 and 6, below:

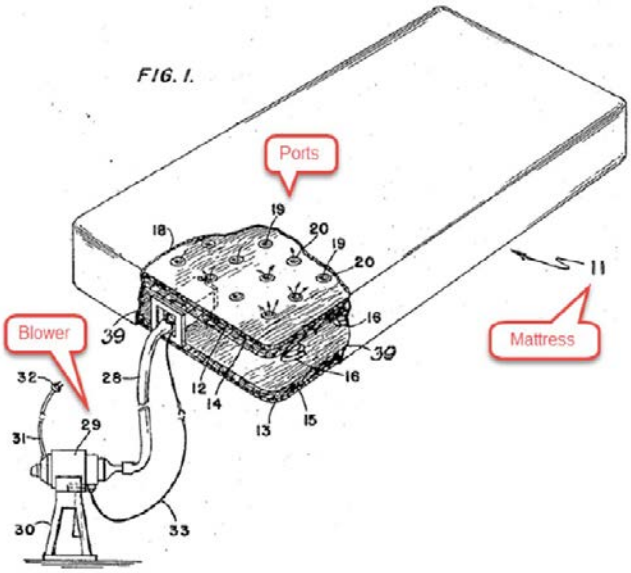

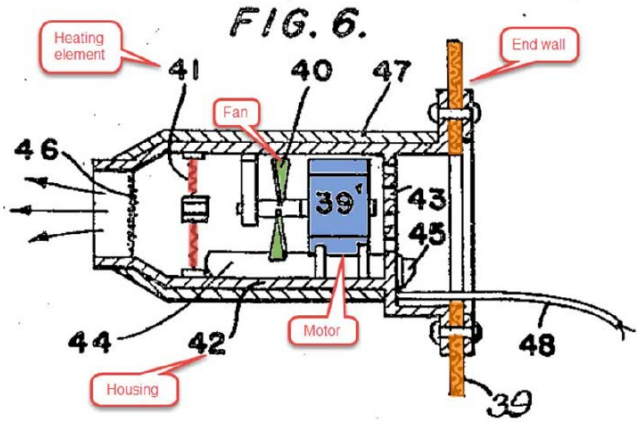

Id. at 75, 76. These figures show Goldsmith's mattress 11 with an external blower and, alternatively, an internal blower. *See id.* Petitioner contends that Goldsmith discloses, in the alternative version depicted in Figure 6, a pump body (housing or casing 42 surrounding fan 40 (in green) and motor 39' (in blue)) that is built into the exterior wall of a mattress and wholly or partially recessed into the mattress, with the end of the casing exposed through the opening in end wall 39 (in orange).

Petitioner contends that a person having ordinary skill in the art would have modified Parienti to include a recessed electric motor housing based on the teachings of Goldsmith for better spatial efficiency and increased durability. Pet. 77 (referencing Ex. 1002 ¶ 231); *compare* Ex. 1007, Fig. 1 (depicting a blower on the floor and hose to the mattress), *with* Fig. 6 (showing blower inside mattress). Petitioner explains that a person having ordinary skill in the art would have understood that recessing Parienti's pump would have reduced the physical impact of the pump on a user lying on mattress 5, creating a spatial efficiency. Pet. 77 (referencing Ex. 1006, 4:50–56). Petitioner argues that a person having ordinary skill in the art "would have appreciated that recessing Parienti's pump device into inflatable mattress 5 would have increased user comfort by reducing the physical impact of the pump on a user lying on mattress 5 and would have created a more even surface, without as large of a bulge at the pump." *Id.* (referencing Ex. 1006, 4:50–56; Ex. 1037, 2:40–52); Ex. 1002 ¶¶ 61–70, 232).

Petitioner also contends that recessing the pump would protect the pump and its components. Pet. 78. Petitioner argues that a person having ordinary skill in the art "recognized that built-in and recessed designs would protect the pump and its components 'from accident, injury, or separation'

from the mattress." *Id.* (referencing Ex. 1017, 1:9–14, 2:123–132, 3:18–22, Fig. 1; Ex. 1039, 1:29–31; Ex. 1002 ¶¶ 233–234).

With respect to the spatial efficiency reasoning, first, Patent Owner argues that Petitioner cannot rely on Chaffee to support its proposed modification, as Chaffee is not prior art. PO Resp. 24. Second, Patent Owner argues that Petitioner's proposed modification does "not yield an appreciable improvement." *Id.* at 25. Patent Owner explains that Parienti's Figure 4 does not show the entire solar cell array, and thus does not show the proper proportional relationship of the alleged pump body to the array. *Id.* Patent Owner continues that Parienti's Figures 1 and 8 show the proper proportional relationship. *Id.* at 25–26.

Patent Owner argues that Parienti's Figures 1 and 8 "show that the pump portion is a small corner of the mattress and that the solar panel is substantially more prominent in size and in its location towards the mid-line of the mattress (i.e., where a user may lay)" and that "the pump portion is a small fractional portion of the mattress which is not in the way of the user." PO Resp. 27. Patent Owner argues that "a user would . . . experience more discomfort from the" solar cell array and "simply making the pump portion flush with the solar panel would not appreciably increase user comfort." *Id.* at 27–28. Patent Owner adds that it would not be safe, as a person on mattress could have his or her hair pulled into the pump body intake. *Id.* (referencing Ex. 2029 ¶¶ 70–71).

Patent Owner adds that recessing the pump would make the pump portion more susceptible to intrusion by water or particulates and that the any advantages would be outweighed by the challenged and costs of recessing the pump portion. PO Resp. 28 (referencing Ex. 2029 ¶ 72). Patent Owner also argues that Parienti discloses, in an alternative

embodiment, that the pump portion can be detached from the mattress and used to operate a cooler box. *Id.* at 28–29 (referencing the alternative embodiment described at Ex. 1005, 3:51–59). Patent Owner asserts that Parienti's elevated design is better, as it discourages a person from laying on the solar panel or pump portion, thus blocking the intake or solar panel, and it reduces the chance that water or debris would enter the pump. *Id.* at 29 (referencing Ex. 2029 ¶ 73).

Patent Owner also argues that the additional references cited by Petitioner to support its motivation to modify Parienti based on Goldsmith do not support the proposed modification. PO Resp. 29–33.

Petitioner replies, first, that Patent Owner's argument that any benefit would not be appreciable based on Parienti's Figures "is flawed," as patent drawings cannot be relied on as to the relative size of components unless the specification states that the drawings are to scale. Reply 12 (citing *Hockerson–Halberstadt v. Avia Grp.*, 222 F.3d 951, 956 (Fed. Cir. 2000)).

Petitioner adds that, even if Patent Owner's argument that any benefit would not be appreciable is true, a particular combination need not yield the most preferred or most desirable modification to provide a motivation for the combination. Reply 12. Petitioner argues that "the clear desirability of the combination comes from eliminating the jagged corner formed by the difference in height between the pump body and solar array of Parienti." *Id.* (referencing Ex. 1625 ¶¶ 69–71).

Second, Petitioner replies that Patent Owner's argument that the modification would be unsafe is not supported. Reply 13. Petitioner adds that protective grid 8 is exposed in Parienti's unmodified design and Parienti is intended to be used outdoors, such that a person having ordinary skill in

the art would have already addressed the concerns identified by Patent Owner. *Id.*

Third, Petitioner argues that Patent Owner's position that a user would not have been adequately deterred from laying over the pump structure is unsupported and contrary to prior art recessed designs. Reply 14 (referencing Ex. 1625 ¶¶ 77–78, 80, which cites to Ex. 1006, Fig. 5; Ex. 1007, Figs. 1, 6; Ex. 1029, Figs. 11, 12; Ex. 1037, Figs. 1–2). Also, Petitioner states that Patent Owner's argument concerning Parienti's alternative embodiment, which Petitioner characterizes as a teaching away[17] argument, "is wrong." Reply 14–15 n.6 (citing *In re Haase*, 542 F. Appx. 962, 967 (Fed. Cir. 2013) (nonprecedential); referencing Ex. 1625 ¶ 79).

Finally, Petitioner replies that Patent Owner, for example, ignores Miller's[18] clear teaching of a compact design with its pump inside its air cell, when Patent Owner criticized the prior art Petitioner relies on in support of its motivation for making the modification. Reply 15–16.

In response to Petitioner's reply arguments, Patent Owner argues, first, that, if Parienti's figures are not to scale, then Petitioner has no basis for its proposed modification, as Petitioner relies on the depicted arrangement of the pump portion relative to the solar cells. Sur-reply 12–

---

[17] Here and elsewhere in its Reply, Petitioner characterizes certain arguments from Patent Owner as potentially "teaching away" arguments. *See* Reply 14 n.6, 16. We do not understand Patent Owner's arguments as teaching away arguments, but rather arguments identifying facts that support an overall finding that a person having ordinary skill in the art would not have been motivated to make the proposed modification. *See, e.g.*, Sur-reply 10 ("The Reply's teaching away discussion is irrelevant because it was not argued.").

[18] Miller. US 5,529,377, issued June 25, 1996 (Ex. 1037).

13.[19] Patent Owner continues that "Petitioners assert that Parienti does not provide dimensions through its figures, so there is no height information to determine there is a jagged corner . . . [so] it could be of minimal height or in a location so as never to impact the user." *Id.* at 13.

Second, Patent Owner distinguishes Chaffee, Adams[20], and Goldsmith, on which Petitioner relies to support its assertion that the proposed modification would realize spatial efficiency. Sur-reply 13–14. Third, Patent Owner argues that its contention that there are advantages of Parienti's current profile is not rebutted by Petitioner. *Id.* at 14. Finally, Patent Owner counter's Dr. Beaman's reliance on Goldsmith and Rand[21]. *Id.*

With respect to Petitioner's durability reasoning, Patent Owner first contends that the design would be less durable. PO Resp. 33. As Patent Owner explains, the proposed modification requires Parienti's relatively small opening in its mattress to be enlarged to accommodate the entire perimeter of the alleged pump body, then sealed around that perimeter. *Id.* Patent Owner asserts that "[s]ealing that perimeter would require additional steps to complete and is more likely to leak than Parienti's design . . ., [making it] less durable. *Id.* (referencing Ex. 2029 ¶ 79).

Second, Patent Owner argues that the modified design would need to account for any impact of the recessed portion on the bottom layer of the

---

[19] Patent Owner asks us to dismiss Grounds 5 and 6 for lack of proof of any motivation because based on Petitioner's characterization that the relative depictions of components in Parienti's drawings cannot be relied upon, the relative dimensions cannot then be used to support obviousness. Sur-reply 13. We decline to take this step.
[20] Adams, US 4,862,533, issued Sept. 5, 1989 (Ex. 1029).
[21] Rand, US 2,719,986, issued Oct. 11, 1955 (Ex. 1022).

mattress. PO Resp. 34–35. Patent Owner argues that adding Goldsmith's rigid structure to support the pump body was not proposed and would not work with Parienti's mattress. *Id.* Finally, Patent Owner explains why Dr. Beaman's testimony and the cited prior art references do not support Petitioner's durability reasoning. *Id.* at 35–39.

Petitioner replies that Dr. Stevick testifies that ultrasonic welding or glue would be used in the proposed modification and would result in an airtight seal that would not gradually come apart. Reply 16 (referencing Ex. 1601, 137:2–138:4, 135:20–136:5, 212:2–213:1, 263:14–22, 265:18–24, 269:13–18, 289:2–18, 290:7–11; Ex. 1602, 588:1–21, 677:15–19; Ex. 1635, 500:23–501:22). Petitioner also states that prior art designs demonstrate that Patent Owner's concerns over leakage did not deter similar designs. *Id.* at 16–17 (referencing Ex. 1006, 4:63–5:3, Figs. 1–2; Ex. 1017, 1:53–62, 2:128–129, 3:10–18, Figs. 1–2; Ex. 1029, 3:32–35, Figs. 11–12; Ex. 1035, Fig. 1, 2:51–53; Ex. 1036, 1:38–40, Figs. 1–2; Ex. 1037, 3:27–36, Figs. 1–2).

Second, Petitioner again argues that Patent Owner's criticism of Petitioner's supporting evidence is cursory. Reply 17. For example, Petitioner explains, contrary to Patent Owner's position, how Hargin[22] is broadly applicable to air mattresses and discloses that a recessed design protects the pump. *Id.*

In response to Petitioner's reply arguments, Patent Owner first argues that Petitioner does not dispute that Goldsmith's approach for stabilizing the pump is not workable with Parienti. Sur-reply 15. Patent Owner also argues that Petitioner ignores that changing Parienti's small opening to a large one

[22] Hargin, US 388,037, issued Aug. 21, 1888 (Ex. 1017).

to accommodate the pump increases stress on the mattress. *Id.* Patent Owner continues that Petitioner's reliance on "Exhibits 1601, 1602, and 1635 are entirely irrelevant" and that Chaffee is not prior art. *Id.*

Second, Patent Owner responds that Petitioner tries to rely on other prior art to expand its obviousness position, including some art that was cited during prosecution of the application that matured into the '018 patent, which illustrates the weakness in Petitioner's position. Sur-reply 15–16.

We have weighed the evidence of record presented by Petitioner and Patent Owner in light of the parties' arguments and determine that Petitioner has not demonstrated, by a preponderance of the evidence, that a person having ordinary skill in the art would have been motivated to modify Parienti to recess its alleged pump body as proposed by Petitioner based on the teachings of Goldsmith. Specifically, we find that Petitioner does not provide persuasive factual underpinnings for its reasoning. With respect to spatial efficiency, although the proposed modification "would have created a more even surface, without as large of a bulge at the pump" as Petitioner contends (*see* Pet. 77), we find that Petitioner's evidence does not persuasively support a finding that a person having ordinary skill in the art would have made the modification for spatial efficiency reasons, that is, to "reduce[] the physical impact of the pump on a user lying on mattress 5." *See* Pet. 77. Petitioner's primary basis for its purported advantage is to eliminate the "jagged corner" resulting from the different heights of the alleged pump body and solar cell array. Reply 12. We agree with Patent Owner, however, that Petitioner has not demonstrated the degree to which this "jagged corner" is an issue, as Parienti's figures are ambiguous as to the relative orientation of the alleged pump body and solar cell array. *See* PO Resp. 24–27 (discussing the configuration of Parienti's pump portion and

solar cell array); Sur-reply 12–13 ("[T]here is no proof of substantial height of the alleged "jagged corner.") (emphasis omitted). Based on our review of Parienti, we find that the only conclusion that can be drawn from its disclosure is that there is some height difference between the alleged pump body and solar cell array, as shown in Figures 4 and 5. Ex. 1005, Figs. 4, 5. Based on our review of the entirety of Parienti, we find that it is impossible to determine the extent of this height difference. For example, Figure 1 seems to show no height difference and Figure 8 shows some height difference. *See id.* at Figs. 1, 8. The written description is silent as to any height difference. *See id.*

We do not credit Dr. Beaman's testimony in support of Petitioner's spatial efficiency reasoning, as his testimony is not adequately supported. As an initial point, Dr. Beaman's testimony is essentially identical to the arguments in the Petition. *Compare* Ex. 1002 ¶¶ 231–232, *with* Pet. 77. Such testimony does not provide any additional supporting evidence over the attorney argument of record. *See* 37 C.F.R. 42.65(a) ("Expert testimony that does not disclose the underlying facts or data on which the opinion is based is entitled to little or no weight."). Next, Dr. Beaman's statement that the modification would reduce the opportunity to impact or interfere with a user of the mattress and increase comfort is without persuasive support. *See* Ex. 1002 ¶ 232. The proposed modification would still be above the surface of the mattress, flush with the solar cell array. *Id.* ¶ 234 (depicting modified configuration). The *same amount of surface area* of the mattress would be dedicated to the structures above the surface of the mattress, such that there would be a comparable opportunity to interfere with a user. *See* PO Resp. 24–27; Ex. 2029 ¶ 72 ("A [person having ordinary skill in the art] would appreciate . . . that the solar array provides more of an obstruction that the

pump portion.”).[23] Neither Petitioner nor Dr. Beaman persuasively explains how a modification that results in the same surface area covered by the pump structure would reduce the physical impact of the pump on someone lying on the mattress.

Having determined that Chaffee is not prior art, we accord Dr. Beaman’s reliance on Chaffee minimal weight.[24] *See* Ex. 1002 ¶ 232. Even if we considered Chaffee, we find that it fails to support persuasively

---

[23] We credit this testimony of Dr. Stevick, as it is supported by the disclosure in Parienti. Dr. Beaman did not address this specific testimony in his reply declaration. *See* Ex. 1625 ¶¶ 65–82 (addressing certain testimony in Dr. Stevick’s declaration paragraph 72, but not concerning the solar arrays offering more of an obstruction than the pump structure). We do not credit Dr. Stevick’s testimony in paragraphs 69–71, as that testimony is nearly identical to the attorney argument presented in the Patent Owner Response. *Compare* PO Resp. 24–28, *with* Ex. 2029 ¶¶ 69–71.

[24] In his reply declaration, Dr. Beaman testifies that counsel informed him that “independently made, simultaneous inventions, made within a comparatively short space of time—as is true of Chaffee and the ’018 [p]atent—can be persuasive evidence that the claimed apparatus was the product only of ordinary mechanical or engineering skill.” Ex. 1625 ¶ 82 n.6. We address Petitioner’s contentions about Chaffee and simultaneous invention below. Dr. Beaman, however, relies on Chaffee for what was “well-known at the time,” not as evidence that the modification was within the level of ordinary skill. Ex. 1002 ¶ 232. Dr. Beaman fails to explain persuasively how Chaffee discloses what was *well known* at the time of the invention of the ’018 patent, absent any teaching in that reference of what was well known, or to otherwise direct us to teachings of the state of the prior art in Chaffee. *See* Ex. 1625 ¶ 82; *cf. Yeda Research v. Mylan Pharm. Inc.*, 906 F.3d 1031, 1041 (Fed. Cir. 2018) (“The Board has recognized that non-prior art evidence of what was known ‘cannot be applied, independently, as teachings separately combinable’ with other prior art, but ‘can be relied on for their proper supporting roles, e.g., indicating the level of ordinary skill in the art, what certain terms would mean to one with ordinary skill in the art, and how one with ordinary skill in the art would have understood a prior art disclosure.’”).

Dr. Beaman's position. Dr. Beaman fails to explain persuasively how Chaffee's statements about its recessed pump, located at the side of an air mattress, would motivate a person having ordinary skill in the art to slightly recess Parienti's top-mounted pump structure such that it was flush with the solar cell array, yet still extended above the mattress surface. *See, e.g.*, Ex. 1005, Figs. 1, 2 (showing a pump extending from the side wall of a prior art mattress and a pump totally recessed into the side wall of a mattress); *compare id.*, *with* Ex. 1006, Fig. 1.

We accord Dr. Beaman's reliance on Miller minimal weight, as Dr. Beaman fails to explain persuasively its applicability to Petitioner's proposed modification. Dr. Beaman references Miller's disclosure that a pump disposed within an air cell provides a compact design to reduce space requirements. *Id.* Miller's design, however, disposes the entire pump within its air cell. Ex. 1037, Fig. 2 (depicting pump 24 entirely within air cell 20), 3:31–33 ("[A]ir cell module 14 further comprises an electric motor driven air pump subassembly 24 that is disposed inside the air cell 20."). We find that Miller does not persuasively support Petitioner's proposed recessing of Parienti's alleged pump body partially into the mattress.[25] *See also* PO Resp. 30 ("The space taken up by the pump of the Parienti bed is not reduced nor does it change how compact the bed is when folded up. Accordingly, a [person having ordinary skill in the art] would not rely on

[25] Although claim 1 recites "wherein the pump body is . . . wholly or partially recessed into the inflatable body," Petitioner's proposed modification is for the pump body to be *partially* recessed, not wholly recessed. *See* Ex. 1001, 7:32–33; Ex. 1002 ¶ 234.

Miller in view of Parienti and Goldsmith."); Ex. 2029 ¶ 75 (providing identical testimony).[26]

Dr. Beaman's testimony in support of Petitioner's Reply does not change our findings, as we give this testimony little weight. First, this testimony addresses Dr. Stevick's declaration testimony, which we do not credit, for the most part. *See* Ex. 1625 ¶¶ 66–81. Next, Dr. Beaman recognizes that Parienti is silent as to whether its figures are proportional, and this ambiguity undercuts Petitioner's position. *Id.* ¶ 71. Finally, we find that Dr. Beaman's reliance on other prior art is unpersuasive, as these references do not adequately support Petitioner's reasoning. *See id.* at ¶ 82 (identifying Chaffee, Goldsmith, Bock[27], Rand, and "numerous other" references). We addressed Chaffee above. We address these other references in turn, below.

Goldsmith discloses eliminating an *external* pump and replacing it with a wholly recessed pump. Ex. 1007, Figs. 1, 6. Dr. Beaman fails to explain how this change from completely external to completely recessed pump supports Petitioner's proposed modification of slightly recessing Parienti's pump. Ex. 1625 ¶ 82. Bock discloses a pump within a compact housing that is applied to a patient's limb to provide compression. Ex. 1027, Abstract. Dr. Beaman provides no explanation of how Bock's device has any relevance to Petitioner's proposed modification. *See* Ex. 1625 ¶ 82. Rand discloses that its external pump, used to inflate a mattress that is placed on top of an existing mattress, could be located under the bed, so that

[26] We do not agree with Petitioner that Patent Owner provided only a cursory evaluation of the evidence on which the Petition relies to support its spatial efficiency reasoning. *See* Reply 15; PO Resp. 29–33.
[27] Bock et al., US 5,876,359, issued Mar. 2, 1999 (Ex. 1027).

it is inconspicuous. Ex. 1022, 2:3–11, Fig. 1. Again, Dr. Beaman provides no explanation of how Rand's teaching of hiding its pump under a bed has any relevance to Petitioner's proposed modification. *See* Ex. 1625 ¶ 82. Finally, we have reviewed the "numerous other prior art" references identified by Dr. Beaman, which he does not further explain, and find that they do not support Petitioner's reasoning that a person having ordinary skill in the art would have been motivated to make Petitioner's proposed modification because of spatial efficiency. *See, e.g.*, Ex. 1017, 1:53–62, 2:218–129, 3:10–18, Figs. 1–2 (disclosing a pump *totally enclosed* in an air mattress that can also be used as a life raft); Ex. 1029, 3:32–35, Figs. 11–12 (disclosing a pump disposed entirely within a mattress); Ex. 1030, 5:53–6:9, Fig. 7A (disclosing an inflatable human form with an internal pump, but also disclosing that the pump may be external or detachable); Ex. 1031, Fig. 1, 3:25 (disclosing a massage cushion that takes up little space when not in use); Ex. 1035, Fig. 1, 2:51–53 (disclosing a pump totally enclosed in an air mattress); Ex. 1036, 1:38–40, Figs. 1–2 (disclosing a pump totally enclosed in an air mattress); Ex. 1039, 1:29–31 (indicating an objective of the invention is to provide a pump that is resistant to chemical and physical attack).

With respect to increased durability, we find that Petitioner's evidence does not persuasively support that a person having ordinary skill in the art would have been motivated to make the proposed modification based on a desire for an increase in durability. As we explain in greater detail below, we find that, on balance, Petitioner has not persuasively demonstrated that the modification would even result in an increase in durability. Specifically, Petitioner's arguments and evidence do not persuasively support a finding that a person having ordinary skill in the art "recognized that built-in and

recessed designs would protect the pump and its components 'from accident, injury, or separation' from the mattress." Pet. 78.

Instead, we agree with Patent Owner that the proposed modification would introduce negative impacts on durability by greatly increasing the size of the opening in mattress 5 to accommodate the perimeter of the alleged pump housing. PO Resp. 33 (referencing Ex. 2029 ¶ 79). As Parienti currently discloses, mattress 5 has a small opening that accommodates pipe 9. *See* Ex. 1005, Figs. 4, 7. The proposed modification would increase the perimeter distance that would need to be sealed to the pump body, which would create a greater chance that the air mattress would leak. PO Resp. 33.

We do not credit Dr. Beaman's testimony in support of the durability reasoning, as his testimony is not adequately supported. Again, we note that paragraphs 233 and 235 of Dr. Beaman's declaration is almost identical to the language in the Petition, and paragraph 234 provides an explanation of the proposed modification, but no other testimony directed to the motivation for the modification. We find that Dr. Beaman's reliance on Hargin is misplaced. Ex. 1002 ¶ 233 (referencing Ex. 1017, Fig. 1, 1:9–14, 2:123–132, 3:18–22). Hargin discloses an air mattress that may be used as a lifesaving raft. Ex. 1017, 1:2–18. Further, Hargin discloses that the pump must be wholly enclosed in the mattress because the mattress is adapted for use as a life raft, such that the pump needs to be located inside the airtight enclosure, "to protect [the pump] from accident, injury, or separation *when plunged into water*." *Id.* at 2:123–132 (emphasis added); *see also id.* at 3:18–22 ("I thus avoid the exposure of the pump and its connecting pipes to accidental injury or separation from the mattress when thrown into water as a life raft."). That is, the statement that Dr. Beaman relies on—that enclosing the pump protects it from accident, injury, or separation—is

directed to using the mattress as a life raft *in water*. Dr. Beaman fails to explain adequately how this use as a life raft supports the proposed modification of Parienti. *See* PO Resp. 35 (discussing the inapplicability of Hargin).[28] Also, unlike the proposed modification, Hargin *fully encloses* its pump. *Id.* at 2:123–132.

Dr. Beaman's reliance on Pinkwater[29] is also unavailing. *See* Ex. 1002 ¶ 233 (referencing Ex. 1039, 1:29–31). Again, unlike the proposed modification, Pinkwater is directed to a pump that is totally enclosed in an inflatable structure. Ex. 1039, 1:12–15. Pinkwater indicates that an objective of the invention is to protect the pump from chemical and physical attack, such as from moisture or oxidation, a statement on which Dr. Beaman relies. *Id.* at 1:29–31; *see* Ex. 1002 ¶233 (quoting Pinkwater's statement about resistance to chemical and physical attack). Pinkwater discloses that this objective is satisfied by having a one-piece molded pump structure. *Id.* at 2:36–69. Contrary to the implication from Dr. Beaman's testimony, Pinkwater does not rely on enclosing (or recessing) its pump to protect the pump from chemical and physical attack. Again, even if Pinkwater discloses an advantage of having its pump enclosed, the pump is totally enclosed, which is not the proposed modification here. *See id.*, Figs. 1–3; *see also* PO Resp. 36 ("A [person of ordinary skill in the art] would understand that Petitioners' proposed recessed modification of Parienti would be more susceptible to chemicals and moisture than Parienti's original design." (referencing Ex. 2029 ¶¶ 83–84)).

---

[28] We do not agree with Petitioner that Patent Owner provided only a cursory evaluation of the evidence on which the Petition relies to support its durability reasoning. *See* Reply 17; PO Resp. 35–39.
[29] Pinkwater, US 3,068,494, issued Dec. 18, 1962 (Ex. 1039).

Dr. Beaman's reply testimony does not alter our factual findings. First, Dr. Beaman's reliance on Dr. Stevick's testimony is misplaced, as Dr. Stevick was testifying about a configuration with the pump placed within a mattress, which is not Petitioner's proposed modification. Ex. 1636, 663:1–4, 664:4–13; *see* Ex. 1625 ¶ 83 (referencing Ex. 1636, 663:1–4, 664:4–13). With respect to an increased risk of leakage, although we agree with Dr. Beaman that the '018 patent does not address any concern about sealing the pump into the side of a mattress (Ex. 1625 ¶ 84), his testimony does not persuasively explain why increasing the perimeter of the pump body that would include heat-sealed seams would not have a commensurate increase in the risk of leaking or how any increase in risk is insufficient to overcome the purported increase in durability. Dr. Beaman does testify that the solar cell array would provide support for the pump structure, such that the larger opening would not experience greater stresses, but provides no support for this testimony. Ex. 1625 ¶ 86. Dr. Beaman does not persuasively explain why, given this larger opening, the continued support of the pump by the solar cell array would compensate for the additional amount of sealed seams. We are also not persuaded by Dr. Beaman's reliance on prior art designs to demonstrate that any increased risk of leakage was not a deterrent to the proposed modification. *Id.* at ¶ 88 (referencing Exs. 1006, 1017, 1029, 1030, 1031, 1035, 1036, and 1037). With the exception of Chaffee (Ex. 1006), which we have discussed above, with one exception, these references disclose pumps that are completely enclosed, not partially recessed as in Petitioner's proposed modification.[30]

[30] Exhibit 1031, which Dr. Beaman does not describe, appears to include a compressor housing 20 attached to the exterior of massage cushion and not recessed. Ex. 1031, 2:37–41, Fig. 1.

Finally, neither Petitioner nor Dr. Beaman persuasively explain how slightly recessing the alleged pump body of Parienti, which already protects Parienti's motor and turbine, would result in an increase in the durability of the alleged pump body or of the components it contains. The proposed modification merely reduced the height of the alleged pump body relative to the solar cell array and positions a *portion* of that structure within the mattress. Petitioner does not persuasively explain how having this portion of the alleged pump body slightly recessed makes the pump body more durable or makes the motor and turbine it contains more durable. That is, Petitioner fails to support persuasively that such a modification would be motivated by an increase in durability of the alleged pump body or its components.

In summary, we find, based on weighing all of the evidence and considering the parties' arguments, that Petitioner's reasoning does not persuasively include rational factual underpinnings. Our fact finding analysis considers the entirety of the record, including both advantages and disadvantages to the proposed modification and concludes that we are not persuaded by Petitioner's evidence. *Medichem, S.A.*, 437 F.3d at 1165 (requiring us to consider all facts and weigh the advantages and disadvantages of a proposed motivation to combine teachings). As such, we find that Petitioner does not persuasively support its assertion that a person having ordinary skill in the art would have had reason to modify Parienti as proposed.

We also note that, although not required, neither Parienti nor Goldsmith discloses the proposed modification, as Goldsmith discloses a configuration with the pump body disposed well inside of the bed's mattress, rather than only partially recessed. *See* Ex. 1007, Fig. 6. Also, as mentioned

above, most of the other prior art references relied on by Petitioner and Dr. Beaman to support their motivation for the proposed modification disclose pumps that are entirely enclosed within the mattress, yet Petitioner's proposed modification is to *partially* recess Parienti's pump body. Indeed, in reviewing the complete record, it appears that Petitioner's proposed modification most closely resembles the '018 patent's Figure 14, suggesting that the proposed modification may be more the product of hindsight than an obvious modification. *See* Ex. 1001, Fig. 14; *St. Jude Med., Inc.*, 729 F.3d at 1381 (cautioning against hindsight bias).

d) Secondary considerations

Secondary considerations, when present, must always be considered as part of an obviousness inquiry. *Transocean Offshore Deepwater Drilling, Inc. v. Maersk Drilling USA, Inc.*, 699 F.3d 1340, 1349 (Fed. Cir. 2012); *see* PO Resp. 62–70 (discussing secondary considerations); Reply 22–27 (same); Sur-reply 18–26 (same). Because we find that Petitioner has not demonstrated, by a preponderance of the evidence, that a person having ordinary skill in the art would have been motivated to make Petitioner's proposed modifications to arrive at the invention of claim 1, we need not address Patent Owner's secondary consideration evidence here. We do, however, take this opportunity to address Petitioner's objective evidence of obviousness.

Petitioner argues that "Chaffee constitutes an independent, near-simultaneous development of the claimed subject matter, which provides strong objective indicia of obviousness." Reply 26 (referencing Ex. 1625 ¶¶ 113–119). Petitioner does not further explain how Chaffee represents near-simultaneous invention in its Reply. *See id.* Dr. Beaman's declaration does include an analysis of how Chaffee constitutes independent, near-

simultaneous invention, by comparing the subject matter of certain Challenged Claims to the disclosure in the Chaffee ’836 provisional and Chaffee. *See* Ex. 1625 ¶¶ 113–119. First, we disregard this analysis, as it is improperly incorporated by reference into Petitioner’s Reply. The Reply merely provides the conclusory statement we quote above and references Dr. Beaman’s declaration. Dr. Beaman provides analysis *and argument* in the referenced paragraphs. *See, e.g., id.* ¶ 114 (providing argument that “there can be no real dispute that Chaffee developed his invention of the named-inventor of the ’018 [p]atent”), ¶ 117 (arguing that certain subject matter, although not disclosed in the Chaffee Provisional, is disclosed in Chaffee), ¶118 (arguing that Chaffee “constitutes a near-simultaneous invention to the ’018 patent”). When we consider Petitioner’s Reply arguments and evidence as a whole, we do not consider any “arguments” found only in Dr. Beaman’s testimony and not adequately explained in the Reply. *See* Patent Trial and Appeal Board, Trial Practice Guide Update, 17–18 (August 2018) (“Trial Practice Guide August Update”), available at https://go.usa.gov/xU7GP; *cf.* Paper 69, 5 (addressing Petitioner’s motion to strike portions of the Patent Owner Response that Petitioner contends improperly incorporate arguments into the Patent Owner Response and stating “the proper approach in such a situation is for the Board, when considering the arguments and evidence as a whole, to not consider any ‘arguments’ found only in a declaration and not adequately explained in the Patent Owner’s Response”); *see also* Office Patent Trial Practice Guide, August 2018 Update, 83 Fed. Reg. 39,989 (Aug. 13, 2018) (notice).

Second, Dr. Beaman’s analysis does not persuasively support Petitioner’s conclusory statement in its Reply, as it merely demonstrates that information in the Chaffee ’836 Provisional, together with information in

Chaffee, corresponds to the claimed subject matter of the Challenged Claims. "[T]he possibility of near simultaneous invention by two or more equally talented inventors working independently, . . . *may or may not be an indication of obviousness* when considered in light of *all the circumstances*." *Ecolochem, Inc. v. S. Calif. Edison Co.*, 227 F.3d 1361, 1379 (Fed. Cir. 2000) (quoting *Lindemann Maschinenfabrik GmbH v. Am. Hoist & Derrick Co.*, 730 F.2d 1452, 1460 (Fed. Cir. 1984)) (emphasis added). Dr. Beaman does not adequately explain why, *when considered in light of all the circumstances*, the invention of claim 1 of the '018 patent "was the product only of ordinary mechanical or engineering skill" (*Geo. M. Martin Co. v. All. Mach. Sys. Int'l LLC*, 618 F.3d 1294, 1305 (Fed. Cir. 2010)). Accordingly, we do not afford any weight to this evidence.

e) Conclusion as to claim 1

We determine, based on the complete record, that Petitioner fails to demonstrate, by a preponderance of the evidence, that claim 1 is unpatentable under 35 U.S.C. § 103 over Parienti and Goldsmith.

f) Conclusion as to claims 7 and 11–14

Claims 7 and 11–13 depend, directly or indirectly, from claim 1. Petitioner relies on its analysis of claim 1 for its position that claim 14 is unpatentable. Pet. 87. For the reasons discussed above in connection with our analysis of claim 1, we determine, based on the complete record, that Petitioner fails to demonstrate, by a preponderance of the evidence, that claims 7 and 11–14 are unpatentable under 35 U.S.C. § 103 over Parienti and Goldsmith.

2. Claim 5 is allegedly unpatentable over Chaffee and Walker

Petitioner contends that the combination of Chaffee and Walker renders claim 5 obvious. Pet. 15. As we discussed above in connection with

our analysis of Chaffee allegedly anticipating claim 1, from which claim 5 depends, we find that Chaffee is not prior art to the ’018 patent. Accordingly, we determine, based on the complete record, that Petitioner fails to demonstrate, by a preponderance of the evidence, that claim 5 is unpatentable under 35 U.S.C. § 103 over Chaffee and Walker.

3. Claims 5 and 11 are allegedly unpatentable over Chan and Walker

Petitioner contends that the combination of Chan and Walker renders claims 5 and 11 obvious. Pet. 15. As discussed above in connection with our analysis of Chan allegedly anticipating claim 1, we find that Chan fails to disclose each and every claim limitation of claim 1, from which claims 5 and 11 depend. Petitioner does not allege that Walker remedies the deficiency in Chan. *See* Pet. 63–69 (addressing the additional subject matter of claims 5 and 11 only). Accordingly, we determine, based on the complete record, that Petitioner fails to demonstrate, by a preponderance of the evidence, that claims 5 and 11 are unpatentable under 35 U.S.C. § 103 over Chan and Walker.

4. Claim 5 is allegedly unpatentable over Parienti, Goldsmith, and Walker

Petitioner contends that the combination of Parienti, Goldsmith, and Walker renders claim 5 obvious. Pet. 15. As discussed above in connection with our analysis of Parienti and Goldsmith allegedly rendering obvious claim 1, we determine that Petitioner fails to demonstrate that a person having ordinary skill in the art would have been motivated to make Petitioner’s proposed modification to arrive at the subject matter of claim 1, from which claim 5 depends. Petitioner does not allege that Walker remedies the deficiency in its position with respect to claim 1 as obvious

over Parienti and Goldsmith. Accordingly, we determine, based on the complete record, that Petitioner fails to demonstrate, by a preponderance of the evidence, that claim 5 is unpatentable under 35 U.S.C. § 103 over Parienti, Goldsmith, and Walker.

5. Claims 1, 7, and 11–14 are allegedly unpatentable over Chaffee

Petitioner contends that Chaffee alone renders claims 1, 7 and 11–14 obvious. Pet. 15. As we discussed above in connection with our analysis of Chaffee allegedly anticipating claim 1, we find that Chaffee is not prior art to the ’018 patent. Accordingly, we determine, based on the complete record, that Petitioner fails to demonstrate, by a preponderance of the evidence, that claims 1, 7 and 11–14 are unpatentable under 35 U.S.C. § 103 over Chaffee.

E. Motions to Exclude

1. Petitioner’s motion to exclude evidence

Petitioner filed a motion to exclude certain exhibits that Petitioner contends are not cited in the Patent Owner Response, Sur-reply, or any expert declaration. Paper 96, 1. Petitioner seeks to exclude this evidence (the “Uncited Exhibits”) as irrelevant under Federal Rules of Evidence Rules 401 and 402. *Id.* Petitioner also argues that certain paragraphs in Ex. 2029 (Dr. Stevick’s Declaration) and Ex. 2638 (Dr. Becker’s Declaration) (the “Declaration Portions”) should be excluded. *Id.* at 3–7.

a) Uncited Exhibits

With respect to the Uncited Exhibits (Exs. 2031, 2032, 2033, 2034, 2035, 2041, 2042, 2043, 2751, and 2755), Petitioner argues that prior Board decisions provide that exhibits not cited in a patent owner’s papers should be excluded. Paper 96, 1–2.

In opposition, Patent Owner first argues that one of the exhibits, Exhibit 2755, was cited in the Sur-reply (at page 24). Paper 99, 1. Patent Owner next argues that prior Board decisions support not excluding uncited exhibits and ruling a motion directed to such exhibits as moot. *Id.* at 1–4. Next, Patent Owner argues that certain exhibits are cited in deposition testimony. *Id.* at 4. Specifically, Patent Owner argues that Exhibits 2031, 2032, and 2033, and 2751 are exhibits to Dr. Beaman's deposition testimony (Exhibit 2040, the "December Deposition" or Exhibit 2753, the "May Deposition") and that the depositions are cited in Patent Owner's papers. *Id.* at 4–5. Patent Owner adds that Petitioner did not properly object to the evidence, as they did not object to the evidence during the depositions. *Id.* at 5.

Petitioner notes, with respect to Exhibits 2034, 2035, 2042, and 2043, Patent Owner does not contest their exclusion. Paper 103, 1 n.1. Next, Petitioner distinguishes Board cases on which Patent Owner relies. *Id.* at 1–3. Petitioner further replies that Patent Owner does not identify where in its papers it relies on Dr. Beaman's testimony directed to any of the exhibits challenged by the motion (Exhibits 2031, 2032, 2033, and 2751). *Id.* at 3–4. Petitioner also argues that Patent Owner's argument that Petitioner failed to object at the deposition is nonsensical. *Id.* at 4. Petitioner argues that they could not have known at the time of the deposition that Patent Owner would not rely on those exhibits in its later-filed papers. *Id.*

As to Exhibits 2034, 2035, 2041, 2042, and 2043, which are not contested by Patent Owner, we deny Petitioner's motion as moot, as we do not rely on them in this Final Written Decision. *See* Trial Practice Guide August Update 17 ("In the Board's experience, consideration of the

objected-to evidence is often unnecessary to resolve the patentability of the challenged claims, and the motion to exclude is moot.”).

We also deny Petitioner’s motion as to the other Uncited Exhibits (Exhibits 2031, 2032, 2033, 2041, 2751, and 2755). As Patent Owner explains, Exhibit 2755 was cited in its Sur-reply. *See* Sur-reply 23–24. As for Exhibits 2031, 2032, 2033, and 2751, these exhibits were used in conducting Dr. Beaman’s December Deposition (Ex. 2040) and May Deposition (Ex. 2753) and the complete deposition transcript is in the record. Because we do not rely on these exhibits in our Final Written Decision, nor do we rely on Dr. Beaman’s deposition, the motion as to these exhibits is moot.

b) Declaration Portions

With respect to the Declaration Portions, Petitioner argues that this evidence represents arguments that are improperly incorporated by reference by Patent Owner. Paper 96, 3–7.

Patent Owner argues that a motion to exclude evidence is not the proper vehicle to address incorporation by reference. Paper 99, 6. Patent Owner explains that we ruled on a motion to strike directed to the Declaration Portions. *Id.*; *see* Paper 69 (providing an Order denying Petitioner’s motion to strike). Patent Owner also argues that Petitioner’s motion does not provide an adequate basis for relief, explaining that the motion relies on arguments incorporated from other documents. Paper 99, 7–9. Petitioner reiterates that the Declaration Portions were improperly incorporated by reference into the Patent Owner Response. Paper 103, 4–5.

We deny Petitioner’s motion to exclude the Declaration Portions. Motions to exclude evidence are used to exclude evidence that is not admissible. *See* Trial Practice Guide August Update 16–17. Petitioner does

not argue that the Declaration Portions represent *inadmissible* evidence. *See* Paper 96, 3–7. Instead, Petitioner argues that the Declaration Portions represent improper argument, rather than evidence. *See id.* Petitioner fails to provide any basis under the Federal Rules of Evidence as to why the Declaration Portions are inadmissible. *See id.*; Trial Practice Guide August Update 16 ("A motion to exclude must explain why the evidence is not admissible (e.g., relevance or hearsay)."). Although Petitioner did object to Exhibits 2029 and 2638 based on the Federal Rules of Evidence, these objections were directed to bases not argued in its motion. *See* Paper 49, 1, 18. As such, Petitioner has not adequately explained why the Declaration Portions are inadmissible.

Petitioner appears to use the motion to exclude to reargue its motion to strike, this time trying to exclude the underlying declaration paragraphs, rather than the sections of the Patent Owner Response that allegedly incorporate by reference these paragraphs. *See* Paper 96; *see also* Paper 69 (providing our decision on Petitioner's motion to strike portions of the Patent Owner Response). We already addressed Petitioner's motion to strike and explained how we would address any arguments improperly incorporated by reference. Paper 69. As an alternative basis for denying the motion, in this Final Written Decision, we do not consider any of the alleged arguments in the Declaration Portions, as they are directed to Patent Owner's secondary considerations evidence, which we did not reach here.

2. Patent Owner's motion to exclude evidence

We now turn to Patent Owner's motion to exclude evidence. In this motion, Patent Owner first "objects to Exhibits 1665–1669 on the ground that they contain improper attorney argument in violation of the page/word count limits for replies." Paper 97, 1. Second, Patent Owner contends that

Exhibit 1625, Dr. Beaman's declaration supporting the Reply, mischaracterizes certain earlier testimony of Patent Owner's expert and exceeds the proper scope of a reply. *Id.* at 3. Third, Patent Owner objects, provisionally, to Exhibit 1650, a declaration by Ryan Slate, because Patent Owner was not afforded an opportunity to depose the declarant. *Id.* at 5.[31] Fourth and finally, Patent Owner contends that Exhibits 1651–1654 and 1679 include hearsay, are irrelevant, are unfairly prejudicial, and lack foundation. *Id.* at 5. We address each of these categories in turn, below.

In opposition to this motion, Petitioner argues that Patent Owner's motion to exclude fails to follow our rules and procedures for a motion to exclude and that we should deny the motion, in its entirety, on that basis. Paper 100, 1–2 (quoting the Trial Practice Guide August Update). We decline to deny Patent Owner's motion on this basis. We note that Petitioner's motion, which we addressed above, also fails to follow the procedure outlined in the Trial Practice Guide August Update. *See* Paper 96.

a) Exhibits 1665–1669

Patent Owner argues that Exhibits 1665 through 1669 improperly incorporate attorney argument into Petitioner's Reply. Paper 97, 1–3. These exhibits are directed to Petitioner's allegations that Patent Owner improperly incorporates arguments from declarations into its Patent Owner Response. *See id.*

In opposition, Petitioner argues that Patent Owner does not cite any evidentiary basis for excluding these exhibits and that a motion to exclude is not the proper procedure to challenge these exhibits. Paper 100, 2–3

[31] Patent Owner does not address this evidence in reply to Petitioner's contention that this objection should be withdrawn. *See* Paper 100, 7–8; Paper 104. We do not address this exhibit further.

(referencing Trial Practice Guide August Update at 17). Patent Owner replies that, by filing Exhibits 1665–1669, Petitioner exceeded the word count for a Reply. Paper 104, 2–3.

We do not exclude Exhibits 1665–1669. Patent Owner provides no evidentiary basis why these exhibits constitute inadmissible evidence. To the extent that these exhibits do contain attorney argument, the proper remedy in such a situation is for us, when considering Petitioner's Reply arguments and evidence as a whole, to not consider any "arguments" found only in these exhibits and not adequately explained in the Reply. *See* Trial Practice Guide August Update 17–18; *cf.* Paper 69, 5 (addressing Petitioner's motion to strike).

b) Exhibit 1625

Patent Owner argues that Dr. Beaman's reply declaration mischaracterizes testimony from Patent Owner's declarant in support of its preliminary response (Dr. Durfee), based on characterizations of the testimony from Petitioner's counsel. Paper 97, 3–5. Patent Owner also argues that addressing Dr. Durfee's testimony, which was not relied on in the Patent Owner Response, is outside the scope of a proper reply. *Id.* at 4.[32]

Petitioner argues that Patent Owner does not provide a basis under the Federal Rules of Evidence to exclude Dr. Beaman's testimony. Paper 100, 6. Petitioner adds that a motion to exclude should not be directed to arguments or evidence that a party believes exceeds the proper scope of a reply. *Id.* Finally, Petitioner argues that the testimony sought to be

[32] Patent Owner also argues that "statements referencing Ex. 2001 in the Reply Brief (Papers 72, 73) mischaracterize Exhibit 2001 and/or exceed the proper scope of reply." Paper 97, 5. A motion to exclude *evidence* is not the proper vehicle to assert that a brief improperly exceeds its scope.

excluded identifies inconsistencies between Patent Owner's declarants' testimony. *Id.* at 6–7.

In reply, Patent Owner argues that Dr. Beaman's testimony lacks foundation. Paper 104, 3–4.

We do not exclude this evidence. Patent Owner did not rely on a lack of foundation in its objection to Dr. Beaman's testimony or in the original motion to exclude. *See* Paper 76, 5 ("Team Worldwide objects to the Reply Declaration of Joseph J. Beaman, Jr. (Exhibit 1625), which mischaracterizes Exhibit 2201 and/or exceeds the proper scope of reply."); Paper 97, 3–5 (contending that portions of Exhibit 1625 "mischaracterize[] Patent Owner's early expert testimonial evidence (Exhibit 2001) and/or exceeds the proper scope of reply"). Accordingly, Patent Owner does not identify an evidentiary basis to exclude the evidence. Also, neither the motion nor the objection identifies, with particularity, those portions of Dr. Beaman's declarations to be excluded, as Patent Owner's citations were presented as exemplary only. *See* Paper 76, 5; Paper 97, 3–5.

c) Exhibits 1651–1654 and 1679

Patent Owner argues that Exhibits 1651–1654 should be excluded as hearsay, are irrelevant, and lack proper foundation. Paper 97, 6. Patent Owner also argues that Exhibit 1679 does not lay the proper foundation for these exhibits. *Id.* at 8–9.

We deny Patent Owner's motion as to these exhibits as moot, as we do not rely on them in this Decision. *See* Trial Practice Guide August Update 17 ("In the Board's experience, consideration of the objected-to evidence is often unnecessary to resolve the patentability of the challenged claims, and the motion to exclude is moot.").

III. CONCLUSION

After considering the complete record, we find that Petitioner fails to demonstrate, by a preponderance of the evidence, that any of the Challenged Claims are unpatentable. Also, we deny Petitioner's and Patent Owner's motions to exclude evidence.

IV. ORDER

In consideration of the foregoing, it is hereby:

ORDERED that, claims 1, 7, and 11–14 *are not shown to be unpatentable* under 35 U.S.C. § 102(b) as anticipated by Chaffee;

FURTHER ORDERED that claim 5 *is not shown to be unpatentable* under 35 U.S.C. § 103 over Chaffee and Walker;

FURTHER ORDERED that claims 1, 7, and 12–14 *are not shown to be unpatentable* under 35 U.S.C. § 102(b) as anticipated by Chan;

FURTHER ORDERED that claims 5 and 11 *are not shown to be unpatentable* under 35 U.S.C. § 103 over Chan and Walker;

FURTHER ORDERED that claims 1, 7, and 11–14 *are not shown to be unpatentable* under 35 U.S.C. § 103 over Parienti and Goldsmith;

FURTHER ORDERED that claim 5 *is not shown to be unpatentable* under 35 U.S.C. § 103 over Parienti, Goldsmith, and Walker;

FURTHER ORDERED that claims 1, 7, and 11–14 *are not shown to be unpatentable* under 35 U.S.C. § 103 over Chaffee;

FURTHER ORDERED that Petitioner's and Patent Owner's and motions to exclude evidence are *denied*; and

FURTHER ORDERED that because this is a Final Written Decision, parties to the proceeding seeking judicial review of the decision must comply with the notice and service requirements of 37 C.F.R. § 90.2.

In summary:

Claims	35 U.S.C. §	Basis	Claims Shown Unpatentable	Claims Not shown Unpatentable
1, 7, 11–14	102(e)	Chaffee		1, 7, and 11–14
5	103	Chaffee and Walker		5
1, 7, 12–14	102(b)	Chan		1, 7, and 12–14
5, 11	103	Chan and Walker		5 and 11
1, 7, 11–14	103	Parienti and Goldsmith		1, 7, and 11–14
5	103	Parienti, Goldsmith, and Walker		5
1, 7, 11–14	103	Chaffee		1, 7, and 11–14
Overall Outcome				1, 5, 7, and 11–14

FOR PETITIONER:

R. Trevor Carter
Andrew M. McCoy
FAEGRE BAKER DANIELS LLP
Trevor.Carter@faegrebd.com
Andrew.McCoy.PTAB@faegrebd.com

John S. Artz
Steven A. Caloiaro (*pro hac vice*)
DICKINSON WRIGHT PLLC
jsartz@dickinsonwright.com
scaloiaro@dickinsonwright.com

David M. Tennant
Allen Wang
WHITE & CASE LLP
dtennant@whitecase.com
allen.wang@whitecase.com

FOR PATENT OWNER:

Timothy E. Bianchi
Thomas C. Reynolds
Domenico Ippolito
SCHWEGMAN, LUNDBERG & WOESSNER, P.A.
tbianchi@slwip.com
treynolds@slwip.com
dippolito@slwip.com
SLW-PTAB@slwip.com

Ronald Wielkopolski
Amadou K. Diaw
Robert M. Harkins
RUYAKCHERIAN LLP
ronw@ruyakcherian.com
amadoukd@ruyakcherian.com
bobh@ruyakcherian.com
TWW_Intex_IPRs@ruyakcherian.com