Trials@uspto.gov
571-272-7822

Paper No. 129
Entered: September 11, 2019

UNITED STATES PATENT AND TRADEMARK OFFICE

BEFORE THE PATENT TRIAL AND APPEAL BOARD

INTEX RECREATION CORPORATION and BESTWAY (USA) INC.,
Petitioners,

v.

TEAM WORLDWIDE CORPORATION,
Patent Owner.

Case IPR2018-00875
Patent 7,346,950 B2

Before BEVERLY M. BUNTING, JAMES J. MAYBERRY, and
ERIC C. JESCHKE, *Administrative Patent Judges*.

MAYBERRY, *Administrative Patent Judge*.

JUDGMENT
Final Written Decision
Determining All Challenged Claims Unpatentable
35 U.S.C. § 318(a)

ORDER
Denying Petitioners' Motion to Exclude
Denying Patent Owner's Motion to Exclude
37 C.F.R. § 42.64

I. INTRODUCTION

Petitioners, Intex Recreation Corp., Bestway (USA) Inc., Walmart Inc., Wal-Mart Stores Texas, LLC, Wal-Mart.com USA LLC, and Sam's West, Inc. d/b/a Sam's Club (collectively, "Petitioners"), filed a Petition ("Pet.") requesting *inter partes* review of claims 1, 7, and 11–14 (the "Challenged Claims") of U.S. Patent No. 7,346,950 B2 (Ex. 1001, the "'950 patent"). Paper 1.[1] Patent Owner, Team Worldwide Corp., filed a Preliminary Response ("Prelim. Resp.") to the Petition. Paper 8. We instituted trial on all claims and grounds. Paper 14 ("Dec. on Inst.").

After we instituted trial, Patent Owner filed a Patent Owner Response. Paper 50 ("PO Resp.").[2] Petitioners filed a Reply to the Patent Owner Response. Paper 75 ("Reply").[3] Patent Owner filed a Sur-Reply to the Reply. Paper 87 ("Sur-Reply").[4]

Both Petitioners and Patent Owner filed motions to exclude evidence. Papers 92, 94. Both parties filed oppositions and replies to the respective motions. Papers 97, 98, 100, 101.

---

[1] The Petition indicates that, along with Petitioners, the following entities are real parties-in-interest: Intex Development Company Ltd., Intex Industries (Xiamen) Co., Ltd., Intex Marketing Ltd., Intex Trading Ltd., Bestway Global Holdings, Inc., Bestway (Hong Kong) International, Ltd., Bestway Inflatables & Materials Corp., Bestway (Hong Kong) Enterprise Co. Ltd., Bestway (Nantong) Recreation Corp., The Coleman Company, Inc., and Newell Brands Inc. Pet. 1.
[2] A public version of the Patent Owner Response was filed as Paper 49.
[3] A public version of the Reply was filed as Paper 76.
[4] A public version of the Sur-Reply was filed as Paper 86.

An oral hearing was conducted on June 7, 2019, for this proceeding and the record includes a transcript of the hearing. Paper 122 ("Tr.").[5] A consolidated oral hearing for *inter partes* review proceedings IPR2018-00870, IPR2018-00871, and IPR2018-00872, which concern a related patent, was also conducted on June 7, 2019, and the record contains a transcript of that hearing. Paper 119.[6]

On June 18, 2019, we granted a joint motion to terminate the proceeding as to the Walmart entities (Walmart Inc., Wal-Mart Stores Texas, LLC, Wal-Mart.com USA LLC, and Sam's West, Inc. d/b/a Sam's Club). Paper 116. Accordingly, Intex Recreation Corp. and Bestway (USA) Inc. are the sole remaining Petitioners.

Petitioners rely on the declaration testimony of Dr. Joseph Beaman (Exs. 1002, 1625), Mr. W. Todd Schoettelkotte (Ex. 1649), and Mr. Ryan Slate (Ex. 1650). Patent Owner relies on the declaration testimony of Dr. Glen Stevick (Ex. 2029) and Dr. Becker (Ex. 2638).

The Board has jurisdiction under 35 U.S.C. § 6. This Final Written Decision is issued pursuant to 35 U.S.C. § 318(a) and 37 C.F.R. § 42.73. For the reasons that follow, we conclude that the information in the Petition demonstrates, by a preponderance of the evidence, that the Challenged Claims are unpatentable.

---

[5] A public version of the transcript was filed as Paper 121.
[6] A public version of this transcript was filed as Paper 118.

A. Related Matters

The parties indicated that the ’950 patent was the subject of an infringement suit in the U.S. District Court for the Eastern District of Texas, in a case styled *Team Worldwide Corp. v. Walmart, Inc., et al.*, No. 2-17-cv-00235-JRG (the “Litigation”). *See* Pet. 1–2; Paper 6, 1. The Litigation was dismissed because of settlement. *See* Paper 107, 1.

Petitioners also point to the filed petitions for *inter partes* review of U.S. Patent Nos. 9,211,018 (the “’018 patent”) and 7,246,394 (the “’394 patent”). *See* Pet. 2; Paper 6, 1–2 (identifying IPR2018-00870, IPR2018-00871, IPR2018-00872, IPR2018-00873, and IPR2018-00874 as challenging the ’394 patent, and IPR2018-00859 as challenging the ’018 patent).

Patent Owner indicates that additional lawsuits involving the ’950, ’018, and ’394 patents have been filed: *Team Worldwide Corp. v. Macy’s, Inc. & Macys.com, LLC*, No. 2:19-cv-00099-JRG (E.D. Tex.); *Team Worldwide Corp. v. Target Corporation & Target Brands, Inc.*, No. 2:19-cv-00100-JRG (E.D. Tex.); *Team Worldwide Corp. v. The Home Depot, Inc.*, No. 2:19-cv00098-JRG (E.D. Tex.); *Team Worldwide Corp. v. Dick’s Sporting Goods, Inc.*, No. 2:10-cv-00097-JRG (E.D. Tex.); *Team Worldwide Corp. v. Costco Wholesale Corp.*, No. 2:19-cv-00096-JRG (E.D. Tex.); *Team Worldwide Corp. v. Bed Bath & Beyond Inc.*, No. 2:19- cv-00095-JRG (E.D. Tex.); *Team Worldwide Corp. v. Amazon.com, Inc. and Amazon.com LLC*, No. 2:19-cv-00094-JRG (E.D. Tex.); *Team Worldwide Corp. v. Ace Hardware Corp.*, No. 2:19-cv-00093-JRG (E.D. Tex.); and *Team Worldwide Corp. v. Academy, Ltd. d/b/a Academy Sports + Outdoors*, No. 2:19-cv-

00092-JRG (E.D. Tex.). Paper 107, 2–3. Patent Owner indicates that these lawsuits have been stayed pending the results of this and related *inter partes* review proceedings. *Id.* at 3.

Patent Owner also identifies "a claim filed in *In re Sears Holding Corp.*, *et al.* chapter 11 bankruptcy cases pending before the United States Bankruptcy Court for the Southern District of New York, Case No. 18-23538 (RDD) (Jointly Administered) in which Patent Owner asserts infringement of" the '950, '018, and '394 patents. Paper 107, 3.

B. The '950 Patent

The '950 patent "relates in general to an inflatable product provided with an electric air pump." Ex. 1001, 1:13–14. According to the '950 patent, prior air mattresses included inflatable chambers that "are inflated by an electric air pump . . . , which is separately provided, requiring users to carry two items, the air mattress itself, and an electric air pump" such that "[i]nconvenience results, especially for outdoor use." *Id.* at 1:16–23. The '950 patent, in contrast, "provides a modified air mattress, which has a built-in electric air pump eliminating the need for an external pump." *Id.* at 1:24–26.

During prosecution of the application that matured into the '950 patent, in response to a restriction requirement, the applicant elected the species shown in Figures 4A–H. *See* Ex. 1003, 155. Figure 4A is reproduced below:

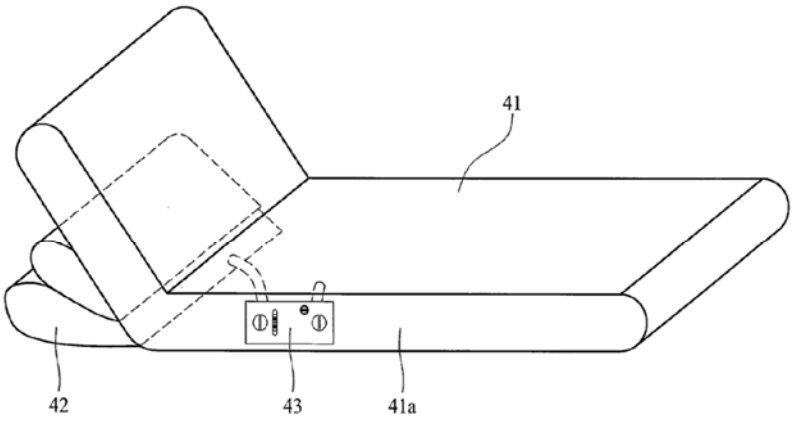

FIG. 4A

Figure 4A depicts "a perspective diagram of an inflatable product," which includes mattress pad 41 with chamber wall 41a and air pump assembly 43. *Id.* at 2:35–36, 5:1–6. Air pump assembly 43 is "built into" mattress pad 41 to inflate mattress pad 41 and back support 42. *Id.* at 5:1–6. The '950 patent provides no additional disclosure, including detailed drawings, regarding how air pump assembly 43 is built into mattress pad 41.

Figures 4B, 4C, and 4F are reproduced below:

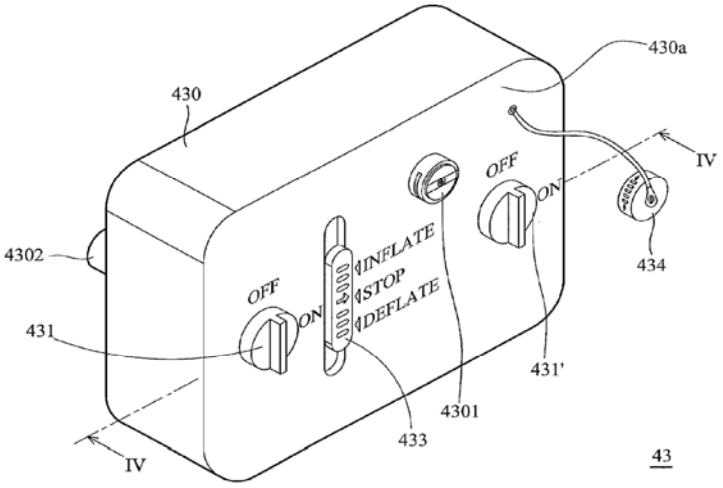

FIG. 4B

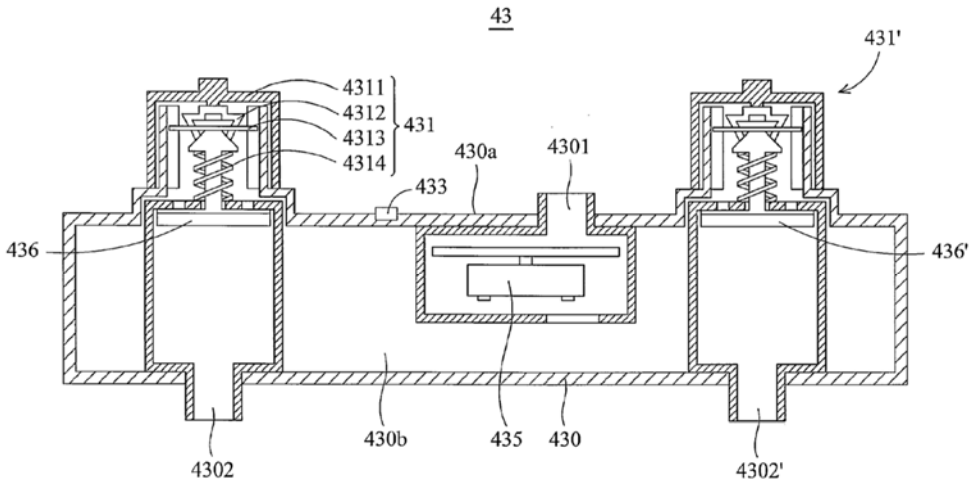

FIG. 4C

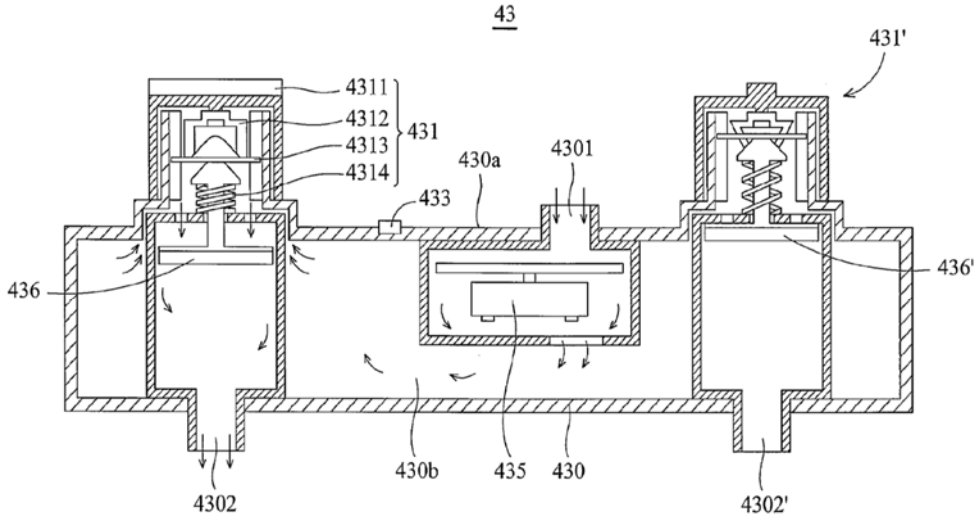

FIG. 4F

Figure 4B depicts pack 430 of air pump assembly 43 and Figure 4C provides a sectional view of pack 430. Ex. 1001, 2:39, 5:7–8. Figure 4F depicts the air flow through pack 430 and out first air outlet 4302, with the arrows indicating the airflow path. *Id.* at 5:32–37.

Pack 430 includes pack wall 430a positioned away from chamber wall 41a and interior region 430b, which contains fan and motor 435.

Ex. 1001, 5:8–10. Motor switch 433 is mounted on pack 430 and activates fan and motor 435, as are valve switches 431, 431', which open and close valves 436, 436'. *Id.* at 5:11–14. Pack 430 includes air intake 4301 and two air outlets 4302, 4302'. *Id.* at 5:14–17. Upon actuating motor switch 433 and valve switches 431, 431', air is pumped from the outside into mattress pad 41 and back support 42 to inflate these structures or air is pumped from the mattress pad 41 and back support 42 to the outside to deflate these structures. *See id.* at 5:27–37, Fig. 4B (showing the "inflate" and "deflate" switch positions); *see also id.* at 5:20–26, Fig. 4D (describing and illustrating the operation of valves 436, 436').

C. Challenged Claims

Of the Challenged Claims, claim 1 is the only independent claim. Ex. 1001, 8:55–10:27. Claim 1 is reproduced below.

> 1. An inflatable product, including:
>
> a first chamber comprising a chamber wall;
>
> a pack having an interior region, an air intake communicating the interior region to the outside of the first chamber and a first air outlet communicating the interior region to the inside of the first chamber, wherein the pack is built in the chamber wall and extends into an interior of the first chamber;
>
> a first valve for opening and closing the first air outlet, wherein the first valve is connected to the pack; and
>
> a fan and motor disposed in the interior region of the pack, wherein, on activation of the fan and motor to inflate the first chamber, air is pumped from outside of the first chamber through the air intake into the interior region of the pack, then through the first valve and first air outlet into the first chamber.

Ex. 1001, 8:55–9:3.

D. The Prior Art

We instituted trial on grounds that rely on the following references:

Parienti	US 6,018,960	Feb. 1, 2000	Ex. 1005
Chaffee	US 7,039,972 B2	May 9, 2006	Ex. 1006
Goldsmith	US 2,493,067	Jan. 3, 1950	Ex. 1007

E. Asserted Grounds of Unpatentability

We instituted trial on the following grounds: (1) all Challenged Claims are anticipated under 35 U.S.C. § 102 by Parienti; (2) all Challenged Claims are anticipated under 35 U.S.C. § 102 by Chaffee; (3) all Challenged Claims are unpatentable under 35 U.S.C. § 103 over Chaffee; (4) claim 14 is unpatentable under 35 U.S.C. § 103 over Chaffee and Parienti; and (5) all Challenged Claims are unpatentable under 35 U.S.C. § 103 over Parienti and Chaffee or Goldsmith. Dec. on Inst. 62; Pet. 17–18.

F. Overview of the Prior Art

The Petition relies on three prior art references—Parienti, Chaffee, and Goldsmith—which we discuss, below.

1. Parienti

Parienti, titled "Automatically Inflatable, Deflatable and Foldable Solar-Powered Cooler Mattress with a Sunshade," issued February 1, 2000. Ex. 1005, (54), (45). Parienti discloses that the "invention is made up of an inflatable mattress and an associated device for automatic inflating and deflating of the mattress" and that "[t]h[e associated] device is made interdependent with the mattress by means of gluing or any other means." *Id.* at 1:22–25. Figure 1 of Parienti is reproduced below:

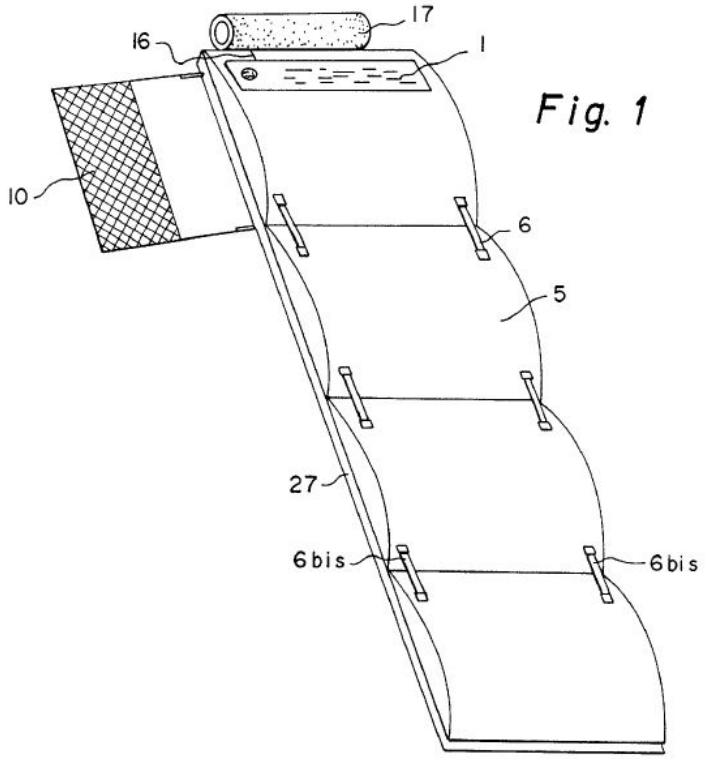

Figure 1 depicts "a plan view of the solar powered mattress of the . . . invention." *Id.* at 1:36–37. The embodiment in Figure 1 shows, among other aspects, mattress 5, photovoltaic cells 1, and pipe 16 that may direct airflow to porous cylinder 17 for cooling a user. *See, e.g.*, *id.* at 3:20–29.

Figures 4 and 5 are reproduced below:

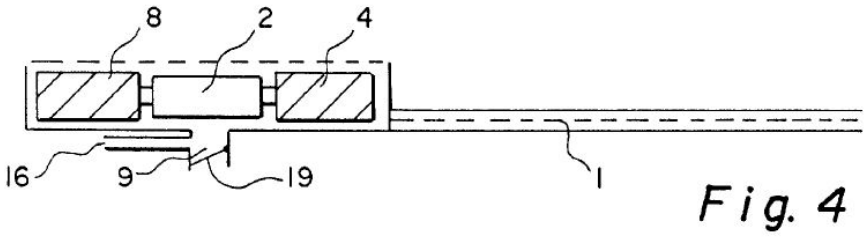

Fig. 4

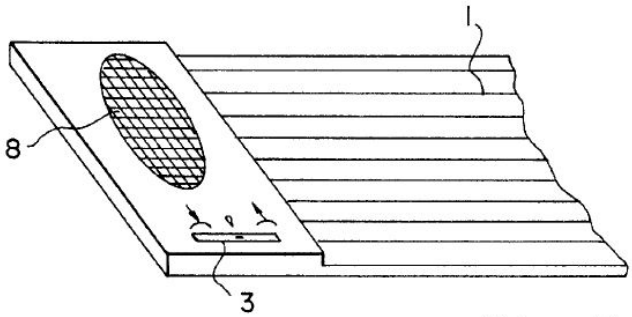

Fig. 5

Figure 5 depicts "a plan view of a device for inflation/deflation of the solar powered mattress," and Figure 4 depicts a cross-sectional view of the device of Figure 5. *Id.* at 1:44–46. Parienti discloses:

> Switching from inflating to deflating function is performed by reversing the polarity of the motor (2) that drives the turbine (4). Inflating is performed through the rotation of the turbine in one direction, what causes the suction of ambient air through the protective grid (8) and the introduction of the air into the mattress through the pipe (9). Likewise, deflating is performed through the rotation of the turbine in the reverse direction, what causes the suction of the air from the mattress and its exhausting to the exterior (FIG. 4).

Id. at 2:64–3:6.[7] As seen in Figure 4, pipe 9 is positioned relative to mattress 5 for inflating and deflating the mattress.

2. Chaffee

Chaffee, titled "Inflatable Device with Recessed Fluid Controller and Modified Adjustment Device," issued May 9, 2006. Ex. 1006, (54), (45). The application that matured into Chaffee was filed May 17, 2001, and claims priority to provisional applications filed March 30, 2001, and May 17, 2000. *Id.* at (22), (60). Chaffee relates to "inflatable devices, and, more specifically, to an inflatable device with a recessed fluid controller." *Id.* at 1:13–15. Figure 2 of Chaffee is reproduced below:

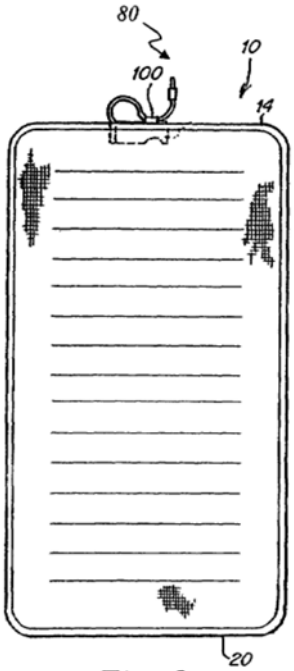

Fig. 2

[7] The lead line for protective grid 8 in Parienti's Figure 4 mistakenly extends to a portion of turbine 4 rather than to protective grid 8, represented as the horizontal dashed line *above* turbine 4 and motor 2. *Compare* Ex. 1005, Fig. 4, *with id.*, Fig. 5.

Figure 2 depicts inflatable device 10, which includes, among other aspects, "substantially fluid impermeable bladder 20 and a fluid controller 80 comprising an electrically powered pump at least partially positioned within bladder 20." *Id.* at 3:3–7. Chaffee discloses that fluid controller 80 "control[s] the flow of fluid into and/or out of bladder 20." *Id.* at 3:59–61. Figures 3 and 5 are reproduced below:

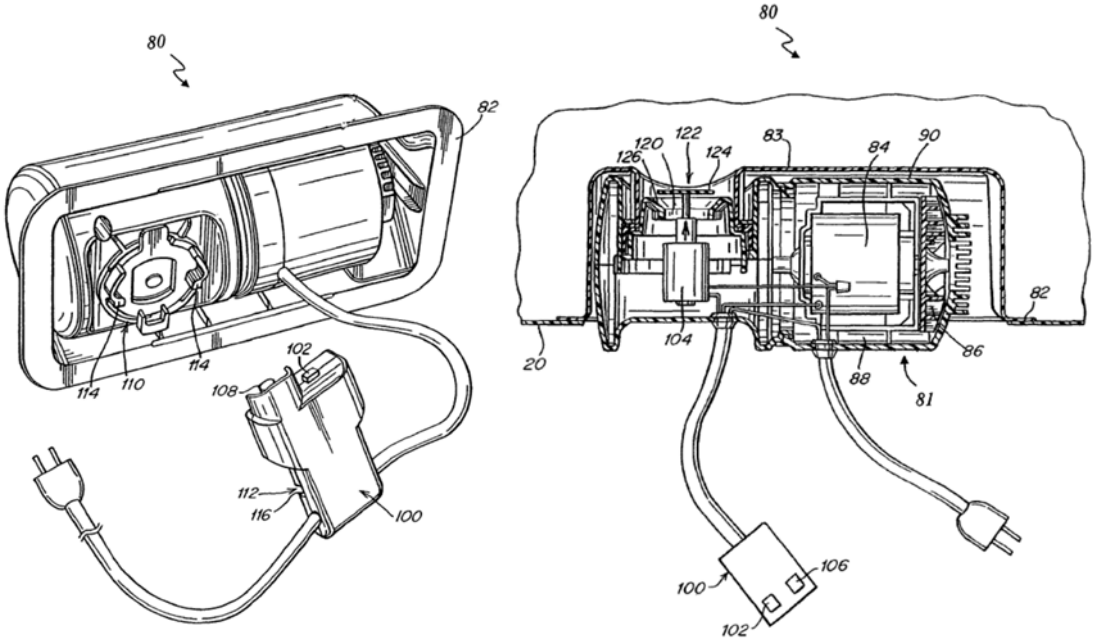

Fig. 3 Fig. 5

Figures 3 and 5 depict a perspective view and cross-sectional view, respectively, of one embodiment of fluid controller 80. *See id.* at 2:34–35, 2:38–39. These figures depict, among other aspects, pump 81, flange 82, wall 83, and housing 90. *See id.* at 4:11–17, 5:4–13.

3. Goldsmith

Goldsmith, titled "Mattress," issued January 3, 1950. Ex. 1007, 1. Goldsmith "relates to improvements in mattresses and has particular

reference to the type known as 'inner spring mattresses.'" *Id.* at 1:1–3. Goldsmith discloses providing an inner spring mattress with means "for blowing air of varying temperatures into the inner compartment of the mattress, and permitting such air to circulate through the said inner compartment, and to heat or cool the mattress to a temperature above or below the normal outside or surrounding temperature." *Id.* at 1:4–12. Figure 1 of Goldsmith is reproduced below:

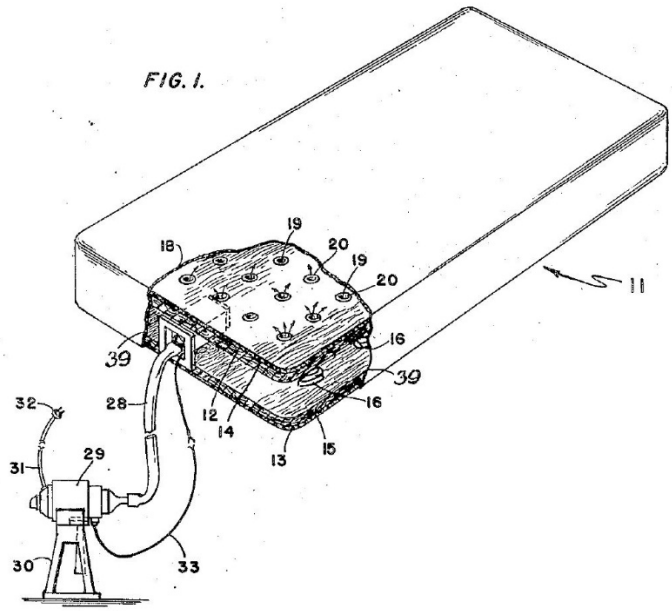

Figure 1 depicts "a perspective view, partly broken away, of a mattress and shows an air blowing mechanism attached thereto." *Id.* at 2:19–21. As shown in Figure 1, Goldsmith discloses one embodiment in which blower unit 29 provides air to one end of inner spring mattress 11 via tube 28. *See id.* at 2:51–3:1. Goldsmith discloses that wall 39 "encircles the mattress and acts to prevent the air within the aforesaid air compartment 17 from escaping." *Id.* at 3:25–28.

Figure 6 of Goldsmith is reproduced below:

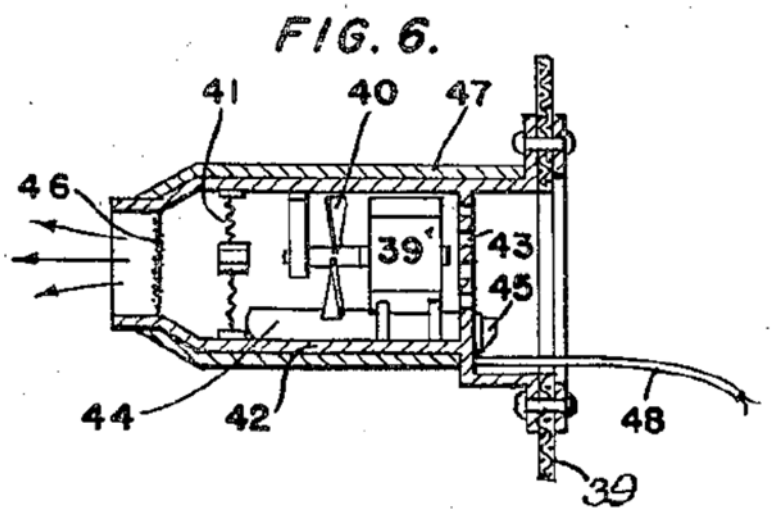

Figure 6 depicts a "sectional view showing a modified form of air distributing chamber which forms a part of th[e] invention." *Id.* at 2:30–32. The alternative embodiment shown in Figure 6 includes, among other aspects, motor 39' and fan 40 inside distribution casing 42, which is "mounted or attached to the mattress" previously described. *Id.* at 4:1–5. Goldsmith states: "With this form set [shown in Figure 6] within the mattress, no outside [blower] unit is necessary." *Id.* at 4:11–12.

II. ANALYSIS

A. Level of Ordinary Skill in the Art

The level of skill in the art is "a prism or lens" through which we view the prior art and the claimed invention. *Okajima v. Bourdeau*, 261 F.3d 1350, 1355 (Fed. Cir. 2001). Petitioners contend that a person having ordinary skill in the art would have had "a bachelor's degree in mechanical engineering, or an equivalent field" or, alternatively, "an associate's degree in mechanical engineering, or an equivalent field, and two years of practical

experience in product design and manufacturing." Pet. 9 (citing Ex. 1002 (Decl. of Dr. Beaman) ¶¶ 26–28).

Patent Owner disagrees with Petitioners' formulation of the level of ordinary skill in the art in one respect. PO Resp. 17–18. Patent Owner contends that a person having ordinary skill in the art would have had "a bachelor's degree in mechanical engineering or an equivalent field" or, alternatively, been "a designer with at least two years of experience in mechanical and electrical design aspects of inflatable products having electric air pumps." *Id.* at 18 (citing Ex. 2029 (Decl. of Dr. Stevick) ¶¶ 30–36). That is, Patent Owner contends that, equivalent to having a bachelor's degree in mechanical (or similar) engineering, is having specific experience in the mechanical and electrical aspects of inflatable products with electric pumps.

We find both parties assert very similar definitions of the level of ordinary skill in the art. Both definitions include, as one alternative, a degreed mechanical engineer or the like. We agree with Patent Owner that an individual[8] without a bachelor's degree in mechanical engineering would be a person of ordinary skill in the art so long as they had experience with inflatable products with electric motors, and we adopt Patent Owner's formulation of the level of ordinary skill in the art. *See* PO Resp. 18.

---

[8] Patent Owner uses the term "designer" in defining the level of skill in the art for an individual without a bachelor's degree in mechanical engineering. We do not discern any special meaning for that term based on Patent Owner's assertions, other than a person with the indicated experience. *See* PO Resp. 17–18; Ex. 2029 ¶¶ 30–36.

We base our determination on a review of the prior art of record concerning inflatable products, small pumps for inflating or deflating products, and valves for small pumps. *See, e.g.*, Exs. 1011–1039 (providing certain prior art); *see also* Ex. 1002 ¶¶ 49–71 (discussing the state of the art for inflatable products and pumps). As such, based on the complete record, we find that a person of ordinary skill in the art would have had "a bachelor's degree in mechanical engineering or an equivalent field" or, alternatively, "a designer with at least two years of experience in mechanical and electrical design aspects of inflatable products having electric air pumps."

Further, we note that our patentability and claim construction analyses presented below would reach the same findings and determinations under either party's definition of the level of ordinary skill in the art. *Cf.* Ex. 2029 ¶ 35 ("My opinions expressed in this declaration remain the same under either definition of a [person having ordinary skill in the art]."); Ex. 1625 ¶ 11 ("Despite my initial opinion, I agree with the Board's . . . definition of a [person having ordinary skill in the art].").

B. Claim Construction

In an *inter partes* review, claim terms in an unexpired patent are given their broadest reasonable construction in light of the specification of the patent in which they appear. 37 C.F.R. § 42.100(b) (2017). Under the broadest reasonable construction standard, claim terms are given their ordinary and customary meaning, as would be understood by one of ordinary skill in the art in the context of the entire disclosure. *In re Translogic Tech., Inc.*, 504 F.3d 1249, 1257 (Fed. Cir. 2007). Also, we are careful not to read

a particular embodiment appearing in the written description into the claim if the claim language is broader than the embodiment. *See In re Van Geuns*, 988 F.2d 1181, 1184 (Fed. Cir. 1993) ("[L]imitations are not to be read into the claims from the specification.").

The claim construction standard to be employed in an *inter partes* review recently changed to the standard set forth in *Phillips v. AWH Corp.,* 415 F.3d 1303, 1316 (Fed. Cir. 2005). *See* Changes to the Claim Construction Standard for Interpreting Claims in Trial Proceedings Before the Patent Trial and Appeal Board, 83 Fed. Reg. 51,340 (Oct. 11, 2018) (now codified at 37 C.F.R. § 42). That new standard, however, applies only to proceedings in which the petition was filed on or after November 13, 2018. The Petition in this proceeding was filed on March 30, 2018, and we apply the broadest reasonable interpretation claim construction standard that was in effect at that time.[9] We invited the parties to address the impact, if any, of the then-proposed (now implemented) change to the claim construction standard upon the present proceeding. *See* Dec. on Inst. 26 n.6. Neither Patent Owner nor Petitioners indicate that any claim term would

[9] Patent Owner recognizes that the change in claim construction standard does not apply to this proceeding, but submits that Phillips has been recognized as the correct standard and should be applied in this case. PO Resp. 12 n.2. Patent Owner does not identify any authority, either in the case law or Board decisions, that would allow us to apply the *Phillips* standard to this case, nor does Patent Owner explain why the standard in *Phillips* is "the correct standard," and, by implication, why the broadest reasonable interpretation is the incorrect standard. *See id.* In accordance with our rules, we apply the appropriate claim construction standard dictated for the current proceeding, the broadest reasonable interpretation.

have a different construction under the *Phillips* standard as compared to the broadest reasonable construction standard.

We note that, in two situations, the proper interpretation of a claim term departs from the ordinary and customary meaning, as would be understood by one of ordinary skill in the art in the context of the entire disclosure—when the patentee acts as its own lexicographer or disavows certain claim scope. *See Luminara Worldwide, LLC v. Liown Elecs. Co.*, 814 F.3d 1343, 1353 (Fed. Cir. 2016). "The standards for finding lexicography and disavowal are '*exacting*.'" *Id.* (emphasis added). "To act as a lexicographer, a patentee must 'clearly set forth a definition of the disputed claim term' and 'clearly express an intent to redefine the term.'" *Id.* Disavowal (or disclaimer) requires that the patentee make it clear, either in the Specification or in the prosecution history, "that the invention does not include a particular feature." *Id.* "While such disavowal can occur either explicitly or implicitly, *it must be clear and unmistakable*." *Id.* (emphasis added).

Petitioners provide express constructions for two terms: "pack" and "fan." Pet. 18–25. Patent Owner provides an express construction for an additional term: "built in." PO Resp. 13–17. We address "built in" and "pack," below. As will be evident from our analysis below, we need not explicitly construe the term "fan," as it is not in dispute, nor do we need to construe any other term. *See Nidec Motor Corp. v. Zhongshan Broad Ocean Motor Co. Ltd.,* 868 F.3d 1013, 1017 (Fed. Cir. 2017), *cert. denied*, 138 S. Ct. 1695 (April 30, 2018) (citing *Vivid Techs., Inc. v. Am. Sci. & Eng'g, Inc.*, 200 F.3d 795, 803 (Fed. Cir. 1999)) (indicating that "we need only

[expressly] construe terms 'that are in controversy, and only to the extent necessary to resolve the controversy'").

1. "built in"

In our Decision on Institution, we construed the term "built in" to mean "integrated into and not detachable (or readily removed) from." Dec. on Inst. 23–26. Patent Owner remarks our construction is correct. PO Resp. 15. Petitioners do not offer a different construction in their Reply. *See* Reply; *see, e.g.*, *id.* at 7–9 (addressing why Parienti's alleged pack is built in the wall of mattress 5, and applying our construction of "built in"). Based on our review of the complete record, we do not see a reason to modify our construction.

The parties do dispute how our construction is applied to the prior art in this proceeding and we address this dispute in our analysis, below.

Thus, based on the complete record, we adopt the reasons set forth in the Decision on Institution for purposes of this Final Written Decision in construing "built in" to mean "integrated into and not detachable (or readily removed) from." Dec. on Inst. 23–26.

2. "pack"

In our Decision on Institution, we preliminarily construed the term "pack," consistent with the District Court in the Litigation, to mean "container." Dec. on Inst. 26–29. Patent Owner contends that the term "'pack' is a container, and the container includes the elements recited in the

claims as being part of the 'pack.'" PO Resp. 13–15. Petitioners reply that they agree with Patent Owner's contention. Reply 1.

In light of this agreement, we see no need to modify our construction of the term "pack," which we maintain means "container." Any comparison of a prior art disclosure with a limitation of the Challenged Claims reciting a "pack" will naturally include the specific elements recited in the limitation that are associated with the pack.

Thus, based on the complete record, we adopt the reasons set forth in the Decision on Institution for purposes of this Final Written Decision in construing "pack" to mean "container." Dec. on Inst. 26–29.

C. Asserted Grounds of Unpatentability based on Anticipation

In *inter partes* reviews, a petitioner bears the burden of proving unpatentability of the challenged claims, and the burden of persuasion never shifts to the patent owner. *Dynamic Drinkware, LLC v. Nat'l Graphics, Inc.*, 800 F.3d 1375, 1378 (Fed. Cir. 2015). To prevail in this proceeding, Petitioners must support their challenge by a preponderance of the evidence. 35 U.S.C. § 316(e); 37 C.F.R. § 42.1(d). Accordingly, all of our findings and conclusions are based on a preponderance of the evidence.

Petitioners assert two grounds of unpatentability based on anticipation. Pet. 18. A "prior art reference—in order to anticipate under 35 U.S.C. § 102—must not only disclose all elements of the claim within the four corners of the document, but must also disclose those elements 'arranged as in the claim.'" *Net MoneyIN, Inc. v. VeriSign, Inc.*, 545 F.3d 1359, 1369 (Fed. Cir. 2008) (quoting *Connell v. Sears, Roebuck & Co.*, 722

F.2d 1542, 1548 (Fed. Cir. 1983)). "Anticipation is an issue of fact." *In re Schreiber*, 128 F.3d 1473, 1477 (Fed. Cir. 1997).

1. The Challenged Claims are allegedly anticipated by Parienti

Petitioners contend that Parienti anticipates all of the Challenged Claims. Pet. 18. We address this contention below.

a. Independent claim 1.

i. Undisputed subject matter

We first analyze Petitioners' contentions with respect to those limitations of independent claim 1 that Patent Owner does not dispute. Claim 1 recites "[a]n inflatable product, including:[10] a first chamber comprising a chamber wall." Ex. 1001, 8:55–56. Petitioners contend that Parienti's mattress 5 includes the recited first chamber with a chamber wall. Pet. 36–37 (including an annotated version of Parienti's Figure 7 indicating the chamber with a chamber wall); *see also* Ex. 1002 ¶¶ 115–119 (providing Dr. Beaman's declaration as to the "first chamber" claim element of claim 1, including his annotation of Figure 7); Ex. 1005, Figs. 1, 4, and 7 (depicting a chamber in mattress 5 with a chamber wall).

We find, based on the complete record, that the information in the Petition demonstrates, by a preponderance of the evidence, that Parienti discloses the recited first chamber comprising a chamber wall—mattress 5.

---

[10] Petitioners contend that the preamble of claim 1 ("An inflatable product, including") is not limiting. Pet. 36 n.6. Patent Owner does not dispute this contention. Petitioners further contend that Parienti discloses an inflatable product, indicating that inflatable mattress 5 satisfies this subject matter. *Id.* For the purposes of this Decision, we do not consider the preamble of claim 1 limiting.

See, e.g., Pet. 36–37 (including analysis of this claim limitation), Ex. 1005, Figs. 1, 4, and 7.

Claim 1 also recites "a first valve for opening and closing the first air outlet, wherein the first valve is connected to the pack." Ex. 1001, 8:63–64. Petitioners identify valve 19 in pipe 9 as corresponding to the recited first valve. Pet. 45. Petitioners contend that Parienti discloses that valve 19 opens and closes pipe 9 and prevents air from escaping mattress 5 through pipe 9. *Id.* at 45–46. Petitioners also contend that Parienti discloses that "valve 19 is connected to pipe 9," which is part of the alleged "pack."[11] *Id.* at 46.

We find, based on the complete record, that the information in the Petition demonstrates, by a preponderance of the evidence, that Parienti discloses the recited first valve. *See, e.g.*, Pet. 45–46 (including analysis of this claim limitation); Ex. 1005, 2:66–3:2 (describing the operation of motor 2 and turbine 4 to inflate mattress 5 through pipe 9), 3:7–15 (describing the operation of valve 19), Figs. 4, 6 (illustrating valve 19), Fig. 5 (depicting switch 3, which works in association with boss 26 and rod 20 to open and close valve 19).

Claim 1 also recites "a fan and motor disposed in the interior region of the pack" and further requires "the fan and motor to inflate the first chamber, air is pumped from outside of the first chamber through the air intake into

[11] We address whether Petitioners adequately demonstrate that pipe 9 is part of Parienti's "pack," which Patent Owner does dispute, in a subsection below. Our analysis of this claim limitation focuses on the recited first valve and accepts without deciding here, that pipe 9 is part of the pack.

the interior region of the pack, then through the first valve and first air outlet into the first chamber" on activation of the fan and motor. Ex. 1001, 8:65–9:3. Petitioners contend that motor 2 and turbine 4 correspond to the recited fan and motor and that motor 2 and turbine 4 are disposed in Parienti's structure corresponding to the recited pack. Pet. 47 (including an annotated version of Parienti's Figure 4 showing motor 2 and turbine 4 occupying the interior region of Parienti's alleged "pack"); *see* Ex. 1002 ¶¶ 138–139.

Petitioners also contend that Parienti discloses that, when its fan and motor are activated, air is pumped from the outside, through an air intake into the interior region of the pack, then out the air outlet through the valve into the mattress. Pet. 48 (referencing Ex. 1002 ¶ 140). In support of this contention, Petitioners rely on the following disclosure in Parienti: "Inflating is performed through the rotation of the turbine in one direction, wh[ich] causes the suction of ambient air through the protective grid (8) and the introduction of the air into the mattress through the pipe (9)." Ex. 1005, 2:66–3:2. Petitioners explain that air flowing through pipe 9[12] (the alleged first air outlet) goes through valve 19. Pet. 49 (citing Ex. 1005, 3:7–9, Figs. 4, 5; Ex. 1002 ¶ 144).

We find, based on the complete record, that the information in the Petition demonstrates, by a preponderance of the evidence, that Parienti discloses a fan and motor that operate as recited. *See, e.g.*, Pet. 47–49

[12] Again, we address whether pipe 9 is actually a part of Parienti's pack in the following subsection. Our analysis of this claim limitation focuses on the functioning of motor 2 and turbine 4 and accepts without deciding here, that pipe 9 is part of the pack.

(providing analysis of this limitation); Ex. 1005, 2:64–3:2 (describing switching position switch 3 to cause motor 2 and turbine 4 to inflate mattress 5 through pipe 9), 3:7–15 (describing the operation of valve 19), Figs. 4–7 (illustrating the relationship between the fan and motor and other components).

ii. The recited pack and Parienti's pipe 9

Independent claim 1 recites, in relevant part, "a pack having an interior region, an air intake communicating the interior region to the outside of the first chamber and a first air outlet communicating the interior region to the inside of the first chamber." Ex. 1001, 8:57–60. Petitioners contend that Parienti discloses the recited pack. Pet. 37–41. We reproduce Petitioners' annotated version of Parienti's Figure 4, below.

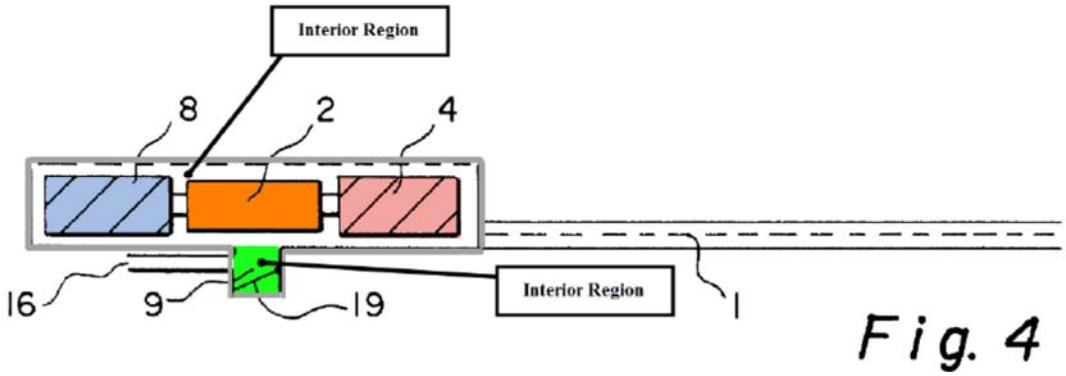

Id. at 39. This annotated figure provides colorized components within an outlined structure and identifies the interior region of the outlined structure. First, Petitioners contend that Parienti's alleged pack is encompassed by the grey outline in the annotated version of Figure 4 and that this structure includes an interior region. *Id.* at 38–39.

Next, Petitioners contend that Parienti discloses that the structure includes an air intake communicating the interior region of the pack with a region outside the first chamber. Pet. 39–40. Petitioners explain that Parienti discloses that turbine 4 pulls ambient air from outside mattress 5 through grid 8 (the alleged air intake). *Id.* at 39; *see also id.* at 40 (providing an annotated version of Parienti's Figure 5, showing air flow from the outside into the alleged pack through grid 8). Petitioners further contend that Parienti discloses that pipe 9 is an air outlet that communicates the interior region of the alleged pack to the inside of the first chamber. *Id.* at 40 (referencing Ex. 1005, 2:66–3:2). Petitioners explain that Parienti's turbine 4 pulls air into the interior region of the alleged pack and then into air mattress 5 through pipe 9. *Id.*

Patent Owner argues that pipe 9 is not a first air outlet communicating "the 'interior region' of the alleged 'pack'" to the inside of the first chamber. PO Resp. 29–31. To help convey its position, Patent Owner provides an annotated version of Parienti's Figure 4, which we reproduce below.

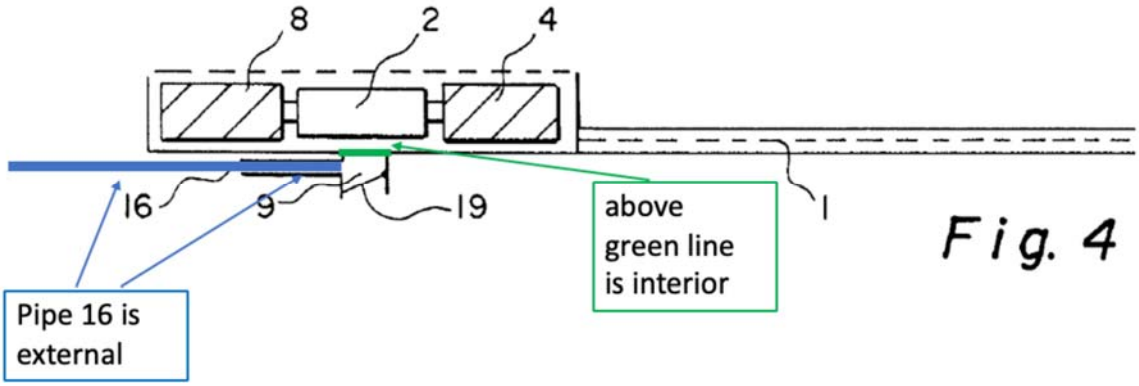

Id. at 30. The annotated figure shows a green line, above which includes the interior of Parienti's device, and a blue line, showing pipe 16. Patent Owner

explains that the interior region of the structure including the motor and turbine is above the green line (and the mattress). *Id.* at 31. Patent Owner concludes that "[c]onsequently, the 'housing structure' of Parienti is not 'built in' the chamber wall of the Parienti mattress." *Id.* (referencing Ex. 2029 ¶¶ 73–75).

We find that the information in the Petition demonstrates, by a preponderance of the evidence, that Parienti discloses a pack having an interior region, an air intake communicating the interior region to the outside of the first chamber and a first air outlet communicating the interior region to the inside of the first chamber, as required by claim 1.[13] *See* Pet. 37–40. At least Figures 1, 4, 5 and 7 depict a structure that contains motor 2 and turbine 4 in an interior region of that structure, which is used to inflate and deflate mattress 5. *See* Ex. 1005, 2:55–3:6, Figs. 1, 4, 5, 7. Parienti expressly discloses that mattress 5 is inflated by turbine 4 pulling ambient air through protective grid 8 (an air intake that communicates the interior region of the pack with outside air) and into the mattress. *Id.* at 2:66–3:2.

We now turn to the question of whether Parienti's alleged pack is built in the chamber wall and extends into an interior of the first chamber and whether pipe 9 constitutes the recited air outlet of the pack. These questions turn, in part, on whether the information in the Petition demonstrates, by a preponderance of the evidence, that Parienti's pipe 9 is part of Parienti's pack, which we address below.

[13] We analyze below if pipe 9 corresponds to the recited first air outlet.

Petitioners contend that Parienti's alleged pack is "built in the chamber wall and extends into an interior of the first chamber." Pet. 42–45. We reproduce Petitioners' annotated version of Parienti's Figure 7, below.

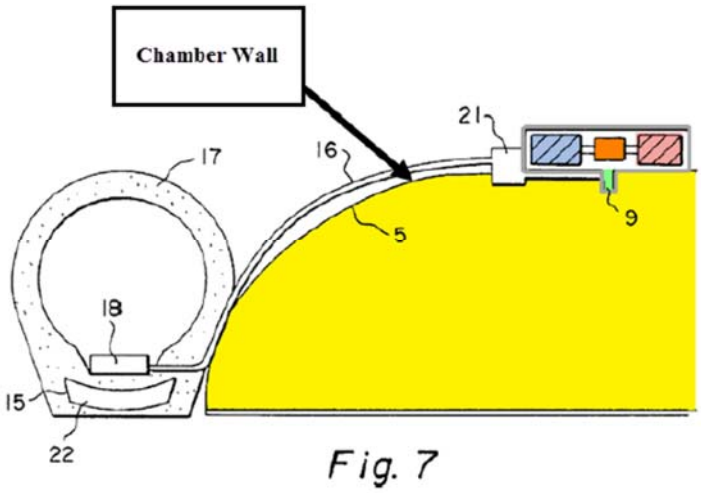

Id. at 43. This annotated figure shows the first chamber in yellow and the alleged pack outlined in grey, with pipe 9 in green. Petitioners contend that pipe 9 is part of the pack and extends into the first chamber (mattress 5), satisfying the recitation requiring the pack to extend into an interior of the first chamber. *Id.* at 44–45 (referencing Ex. 1002 ¶ 132; Ex. 1005, Fig. 7).

Dr. Beaman testifies that "Parienti's pack (gray) includes a pipe 9 (green) (a first air outlet)." Ex. 1002 ¶ 124 (referencing the colorized portions of Parienti's Figure 4, in the version reproduced above). He also testifies that "Parienti shows its pack (i.e., the gray housing having an interior region, an air intake (protective grid 8) and an air outlet (pipe 9)) as a one-piece unit that contains other parts, such as motor 2 and turbine 4." *Id.* ¶ 126 (referencing Ex. 1005, Figs. 1, 4, 5, 7). He also testifies that "Referring to Figure 7, below, pipe 9 (the air outlet) is part of Parienti's pack

(gray)." *Id.* ¶ 132 (referencing a colorized version of Parienti's Figure 7, which we reproduced above).

In weighing both parties' evidence and considering all of the arguments, we find that Petitioners have demonstrated, by a preponderance of the evidence, that Parienti discloses a pack and that the pack includes pipe 9. We address the parties' arguments, below.

Patent Owner, in addressing Petitioners' annotated version of Parienti's Figure 4, which we reproduced above, contends that Parienti does not use the terms housing, pack, or container with respect to its inflation and deflation device. PO Resp. 21. Patent Owner adds that Parienti does not describe the structure that Petitioners outline in gray as the alleged pack. *Id.* Also, Patent Owner argues that Parienti does not disclose that pipe 9 is part of its powering device. *Id.* at 21–22. Patent Owner adds that Parienti discusses pipe 9 as a separate component, similar to pipe 16. *Id.* at 22, 23–24 (referencing Ex. 1005, 3:51–59) (asserting that Parienti teaches away from having pipe 9 as part of the powering device because, in an embodiment, the device may be removed from the mattress); *see also id.* at 27 (referencing Ex. 1005, 3:54–59) ("Petitioners have not established that pipe 9 is a part of the 'housing structure'–on the contrary, Parienti discloses pipe 9 as separate from the powering device that includes motor and turbine.").

Patent Owner also argues that Parienti's Figure 4 does not depict how pipe 16 interfaces with Petitioners' alleged pack.[14] PO Resp. 22. Patent Owner also argues that Parienti's Figure 7 is incomplete because it does not show details of pinching system 21, how pipe 9 interfaces with the alleged pack, or how the alleged pack interfaces with mattress 5. *Id.* at 23. Patent Owner argues that a person having ordinary skill in the art would find that Parienti's Figures 4 and 7 convey general concepts as opposed to a definite design. *Id.* (referencing Ex. 2029 ¶ 62).

Dr. Stevick's testimony closely mirrors the Patent Owner Response (complete with case citation). *See* Ex. 2029 ¶¶ 59–62.

In reply, Petitioners explain that the parties agree that Figure 4B of the '950 patent discloses an exemplary pack. Reply 2. We reproduce Petitioners' colorized version of Figure 4B, below.

[14] Specifically, Patent Owner states that Figure 4 "shows no physical detail how pipe 16 meets the alleged 'housing structure' (gray outline of FIG. 4)." PO Resp. 22. Patent Owner adds, in a footnote, that it does not admit that Parienti discloses a "housing structure," but instead, Patent Owner is using the term to rebut Petitioners' argument. *Id.* at 22 n.5. We note that claim 1 does not recite a "housing" or "housing structure." It recites a "pack." *See* Ex. 1001, 8:55–9:3.

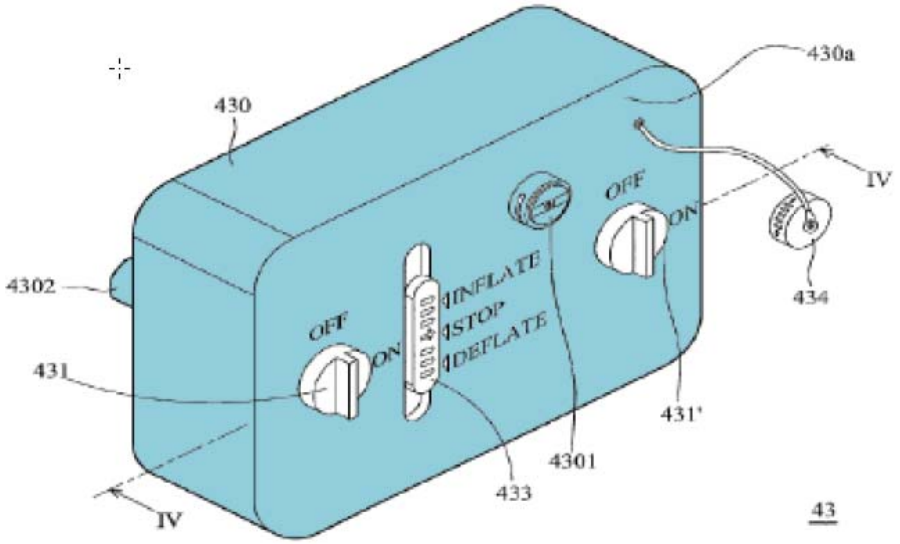

FIG. 4B

Reply 3. The colorized version of Figure 4B depicts the structure of pack 430 in blue, along with air intake 4301 and first air outlet 4302. *Cf.* Ex. 1001, 5:7–17, Fig. 4B. Petitioners explain that this exemplary pack includes an interior region (inside pack 430), an air intake (4301), and "a pipe-like air outlet" (4302). Reply 2 (referencing Ex. 1625 ¶ 20); *see also* Ex. 1602, 721:5–18 (providing Dr. Stevick's testimony about pack 430).

Petitioners argue that Parienti discloses the recited pack. Reply 3. Petitioners argue that Parienti's Figures 4 and 5 "clearly show a pump structure including a pack (in gray), as it indisputably shows a structure that includes air intake 8, switch 3, and contains the motor 2 and turbine 4." *Id.* (referencing Ex. 1625 ¶ 23). Petitioners argue that Patent Owner admits that the alleged pack in Parienti is a "housing." *Id.* at 4.

Petitioners further argue that pipe 9 is part of the pack. Reply 4. Petitioners argue that Parienti's Figure 5 depicts a pump structure and that Parienti's Figure 4 is a cross section of that structure, with that cross section

"clearly show[ing] pipe 9 as being part of that structure." *Id.* at 4–5. Petitioners note that pipe 9 is part of Parienti's pack structure "in much the same way that the '950 [p]atent discloses that the pipe-like air outlet 4302 is part of pack 430" in Figure 4B. *Id.* at 5. Petitioners argue that the depiction in Figure 4 of Parienti directly refutes Patent Owner's position that Parienti does not indicate that pipe 9 is part of its powering device. *Id.*

Petitioners also contend that Patent Owner's reliance on certain disclosures in Parienti actually supports Petitioners' position that pipe 9 is part of Parienti's pack. Reply 5–7. Petitioners argue that Parienti, at column 3, lines 55–57, describes an alternative embodiment where the power device is detachable from mattress 5. *Id.* at 5; *see also* Ex. 1005, 3:54–57 ("For such a use, the powering device comprising the photovoltaic cell system, the motor and the turbine can as well be detached from the mattress, a pipe linking said device either to the mattress, or to the cooling box (23)."). Petitioners explain that this disclosure expressly calls for a pipe linking the powering device to the cooling box, indicating that pipe 9 would be part of the detachable powering device. Reply 5–6.

Petitioners also argue that Parienti's claims 1 and 4 support the position that pipe 9 is part of the pack. Reply 6. Petitioners explain that Parienti's claim 1 recites "at least one air inlet" and claim 4 recites a pipe "through which the 'turbine blows air into the mattress air inlet.'" *Id.* Petitioners argue that this claiming scheme demonstrates that pipe 9 is distinct from the mattress inlet. *Id.*

Petitioners next argue that Parienti, contrary to Patent Owner's argument, does not describe pipe 9 as separate. Reply 6 (referencing

Ex. 1625 ¶ 29). Instead, the passages of Parienti relied on by Patent Owner (Ex. 1005, 3:7–15, 3:20–29) describe functional relationships between pipe 9 and other components. *Id.*; *see also* Ex. 1005, 3:7–15 (describing the operation of valve 19 within pipe 9), 3:20–29 (describing the cooler function, rather than inflation/deflation function, of photovoltaic cells 1, motor 2, and turbine 4). Petitioners assert that a person having ordinary skill in the art would have understood that valve 19, rod 20, and switch 3 (components that are used to open and close pipe 9) are also contained within the pack. Reply 6–7; *see also* Ex. 1625 ¶ 29 (including testimony that a person having ordinary skill in the art would have understood that valve 19, rod 20, and switch 3 would have been contained in the pack "to ensure the proper functional relationship between these components").

In reply, Patent Owner repeats that pipe 9 does not include an interior region that communicates with the inside of the first chamber. Sur-Reply 1–2. Patent Owner argues that pipe 16 is open, such that air within the interior region of the alleged pack "travels to multiple other locations outside." *Id.* at 2. Patent Owner explains that Parienti includes dual passages out of an opening: one through pipe 9 and one through pipe 16. *Id.* at 3. Patent Owner argues that, because air could flow from the interior of Parienti's device through pipe 16 without ever reaching pipe 9, then the interior of Parienti is limited to the region above the green line in their annotated version of Figure 4 (which we reproduced above).

Patent Owner also disputes that the "[]other embodiment" discussed in Parienti relies on a different type of attachment between the powering device and mattress. Sur-Reply 8. Patent Owner also counters Petitioners'

argument that pipe 9 serves the linking function in this other embodiment, as pipe 16 likely serves this function. *Id.* In addressing Petitioners' argument with respect to Parienti's claim 4, Patent Owner argues that the claim indicates that a pipe is used to direct air into an air inlet, rather than extending into the mattress. *Id.* at 8–9. Patent Owner disputes that rod 20 and boss 26, along with switch 3, are part of a pack, as Parienti's figures (other than Figure 6) do not show these components. *Id.* at 9.

With respect to Patent Owner's position that Parienti does not use the terms housing, pack, or container, Patent Owner's argument does not undermine the Petition's showing. As Petitioners argue, the structure depicted in Parienti's Figure 4 is similar to the pack illustrated in Figure 4B, reproduced above. Reply 2–3. Pack 430 includes first air outlet 4302, protruding out the back of pack 430, similar to how pipe 9 protrudes from the structure including motor 2 and turbine 4. *See* Ex. 1001, 5:13–17 ("The pack 430 has an air intake 4301, a first air outlet 4302 connected to the back support 42, and a second air outlet 4302 connected to the mattress pad 41."). Although not dispositive, this similarity shows that the inventor contemplated a pack that included a protruding air outlet, providing some evidentiary support to our finding. *Cf.* Ex. 1625 ¶ 27 ("Parienti's Fig. 4 is a 'cross-section of the device shown in FIG. 5' (Ex. 1005, 1:44) and clearly shows pipe 9 as being part of that structure—notably, in much the same way that the '950 Patent discloses that the pipe-like air outlet 4302 is part of pack 430."). Said a different way, we are not using the disclosure of the '950 patent to augment Parienti's disclosure of the structure housing its motor and turbine. Instead, we are using the disclosure of the '950 patent as evidence

of the reasonableness of Petitioners' interpretation of Parienti's disclosure, particularly as it relates to pipe 9.

Also providing evidence in support of our finding, Parienti discloses that "[i]nflating is performed through the rotation of the turbine in one direction, what causes the suction of ambient air through the protective grid (8) and the introduction of the air into the mattress through the pipe (9)." Ex. 1005, 2:66–32; *see* Pet. 39–40. This statement reflects how air moves from one point in Petitioners' alleged pack to the other end, including pipe 9. *See* Pet. 40 ("Parienti states that pipe 9 communicates the interior region of the pack to the inside of the air mattress 5."); Ex. 1002 ¶ 124.

We recognize that Parienti does not describe, in words, a housing, pack, or container. The test for anticipation, however, "is not an '*ipsissmis verbis*' test"—that is, identity of terminology is not required. *In re Bond*, 910 F.2d 831, 832 (Fed. Cir. 1990). As we discussed above, we find that Parienti's figures *depict* a "pack" as that term would be understood in light of the aspects of the '950 patent Specification discussed above. *See In re Mraz*, 455 F.2d 1069, 1072 (CCPA 1972) ("[W]e did not mean that things patent drawings show clearly are to be *disregarded*. . . . 'Description for the purposes of anticipation can be by drawings alone as well as by words.'").

Also, we do not agree with Patent Owner that Parienti's disclosure of an embodiment where the powering device may be removed from the mattress to supply air to a cooling box teaches away from pipe 9 as part of the pack. Indeed, Parienti discloses, in this alternative embodiment, that its powering device may be used for *both* inflating the mattress and supplying

air to a cooling box, such that including pipe 9 as part of the pack would not be inconsistent with that alternative embodiment. *See* Ex. 1005, 3:54–59 (disclosing that the system is disassociated, so it can be used for multiple purposes, including inflating and deflating the mattress from which it is detached, supplying air to cooling box 23, and inflating and deflating other air mattresses). Patent Owner fails to explain adequately how these multiple uses teach away from having pipe 9 as part of a pack.

We also find that Petitioners have the better reading that the pipe disclosed for the alternative embodiment is pipe 9, rather than pipe 16. *See* Reply 5–6. Parienti states that for using the powering device to cool box 23, "the powering device comprising the photovoltaic cell system, the motor and the turbine can as well be detached from the mattress, *a pipe linking said device either to the mattress, or to the cooling box (23)*." Ex. 1005, 3:54–57 (emphasis added). Parienti discloses only one pipe that links the powering device to the mattress—pipe 9. *See id.*, Fig. 7. Pipe 16 does not interact with mattress 5 to inflate and deflate the mattress, instead it interacts with porous cylinder 17. As such, we find that a reference to a pipe that links the device to either the mattress (from which the powering device was detached) or the cooling box is a reference to pipe 9.

With respect to Patent Owner's arguments that language in Parienti's claims demonstrate that pipe 9 is not part of the pack, we find that Patent Owner's argument does not undermine the Petition's showing, as Petitioners have the better reading of Parienti's claims. We find that the language of Parienti's claim 4 demonstrates that the recited pipe is different from the mattress air inlet, as air is blown into that inlet by way of a pipe. Patent

Owner's argument that the claim language indicates that the pipe blows air into the inlet and not the mattress does not undermine the Petition's showing. Claim 1 recites that air is forced into the mattress through an air inlet, so claim 4, when read together with claim 1, recites a structure where a pipe directs air into the mattress through an air inlet of the mattress. Such a structure is consistent with Petitioners' interpretation of Figure 4, where pipe 9 is part of the pack and that pipe is inserted into the mattress through an inlet.

We also agree with Petitioners and Dr. Beaman that Parienti's disclosure of how switch 3 operates supports a finding that pipe 9 is part of the pack. *See* Reply 6–7; Ex. 1002 ¶ 29. Parienti's Figure 5 shows switch 3 on the top of the structure housing motor 2 and turbine 4, adjacent to grid 8. *See* Ex. 1005, Fig. 5. Parienti explains that translating switch 3 moves boss 26, which acts on rod 20 to open and close valve 19, which resides in pipe 9. *See id.* at 3:7–15; *see also id.*, Fig. 6 (providing a cross-sectional view of pipe 9 with valve 19 and showing boss 26 and rod 20). That is, this collection of components serves to operate valve 19 within pipe 9 and these components (switch 3, boss 26, and rod 20) are within Parienti's structure that houses motor 2 and turbine 4. *See* Ex. 1002 ¶ 29. Patent Owner's argument that other figures do not show these components does not undermine this finding. Parienti uses Figures 4 and 7 to depict operations other than how switch 3 controls valve 19—Figures 5 and 6 are adequate to show the details of the operation.

We acknowledge Patent Owner's argument that certain evidence related to pipe 16 does weigh against pipe 9 being part of the pack, as

Petitioners' position is that pipe 9 is part of the pack and pipe 16, along with pinching system 21, is not part of the pack. In weighing all of the evidence and evaluating all of the arguments, we find that Petitioners have the better position in total. We do not find, for example, that Patent Owner's argument about the lack of details of how pipe 16 interfaces with pipe 9 or details of pinching system 21 undermines Petitioners' position. *See* PO Resp. 22–23. Patent Owner argues that a person having ordinary skill in the art "would find [Parienti's] figures lack detail and [are] designed to communicate a general idea or concept as opposed to a definite design." *Id.* at 23; *cf.* Ex. 1625 ¶ 25 (testifying that the '950 patent disclosure similarly lacks details). A "definite design" is not needed for a disclosure to anticipate a claim limitation. Indeed, Patent Owner's reliance on *Dayco Products* is applicable here. *See* PO Resp. 23. As the Federal Circuit made clear, "'the dispositive question regarding anticipation [i]s whether one *skilled in the art* would *reasonably understand or infer* from the [prior art reference's] teaching' that every claim element was disclosed in that single reference." *Dayco Prod., Inc. v. Total Containment, Inc.*, 329 F.3d 1358, 1368 (Fed. Cir. 2003). Contrary to Patent Owner's argument, the law does not impose a requirement for a reference to disclose a detailed design of the disclosed device.

Also, Patent Owner's argument that, when pipe 16 is open, air within the interior region of the alleged pack "travels to multiple other locations" does not undermine Petitioners' position nor does the language of claim 1 preclude the air within the interior region of the pack from traveling to other locations. *See* Sur-Reply 2; Ex. 1001, 8:55–9:3. Patent Owner does not

adequately explain why the ability of air to travel two alternative paths precludes pipe 9 from being part of the pack. When valve 16 is open and pinching system 21 is closed, motor 2 drives turbine 4 to pull air through grid 8 into the interior region of the structure housing the motor and turbine and push that air into mattress 5 through pipe 9.

In weighing the facts and evaluating the arguments, we credit Dr. Beaman's testimony. *See* Ex. 1002 ¶¶ 120–126; Ex. 1625 ¶¶ 16–31. We credit this testimony, in part, because it is consistent with our understanding of Parienti's disclosure. As one example, Dr. Beaman describes the physical and operational relationship among switch 3, rod 20, valve 19, pipe 9, and grid 8 consistent with our understanding of Parienti. *See* Ex. 1625 ¶ 29; *see also* Reply 6–7 (referencing Ex. 1625 ¶ 29). As another example, Dr. Beaman's characterization of certain language in Parienti's claims and Abstract is consistent with our reading of the language. *See* Ex. 1625 ¶ 30; *see also* Reply 6 (referencing Ex. 1625 ¶ 30).

We accord Dr. Stevick's testimony minimal weight on these issues. *See* Ex. 2029 ¶¶ 59–62. We evaluated his testimony and found that it is not supported by the underlying data upon which he relies. For example, Dr. Stevick opines that "Parienti distinguish[es] this powering device from pipe 9, which is the air inlet to the mattress." *Id.* ¶ 60 (referencing Ex. 1005, 3:65 [stet – presumably line 55]–57; 3:7–15, 3:20–29). But column 3, lines 7 through 15 of Parienti describes how switch 3 is used to operate valve 16 in pipe 9. As we discussed above, we are persuaded that this disclosure supports a finding that pipe 9 (and this ancillary control structure) is part of the powering device, as it directly controls how the powering device

operates. *Cf.* Reply 9; Ex. 1625 ¶ 29. Column 3, lines 20 through 29 of Parienti describes how, in addition to inflating and deflating the mattress, the motor and turbine can bypass pipe 9 to deliver air through pipe 16 to perform a cooler function. Dr. Stevick, on the other hand, does not adequately explain why the ability to bypass pipe 9 (by closing valve 19) would preclude pipe 9 from being part of the pack. Indeed, the '950 patent envisions a similar function, with air being directed through outlet 4302 to inflate back support 42 or through outlet 4302' to inflate mattress 41—yet both structures are part of pack 430. *See* Ex. 1001, 5:1–39. Column 3, lines 55 through 57 of Parienti describes, in an alternative embodiment, that the powering device can be separated from the mattress. Again, Dr. Stevick fails to explain adequately how this disclosure undermines a finding that pipe 9 is part of Parienti's pack.[15]

In summary, for the reasons explained above, we find that the information in the Petition demonstrates, by a preponderance of the evidence, that Parienti discloses that pipe 9 is part of the "pack" containing motor 2 and turbine 4 and including switch 3, boss 26, rod 20, and valve 19.

---

[15] We further note that Dr. Stevick's testimony is nearly identical to the language appearing in the Patent Owner Response, down to the case citation. *Compare* PO Resp. 20–24, *with* Ex. 2029 ¶¶ 59–62. This identity in language causes us to attribute less weight to a declarant's testimony. Although we recognize that certain language in Petitioners' Reply mirrors language in Dr. Beaman's declaration, we determine that Dr. Beaman provides support for his testimony in addition to the language repeated in the Reply. *Compare* Reply 1–7, *with* Ex. 1625 ¶¶ 16–31.

iii. Parienti and "built in"

Claim 1 requires "the pack [being] built in the chamber wall and extend[ing] into an interior of the first chamber." Ex. 1001, 8:61–62 (the "built in" limitation). Petitioners contend that Parienti's pack is built in the chamber wall. Pet. 42–45. We again reproduce Petitioners' annotated version of Parienti's Figure 7, below.

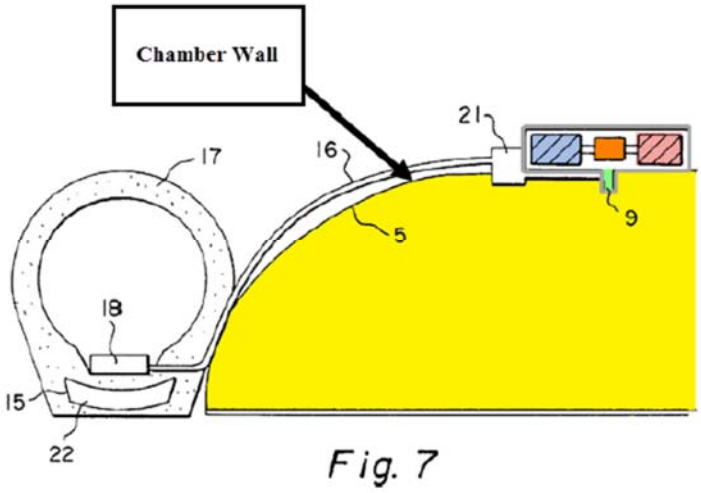

Id. at 43. This annotated figure shows the first chamber in yellow and the alleged pack outlined in grey, with pipe 9 in green. Petitioners contend that Parienti's alleged pack is "built in" the chamber wall because it is glued to the wall, with pipe 9 embedded inside mattress 5. *Id.* at 42 (referencing Ex. 1002 ¶ 128). Petitioners contend that, because Parienti discloses that the alleged pack may be glued to mattress 5, it is integral and not removable from the mattress, that is, "built in." *Id.* at 44. Petitioners also contend that pipe 9, which is part of the pack, extends into the first chamber (mattress 5), satisfying the recitation requiring the pack to extend into an interior of the first chamber. *Id.* at 44–45 (referencing Ex. 1002 ¶ 132; Ex. 1005, Fig. 7).

We find that the information in the Petition demonstrates, by a preponderance of the evidence, that Parienti discloses that its pack, which includes pipe 9, is built in the chamber wall of mattress 5. *See* Pet. 42–45; Ex. 1005, 1:22–25, 3:44–59, Figs. 1, 4, 5, 7, 9. Parienti discloses that its powering device (the alleged pack, including pipe 9), that is, its "device for automatic[ally] inflating and deflating" its mattress, is "made interdependent with the mattress by means of *gluing* or any other means." Ex. 1005, 1:22–25 (emphasis added). Because it is glued, the pack is not detachable (or readily removed) from the exterior surface of the mattress. *See id.*, Fig. 4 (showing the alleged pack on top of mattress 5); *see also* Pet. 45 (showing a colorized version of Figure 7, including mattress 5 in yellow and the pack outlined in gray, which we have reproduced above).

We also find that Parienti's pack, with pipe 9, is integrated into the chamber wall. We find that air mattress 5 includes an air inlet, that is, an opening that allows the powering device to push air into and pull air out of the mattress. This opening accommodates pipe 9. *See* Ex. 1005, Fig. 4; Pet. 45. As such, mattress 5 has an opening in its chamber wall and Parienti's pack, and specifically, pipe 9, takes the place of that opening. In this way, Parienti's pack is integrated into the chamber wall. *Cf.* PO Resp. 24 ("Consequently, at most, only pipe 9 and not the pump is built in the chamber wall and extends into the interior of the first chamber.") (emphasis omitted).

In addition to Patent Owner's arguments that pipe 9 is not part of the pack, Patent Owner argues that Parienti does not disclose that its structure containing motor 2 and turbine 4 is not detachable from mattress 5. PO

Resp. 24. Patent Owner argues that Parienti uses the term "interdependent" to describe the connection between the pack and mattress, and interdependent encompasses detachable from. *Id.* Patent Owner explains that a pack glued on the mattress surface can be detachable, such as by using detachable glues. *Id.* (referencing Ex. 2029 ¶¶ 64–65). Patent Owner adds that Parienti uses the term "interdependent" for attachments that are detachable. *Id.*; *see* Ex. 1005, 2:45–51 ("Furthermore, the mattress (5) can be adapted to the mountain world and comprise, for example, a bedding device made preferably of new, light and insulating materials. Said bedding device can be made interdependent with the mattress through any of prior art processes, zipper or others."); Ex. 2029 ¶ 66.

Patent Owner also argues that Parienti describes its powering device as an "associated device" or "auxiliary device." *See* PO Resp. 25–26. Patent Owner adds that Parienti discloses that its powering device may be detached from its mattress. *Id.* at 26; *see* Ex. 2029 ¶ 66.

Finally, Patent Owner argues that "being *integrated into* the chamber wall means to construct the pack into the chamber wall to make the pair one 'harmonious, interrelated whole.'" PO Resp. 27. Patent Owner continues that "[i]n this way, the pack itself forms a part of the chamber wall and is designed to hold air within the chamber like the other portions of the chamber wall which do not include the pack." *Id.* at 27–28. At oral hearing, Patent Owner's counsel further explained that the integrated into requirement of "built in" requires a hole in the chamber wall, such that the hole accommodates the entire cross section of the pack, that is, the area defined by four sides of the pack. *See* Tr. 33:21–34:9 ("If . . . you're taking

those four sides and you've got a hole and you're filling the hole with the actual pack itself, then and gluing it on, that's what I mean. . . . [B]ut we are talking about taking mainly just you're not just getting a means to get in or out of the pack, its got to be the pack itself that's built in."); *see also id.* at 26:2–35:20 (discussing a pack "built in" with respect to the '950 patent).

Petitioners reply that Patent Owner's argument regarding the detachability of Parienti's pack is directed to an alternative embodiment. Reply 7–8. Petitioners also argue that Patent Owner has previously stated that gluing two items together makes them not detachable from one another and that Dr. Stevick agrees with this statement. *Id.* at 8 (referencing Ex. 2029 ¶ 16). Petitioners also argue that Parienti's pack is built in the wall of mattress 5 by way of pipe 9. *Id.* at 9. Petitioners explain that Parienti's pack "is 'necessary to the completeness' of and provides a 'harmonious, interrelated whole' with the mattress, as the pump pack extends into the mattress and keeps it inflated." *Id.*

In reply, Patent Owner repeats that Parienti uses the word interdependent to describe a connection like a zipper. Sur-Reply 10. Patent Owner also argues that the alleged pack is over the mattress, such that it is not built in. *Id.* at 11.

Patent Owner's arguments do not undermine the information in the Petition. First, we agree with Petitioners that gluing would attach Parienti's powering device to its air mattress so that the device is not detachable (or readily removed) from the exterior surface of the mattress. *See* Pet. 44; Reply 8; Ex. 1002 ¶¶ 128–131; Ex. 1625 ¶¶ 34–37.

Second, Parienti's use of the term "interdependent" for attachment mechanisms that are detachable, such as a zipper, does not undermine our finding. We base our finding on Parienti's disclosure that the pack is *glued* to the mattress, not the use of the term "interdependent." *See* Ex. 1005, 1:24–25. Parienti further states that there is "[n]o more need to get an air pump," further supporting that the glued embodiment is not detachable. *See id.* at 1:25–27. Indeed, the term "interdependent" merely means two things dependent upon one another.[16] This term, in and of itself, does not suggest that this dependence is permanent or temporary. In the case of gluing one structure to another, that dependence is not readily separated. In the case of zippering one item to another, that dependence is temporary.

We also conclude that Patent Owner's reliance on Parienti's cooler box embodiment is misplaced. Parienti clearly discloses that this configuration is an additional embodiment. *See* Ex. 1005, 3:44–46 ("According to *another* embodiment, this cooler principle can be applied to a box (23) separated from the mattress (FIG. 3).") (emphasis added). In this additional embodiment, Parienti expands on its concept of a cylinder for an object, beverage, or foodstuff that receives airflow. *See id.* at 3:20–39. In the additional embodiment, the powering device is made detachable and used to send airflow to box 23, which can be used to cool the interior of a tent, caravan, car, or the like. *See id.* at 3:44–57. Also, the powering device would be available to inflate other air mattresses. *See id.* at 3:57–59. We

[16] *See, e.g.*, MERRIAM-WEBSTER ONLINE DICT., interdependent, available at https://www.merriam-webster.com/dictionary/interdependent (last visited Aug. 27, 2019).

discern no disclosure in Parienti to indicate that this *additional* embodiment is the identical configuration as that disclosed in the rest of Parienti, such that the powering device *glued* to mattress 5 must be detachable.

We also do not agree that the term "built in" requires the *entire* pack to take the place of a section of chamber wall, as we find no support in the Specification of the '950 patent for such a narrow application. Outside of the claims, the '950 patent uses the term "built in" once and "built into" once. In describing the "present invention," the Specification states that the "invention provides a modified air mattress, which has a built-in electric air pump eliminating the need for an external pump." Ex. 1001, 1:24–26. That is, in this regard, the Specification touts that the pump is not external. *See id.* at 1:16–23 (describing the prior art as having a "separately provided" pump).

In describing Figure 4A, the Specification states that "an inflatable product of a fourth embodiment . . . is an air mattress which includes a mattress pad 41 comprising a chamber wall 41a, a back support 42 and an air pump assembly 43 built into the mattress pad 41 to inflate the mattress pad 41 and the back support 42." Ex. 1001, 5:1–6. We reproduce Figure 4A, below.

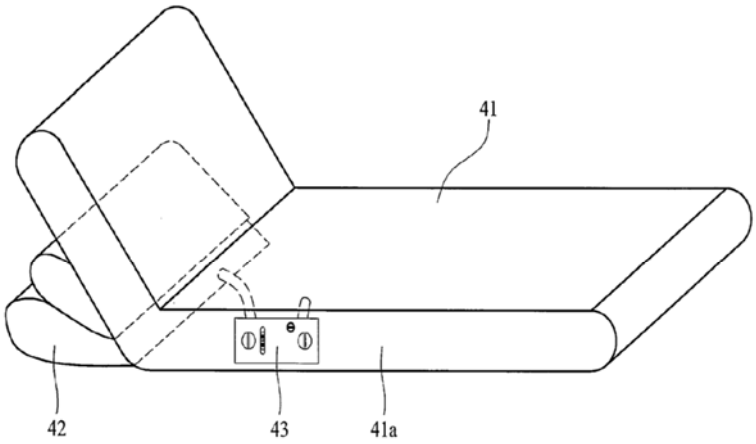

FIG. 4A

Figure 4A depicts "a perspective diagram of an inflatable product." *Id.* at 2:35. The Specification does not further describe this figure or how air pump assembly 43 is positioned in mattress pad 41. As seen from the image above, the figure does not provide any additional detail of pump assembly 43, other than that the face of the pump assembly appears flush with the side wall of mattress pad 41. The Specification does not disclose anything to suggest that the use of the term "built into" *requires* the *entire* pump assembly to take the place of a hole in the side of mattress pad 41. Instead, Patent Owner's argument attempts to read into the term "built in" the exact configuration of how Patent Owner envisions pump assembly 43 in mattress pad 41. Our construction is not so narrow. *See Thorner v. Sony Computer Entm't Am. LLC*, 669 F.3d 1362, 1366–67 (Fed. Cir. 2012) ("It is . . . not enough that the only embodiments, or all of the embodiments, contain a particular limitation. We do not read limitations from the

specification into claims; we do not redefine words. Only the patentee can do that. To constitute disclaimer, there must be a clear and unmistakable disclaimer.”).

In summary, for the reasons discussed above, we find, because a portion of Parienti’s pack (pipe 9) is built in mattress 5, that the information in the Petition demonstrates, by a preponderance of the evidence, that Parienti discloses the “built in” limitation of claim 1.

iv. Conclusion

For the reasons above, we find, based on the complete record, that the information in the Petition demonstrates, by a preponderance of the evidence, that independent claim 1 is unpatentable under 35 U.S.C. § 102 as anticipated by Parienti.

b. Dependent claims 7 and 11–14.

Claim 7 depends from claim 1 and recites “further including a valve switch to open the first valve.” Ex. 1001, 9:26–27. Petitioners contend that Parienti discloses switch 3 as the recited valve switch, which opens valve 19 (the “first valve”) by acting on boss 26 and rod 20. Pet. 51–52; *see also* Pet. 45–46 (indicating that valve 19 is the recited first valve); Ex. 1005, 3:9–16 (describing operation of valve 19), Figs 5, 6 (illustrating switch 3 and associated components for operating valve 19); Ex. 1002 ¶¶ 136–138.

We find, based on our review of the complete record, that the information in the Petition demonstrates, by a preponderance of the evidence, that Parienti discloses a valve switch (switch 3) to open the first valve. *See* Pet. 45–46; Ex. 1005, 3:9–16, Figs. 5, 6; Pet. 51–52; Ex. 1002

¶¶ 136–138. Patent Owner does not dispute Petitioners' contentions with respect to this dependent claim.

Claim 11 depends from claim 1 and recites, "wherein the first valve is a two-way valve." Ex. 1001, 10:14–15. Petitioners contend that "Parienti's valve 19 is a two-way valve because it allows air to flow through it in one direction to inflate mattress 5 and in another direction to deflate mattress 5." Pet. 52 (referencing Ex. 1002 ¶ 150–153); *see, e.g.*, *id.* at 53 (providing an annotated version of Parienti's Figure 4, showing the flow of air though valve 19).

We find, based on our review of the complete record, that the information in the Petition demonstrates, by a preponderance of the evidence, that Parienti discloses that the first valve, valve 19, is a two-way valve, as this single valve is used to inflate and deflate mattress 5. *See* Pet. 52; Ex. 1005, 2:64–3:6 (describing inflation and deflation), 3:7–15 (describing operation of valve 19, rod 20, and boss 26 when switching to inflate or deflate mattress); Ex. 1002 ¶ 150–153. Patent Owner does not dispute Petitioners' contentions with respect to this dependent claim.

Claim 12 depends from claim 1 and recites, "wherein the first valve is arranged to allow manual opening and closing of the first air outlet." Ex. 1001, 10:16–18. Petitioners contend that Parienti's switch 3 is manually operated, such that it manually opens and closes valve 19 and, consequently, the first air outlet, pipe 9. Pet. 53–54; Ex. 1002 ¶¶ 154–155.

We find, based on our review of the complete record, that the information in the Petition demonstrates, by a preponderance of the evidence, that Parienti discloses that the first valve is arranged to allow

manual opening and closing of the first air outlet. *See* Pet. 53–54; Ex. 1005, 3:7–15 (describing manual operation of valve 19, rod 20, and boss 26 when switching to inflate or deflate mattress), Figs. 4, 5, 6 (depicting valve 19 in pipe 9 and boss 26 and rod 20, used to manually open and close valve 19); Ex. 1002 ¶¶ 154–155. Patent Owner does not dispute Petitioners' contentions with respect to this dependent claim.[17]

Claim 13 depends from claim 1 and recites, "wherein the pack comprises a pack wall exposed to the outside of the first chamber, and the air intake communicates the outside of the first chamber to the interior region of the pack through the pack wall." Ex. 1001, 10:19–23. Petitioners provide an annotated version of Parienti's Figure 5, which we reproduce below.

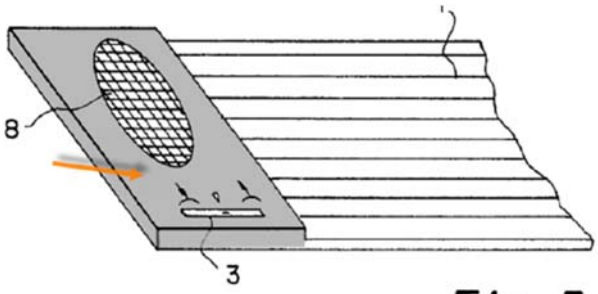

Fig. 5

Pet. 55. Annotated Figure 5 shows the alleged pack in gray and includes an orange arrow indicating the pack wall. Petitioners contend that Parienti discloses a pack wall that is exposed to the outside and that grid 8 is the air intake that communicates the outside of the first chamber to the interior region of the pack through the pack wall. *Id.* at 55–56; Ex. 1002 ¶¶ 156–159.

[17] Patent Owner does dispute that pipe 9 is the recited air outlet. We address that dispute in our analysis of claim 1 and Parienti.

We find, based on our review of the complete record, that the information in the Petition demonstrates, by a preponderance of the evidence, that Parienti discloses that the pack includes a pack wall exposed to the outside of the first chamber, and the air intake communicates the outside of the first chamber to the interior region of the pack through the pack wall. *See* Pet. 55–56. As we found in our analysis of claim 1, Parienti discloses a pack that includes an outward-facing wall that includes grid 8, the air intake. *See, e.g.*, Ex. 1005, Fig. 5 (depicting the pack with an oval-shaped grid 8). As seen in Parienti's Figure 1, this wall is exposed to the outside and outside air is pulled into the interior region of the pack through grid 8. *See id.* at 2:64–3:5; Ex. 1002 ¶¶ 156–159. Patent Owner does not dispute Petitioners' contentions with respect to this dependent claim.

Claim 14 depends from claim 13 and "further compris[es] a control switch to activate the motor, wherein the control switch is disposed on the pack wall." Ex. 1001, 10:24–26. Petitioners contend that Parienti's switch 3 is the recited control switch, which is disposed in the same outside wall of the pack as grid 8. *See* Pet. 56–57; Ex. 1002 ¶¶ 160–162.

We find, based on our review of the complete record, that the information in the Petition demonstrates, by a preponderance of the evidence, that Parienti discloses a control switch to activate the motor, where the control switch is disposed on the pack wall. *See* Pet. 56–57; Ex. 1005, 2:55–66 (discussing operation of switch 3), Fig. 5 (depicting switch 3 on outer wall adjacent to grid 8); Ex. 1002 ¶¶ 160–162. Patent Owner does not dispute Petitioners' contentions with respect to this dependent claim.

For the reasons discussed above we find, based on the complete record, that the information in the Petition demonstrates, by a preponderance of the evidence, that dependent claims 7 and 11–14 are unpatentable under 35 U.S.C. § 102 as anticipated by Parienti.

2. The Challenged Claims are allegedly anticipated by Chaffee

Petitioners assert that Chaffee anticipates the Challenged Claims. Pet. 58–86. Patent Owner challenges certain of Petitioners' contentions. *See* PO Resp. 33–50. Included in these challenges, Patent Owner contends that Chaffee is not properly prior art and that we should dismiss the Chaffee-based grounds because they have already been considered by the Patent Office. We address these two contentions from Patent Owner first, before addressing the merits of the ground.

a. Chaffee as prior art and dismissal of Chaffee grounds

i. Chaffee as prior art

Patent Owner argues that Chaffee is not prior art to the Challenged Claims, because new matter was added during the prosecution of the application that matured into Chaffee. PO Resp. 38–39, 49. Chaffee issued on May 9, 2006, from U.S. Patent Application No. 09/859,706 (the "'706 application"), filed on May 17, 2001. *See* Ex. 1006, (45), (21), (22). Original Figures 3 and 4 filed with the '706 application had an additional reference numeral "90" not present in the issued version of Chaffee. Original Figure 3 and issued Figure 3 are reproduced side-by-side, below, with a red box around the additional reference numeral "90":

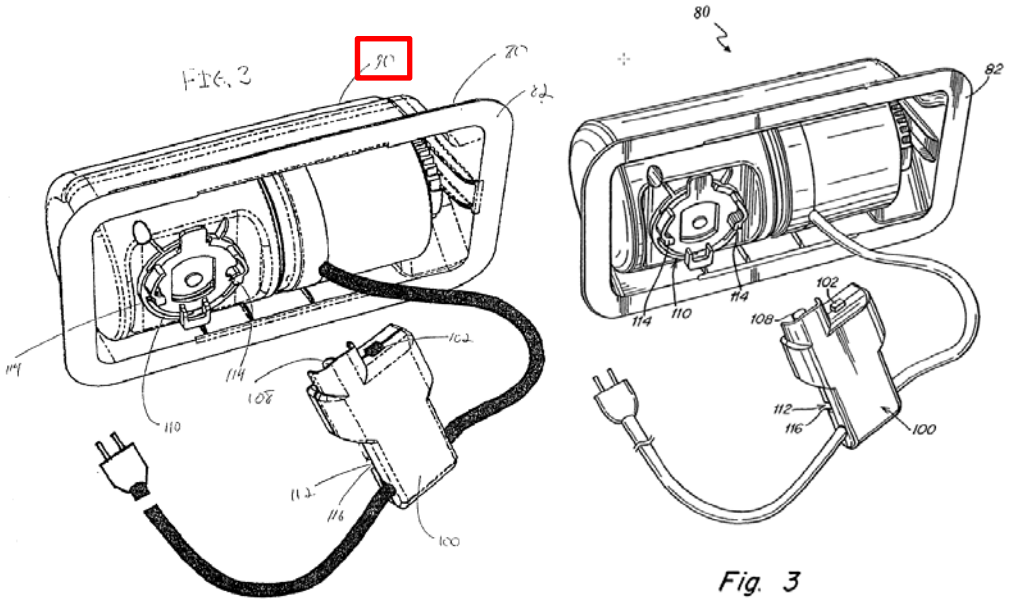

Fig. 3

Ex. 1045, 19; Ex. 1006, Fig. 3. Figure 3 depicts a perspective view of one embodiment of fluid controller 80. *See* Ex. 1006, 2:34–35. Original Figure 4 and issued Figure 4 are reproduced side-by-side, below, with a red box around the additional reference numeral "90":

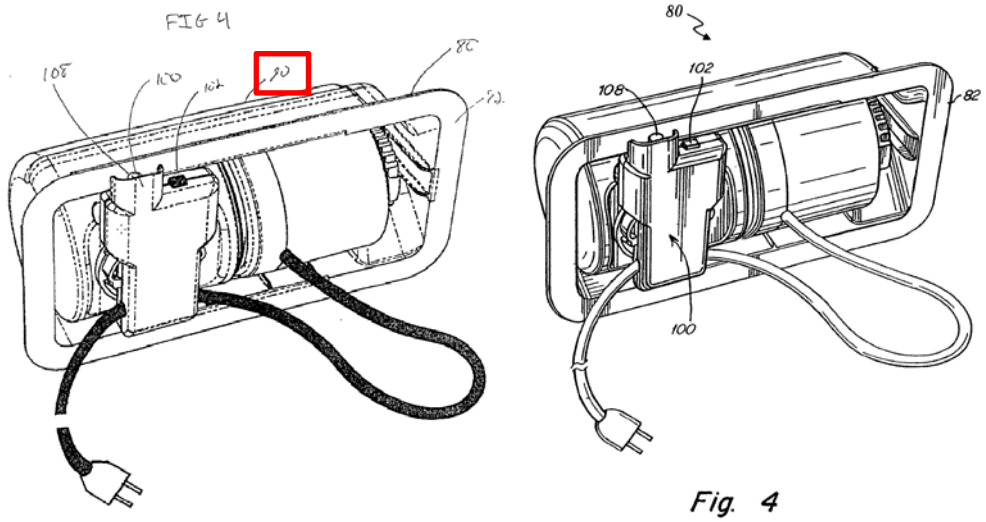

Fig. 4

Ex. 1045, 20; Ex. 1006, Fig. 4. Figure 4 depicts a perspective view of one embodiment of fluid controller 80. *See* Ex. 1006, 2:36–37. Original Figure 5 and issued Figure 5 are reproduced side-by-side, below:

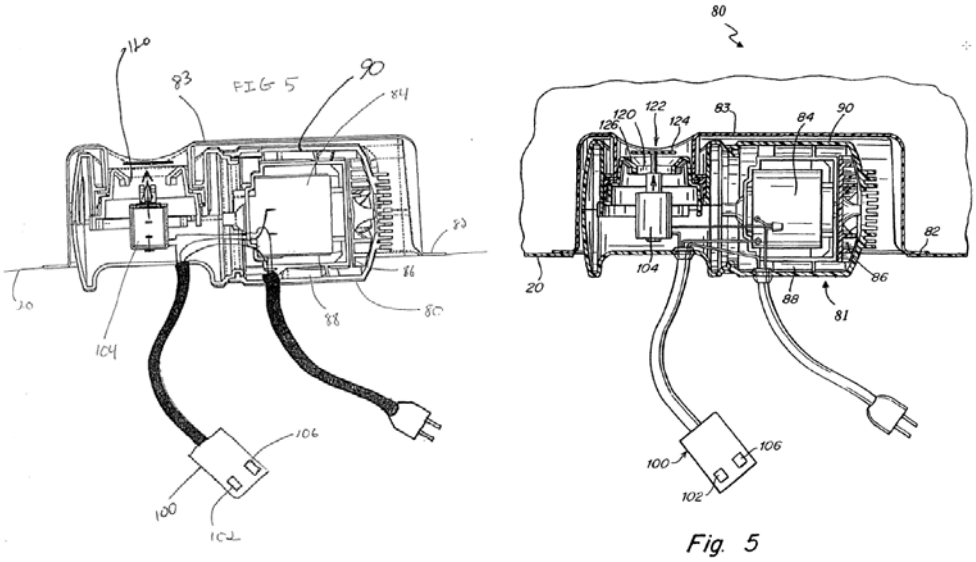

Ex. 1045, 21; Ex. 1006, Fig. 5. Figure 5 depicts a cross-sectional view of one embodiment of fluid controller 80. *See* Ex. 1006, 2:38–39. The applicant filed formal drawings on December 17, 2002, which included the additional reference numerals "90" from the original drawings. *See* Ex. 1045, 116–21.

In an Office Action dated September 7, 2005, the examiner objected to the drawings:

> The drawings are objected to as failing to comply with 37 CFR 1.84(p)(4) because reference character "90" has been used to designate both the housing (90) connected to the flange (82) as shown in Fig. 3 and the housing or covering around the motor (84), impeller (86), conduit (88), solenoid (104), etc. as shown in Fig. 5. There appear[] to be two different structures which Applicant is referring to as a "housing" and these two different structures are being confused with each other. Each of the two different structural elements should be given a separate reference numeral.
>
> ***
>
> The drawings are objected to as failing to comply with 37 CFR 1.84(p)(4) because reference numerals "83" and "90"

> have both been used to designate "fluid impermeable wall" (see Fig. 5) and "housing" (see Fig. 3).

Ex. 1045, 448–449. In response, the applicant modified the then-pending Figures 3 and 4 by deleting the additional reference numerals "90." *See id.* at 498–99 (showing revisions to Figures 3 and 4 in an Amendment, dated December 7, 2005), 542–43 (showing revisions to Figures 3 and 4 in a Supplemental Amendment, dated December 8, 2005). In discussing these amendments, the applicant stated: "Applicant has deleted reference character 90 from FIGS. 3 and 4 of the enclosed annotated drawings so as to eliminate any confusion." *Id.* at 491 (Amendment), 533 (Supplemental Amendment).

With that background, we turn to Patent Owner's arguments. Patent Owner argues that the amendments to these drawings resulted in Chaffee's "disclosure [being] materially different than the disclosure of the original Chaffee [application] with regard to the housing, flange, fluid impermeable wall, and fluid controller." PO Resp. 39. Patent Owner argues that Chaffee "is not a proper printed publication for challenging the '950 Patent claims because its disclosure was modified years after the effective filing date of the '950 Patent." *Id.* at 47 (referencing Ex. 2029 ¶¶ 84–108).

Petitioners contend that Chaffee is prior art under 35 U.S.C. § 102(e) based on the filing date of the '706 application. Pet. 29–30 n.5. In response to Patent Owner's argument, which Petitioners characterize as "undeveloped" and "cursory," Petitioners contend that the amendments removing the label "90" from the figures were clarifying amendments that corrected a mistaken label and do not constitute new matter. Reply 13. Petitioners add that the fact that the Examiner accepted the amendments and

did not object to new matter supports a presumption that these amendments do not constitute new matter, a presumption not rebutted by Patent Owner. *Id.* at 13–14 (citing *Commonwealth Sci. v. Buffalo Tech.*, 542 F.3d 1363, 1380 (Fed. Cir. 2008)).

In reply, Patent Owner appears to argue that the examiner allowing the amendment was not improper, as the examiner could not have foreseen Chaffee's disclosure would be offered for disclosing a flange extending from the pump housing. Sur-Reply 16. This argument seems to suggest that the amendments constitute new matter because of the way Petitioners are asserting the teachings of Chaffee. *See id.*

We determine that the amendments made during prosecution of the application that matured into Chaffee corrected clerical errors in the original drawings to align those drawings with the disclosure in the specification as to housing 90, and thus, did not constitute new matter. The fact that the examiner did not issue a new matter objection in the wake of the amendments supports our determination. *See* Reply 9 (citing *Commonwealth Sci. v. Buffalo Tech.*, 542 F.3d 1363, 1380 (Fed. Cir. 2008)). Also, Patent Owner does not cite to any persuasive authority for us to determine that the amendments constitute new matter based on how Petitioners are interpreting the disclosure.

Consequently, we find that Chaffee is prior art to the '950 patent under 35 U.S.C. § 102(e) based on the filing date of the '706 application.

ii. Dismissal of Chaffee grounds

Patent Owner argues that we should dismiss the Chaffee grounds, as the grounds have already been reviewed by the Patent Office during the

prosecution of the application that matured into the ’950 patent. PO Resp. 48–50. To support this argument, Patent Owner directs us to the Board’s decision in *Agrinomix, LLC v. Mitchell Ellis Products, Inc.*, Case IPR2017-00525 (PTAB June 14, 2017) (Paper 8). *Id.* at 49. In *Agrinomix*, the Board did not institute trial because a reference was relied on by the examiner during the prosecution of the patent at issue in that proceeding. *Id.*

Patent Owner adds that *inter partes* review proceedings should not be used to harass a patent owner, and, here, Petitioners filed seven petitions against Patent Owner. PO Resp. 50.

Petitioners reply that Patent Owner’s argument is improper post-institution. Reply 14 n.5. Patent Owner does not address this argument in its Sur-Reply.

We agree with Petitioners that 35 U.S.C. § 325(d) does not apply post-institution. “In determining whether *to institute* or order a proceeding under this chapter, . . . the Director may take into account whether, and reject the petition or request because, the same or substantially the same prior art or arguments previously were presented to the Office.” 35 U.S.C. § 325(d) (emphasis added). The express language of the statute limits the discretion under this section to the institution phase of the proceeding. Patent Owner does not direct us to any authority that would allow us to expand the reach of this statute to post-institution.

Patent Owner also seems to argue that we should exercise our discretion to dismiss the Chaffee grounds in this proceeding because Petitioners have used *inter partes* review proceedings to harass Patent

Owner. *See* PO Resp. 50. Patent Owner does not cite to any authority to support our exercising discretion to remove certain grounds after institution.

For the reasons above, we do not dismiss the Chaffee-based grounds in this proceeding.

b. Independent claim 1.

i. Undisputed subject matter of claim 1

In this subsection, we address the subject matter recited in independent claim 1 for which Patent Owner does not dispute Petitioners' contentions. First, claim 1 recites "[a]n inflatable product, including: a first chamber comprising a chamber wall." Ex. 1001, 8:55–56. Petitioners contend that Chaffee's inflatable bladder 20 corresponds to the recited first chamber and that bladder 20 includes a chamber wall. Pet. 58–59 (including an annotated version of Chaffee's Figure 2 showing the chamber and chamber wall).

We find, based on the complete record, that the information in the Petition demonstrates, by a preponderance of the evidence, that Chaffee discloses the recited first chamber comprising a chamber wall. *See, e.g.*, Pet. 58–59 (providing analysis for this claim limitation); Ex. 1006, Fig. 2 (showing bladder 20), 3:3–15 ("The embodiment illustrated in F[igure] 2 includes an inflatable device 10 having a substantially fluid impermeable bladder 20 and a fluid controller 80 comprising an electrically powered pump at least partly positioned within bladder 20. . . . Where bladder 20 is intended for use as a mattress, bladder 20 may be constructed in the shape and thickness of a conventional mattress.").

Claim 1 further recites "a pack having an interior region, an air intake communicating the interior region to the outside of the first chamber and a first air outlet communicating the interior region to the inside of the first chamber." Ex. 1001, 8:57–60. Petitioners contend that Chaffee discloses the recited pack. Pet. 59–60 (referencing Ex. 1002 ¶¶ 168–170). First, Petitioners contend that the combination of flange 82, wall 83, and housing 90 forms the pack and that this structure includes an interior region. *Id.* at 60.[18] We reproduce Petitioners' annotated version of Chaffee's Figure 5, below.

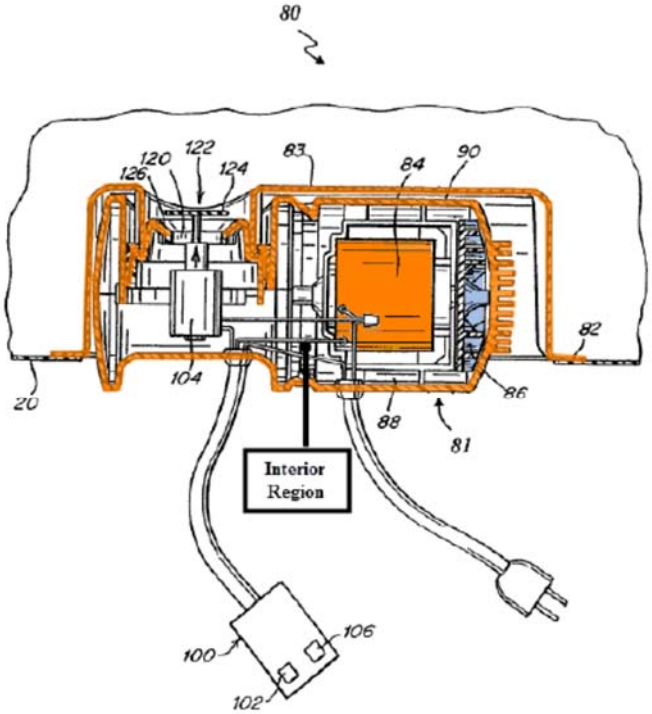

Fig. 5

[18] We recognize that Patent Owner does dispute whether flange 83, wall 83, and housing 90 form a single structure, a dispute we address below in the next subsection.

This annotated version of Figure 5 illustrates the alleged pack in orange and identifies the interior region of the pack. *Id.* at 61. Petitioners explain that "Chaffee . . . disclosed that its [h]ousing/'pack' (orange outline) includes an interior region in which impeller 86 (blue) and motor 84 (orange) are disposed." *Id.* at 60 (referencing Ex. 1006, 4:15–22; Ex. 1002 ¶ 172).

Next, Petitioners contend that Chaffee discloses that the structure includes an air intake communicating the interior region of the pack with region outside the first chamber. Pet. 61–62. Petitioners further contend that Chaffee discloses a first air outlet communicating the interior region to the inside of the first chamber. *Id.* at 63. We reproduce two of Petitioners' annotated versions of Chaffee's Figure 5 emphasizing the air intake and air outlet, below.

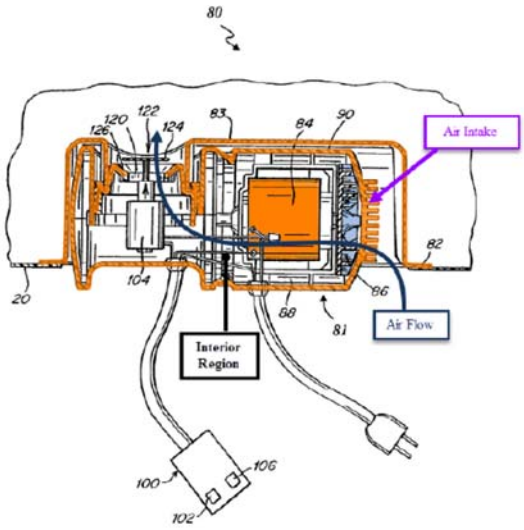

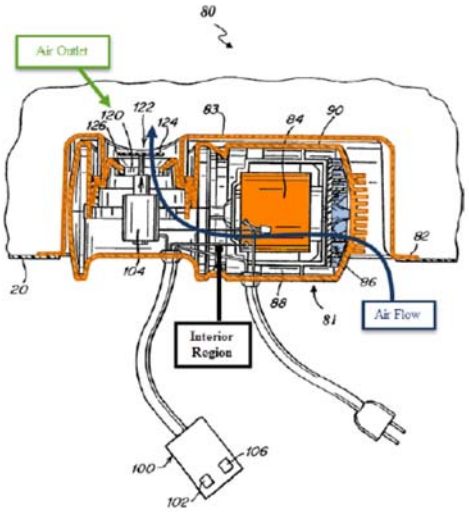

Id. at 62, 63. The annotated version of Figure 5 on the left shows the alleged "pack" in orange and indicates (in purple) the location of the air intake, and the annotated version of Figure 5 on the right indicates (in green) the

location of the air outlet. Both figures show a blue arrow indicating air flow. Petitioners explain that Chaffee discloses that impeller 86 draws fluid (that is, air) into or out of bladder 20 through conduit 88. *Id.* (referencing Ex. 1006, 4:14–15, 3:59–4:22; Ex. 1002 ¶ 173). Petitioners continue that the air flow indicated by the blue arrow shows the air moving from the outside, through the air intake, to the interior region of the alleged "pack," and out the air outlet into bladder 20. *See id.* at 62–63.

We find, based on our review of the complete record, that the information in the Petition demonstrates, by a preponderance of the evidence, that Chaffee discloses a pack having an interior region, an air intake communicating the interior region to the outside of the first chamber and a first air outlet communicating the interior region to the inside of the first chamber. *See* Pet. 59–63 (including annotated versions of Chaffee depicting air intake, air outlet, and interior region of pack); Ex. 1006, 4:11–22 (describing movement of fluid through pump to inflate and deflate bladder 20), Fig. 5 (depicting interior of housing 90, including pump 81 with motor 84, impeller 86, and conduit 88). We also credit Dr. Beaman's testimony with respect to the subject matter of this limitation, in part, because it is consistent with our understanding of Chaffee's disclosure of how its pump is configured and operates. *See* Ex. 1002 ¶¶ 168–174 (describing how Chaffee discloses a pack having an interior region, an air intake communicating the interior region to the outside of the first chamber and a first air outlet communicating the interior region to the inside of the first chamber).

Claim 1 further recites "a first valve for opening and closing the first air outlet, wherein the first valve is connected to the pack." Ex. 1001, 8:63–64. Petitioners contend that Chaffee's controller 80 includes valve 122, which opens to allow air into and out of bladder 20 using solenoid 104. Pet. 69 (referencing Ex. 1006, 6:20–22; Ex. 1002 ¶ 184). Petitioners further contend that valve 122 is connected to the alleged pack. *Id.* Petitioners explain that, in the closed position, valve 122 rests against valve seat 126, which is part of the alleged pack. *Id.* at 70–71 (referencing Ex. 1006, 6:30–33; Ex. 1002 ¶ 185).

We find, based on the complete record, that the information in the Petition demonstrates, by a preponderance of the evidence, that Chaffee discloses the recited first valve. *See, e.g.*, Pet. 69–71 (providing analysis for this claim limitation); Ex. 1006, Fig. 5 (showing valve 122, solenoid 104, and valve seat 126), Fig. 7 (showing valve 122 resting on a valve seat), 6:25–33 (describing the function of valve 122); Ex. 1002 ¶¶ 184–185.[19]

Finally, claim 1 recites "a fan and motor disposed in the interior region of the pack" and further requires "the fan and motor to inflate the first chamber, air is pumped from outside of the first chamber through the air intake into the interior region of the pack, then through the first valve and first air outlet into the first chamber" on activation of the fan and motor.

[19] Petitioners put forward an alternative argument that valve 122 is inherently connected, directly or indirectly to the pack. *See* Pet. 71. As we determine that valve seat 126 is part of the alleged "pack," we need not address this position.

Ex. 1001, 8:65–9:3. Petitioners contend that impeller 86 and motor 84 correspond to the recited fan and motor. Pet. 74.

Petitioners further contend that Chaffee discloses that, when impeller 86 is activated, it draws air in from the outside and into the first chamber through valve 122. Pet. 74–75 (referencing Ex. 1006, 3:65–67, Fig. 5; Ex. 1002 ¶¶ 198–199).

We find, based on the complete record, that the information in the Petition demonstrates, by a preponderance of the evidence, that Chaffee discloses the recited fan and motor. *See, e.g.*, Pet. 74–75 (providing analysis of this claim limitation); Ex. 1006, 3:65–67 (disclosing that motor 84 drives impeller 86), 4:11–15 (disclosing that motor 84 and impeller 86 draws air into and out of bladder 20), 6:15–17 (disclosing that switch 102 energizes the pump to inflate bladder 20), Fig. 5 (depicting motor 84, impeller 86, conduit 88, and valve 122).

ii. Disputed subject matter of claim 1 – the "built in" limitation

Claim 1 requires, in relevant part, "the pack [being] built in the chamber wall and extend[ing] into an interior of the first chamber." Ex. 1001, 8:61–62 (the "built in" limitation). Petitioners contend that Chaffee's alleged pack is built in the chamber wall and extends into an interior of the first chamber. Pet. 64–73. Petitioners contend that Chaffee discloses that its fluid controller 80, which would include the pack, is "at least partially positioned within the bladder." *Id.* at 64 (quoting Ex. 1006, Abstract). Petitioners explain that Chaffee discloses that fluid controller 80 may be connected to bladder 20 using flange 82. *Id.* at 65 (referencing

Ex. 1006, 5:5–8, 7:37–38; Ex. 1002 ¶ 179). We reproduce another of Petitioners' annotated versions of Figure 5, below:

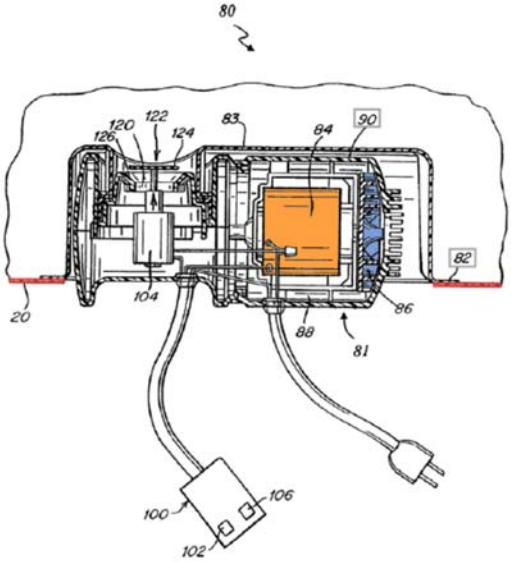

Fig. 5

Id. at 66. This annotated version of Chaffee's Figure 5 shows the chamber wall of bladder 20, where it connects to flange 82, in red. Petitioners explain that "the connection between the flange 82 (which is part of the [pack]) and the chamber wall (red, [above]) of bladder 20 occurs on the inside of the chamber wall and is accomplished 'with an adhesive or heat seal.'" *Id.* at 65 (referencing Ex. 1006, 4:67–5:2, 5:20–27; Ex. 1002 ¶ 179). Petitioners contend that this adhesive or heat-sealed connection results in the pack being built in the chamber wall. *Id.* at 66.

Petitioners further contend that Chaffee's alleged "pack" extends into the interior of the first chamber. Pet. 67. We reproduce another annotated version of Chaffee's Figure 5, below.

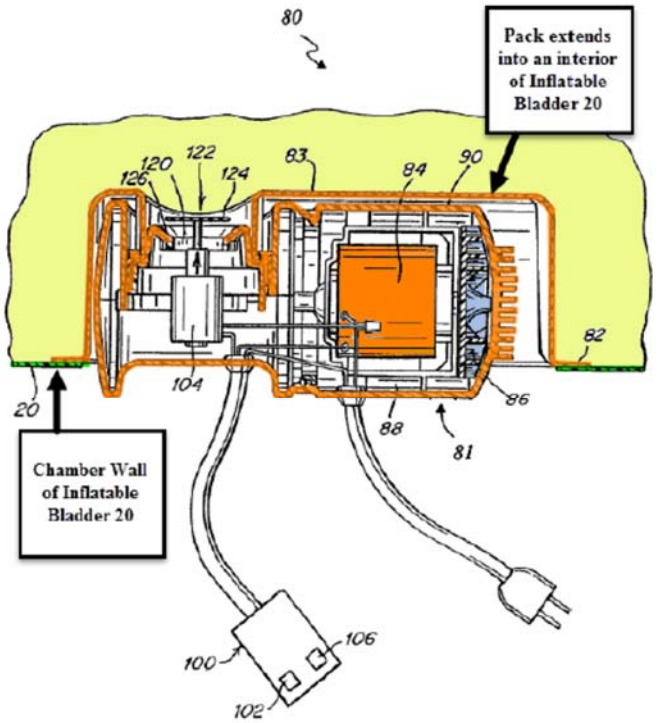

Fig. 5

Id. at 68. This annotated figure shows the alleged "pack" outlined in orange, the first chamber wall in green, and the first chamber in yellow. Petitioners explain that this figure illustrates that the pack extends into the interior of the first chamber. *Id.* at 67 (referencing Ex. 1002 ¶ 181).

We find, based on the complete record, that the information in the Petition demonstrates, by a preponderance of the evidence, that Chaffee discloses a pack that is built in the chamber wall and extends into an interior of the first chamber. *See* Pet. 64–73. In describing connecting fluid controller 80 to bladder 20, Chaffee discloses that "fluid controller 80 may include a portion adapted to connect to bladder 20, such as a flange 82 as illustrated in F[igures] 3–5. Flange 82 may, for example, extend from housing 90 or may be a separate component connected to housing 90."

Ex. 1006, 5:5–9. That is, Chaffee expressly discloses two configurations—one where flange 82 extends from housing 90 and one where flange 82 is a separate component connected to housing 90. We find that, for this first configuration, Chaffee expressly teaches that housing 90, through a flange (flange 82) that extends from the housing, directly attaches to the chamber wall. *See* Pet. 65 (referencing Ex. 1006, 5:5–8, 7:37–38; Ex. 1002 ¶ 179).

We also find that, because flange 82 is heat sealed to the wall of bladder 20 and fluid controller 80 is positioned in an opening in the chamber wall, Chaffee's pack is built in the chamber wall. *See, e.g.*, Ex. 1006, Fig. 5 (depicting an opening in bladder 20 occupied by fluid controller 80, with fluid controller 80 attached to the wall of bladder 20 at flange 82); Pet. 65 ("And as illustrated in Figure 5, below, the connection between the flange 82 (which is part of the Housing) and the chamber wall (red, below) of bladder 20 occurs on the inside of the chamber wall and is accomplished 'with an adhesive or heat seal.'"); Ex. 1006, 4:67–5:2 ("For example, bladder 20 may be adhered or sealed to a portion of fluid controller 80, such as with an adhesive or heat seal.").

As explained by Dr. Beaman, "the point of Chaffee's design was to improve upon the prior art by building the fluid controller in the inflatable body." Ex. 1002 ¶ 177 (referencing Ex. 1006, Abstract); *see also* Ex. 1006, Abstract ("In one embodiment, the application is directed to an inflatable device comprising a substantially fluid impermeable bladder and a fluid controller comprising an electrically powered pump at least partly positioned within the bladder."). Dr. Beaman also testifies that one option for connecting fluid controller 80 to bladder 20 is through flange 82 extending

from housing 90. *See* Ex. 1002 ¶ 178 (discussing one of Chaffee's connections between fluid controller 80 and bladder 20 and providing an annotated version of Chaffee's Figure 5 illustrating the connection). Dr. Beaman opines that this configuration satisfies the construction of the term "built in." *See id.* ¶ 179; *see also* Pet. 65–67 (relying, in part, on Dr. Beaman's testimony).

Chaffee also discloses that

> flange 82 may include additional structure, such as a fluid impermeable wall 83, that may allow it to perform other functions in fluid controller 80 in addition to providing a connection point for bladder 20. Where flange 82 is connected to housing 90, it may be connected anywhere and in any manner that allows it to fluid tightly connect fluid controller 80 and bladder 20. For example, where flange 82 includes a fluid impermeable wall 83, flange 82 may be connected to housing 90 at or near outlet 120 from housing 90.

Ex. 1006, 5:10–19.

Chaffee also discloses that "[w]here flange 82 connects to housing 90 or another portion of fluid controller 80, it is preferred that such connection be reversible." Ex. 1006, 5:32–34. That is, in the second configuration where flange 82 does not extend from housing 90, but is instead connected to housing 90, Chaffee discloses that such a connection is *preferred* to be reversible. We find that this disclosure teaches two connection options—one where the connection is reversible (the preferred option) and one where the connection between flange 82 and housing 90 is permanent.[20] Chaffee

[20] We rely on Chaffee's disclosure of the option where flange 82 extends from housing 90 to support our findings. We do note, however, the use of

continues, giving two examples of reversible connections. *See id.* at 5:35–36 ("[F]lange 82 may snap or screw together with . . . fluid controller 80.").

Chaffee also discloses that "[i]t is also possible to construct the inflatable device such that bladder 20 and fluid controller 80 are reversibly connected, *rather than* two portions of fluid controller 80 being reversibly connected." Ex. 1006, 5:40–43 (emphasis added). Chaffee continues that, "[i]n *either case*, the reversible connection allows the removal of portions of fluid controller 80 for repair or replacement, preventing the entire inflatable device from having to be disposed of in the event of a failure of one component." *Id.* at 5:43–47 (emphasis added). Here, the phrase "either case" refers to the two options previously presented in the same paragraph—either bladder 20 and fluid controller 80 are reversibly connected *or* two portions of fluid controller 80 are reversibly connected. Chaffee then explains why the reversibility in the connection is preferred—to remove a portion of fluid controller 80 so it can be repaired or replaced.

Based on the disclosures from Chaffee above, we find that Chaffee discloses options for connecting fluid controller 80 to bladder 20. One such option is for flange 82 to extend from housing 90. Another option is for flange 82 to be connected to housing 90 in a non-reversible manner. Other

---

the word "preferred" in the disclosure teaches that other options (in this case, a permanent connection between the housing and flange 82) is contemplated. *Cf. Brookhill-Wilk 1, LLC v. Intuitive Surgical, Inc.*, 326 F.3d 1215, 1223 (Fed. Cir. 2003) ("The statements from the description of the preferred embodiment are simply that—descriptions of a preferred embodiment . . . . Those statements do not indicate that the invention can only be used in such a manner.").

options have flange 82 connected to housing 90 in a reversible manner, such that a portion of fluid controller 80 can be separated from bladder 20.

Patent Owner argues that, because Figures 3 and 4, as originally filed, includes reference numeral 90 pointing to a rear wall structure that is attached to flange 82, rather than housing 90, the language in Chaffee on which Petitioners rely (that flange 82 extends from housing 90) does not disclose what Petitioners assert. PO Resp. 36. To support its position, Patent Owner provides annotated versions of Chaffee's Figures 3 and 4, as originally filed, which we reproduce below.

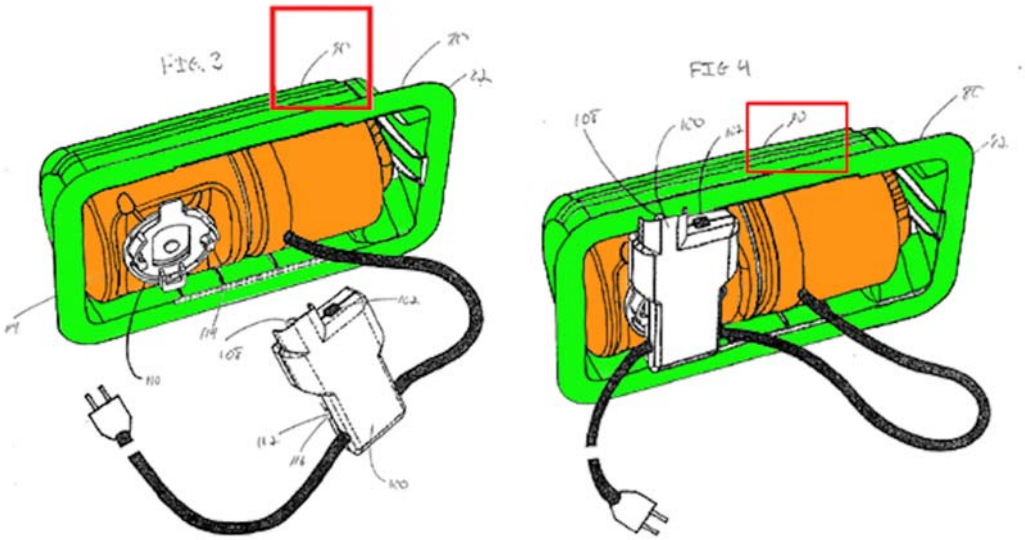

Id. at 35. The annotated figures show an inner structure in orange, an outer structure in green, which includes flange 82, and indicate with a red box the reference numeral 90.

Patent Owner explains that the examiner, in objecting to the original figures, indicated that the figures use reference numeral 90 for two different structures, the housing connected to flange 82 in Figure 3 and the housing containing the motor, impeller, and air conduit shown in Figure 5. PO

Resp. 37–39. Patent Owner argues that, "[g]iven the labeling of Chaffee's specification, the 'extend from' phrase ***literally refers to flange 82 extending from the green wall labeled '90' of FIG. 3 –not from the orange pump housing***" as shown in the annotated version of original Figure 3 we reproduced above. *Id.* at 39. Patent Owner continues that "Chaffee's original disclosure is evidence that the 'extend from' phrase of Chaffee 5:7-9 is a direct reference to the green 'housing' '90' structure of F[igure] 3 as filed, which is fluid impermeable wall 83 in [Chaffee]. ***It is not a teaching that a flange extends from the orange pump housing as Petitioners contend***." *Id.* at 40.

In reply, Petitioners argue that the text in Chaffee never changed through amendment, always using reference numeral 90 to refer to a housing that surrounds the pump. Reply 12. Petitioners add that Figure 5 always had the correct reference numeral showing the relationship between housing 90 and flange 82. *Id.* Petitioners add that, with the amendment that corrected the clerical error of numeral 90, the applicant explained that:

> ***It is clear from the specification*** that the reference character ***90 refers to the housing 90*** that surrounds the inner workings of the pump 81, such as the motor (84), impeller (86), conduit (88), solenoid (104), etc., and ***can also serve as a connection between the fluid controller 80 and the bladder 20***.

Id. (referencing Ex. 1045, 491). Petitioners explain that this assertion by the applicant "is consistent with Original Chaffee's clear and consistent teaching that '[f]lange 82 may, for example, extend from housing 90,' such that flange 82 and housing 90 are portions of the same structure (Original Chaffee, at 9:9–12)." *Id.* at 12–13.

Patent Owner repeats its arguments that Chaffee's prosecution history supports its reading of the "extended from housing 90" language in Chaffee. Sur-Reply 11–13. Patent Owner also argues that Chaffee's use of the term "may" in describing that the housing may protect the pump and inner workings indicates that it may not, that is, that the housing may be the structure identified in original Figures 3 and 4. *Id.* at 14–15. Patent Owner also responds, point by point, to Petitioners' arguments as to Chaffee's prosecution history. *See* Sur-Reply 15–16. With respect to the applicant's statements made in conjunction with the amendment removing the reference numeral 90 from original Figures 3 and 4, Patent Owner argues that these statements do "not take the place of evidence in the record." *Id.* at 16 (citing *In re Schulze*, 346 F.2d 600 (CCPA 1965)).

We understand that in certain situations, information outside the four corners of a reference may be considered in an anticipation analysis. *See, e.g.*, *In re Baxter Travenol Labs.*, 952 F.2d 388, 390 (Fed. Cir. 1991) ("[E]xtrinsic evidence may be considered when it is used to explain . . . the meaning of a reference."); *Advanced Display Sys., Inc. v. Kent State Univ.*, 212 F.3d 1272, 1282 (Fed. Cir. 2000) ("Material not explicitly contained in the single, prior art document may still be considered for purposes of anticipation if that material is incorporated by reference into the document.").[21] Typically, however, this information is used to support the anticipation position, not counter it. Still, we see no reason why we would

[21] We note that none of the priority applications for Chaffee are incorporated by reference into Chaffee. *See* Ex. 1006, 1:5–8.

not consider the prosecution history of Chaffee as evidence of how a person having ordinary skill in the art would have understood Chaffee's disclosure.

Having considered Patent Owner's evidence and arguments, and Petitioners' counter evidence and arguments, we find that Patent Owner's arguments do not undermine the information in the Petition, as the complete record developed at trial does not support Patent Owner's position as to the meaning of the passage in the specification describing how "[f]lange 82 may, for example, extend from housing 90." Ex. 1006, 5:7–9. First, as Petitioners identify, the written description in Chaffee has consistently used reference numeral "90" to refer to a "housing [] that surrounds the inner workings of the pump" and can "provide a connection between fluid controller 80 and bladder 20" by, e.g., flange 82 extending therefrom. *Compare* Ex. 1045, 8:5–8, 9:9–12,[22] *with* Ex. 1006, 4:17–22, 5:4–9; Ex. 1006, 5:7–8. The applicant's statements filed with the drawing amendments at issue further support this understanding:

> It is clear from the specification that the reference character 90 refers to the housing 90 that surrounds the inner workings of the pump 81, such as the motor (84), impeller (86), conduit (88), solenoid (104), etc., and can also serve as a connection between the fluid controller 80 and the bladder 20.

Ex. 1045, 491 (Amendment), 533 (Supplemental Amendment) (same), *quoted at* Reply 12. That is, at the time that the amendment was filed, the applicant clearly understood that the housing, which surrounds motor (84), impeller (86), conduit (88), and solenoid (104) can serve as a connection

[22] These citations to Exhibit 1045 refer to the page numbers added for this proceeding, not the internal pagination.

between fluid controller 80 and bladder 20. Patent Owner does not explain how this statement aligns with its reading of Chaffee. Instead, Patent Owner relies on *In re Schulze* for the proposition that attorney argument does not take the place of evidence in the record. *See* Sur-Reply 16. But *Schulze* differs from the facts here. In *Schulze*, the applicant argued in its brief that the Board did not consider a claim limitation requiring a step be performed "close to" a location nor did the Board consider the importance of certain subject matter recited in dependent claims. *See Schulze*, 346 F.2d at 602. The court found that the evidence of record did not support that the "close to" requirement was in the claims nor did it support the importance of the subject matter recited in dependent claims as argued in the brief. *See id.* Here, the applicant's statement *is* evidence in the record that informs the public of the underlying interactions between the applicant and the Patent Office that resulted in Chaffee as an issued patent.

Second, also as argued by Petitioners, the labelling in original Figure 5 in Chaffee—and issued Figure 5—remained unchanged as to housing 90, and consistently supports the understanding of housing 90 as a structure surrounding the inner workings of the pump (rather than identifying the structure referred to as wall 83 in Chaffee as issued). *See* Ex. 1045, 21 (original Figure 5), 119 (formal version of original Figure 5), 500 (showing revisions in Amendment), 544 (same in Supplemental Amendment), 508 (showing issued version in Amendment), 552 (same in Supplemental Amendment); Ex. 1006, Fig. 5, 5:10–11 (discussing "fluid impermeable wall 83"). In light of the complete record as identified above, we find that one of ordinary skill in the art would have understood housing 90 as a structure that

"surrounds the inner workings of the pump" and can "provide a connection between fluid controller 80 and bladder 20" by (in one embodiment) flange 82 extending from housing 90 as a different portion of the same structural component.

Patent Owner next argues that the configuration depicted in Chaffee's Figure 5 is not a one-piece housing. PO Resp. 41. Patent Owner explains that the cross-hatching in Figure 5 illustrates that housing 90 differs from impermeable wall 83 and flange 82. *Id.* Patent Owner provides an excerpted and annotated version of Chaffee's Figure 5, which we reproduce below.

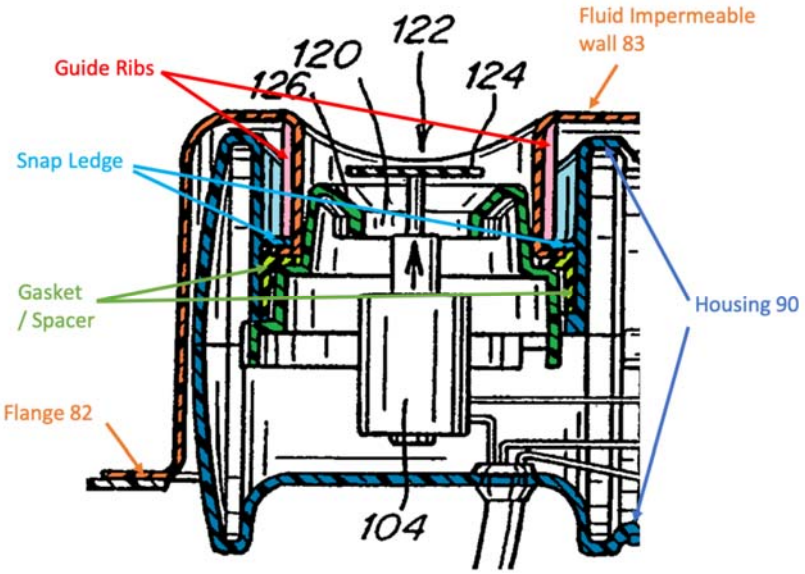

Id. at 42 (referencing Ex. 2029 ¶ 99). This annotated excerpt of Chaffee's Figure 5 shows components of the housing and its connection to fluid impermeable wall 83 in different colors. Patent Owner contends that a person having ordinary skill in the art would have appreciated that this figure "shows that housing 90 itself is formed of multiple interconnected

structures that are shaped and designed to fit together; i.e., a multiple-piece housing." *Id.* (referencing Ex. 2029 ¶ 100). Patent Owner also argues that a person having ordinary skill in the art would have understood that the images in Chaffee all show a removable pump housing. *Id.* at 42–43 (referencing Ex. 2029 ¶ 102).

Patent Owner argues that these removable housings are not "built in." PO Resp. 41. Patent Owner directs us to the following disclosure in Chaffee to support its position:

> As used herein, an object such as a fluid controller, that is "positioned within" a bladder occupies a portion of the volume that would normally be occupied by the bladder, ***but need not be within the wall of the bladder***. For example, a fluid controller could be located within a recess in the wall of a bladder and be "positioned within" the bladder, as this term is defined and used herein.

Id. at 42 (quoting Ex. 1006, 2:60–67, with emphasis added in the PO Resp.).

Patent Owner explains that Chaffee employs flange 82 to reversibly connect fluid controller 80 to bladder 20. PO Resp. 45–46. Patent Owner argues that, because housing 90 is reversibly connected to flange 82, the housing (or pack) is not built into the chamber wall. *Id.* at 46.

Patent Owner next argues that, even if Chaffee teaches that flange 82 is integral with housing 90, it still does not teach a pack built in the chamber wall. PO Resp. 46. Patent Owner argues that the phrase "extends from" "can simply refer to a distance from one point to another." *Id.* Patent Owner continues that, even if we find that the "extends from" language means that housing 90 and flange 82 are a single piece, Chaffee still

discloses the fluid controller 80 is removable from bladder 20. *Id.* (referencing Ex. 1006, 5:40–45).

Petitioners reply that Patent Owner's arguments are based on an alternative embodiment in Chaffee. Reply 10. Petitioners explain that the language used in Chaffee's disclosure "demonstrate[s] that Chaffee contemplated another design in which flange 82 and housing 90 were not separate, connectable structures but, rather, different portions of the same structure." *Id.* at 10–11 (referencing Ex. 1625 ¶¶ 40–47).

Petitioners emphasize that Chaffee's disclosure states that "[f]lange 82 may, for example, extend from housing 90 ***or*** may be a separate component connected to housing 90." Reply 11 (quoting Ex. 1006, 5:7–9, with emphasis added in Reply). That is, the use of the word "or" demonstrates that Chaffee contemplated flange 82 as either extending from housing 90 or being a separate component connected to housing 90. Petitioners add that Chaffee uses broad language in its disclosure with respect to connecting fluid controller 80 to bladder 20, stating that the connection may be made in any manner that allows a pump to supply fluid to the bladder. *Id.* (referencing Ex. 1625 ¶ 42 and Ex. 4:19–22, 4:63–67 and quoting Ex. 1006, 4:42–45). Petitioners also argue that Dr. Stevick's interpretation of the term "or" in the above-quoted statement to mean "said another way," is "strained" and "baseless." *Id.* (referencing Ex. 1602, 610:21–24, 611:15).

In reply, Patent Owner directs us to Chaffee's language at column 5, lines 40 to 43. Sur-Reply 14. Patent Owner argues that Petitioners' reliance on Chaffee at column 5, lines 7 and 9 and column 4, lines 42 to 45 does not

support Petitioners' position as that disclosure is directed to a reversible connection. *Id.*

Having considered Patent Owner's evidence and arguments, and Petitioners' counter evidence and arguments, we find that Patent Owner's arguments do not undermine the information in the Petition, as the complete record developed at trial does not support Patent Owner's position that Chaffee does not disclose an embodiment where its pack is built in the chamber wall.

As an initial point, we agree with Patent Owner that the structure illustrated in Chaffee's Figure 5 is likely a reversible connection between housing 90 and fluid impermeable wall 83. *See* PO Resp. 42. We credit Dr. Stevick's analysis in this regard, as it is consistent with the depiction in Figure 5, given the use of cross-hatching. *See* Ex. 2029 ¶ 99. We also agree with Patent Owner that Chaffee's *preferred* structure is to have fluid controller 80 reversibly connected to bladder 20. *See* PO Resp. 45–46. That said, the *disclosures* of Chaffee are not limited to the *depictions* in the figures. And here, Petitioners have clearly relied on the statement at column 5, lines 7 to 9 of Chaffee to support their position as to the "built in" limitation. Also, as we explained above, in connection with our findings as to the "built in" limitation, we find that Chaffee discloses a non-reversible embodiment, even if that embodiment is not preferred. *See* Ex. 1006, 5:7–9 (describing two alternative configurations, one where flange 82 extends from housing 90).

Patent Owner's reliance on Chaffee at column 2, lines 60 to 67 is misplaced. Indeed, we find that this statement supports Petitioners' position.

In this statement, Chaffee discloses that the term "positioned within" is used broadly in its disclosure to not only mean that the fluid controller occupies a portion of the volume of the bladder, but *also* encompasses a configuration where the controller is located in a recess. *See* Ex. 1006, 2:6—67.

Patent Owner's position that the phrase "extends from" means a distance from one point to another is also unavailing. In the context of the Chaffee disclosure (and our findings above), the presence of the disjunctive "or" in the same sentence indicates that the disclosure that flange 82 may "extend from" housing 90—which precedes the "or"—would be understood as *different* from (i.e., an alternative to) the disclosure that flange 82 "may be a separate component connected to housing 90"—which follows the "or." *See* Ex. 1006, 5:7–9. We do not agree with Dr. Stevick, that the use of "or" means "said another way," as we find no support for such a reading in Chaffee. *See, e.g., SkinMedica, Inc. v. Histogen Inc.*, 727 F.3d 1187, 1199–1200 (Fed. Cir. 2013) (discussing how the use of a disjunctive "or" in a specification indicates alternatives).

As to Patent Owner's argument that the disclosure in Chaffee at column 5, lines 40 to 45 indicates that even a one-piece housing 90/flange 82 structure would not be built in as that term is used in the claims (*see* PO Resp. 46), we find that Patent Owner misinterprets Chaffee. This language in Chaffee discusses an *alternative* configuration to a reversible connection between two portions of fluid controller 80—a configuration with the entirety of fluid controller 80 is reversibly connected to bladder 20. This disclosure of two alternative ways to configure a reversible connection does

not change Chaffee's other disclosure of an alternative where flange 82 extends from housing 90.[23]

In conclusion, we find that the information in the Petition demonstrates, by a preponderance of the evidence, that Chaffee discloses a pack that is built in the chamber wall and extends into an interior of the first chamber, at least for the reasons that Chaffee expressly discloses a configuration where flange 82, which is heat sealed to bladder 20, extends from housing 90 and Chaffee's Figure 5 depicts housing 90 extending into bladder 20, with flange 82 connected to bladder 20.

iii. Conclusion as to claim 1

For the reasons above, we find, based on the complete record, that the information in the Petition demonstrates, by a preponderance of the evidence, that independent claim 1 is unpatentable under 35 U.S.C. § 102 as anticipated by Chaffee.

b. Dependent claims 7 and 11–14.

Claim 7 depends from claim 1 and recites "further including a valve switch to open the first valve." Ex. 1001, 9:26–27. Petitioners contend that Chaffee discloses switch 106 that acts on solenoid 104 to open valve 122. Pet. 78 (providing a colorized version of Chaffee's figure 5, showing

[23] Further evidence supports Chaffee encompassing embodiments where the fluid controller is reversibly connected to bladder 20 *and* embodiments where the fluid controller is *permanently* connected to bladder 20. For example, both independent claim 1 and independent claim 34 of Chaffee recite "wherein the fluid controller is *permanently* coupled to the bladder." *See* Ex. 1006, 7:25–26, 9:34–35 (emphasis added).

switch 106, solenoid 104, and valve 112; referencing Ex. 1006, 6:22–28, 4:13–15, 3:59–4:10, Ex. 1002 ¶ 200).

We find, based on our review of the complete record, that the information in the Petition demonstrates, by a preponderance of the evidence, that Chaffee discloses a valve switch to open the first valve. *See* Pet. 78; Ex. 1006, 6:20–28 (discussing the use of switch 106), Fig. 5 (depicting switch 106). Patent Owner does not dispute Petitioners' contentions with respect to this dependent claim.

Claim 11 depends from claim 1 and recites, "wherein the first valve is a two-way valve." Ex. 1001, 10:14–15. Petitioners contend that "valve 122 (the first valve) is a two-way valve because it allows air to flow through it in one direction to inflate bladder 20 and in another direction to deflate bladder 20." Pet. 79 (referencing Ex. 1002 ¶ 202). Petitioners explain that, in Chaffee, impeller 86 pushes air into or draws air out of bladder 20 through valve 122. *Id.* (referencing Ex. 1006, 4:13–15; Ex. 1002 ¶ 203); *see id.* at 80 (providing an annotated version of Chaffee's Figure 5 showing the airflow path).

We find, based on our review of the complete record, that the information in the Petition demonstrates, by a preponderance of the evidence, that Chaffee discloses that the first valve, valve 122, is a two-way valve, as this single valve is used for both inflating and deflating bladder 20. *See* Pet. 78–80; Ex. 1006, 4:13–15, 3:39–4:10, Fig. 5; Ex. 1002 ¶¶ 202–203. Patent Owner does not dispute Petitioners' contentions with respect to this dependent claim.

Claim 12 depends from claim 1 and recites, "wherein the first valve is arranged to allow manual opening and closing of the first air outlet." Ex. 1001, 10:16–18. Petitioners contend that adjustment device 100 allows for manually opening and closing valve 122. Pet. 80 (referencing Ex. 1002 ¶ 205). Petitioners direct us to Chaffee's disclosure that adjustment device 100 can mechanically or electro-mechanically open valve 122, by actuating switch 106. *Id.* at 80–81 (referencing Ex. 1006, 6:9–10, 6:22–28, Fig. 5; Ex. 1002 ¶ 205). Petitioners add that a mechanical opening mechanism results in manually opening the valve, since the power employed to open the valve comes from a person, rather than an electric source. *Id.* at 81.

We find, based on our review of the complete record, that the information in the Petition demonstrates, by a preponderance of the evidence, that Chaffee discloses that the first valve is arranged to allow manual opening and closing of the first air outlet, as Chaffee discloses that adjustment device 100, with switch 106, can operate to mechanically open the valve. *See* Pet. 80–81; Ex. 1006, 6:9–10, 6:22–28, Fig. 5; Ex. 1002 ¶¶ 205–206. Patent Owner does not dispute Petitioners' contentions with respect to this dependent claim.

Claim 13 depends from claim 1 and recites, "wherein the pack comprises a pack wall exposed to the outside of the first chamber, and the air intake communicates the outside of the first chamber to the interior region of the pack through the pack wall." Ex. 1001, 10:19–23. Petitioners contend that Chaffee's pack has a wall exposed to the outside of bladder 20 (the first chamber). Pet. 82 (referencing Ex. 1002 ¶ 208). Petitioners annotate

Chaffee's Figures 4 and 5 to identify the pack wall that is exposed to the outside of bladder 20. *See* Pet. 83 (including arrows identifying the outside wall). Petitioners also contend that Chaffee operates to communicate air from the outside of the first chamber to the interior region of the pack through the pack wall. *Id.* at 83–84 (referencing Ex. 1006, 4:14–15; Ex. 1002 ¶ 209). Petitioners provide an annotated version of Chaffee's Figure 5, which we reproduce below.

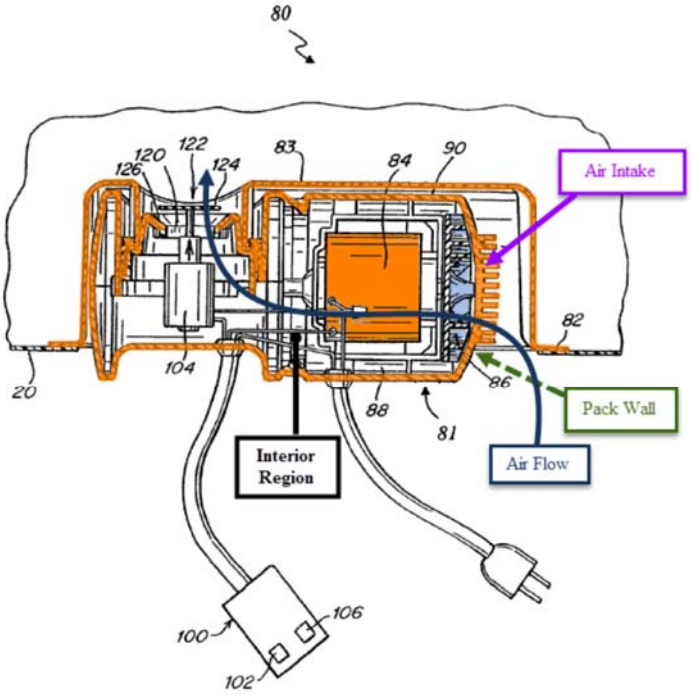

Fig. 5

Id. at 84. This annotated version of Chaffee's Figure 5 depicts the flow of outside air through the air intake of the wall of housing 90, into the interior region of the housing, and through valve 122.

We find, based on our review of the complete record, that the information in the Petition demonstrates, by a preponderance of the

evidence, that Chaffee discloses that the pack includes a pack wall exposed to the outside of the first chamber, and the air intake communicates the outside of the first chamber to the interior region of the pack through the pack wall. *See* Pet. 82–84; Ex. 1006, 4:14–15, Fig. 5; Ex. 1002 ¶¶ 208–209. We credit Dr. Beaman's testimony as to the movement of air through housing 90, in part, because it is consistent with our understanding of Chaffee. *See* Ex. 1002 ¶¶ 208–209. Patent Owner does not dispute Petitioners' contentions with respect to this dependent claim.

Claim 14 depends from claim 13 and "further compris[es] a control switch to activate the motor, wherein the control switch is disposed on the pack wall." Ex. 1001, 10:24–26. Petitioners contend that Chaffee discloses that switch 102 activates the motor. Pet. 85 (referencing Ex. 1006, 6:10–17; Ex. 1002 ¶ 211). Petitioners contend that Chaffee discloses that switch 102 may be connected to fluid controller 80. *Id.* at 86 (referencing Ex. 1006, 6:35–36; Ex. 1002 ¶ 212). Petitioners also contend that adjustment device 100, which includes switch 102, "may be connected to fluid controller 80 ***at a conveniently located position such that it is easily found, particularly when inflatable device 10 is in use***." *Id.* (quoting Ex. 1006, 6:36–49, with emphasis in Petition). Petitioners argue that "[b]ecause the pack wall defines the outer structure of fluid controller 80, Chaffee . . . disclose[s] that adjustment device 100 (and, thus, switch 102) is connectable to the pack wall and, as a result, disposed thereon." *Id.* (referencing Ex. 1006, 6:56–59; Ex. 1002 ¶ 212).

We find, based on our review of the complete record, that the information in the Petition demonstrates, by a preponderance of the

evidence, that Chaffee discloses a control switch to activate the motor, where the control switch is disposed on the pack wall. *See* Pet. 85–86; Ex. 1006, 6:10–17, 6:36–49, 6:56–59; Ex. 1002 ¶¶ 211–212; *see also* Ex. 1006, Figs. 4, 7, 8 (illustrating how adjustment device 100 can be located on fluid controller 80). Patent Owner does not dispute Petitioners' contentions with respect to this dependent claim.

For the reasons above, we find, based on the complete record, that the information in the Petition demonstrates, by a preponderance of the evidence, that dependent claims 7 and 11–14 are unpatentable under 35 U.S.C. § 102 as anticipated by Chaffee.

D. Asserted Grounds of Unpatentability based on Obviousness

Petitioners assert three grounds of unpatentability based on obviousness. *See* Pet. 18.

> Section 103(a) [of 35 U.S.C.] forbids issuance of a patent when "the differences between the subject matter sought to be patented and the prior art are such that the subject matter as a whole would have been obvious at the time the invention was made to a person having ordinary skill in the art to which said subject matter pertains."

KSR Int'l Co. v. Teleflex Inc., 550 U.S. 398, 406 (2007).

The question of obviousness is resolved on the basis of underlying factual determinations, including: (1) the scope and content of the prior art; (2) any differences between the claimed subject matter and the prior art; (3) the level of ordinary skill in the art;[24] and (4) when available, secondary

[24] We address the level of ordinary skill in the art in Section II.A., *supra*.

considerations, such as commercial success, long felt but unsolved needs, and failure of others.[25] *Graham v. John Deere Co.*, 383 U.S. 1, 17–18 (1966).

1. The Challenged Claims are allegedly unpatentable over Chaffee

The Petition states that, "to the extent the Challenged Claims are not anticipated for the reasons set forth in Ground 2, including, in particular, the "built-in" analysis in §VII.C.1.c, Chaffee '972 alone would have rendered the Challenged Claims obvious." Pet. 86. As we discuss above in connection with our analysis of whether Chaffee anticipates claim 1, we find that Chaffee discloses the "built in" limitation of claim 1 and anticipates the Challenged Claims. Accordingly, we need not reach this alternative ground. *See SAS Inst., Inc. v. Iancu*, 138 S. Ct. 1348, 1357 (2018) (stating that "the petitioner's contentions . . . define the scope of the litigation all the way from institution through to conclusion"); *see also, e.g.*, *SK Hynix Inc. v. Netlist, Inc.*, IPR2017-00692, Paper 25 at 40 (PTAB July 5, 2018) (determining all challenged claims to be unpatentable and not addressing additional grounds).

2. Claim 14 is allegedly unpatentable over Chaffee and Parienti

The Petition states that Chaffee discloses the subject matter of claim 14 and, "to the extent the Board disagrees," a person having ordinary skill in the art "would have been motivated to mount Chaffee '972's control switch on its pack wall in view of the related teachings found Parienti." Pet. 91. As

[25] The record includes extensive evidence directed to secondary considerations. *See* PO Resp. 68–78; Reply 21–27; Sur-Reply 19–28.

we discuss above in connection with our analysis of whether Chaffee anticipates claim 14, we find that Chaffee discloses the subject matter of claim 14. Accordingly, we need not reach this alternative ground. *See SAS Inst.*, 138 S. Ct. at 1357; *SK Hynix Inc.*, IPR2017-00692, Paper 25 at 40.

3. The Challenged Claims are allegedly unpatentable over Parienti and Chaffee or Goldsmith

The Petition states that, "to the extent the Challenged Claims are not anticipated for the reasons set forth in Ground 1, including, in particular, the 'built-in' analysis in §VII.B.1.c, the Challenged Claims are invalid as obvious in view of Parienti combined with Chaffee . . . or Goldsmith." Pet. 93. As we discuss above in connection with our analysis of whether Parienti anticipates claim 1, we find that Parienti discloses the "built in" limitation of claim 1 and anticipates the Challenged Claims. Accordingly, we need not reach this alternative ground. *See SAS Inst.*, 138 S. Ct. at 1357; *SK Hynix Inc.*, IPR2017-00692, Paper 25 at 40.

E. Motions to Exclude

1. Petitioners' motion to exclude evidence

Petitioners filed a motion to exclude certain exhibits that Petitioners contend are not cited in the Patent Owner Response, Sur-Reply, or any expert declaration. Paper 92, 1. Petitioners seek to exclude this evidence (the "Uncited Exhibits") as irrelevant under Federal Rules of Evidence Rules 401 and 402. *Id.* Petitioners also argue that certain paragraphs in Ex. 2029 (Dr. Stevick's Declaration) and Ex. 2638 (Dr. Becker's Declaration) (the "Declaration Portions") should be excluded. *Id.* at 2–6.

a. Uncited Exhibits

With respect to the Uncited Exhibits (Exs. 2031, 2032, 2033, 2043, 2044, 2045, and 2748), Petitioners argue that prior Board decisions provide that exhibits not cited in a patent owner's papers should be excluded. Paper 92, 1–2.

In opposition, Patent Owner argues that certain of the Uncited Exhibits are exhibits to depositions. Paper 97, 1. Specifically, Patent Owner argues that Exhibits 2031, 2032, and 2033, are exhibits to Dr. Beaman's deposition testimony (Exhibit 2040, the "December Deposition") and that the deposition is cited in Patent Owner's papers. *Id.* Patent Owner adds that Petitioners did not properly object to the evidence, as they did not object to the evidence during the depositions. *Id.* at 1–2.

Petitioners note, with respect to Exhibits 2043, 2044, 2045, and 2748, Patent Owner does not contest their exclusion. Paper 100, 1 n.1. Petitioners further reply that Patent Owner does not identify where in its papers it relies on Dr. Beaman's testimony directed to any of the exhibits challenged by the motion (Exhibits 2031, 2032, and 2033). *Id.* at 2. Petitioners argue that, without reliance on these sections, the exhibits should be excluded. *Id.* at 2–3.

Petitioners also argue that Patent Owner's argument that Petitioners failed to object at the deposition is nonsensical. Paper 100, 3. Petitioners argue that they could not have known at the time of the deposition that Patent Owner would not rely on those exhibits in its later-filed papers. *Id.* at 3–4.

As to Exhibits 2043, 2044, 2045, and 2748, which are not contested by Patent Owner, we deny Petitioners' motion as moot, as we do not rely on them in this Final Written Decision. *See* Patent Trial and Appeal Board, Trial Practice Guide Update, 17 (August 2018) ("Trial Practice Guide August Update"), available at https://go.usa.gov/xU7GP ("In the Board's experience, consideration of the objected-to evidence is often unnecessary to resolve the patentability of the challenged claims, and the motion to exclude is moot."); *see also* Office Patent Trial Practice Guide, August 2018 Update, 83 Fed. Reg. 39,989 (Aug. 13, 2018) (notice).

We also deny Petitioners' motion as to the other Uncited Exhibits (Exhibits 2031, 2032, and 2033) as moot. As Patent Owner explains, these exhibits were used in conducting Dr. Beaman's December Deposition (Ex. 2040) and the complete deposition transcript is in the record. We do not rely on these exhibits in our Final Written Decision, nor do we rely on Dr. Beaman's deposition.

b. Declaration Portions

With respect to the Declaration Portions, Petitioners argue that this evidence represents arguments that are improperly incorporated by reference by Patent Owner. Paper 92, 2–6.

Patent Owner argues that a motion to exclude evidence is not the proper vehicle to address incorporation by reference. Paper 97, 3. Patent Owner explains that we ruled on a motion to strike directed to the Declaration Portions. *Id.*; *see* Paper 74 (providing an Order denying Petitioners' motion to strike). Patent Owner also argues that Petitioners' motion improperly incorporates arguments from its motion to strike.

Paper 97, 3–4. Finally, Patent Owner argues that it did not improperly incorporate arguments from its experts' declarations. *Id.* at 4–8. Petitioners reiterate that the Declaration Portions were improperly incorporated by reference into the Patent Owner Response. Paper 100, 4–5.

We deny Petitioners' motion to exclude the Declaration Portions. Motions to exclude evidence are used to exclude evidence that is not admissible. *See* Trial Practice Guide August Update 16–17. Petitioners do not argue that the Declaration Portions represent *inadmissible* evidence. *See* Paper 92, 2–6. Instead, Petitioners argue that the Declaration Portions represent improper argument, rather than evidence. *See id.* Petitioners fail to provide any basis under the Federal Rules of Evidence as to why the Declaration Portions are inadmissible. *See id.*; Trial Practice Guide August Update 16 ("A motion to exclude must explain why the evidence is not admissible (e.g., relevance or hearsay)"). Although Petitioners did object to Exhibits 2029 and 2638, these objections were directed to bases under the Federal Rules of Evidence not argued in their motion. *See* Paper 53, 1, 18. As such, Petitioners have not adequately explained why the Declaration Portions are inadmissible.

Petitioners appear to use the motion to exclude to reargue their motion to strike, this time trying to exclude the underlying declaration paragraphs, rather than the sections of the Patent Owner Response that allegedly incorporate by reference these paragraphs. *See* Paper 92; *see also* Paper 74 (providing our decision on Petitioners' motion to strike portions of the Patent Owner Response). We already addressed their motion to strike and explained how we would address any arguments improperly incorporated by

reference. Paper 74. As an alternative basis for denying the motion, in this Final Written Decision, we do not consider any of the alleged arguments in the Declaration Portions, as they are directed to secondary considerations, which we did not reach here.

2. Patent Owner's motion to exclude evidence

We now turn to Patent Owner's motion to exclude evidence. In this motion, Patent Owner first "objects to Exhibits 1665–1669 on the ground that they contain improper attorney argument in violation of the page/word count limits for replies." Paper 94, 1. Second, Patent Owner contends that Exhibit 1625, Dr. Beaman's declaration supporting the Reply, mischaracterizes certain earlier testimony of Patent Owner's expert and exceeds the proper scope of a reply. *Id.* at 3. Third, Patent Owner objects, provisionally, to Exhibit 1650, a declaration by Ryan Slate, because Patent Owner was not afforded an opportunity to depose the declarant. *Id.* at 4–5.[26] Fourth and finally, Patent Owner contends that Exhibits 1651–1654 and 1679 include hearsay, are irrelevant, are unfairly prejudicial, and lack foundation. *Id.* at 5. We address each of these categories in turn, below.

In opposition to this motion, Petitioners argue that Patent Owner's motion to exclude fails to follow our rules and procedures for a motion to exclude and that we should deny the motion, in its entirety, on that basis. Paper 98, 1–2 (quoting the Office Patent Trial Practice Guide, 77 Fed. Reg. at 48767). We decline to deny Patent Owner's motion on this basis. We

[26] Patent Owner does not address this evidence in reply to Petitioners' contention that this objection should be withdrawn. *See* Paper 98, 6; Paper 101. We do not address this exhibit further.

note that Petitioners' motion, which we addressed above, also fails to follow the procedure outlined in the Office Patent Trial Practice Guide. *See* Paper 92.

a. Exhibits 1665–1669

Patent Owner argues that Exhibits 1665 through 1669 improperly incorporate attorney argument into Petitioners' Reply. Paper 94, 1–3. These exhibits are directed to Petitioners' allegations that Patent Owner improperly incorporates arguments from declarations into its Patent Owner Response. *See id.*

In opposition, Petitioners argue that Patent Owner does not cite any evidentiary basis for excluding these exhibits and that a motion to exclude is not the proper procedure to challenge these exhibits. Paper 98, 9 (referencing Trial Practice Guide Update, August 2018). Patent Owner replies that, by filing Exhibits 1665–1669, Petitioners exceeded the word count for a Reply. Paper 101, 2.

We do not exclude Exhibits 1665–1669. Patent Owner provides no evidentiary basis why these exhibits constitute inadmissible evidence. To the extent that these exhibits do contain attorney argument, the proper remedy in such a situation is for us, when considering Petitioners' Reply arguments and evidence as a whole, to not consider any "arguments" found only in these exhibits and not adequately explained in the Reply. *See* Trial Practice Guide August Update 17–18; *cf.* Paper 74, 5 (addressing Petitioners' motion to strike).

b. Exhibit 1625

Patent Owner argues that Dr. Beaman's reply declaration mischaracterizes testimony from Patent Owner's declarant in support of its preliminary response (Dr. Durfee), based on characterizations of the testimony from Petitioners' counsel. Paper 94, 3–4. Patent Owner also argues that addressing Dr. Durfee's testimony, which was not relied on in the Patent Owner Response, is outside the scope of a proper reply. *Id.* at 3.

Petitioners argue that Patent Owner does not provide a basis under the Federal Rules of Evidence to exclude Dr. Beaman's testimony. Paper 98, 2. Petitioners add that a motion to exclude should not be directed to arguments or evidence that a party believes exceeds the proper scope of a reply. *Id.* Finally, Petitioners argue that the testimony sought to be excluded identifies inconsistencies between Patent Owner's declarants' testimony. *Id.* at 2–3.

In reply, Patent Owner argues that Dr. Beaman's testimony lacks foundation. Paper 101, 3–4.

We do not exclude this evidence. Patent Owner did not rely on a lack of foundation in its objection to Dr. Beaman's testimony or in the original motion to exclude. *See* Paper 83, 5 ("Team Worldwide objects to the Reply Declaration of Joseph J. Beaman, Jr. (Exhibit 1625), which mischaracterizes Exhibit 2201 and/or exceeds the proper scope of reply"); Paper 94, 3–4 (contending that portions of Exhibit 1625 "mischaracterize[] Patent Owner's early expert testimonial evidence (Exhibit 2201) and/or exceeds the proper scope of reply"). Accordingly, Patent Owner does not identify an evidentiary basis to exclude the evidence. Also, neither the motion nor the objection identifies, with particularity, those portions of Dr. Beaman's

declarations to be excluded, as Patent Owner's citations were presented as exemplary only. *See id.*

c. Exhibits 1651–1654 and 1679

Patent Owner argues that Exhibits 1651–1654 should be excluded as hearsay, are irrelevant, and lack proper foundation. Paper 94, 5. Patent Owner also argues that Exhibit 1679 does not lay the proper foundation for these exhibits. *Id.* at 8.

We deny Patent Owner's motion as to these exhibits as moot, as we do not rely on them in this Decision. *See* Trial Practice Guide August Update 17 ("In the Board's experience, consideration of the objected-to evidence is often unnecessary to resolve the patentability of the challenged claims, and the motion to exclude is moot.").

III. CONCLUSION

After considering the complete record, we find that the information in the Petition demonstrates, by a preponderance of the evidence, that the

Challenged Claims are unpatentable.[27] Also, we deny Petitioners' and Patent Owner's motions to exclude evidence.

IV. ORDER

After due consideration of the record before us, it is:

ORDERED that, claims 1, 7, and 11–14 are unpatentable under 35 U.S.C. § 102(b) as anticipated by Parienti;

FURTHER ORDERED that claims 1, 7, and 11–14 are unpatentable under 35 U.S.C. § 102(e) as anticipated by Chaffee; and

FURTHER ORDERED that because this is a Final Written Decision, parties to the proceeding seeking judicial review of the decision must comply with the notice and service requirements of 37 C.F.R. § 90.2.

---

[27] Should Patent Owner wish to pursue amendment of the Challenged Claims in a reissue or reexamination proceeding subsequent to the issuance of this decision, we draw Patent Owner's attention to the April 2019 *Notice Regarding Options for Amendments by Patent Owner Through Reissue or Reexamination During a Pending AIA Trial Proceeding*. *See* 84 Fed. Reg. 16654 (Apr. 22, 2019). If Patent Owner chooses to file a reissue application or a request for reexamination of the challenged patent, we remind Patent Owner of its continuing obligation to notify the Board of any such related matters in updated mandatory notices. *See* 37 C.F.R. § 42.8(a)(3), (b)(2).

PETITIONERS:

R. Trevor Carter
Andrew M. McCoy
FAEGRE BAKER DANIELS LLP
Trevor.Carter@faegrebd.com
Andrew.McCoy.PTAB@faegrebd.com
(Counsel for Intex)

Hersh H. Mehta
Brent A. Hawkins
Krista Vink Venegas (pro hac vice)
James J. Kritsas
MORGAN, LEWIS & BOCKIUS LLP
hersh.mehta@morganlewis.com
brent.hawkins@morganlewis.com
krista.venegas@morganlewis.com
james.kritsas@morganlewis.com
Bestway-Intex-PTAB@morganlewis.com
(Counsel for Bestway)

PATENT OWNER:

Timothy E. Bianchi
Thomas C. Reynolds
Domenico Ippolito
SCHWEGMAN, LUNDBERG & WOESSNER, P.A.
tbianchi@slwip.com
treynolds@slwip.com
dippolito@slwip.com
SLW-PTAB@slwip.com

Ronald Wielkopolski
Amadou K. Diaw
Robert M. Harkins
RUYAKCHERIAN LLP
ronw@ruyakcherian.com
amadoukd@ruyakcherian.com
bobh@ruyakcherian.com
TWW_Intex_IPRs@ruyakcherian.com