Trials@uspto.gov
571-272-7822

Paper No. 41
Date Entered: November 5, 2019

UNITED STATES PATENT AND TRADEMARK OFFICE

BEFORE THE PATENT TRIAL AND APPEAL BOARD

PACKERS PLUS ENERGY SERVICES INC. and PACKERS PLUS ENERGY SERVICES (USA) INC.
Petitioners,

v.

BAKER HUGHES OILFIELD OPERATIONS, LLC
Patent Owner.

IPR2018-01030
Patent 8,365,829 B2

Before: MITCHELL G. WEATHERLY, BEVERLY M. BUNTING, and BARBARA A. PARVIS, *Administrative Patent Judges*.

PARVIS, *Administrative Patent Judge*.

JUDGMENT
Final Written Decision
Determining All Challenged Claims Unpatentable
Denying Patent Owner's Motion to Amend
35 U.S.C. § 318(a)

I. INTRODUCTION

Packers Plus Energy Services Inc. and Packers Plus Energy Services (USA) Inc., ("Petitioner") filed a Petition pursuant to 35 U.S.C. §§ 311–319 to institute an *inter partes* review of claims 1, 5, 6, and 10–13 ("the challenged claims") of U.S. Patent No. 8,365,829 B2 ("the '829 Patent"). Paper 1 ("Pet."). Baker Hughes Oilfield Operations, LLC ("Patent Owner") filed a Preliminary Response. Paper 8 ("Prelim. Resp."). Upon consideration of the parties' contentions and supporting evidence, we instituted an *inter partes* review pursuant to 35 U.S.C. § 314, as to the challenged claims of the '829 Patent. Paper 9 ("Inst. Dec.").

After institution, Patent Owner filed a Patent Owner Response (Paper 19, "PO Resp."); Petitioner filed a Reply (Paper 22, "Pet. Reply"); and Patent Owner filed a Sur-Reply (Paper 27, "PO Sur-Reply"). Also, Patent Owner filed a Contingent Motion to Amend (Paper 20, "Mot. to Amend"), which has been fully briefed. *See infra* § III.F. A transcript of the hearing held on August 15, 2019 has been entered into the record as Paper 36 ("Tr."). Following the hearing, the parties were authorized and filed additional briefing regarding claim term interpretation. *See infra* § III.B.2.

This Final Written Decision is entered pursuant to 35 U.S.C. § 318(a). For the reasons that follow, we determine that Petitioner has demonstrated by a preponderance of evidence that the challenged claims of the '829 Patent are unpatentable. Additionally, we deny Patent Owner's Motion to Amend.

II. BACKGROUND

A. Real Party in Interest

Petitioner names Packers Plus Energy Services Inc. and Packers Plus Energy Services (USA) Inc. as the real parties-in-interest. Pet. 3. Regarding real parties-in-interest, Patent Owner identifies Baker Hughes Oilfield Operations, LLC; Baker Hughes, a GE Company, LLC; Baker Hughes, a GE Company ("BHGE"); and General Electric Company. Paper 5, 2–3.

B. Related Matters

As required by 37 C.F.R. § 42.8(b)(2), each party identifies judicial and administrative matters that would affect, or be affected by, a decision in this proceeding. In particular, the parties inform us that the '829 Patent is asserted in *Baker Hughes Oilfield Operations LLC v. Packers Plus Energy Services Inc.*, Case No. 4:17-cv-01422 (S.D. Tex.) (filed May 8, 2017) ("related district court lawsuit"). Pet. 3; Paper 5, 3.

C. The '829 Patent

The '829 Patent is directed to a pluggable seat and actuating system. Ex. 1001, at code (54), 1:32, 1:45. The '829 Patent provides the following background:

> In industries concerned with earth formation boreholes, such as hydrocarbon recovery and gas sequestration, for example, it is not uncommon for various operations to utilize a temporary or permanent plugging device. Sometimes it is desirable to plug the borehole at a specific location and then to later remove the plug. Systems employing droppable members, such as balls, for example, are typically used for just such a purpose. The ball is dropped to a ball seat positioned at the desired location within the borehole thereby creating the desired plug.

Id. at 1:6–15. The ’829 Patent further describes to facilitate pumping, “balls made of relatively low density materials” are used, but those balls “are susceptible to extrusion through a ball seat due to deformation of the ball under high loads.” *Id.* at 1:17–23. The ’829 Patent describes that devices and systems that decrease potential for extrusion of the ball “would be well received in the art.” *Id.* at 1:24–28.

Figure 1 of the ’829 Patent is reproduced below.

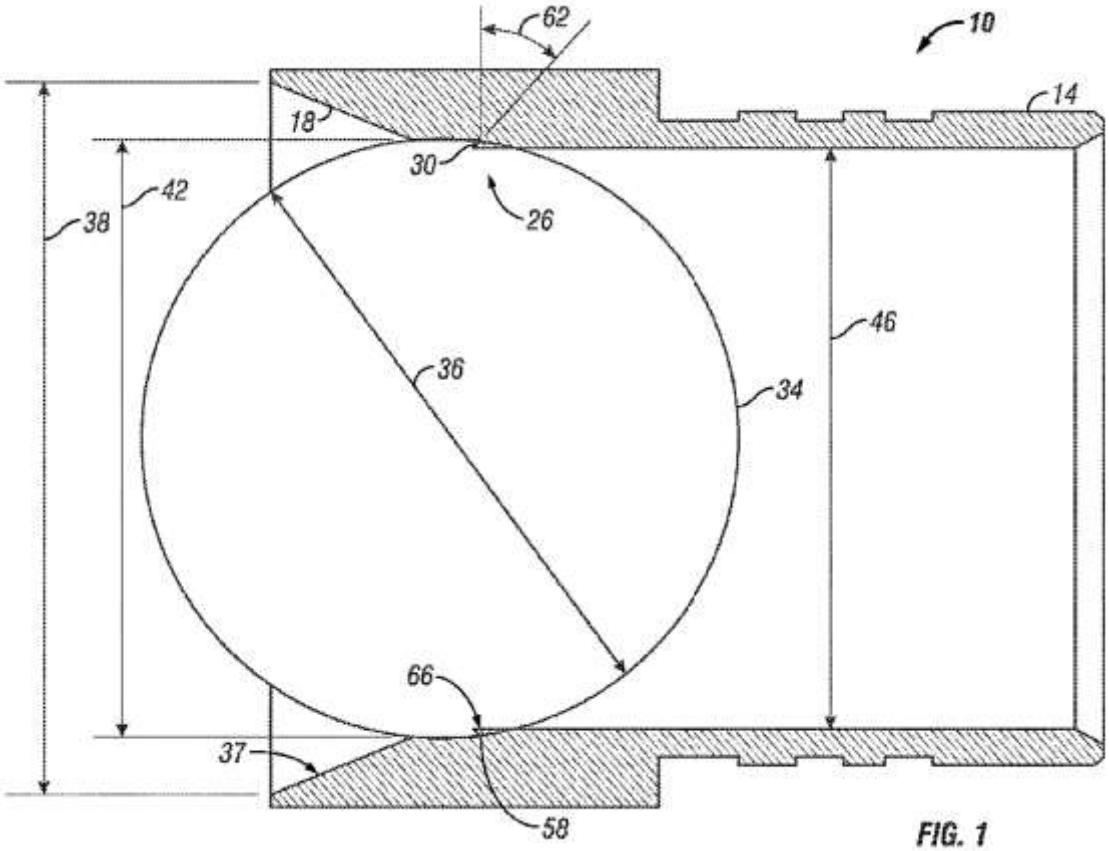

Figure 1 of the ’829 Patent, above, illustrates tubular runnable member seat 10 including body 14 having first portion 18 and second portion 26. *Id.* at 2:14–17. Seat 10 is receptive to and pluggable by runnable member 34, which is a ball having ball diameter 36. *Id.* at 2:17–19. Frustoconical surface 37 is defined by diameters 38 and 42 of

body 14. *Id.* at 2:21–22. Profile 30 of second portion 26 is illustrated as a tooth defined by frustoconical surface 58 between diameter 46 and diameter 42. *Id.* at 2:42–47. To preclude the ball from extruding past seat 10, the ’829 patent describes how diameter 46 may be reduced. *Id.* at 2:30–35. “Additionally, the smaller the diameter 46 is[,] the fewer the total number of seats, of smaller diameter, that can be positioned along a tubular, such as a drill string.” *Id.* at 2:38–41.

D. Illustrative Claim

Petitioner challenges claims 1, 5, 6, and 10–13 of the ’829 Patent. Pet. 1. Claims 1 and 11 are independent claims. Claims 5, 6, 10, 12, and 13 depend directly from claim 1 or 11. Independent claim 1, reproduced below, is illustrative of the claimed subject matter:

> 1. [a] A pluggable seat, comprising:
>
> [b] a first portion, positionable within a tubular, being receptive to a runnable member seatable thereagainst at a frustoconical surface thereof;
>
> [c] a second portion positioned downstream of the first portion, downstream being defined as a direction that the runnable member is moved into seating engagement with the pluggable seat, having a radial dimension smaller than a smallest radial dimension of the first portion; and
>
> [d] a profile disposed at the second portion configured to increase resistance to extrusion of a runnable member past the pluggable seat in comparison to the same pluggable seat without the profile.

Ex. 1001, 3:55–4:10.[1]

E. Evidence Relied Upon

Petitioner relies on the following references:

U.S. Patent Publication No. 2009/0044955 A1, filed August 13, 2007, published February 19, 2009 (Ex. 1002, "King");

U.S. Patent No. 4,760,884, filed September 16, 1986, issued August 2, 1988 (Ex. 1003, "Haugen");

U.S. Patent Publication No. 2009/0044946 A1, filed August 13, 2007, published February 19, 2009 (Ex. 1004, "Schasteen");

U.S. Patent Publication No. 2008/0236842 A1, filed February 14, 2008, published October 2, 2008 (Ex. 1005, "Bhavsar");

U.S. Patent No. 6,907,936 B2, filed November 19, 2002, issued June 21, 2005 (Ex. 1008, "Fehr");

U.S. Patent Publication No. 2010/0206553 A1, filed August 18, 2009, published August 19, 2010 (Ex. 1010, "Bailey");

U.S. Patent Publication No. 2009/0152013 A1, filed December 14, 2007, published June 18, 2009 (Ex. 1012, "Buske");

U.S. Patent No. 4,099,563, filed March 31, 1977, issued July 11, 1978 (Ex. 1014, "Hutchison"); and

---

[1] The elements in claim 1 are referred to by Petitioner as "1[b]" (*see, e.g.*, Pet. 29), "1[c]" (*see, e.g.*, *id.* at 31), and "1[d]" (*see, e.g.*, *id.* at 33), respectively. We use Petitioner's designations to reference those elements herein.

C.H. Ahlen and T. Wenn, *Testing and Evaluation of Materials for Metal Seated Ball Valves*, Proc. Third Int'l Offshore and Polar Engineering Conference (1993) (Ex. 1009, "Ahlen").

Petitioner also relies on the Declaration of Mr. Manuel E. Gonzalez (Ex. 1025). Patent Owner relies on the Declaration of Mr. Watson (Ex. 2010).

F. Asserted Grounds

Petitioner asserts the grounds below (Pet. 6–9):

Claims Challenged	**35 U.S.C. §**	**Reference(s)/Basis**
1, 5, 6, 11, 12	§ 102	King (first embodiment)[2]
1, 5, 6, 11, 12	§ 103	King (first embodiment), Haugen
1, 5, 6, 10–13	§ 102	King (second embodiment)
1, 5, 6, 10–13	§ 103	King (second embodiment), Haugen
1, 5, 6, 11, 12	§ 103	Schasteen, Haugen
1, 5, 6, 10, 11	§ 102	Bhavsar
1, 5, 6, 10–13	§ 103	Fehr, Ahlen, Bailey, Buske
1, 5, 6, 10–13	§ 103	Fehr, Ahlen, Buske
1, 5, 6, 10, 11, 13	§ 103	Hutchison, Ahlen, Buske

[2] Petitioner points to two embodiments of King, including an embodiment "based on Figs. 1 and 2," which we refer to herein as the "first embodiment" and an embodiment "based on Figs. 5 and 6," which we refer to herein as the "second embodiment." Pet. 6–7.

Claims Challenged	35 U.S.C. §	Reference(s)/Basis
1, 5, 6, 10, 11, 13	§ 103	Hutchison, Ahlen, Bailey, Buske

III. DISCUSSION

A. Level of Ordinary Skill

In determining the level of ordinary skill in the art, various factors may be considered, including the "type of problems encountered in the art; prior art solutions to those problems; rapidity with which innovations are made; sophistication of the technology; and educational level of active workers in the field." *In re GPAC Inc.*, 57 F.3d 1573, 1579 (Fed. Cir. 1995) (citation omitted). Petitioner contends, relying on the testimony of Mr. Gonzalez, that a person of ordinary skill in the art would have had a bachelor's degree in petroleum or mechanical engineering, or other science or technical degree applicable in the oil and gas industry, and at least three years of experience in drilling and completions of oil and gas wells, including experience in well fracturing simulations. Pet. 23 (citing Ex. 1025 ¶¶ 41–43). Petitioner further contends that the artisan's level of education necessary may increase or decrease depending on years of experience, and conversely the years of experience may increase or decrease depending on level of education. *Id.*

Patent Owner does not dispute Petitioner's proposed level of ordinary skill or propose an alternative. PO Resp. 4. On the record before us, we are persuaded to adopt Mr. Gonzalez's assessment of a person with ordinary skill in the art because it is consistent with the problems and solutions in the

prior art of record. We further find that the prior art of record in the instant proceeding reflects the appropriate level of ordinary skill in the art. *See Okajima v. Bourdeau*, 261 F.3d 1350, 1354–55 (Fed. Cir. 2001) ("the prior art itself reflects an appropriate level" of ordinary skill in the art).

B. Claim Construction

1. Principles of Law Relating to Claim Construction

In this *inter partes* review, we construe claim terms according to their broadest reasonable construction in light of the specification of the patent in which they appear. 37 C.F.R. § 42.100(b) (2017).[3]

2. Background

In the Petition, Petitioner provides contentions relating to claim construction for only one term, i.e., the term "profile." Pet. 21–22. In our Decision to Institute, we determined that we did not need to construe the term "profile" expressly because Patent Owner did not dispute Petitioner's showing. Inst. Dec. 9.

We, however, addressed Patent Owner's implied construction for "portion," which we did not adopt. *Id.* at 10–12. Now, in view of the entire record, we adopt our analysis from our Decision to Institute for purposes of this Final Written Decision. Because we find that the ordinary and

---

[3] The claim construction standard to be employed in an *inter partes* review changed. *See* Changes to the Claim Construction Standard for Interpreting Claims in Trial Proceedings Before the Patent Trial and Appeal Board, 83 Fed. Reg. 51,340 (Oct. 11, 2018) (amending 37 C.F.R. § 42.100(b) effective November 13, 2018). At the time of the filing of the Petition in this proceeding, May 10, 2018, however, the applicable claim construction standard was set forth in 37 C.F.R. § 42.100(b) (2017).

customary meaning of "portion" is "part of," in the context of claim 1, we find that the claimed "portion" is a part of the seat.

In its Patent Owner Response, Patent Owner provides contentions for the term "seat" recited in claims 1 and 11. PO Resp. 7–13. As Patent Owner correctly points out (PO Resp. 16), the term "seat" is recited in the preamble and body of claim 1 and it is recited in the body of claim 11. Ex. 1001, 3:55, 4:9, 4:36. Patent Owner also provides responsive contentions for the term "profile" and disputes the construction in the Petition. *Id.* at 14. Patent Owner further provides contentions regarding the broadest reasonable interpretation of "pluggable." *Id.* at 16.

In its Reply, Petitioner asserts that Patent Owner's construction of "seat" is "**[u]nreasonably [l]imited**." Pet. Reply 1. Petitioner maintains its positions regarding the term "profile" and does not disagree with Patent Owner's construction of "pluggable." Pet. Reply 5–6.

Following the hearing in the instant proceeding and with respect to the meaning of "seat," we requested further briefing on whether "body" simply means "structure," such that a "body" is not limited to a single-piece structure, but also encompasses structures having more than one piece. Paper 35. As authorized, the parties filed the requested briefing.[4]

Based on the full record now before us, we adopt Patent Owner's undisputed construction of "pluggable," i.e., "able to be plugged" for the

---

[4] In particular, Patent Owner filed Patent Owner's Opening Brief Pursuant to the Order dated September 3, 2019 (Paper 37, "PO Op. Br."), and Patent Owner's Reply Brief Pursuant to the Order dated September 3, 2019 (Paper 39, "PO Resp. Br."). Petitioner filed Petitioners' Opening Brief Pursuant to Order (Paper 38, Pet. Op. Br.") and Petitioners' Responsive Brief Pursuant to Order (Paper 40, "Pet. Resp. Br.").

reasons given by Patent Owner. PO Resp. 16. Below we discuss the parties' contentions regarding the terms "seat" and "profile," recited in independent claims 1 and 11. We further discuss "disposed at" recited, for example, in "a profile *disposed at* a second portion." As to the remaining claim terms, we determine no further construction is needed to resolve the parties' controversies. *See Nidec Motor Corp. v. Zhongshan Broad Ocean Motor Co. Ltd.*, 868 F.3d 1013, 1017 (Fed. Cir. 2017), *cert. denied*, 138 S. Ct. 1695 (April 30, 2018) (noting that "we need only construe terms 'that are in controversy, and only to the extent necessary to resolve the controversy'") (citing *Vivid Techs., Inc. v. Am. Sci. & Eng'g, Inc.*, 200 F.3d 795, 803 (Fed. Cir. 1999)).

3. "seat"

In its Patent Owner Response, Patent Owner contends the broadest reasonable interpretation of "seat" is "a body or portion of a body that receives a runnable member (e.g., a ball) to form a plug." PO Resp. 7. In its Reply, Petitioner disputes Patent Owner's construction and asserts that "'seat' requires no particular construction." Pet. Reply 4. For the reasons given below, we determine an express construction is needed for the term "seat" to resolve a dispute between the parties in this proceeding.

The term "seat" is recited in the preamble and body of claim 1, and it is recited in the body of claim 11. Ex. 1001, 3:55, 4:9, 4:36. Neither party contends that the term "seat" does not limit the claim. *See generally* Pet.; PO Resp. "When limitations in the body of the claim rely upon and derive antecedent basis from the preamble, then the preamble may act as a

necessary component of the claimed invention." *Eaton Corp. v. Rockwell Int'l Corp.*, 323 F.3d 1332, 1339 (Fed. Cir. 2003).

Petitioner agrees with the functional limitation in the construction proposed by Patent Owner, i.e., that the seat "receives a runnable member (e.g., a ball) to form a plug" (PO Resp. 7). Tr. 10:15–26.[5] The parties' dispute centers on "a body or a portion of a body" in Patent Owner's proposed construction (PO Resp. 7) and, more specifically, whether "body," as used within Patent Owner's proposed construction, is limited to one piece.

As we noted in our Order (Paper 35), the word "body" is used as another term for structure. *See* ROBERT C. FABER, LANDIS ON MECHANICS OF PATENT CLAIM DRAFTING App. C-6 (4th ed. 1996) ("*Landis*") (grouping the term "body" as structure). Similar words have not been confined to mean one piece or a single-piece construction. *In re Hotte*, 475 F.2d 644, 647 (CCPA 1973) ("As indicated by the board, 'integral' is sufficiently broad to embrace constructions united by such means as fastening and welding" (citing *Henderson v. Grable*, 339 F.2d 465 (CCPA 1964))); *3M Innovative Props. Co. v. EnvisionWare, Inc.*, No. 09-1594, 2010 WL 5067449 at *5 (D. Minn. Dec. 6, 2010) (construing the term "integrated unit" to mean "a unit wherein the recited component parts are or can be

---

[5] We note that Patent Owner asserts that "[t]he term 'seat' is commonly used within the industry to refer to the body or portion of the body *against which* the ball seats to form a plug." PO Resp. 9. The inclusion of "against which" is narrower than Patent Owner's proposed construction (*id.* at 7) and we decline to limit Patent Owner's proposed construction in that manner for the same reasons that we determine that "profile" is not limited to "a surface element that contacts a runnable member such as a ball." *See supra* § III.B.4.

combined into a unified structure"); *cf. Advanced Cardiovascular Sys., Inc. v. Scimed Life Sys.*, Inc. 887 F.2d 1070, 1072–73 (Fed. Cir. 1989) ("[N]othing yet made of record restricts the terms to mean "of one piece").[6]

In applying a broadest reasonable construction, claim terms generally are given their ordinary and customary meaning, as would be understood by one of ordinary skill in the art in the context of the entire disclosure. *See In re Translogic Tech., Inc.*, 504 F.3d 1249, 1257 (Fed. Cir. 2007). Additionally, we must be careful not to read a particular embodiment appearing in the written description into the claim if the claim language is broader than the embodiment. *See In re Van Geuns*, 988 F.2d 1181, 1184 (Fed. Cir. 1993).

Starting with the language of the claims, we note that the term "pluggable seat" is recited in claim 1 as comprising "a profile." Ex. 1001, 3:55–4:10. Patent Owner does not dispute that "seat" recited in both claims 1 and 11 has the same meaning and comprises the "profile." Tr. 42:24–43:11, 45:15–25.

Turning to the '829 Patent Specification, alternative embodiments of the "profile" are described in which the profile is attached to the balance of the seat. Ex. 1001, 3:24–30. In particular, the '829 Patent Specification describes:

> [r]eferring to FIG. 6, a magnified perspective view of the area of circle "A" is depicted showing another embodiment of the profile 130 having a profile material 162 other than a material 166 from which the balance of the seat 126 is made is illustrated. The profile material 162 can be attached to the material 166 by

---

[6] Patent Owner uses "integral" and "part of a body" interchangeably. Tr. 47:18–21.

> any means available, including, welding, soldering, brazing, plating, coating and painting for example.

Id. at 3:24–30.

Patent Owner points to the ’829 Patent Specification as support for its proposed claim construction. PO Resp. 7–9 (citing Ex. 1001, 2:14–20, 2:55–60, Figs. 1, 2; Ex. 2010 ¶¶ 28–33); *see also* PO Sur-Reply 6–7 (citing Ex. 2010 ¶¶ 29–33) (relying on the same testimony relating to the same portions of the ’829 Patent Specification). Mr. Watson’s testimony refers to the same portions of the ’829 Patent Specification relied on by Patent Owner and not the embodiments described with respect to Figure 6, and thus is not convincing. Ex. 2010 ¶¶ 28–33. Mr. Watson also testifies that “[t]he term ‘seat’ is commonly used within the industry to refer to a body or portion of a body that receives a runnable member to form a plug.” *Id.* ¶¶ 34–38. Mr. Watson, however, does not testify regarding the word “body” or whether the body is limited to one piece. *Id.* ¶¶ 28–38.

Patent Owner asserts “[n]othing in the specification describes or contemplates the seat as encompassing multiple distinct pieces or components.” PO Op. Br. 2. Patent Owner, however, asserts it “hasn’t sought to limit the term ‘seat’ to a single body made of one material” and “its construction in fact includes the Fig. 6 embodiment.” PO Resp. Br. 1–2. Regarding that embodiment in which the profile of a different material is attached to the material making up the balance of the seat, Patent Owner asserts:

> [n]otably, none of the listed processes results in a structure having multiple pieces, parts, or components. Instead, *the very purpose of each of the listed methods is to produce a single piece*, either by (i) joining two distinct objects to form a single object

> (welding, soldering, brazing) or (ii) depositing material to form a single object having a surface layer (plating, coating, painting).

Id. at 2–3.

Patent Owner, however, acknowledges that the Specification describes "joining *two distinct objects*" to form the body. *Id.* at 2 (emphasis added). Patent Owner focuses on the '829 Patent Specification's description of "joining" and asserts that "body" must be a structure resulting from the particular methods of joining described in the '829 Patent Specification, i.e., welding, soldering, or brazing. *Id.* at 2–3. In particular, Patent Owner asserts:

> although the 829 patent uses the phrasing "by any means available, including, [the above-identified listing] for example," the rule of *ejusdem generis* requires that the general description "any means available" be limited to means similar to those in the provided listing (all of which produce a single piece). *See, e.g.*, *Gilead Scis., Inc. v. Lee*, 778 F.3d 1341, 1347 (Fed. Cir. 2015); *Int'l Bus. Machines Corp. v. Iancu*, 759 F. App'x 1002, 1007–08 (Fed. Cir. 2019) (applying rule to specification during claim construction); *see also* 35 U.S.C.112 (pre-AIA), paragraph 6 (reciting limits for means plus function language).

PO Op. Br. 3.

Patent Owner asserts that a seat having "a structure having its upper and lower ends screwed into a string of conduit" differs from the claimed "seat." PO Resp. 26–27. As already noted, terms similar to "body" have been construed to encompass portions attached or affixed by "fastening and welding." *Hotte*, 475 F.2d at 647 (CCPA 1973) ("As indicated by the board, 'integral' is sufficiently broad to embrace constructions united by such means as fastening and welding" (citing *Henderson v. Grable*, 339 F.2d 465 (CCPA 1964))). We determine that the rule of *ejusdem generis* does not require limiting "body" so as to exclude fastening. *Gilead Scis., Inc. v. Lee*,

778 F.3d 1341, 1347–48 (Fed. Cir. 2015) ("We typically use *ejusdem generis* to ensure that a general word will not render specific words meaningless." (citing *CSX Transp., Inc., v. Ala. Dep't of Revenue*, 562 U.S. 277, 131 S.Ct. 1101, 1113 (2011))); *see also Archer Daniels Midland Co. v. United States*, 561 F.3d 1308, 1313 (Fed. Cir. 2009) (holding that the "rule of *ejusdem generis* . . . limits the additional uses included by the general phrase 'etc.' to others of the types listed").

Patent Owner asserts *Landis* does not support using the word "body" "to refer to a structure made up of multiple distinct pieces or components." PO Op. Br. 3. Patent Owner contends "Landis teaches that 'body' is a word (like 'blade' or 'handle') that can be used to describe a particular structure." *Id.* at 5. Consistent with Patent Owner's contentions, *Landis* lists the terms "blade" and "handle" under the heading "*Structure*" along with the term "body." Ex. 3002. The function performed by "body" is not disputed. The dispute between the parties pertains to whether "body" encompasses structures having pieces joined by fastening, rather than welding.

Patent Owner does not rely on the prosecution history for construction of any terms. Tr. 48:6–12. Based on the complete record now before us, we disagree with Patent Owner's position that the intrinsic evidence, including the '829 Patent Specification, requires limiting the term "body" to only the portions containing parts joined in one of the three ways of joining parts listed, which excludes fastening. We, instead, determine that "body" is used as another term for a structure, and encompasses a structure joined by attaching two distinct objects or pieces by welding, soldering, brazing, or fastening. With the aforementioned understanding of the meaning of "body," we determine that the broadest reasonable interpretation of "seat" is

"a body or portion of a body that receives a runnable member (e.g., a ball) to form a plug."

4. "profile" and "disposed at"

Petitioner avers "'profile' should be construed to mean a distinct feature disposed at a section (not the entirety) of the surface of the claimed 'second portion.'" Pet. 22 (citing Ex. 1025 ¶ 48). Petitioner additionally contends that Patent Owner should be held to a claim scope it applied in its infringement contentions served in the related district court lawsuit. *Id.* at 23. According to Petitioner, in that related district court lawsuit, "Baker Hughes' position is that an anti-erosion coating along the inner surface of the ball seat—with no limitation as to whether that coating can span across more than the 'second portion' of the ball seat—meets the 'profile' limitation." *Id.* at 23–24 (citing Ex. 1017, 17, 20, 27, 45). We note with respect to the alleged position in the related lawsuit, Petitioner's declarant, Mr. Gonzalez, testifies "I disagree with Baker Hughes' assertion that the '829 Patent's claimed 'profile' covers the use of coatings disposed along a surface of the 'second portion.'" Ex. 1003 ¶ 49.

Patent Owner contends that the broadest reasonable interpretation of "profile" is "a surface element that contacts a runnable member such as a ball." PO Resp. 14. As support, Patent Owner points to the '829 Patent Specification asserting that "[t]he 829 patent discloses a variety of embodiments for a profile, each of which is a surface element that contacts a runnable ball." *Id.* (citing Ex. 1001, 2:44–54 (tooth), 2:66–3:8 (serrations), 3:9–18 (knurl), 3:19–23 (buttresses), 3:24–32 (surface material)).

Petitioner responds:

> [t]here is no requirement in the '829 Patent claims that the "profile" has to contact the runnable member or ball—the claimed "profile" is only required to be "configured to increase resistance to extrusion of the runnable member" (claim 1) or "configured to require greater pressure to extrude the ball therepast" (claim 11).

Pet. Reply 5.

We start with whether "profile" is limited to a feature or element that makes contact with the ball. We agree with Petitioner that "profile" is not limited to features that make contact. Claim 1 recites "a profile disposed at the second portion *configured to increase resistance to extrusion of a runnable member past the pluggable seat in comparison to the same pluggable seat without the profile*." Ex. 1001, 4:7–10 (emphasis added). Claim 11 recites

> a profile disposed at a second portion of the seat having a second diameter that is smaller than the first diameter and positioned downstream of the first portion, downstream being defined as a direction that the ball is moved into seating engagement with the seat, the profile being *configured to require greater pressure required to extrude the ball past the first portion*.

Ex. 1001, 4:41–47.

Consistent with Petitioner's proposed construction (Pet. 22; Ex. 1025 ¶ 48), and contrary to Patent Owner's contentions and the testimony of Mr. Watson (*see, e.g.*, PO Resp. 14–16; Ex. 2010 ¶ 45), claims 1 and 11 recite that the "profile" is configured "to increase resistance" and "to require greater pressure," respectively. Ex. 1001, 4:7–10, 4:41–47. Claims 1 and 11 also include recitations relating to seating, such as "seatable thereagainst" and "seating engagement," but these recitations pertain to "a first portion" and defining the position of "a second

portion," i.e., "downstream," respectively. *Id.* at 3:57, 4:3, 4:44. No similar terms are recited with respect to "profile." *Id.* at 3:55–4:10, 4:33–47.

Furthermore, each of claims 10 and 13, which depend directly from claims 1 and 11, respectively, recites further limitations relating to friction. In particular, claim 1 recites that the profile includes material "configured to increase friction" and claim 11 recites that the profile includes material "that has a greater coefficient of friction." *Id.* at 4:30–32, 4:50–53. "[T]he presence of a dependent claim that adds a particular limitation raises a presumption that the limitation in question is not found in the independent claim." *Liebel-Flarsheim Co. v. Medrad, Inc.*, 358 F.3d 898, 910 (Fed. Cir. 2004). Our determination is based on the recitations of claims 1 and 11, without consideration of the dependent claims. However, we note as an additional reason that based on the complete record before us, the limitations in claims 10 and 13 further support that "profile" does not have the overly narrow meaning proposed by Patent Owner.[7]

Further reason to adopt Petitioner's proposed construction is that the construction is consistent with the '829 Patent Specification. In addition to the embodiments set forth by Patent Owner relating to details formed into a surface (PO Resp. 14 (citing Ex. 1001, 2:44–54, 2:66–3:8, 3:9–18, 3:19–23, 3:24–32)), the '829 Patent Specification also describes:

> [a]lthough the profiles 130 illustrated herein include a plurality of symmetrical details formed into the frustoconical surface 142, it should be noted that other embodiments could include any

---

[7] We note that even under Patent Owner's proposed construction of "profile," we are persuaded that the second embodiment of King anticipates claims 1 and 11 for the same reasons discussed with respect to claims 10 and 13. *See infra* § III.C.7.

> detail that increases frictional engagement between the ball 118 and the profile 130. Additionally, the profile 130 need not include the frustoconical surface 142, but any detail th[at] *increases resistance to extrudable passage of the ball 118 by the seat 126.*

Ex. 1001, 3:12–18. Consistent with the broader recitations in claims 1 and 11, the ’829 Patent describes “profile” as “any detail” that “increases resistance to extrudable passage of the ball 118 by the seat 126” encompassing elements that do not contact a runnable member. *Id.* Petitioner’s proposed construction that “profile” means “a distinct feature disposed at a section (not the entirety) of the surface of the claimed ‘second portion’” (Pet. 22; Ex. 1025 ¶ 48) is consistent with the embodiments identified by Patent Owner, as well as the broader embodiments set forth above. Ex. 1001, 2:44–54, 2:66–3:8, 3:9–18, 3:19–23, 3:24–32.

Patent Owner also asserts that its proposed construction is consistent with the ordinary meaning of “profile” in the art. PO Resp. 14 (citing Ex. 2010 ¶ 46). Mr. Watson relies on the same embodiments of the ’829 Patent Specification relied upon by Patent Owner and discussed above, as well as a single brochure setting forth one example of a profile that makes contact with a runnable member. Ex. 2010 ¶¶ 45–46 (citing, *e.g.*, Ex. 2007). We determine that the extrinsic evidence relied upon by Mr. Watson and his testimony do not overcome Petitioner’s arguments because Patent Owner’s evidence is not consistent with the intrinsic evidence, including the language of the claims and the ’829 Patent Specification.

Patent Owner further asserts its position is consistent with Mr. Gonzalez’s deposition testimony that Petitioner’s proposed construction is not consistent with the understanding of a person having ordinary skill in the art. *Id.* at 14–15 (citing Ex. 2005, 49:4–50:5). Specifically,

Mr. Gonzalez testifies that a profile "could be several pieces" and a person having ordinary skill in the art would have considered "how it acts upon the apparatus and the forces" involved. Ex. 2005, 49:4–50:5. Mr. Gonzalez's testimony supports Petitioner's position, and is contrary to Patent Owner's position because acting upon an apparatus does not require contacting that apparatus.

Regarding Petitioner's broader construction of "profile" pertaining to the related lawsuit, based on the complete record before us, we determine that Petitioner's alternative contentions are deficient for reasons other than not teaching the claimed "profile." Nonetheless, we decline to adopt a construction that eviscerates the express claim recitations that the "profile" is configured "to increase resistance" and "to require greater pressure" (Ex. 1001, 4:7–10, 4:41–47), respectively, even if such construction reflects a party's position regarding the term "profile" in the related lawsuit.

We now turn to the parties' contentions regarding "disposed at." Claims 1 and 11 recite "a profile *disposed at* the second portion." *Id.* at 4:7, 4:41. Claim 11 recites "an actuator *disposed at* the tubular" and "a seat *disposed at* the actuator." *Id.* at 4:36–37 (emphases added). Petitioner proposes that "profile" means "a distinct feature disposed at a section (not the entirety) of the surface of the claimed 'second portion.'" Pet. 22; Ex. 1025 ¶ 48. Patent Owner proposes that "profile" means a "surface element," which is consistent with Patent Owner's pointing to details formed into a surface. PO Resp. 14 (citing Ex. 1001, 2:44–54, 2:66–3:8, 3:9–18, 3:19–23, 3:24–32). Consistent with both parties' contentions and proposed constructions, "disposed at" encompasses features or elements that are part

of a single structure, such as the "profile" formed on the surface of the "second portion."

That "disposed at" encompasses features or elements that are part of a single structure is further consistent with "a seat disposed at the actuator" (*id.* at 4:36–37) as understood in light of the '829 Patent Specification. Figure 2 of the '829 Patent illustrates that actuator 122 is part of a structure that also encompasses seat 126. Ex. 1002, Fig. 2. Additionally, the '829 Patent describes that "seat 126 has a minimum diameter 128," which is shown with respect to a portion of that structure that either is or is close to actuator 122. Figure 2 of the '829 Patent is reproduced below.[8]

[8] Patent Owner's proposed amendment further supports that "disposed at" encompasses features or elements that are part of a single structure. *See infra* § III.F.2.

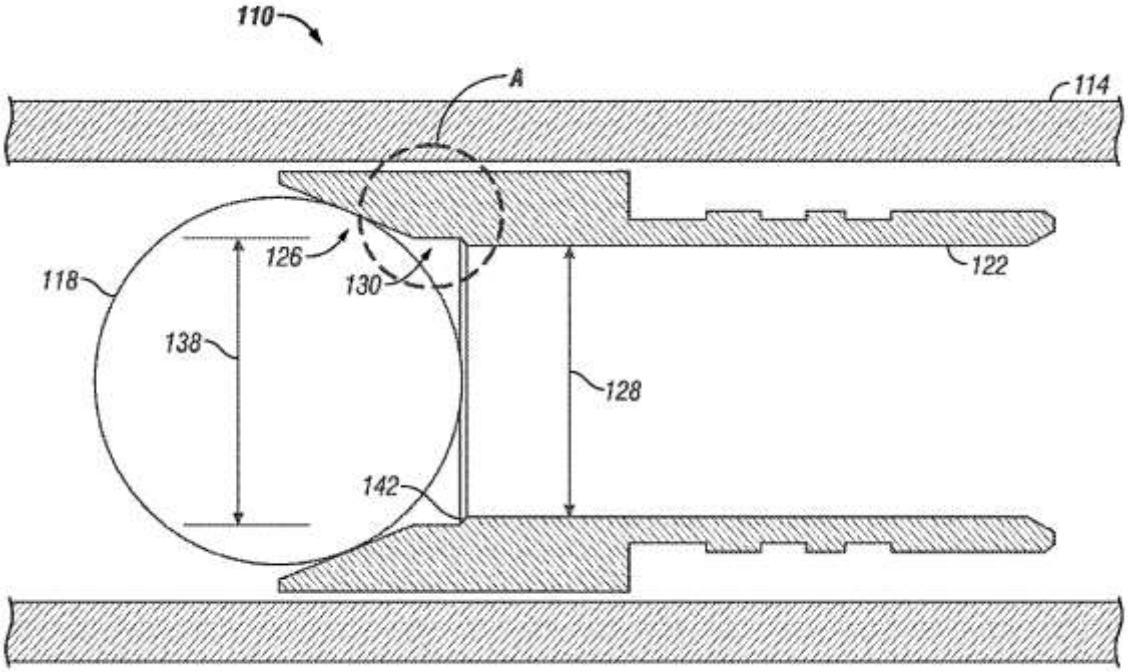

FIG. 2

Figure 2 of the ’829 Patent depicts a cross sectional view of tubular actuating system 110 including tubular 114, ball 118, actuator 122, seat 126, a minimum diameter 128 of seat 126. Ex. 1001, 1:61–62, 2:56–61.

Consistent with other embodiments, however, “disposed at” more broadly encompasses features or elements that are connected or nearby. For example, with respect to “an actuator disposed at the tubular” recited in claim 11, Figure 2 of the ’829 Patent shows actuator 122 within tubular 114. *Id.* at Fig. 2. Additionally, with respect to “profile,” the ’829 Patent describes alternate embodiments including “any detail th[at] *increases resistance to extrudable passage of the ball 118 by the seat 126.*” *Id.* at 3:12–18.

For the reasons given, we adopt Petitioner’s proposed construction and determine that “profile” means “a distinct feature disposed at a section

of the surface of the 'second portion.'" Pet. 22 (citing Ex. 1025 ¶ 48). We determine that "disposed at" encompasses features or elements that are part of a single structure as well as features or elements that are connected or nearby. We determine "disposed at" has the same meeting in each recitation, e.g., "a profile *disposed at* the second portion" (*id.* at 4:7, 4:41 (emphasis added)), "an actuator *disposed at* the tubular" (*id.* at 4:36 (emphasis added)), and "a seat *disposed at* the actuator" (*id.* at 4:37 (emphasis added)).

C. Anticipation by King and Obviousness over King and Haugen

Petitioner contends (1) each of claims 1, 5, 6, 11, and 12 of the '829 Patent are anticipated, under 35 U.S.C. § 102(a), by the first embodiment of King i.e., Figures 1 and 2 of King and related disclosures (Pet. 28–40); (2) those same claims, i.e., claims 1, 5, 6, 11, and 12 are unpatentable, under 35 U.S.C. § 103(a), as obvious over the first embodiment of King and Haugen (*id.* at 40–42); (3) each of claims 1, 5, 6, and 10–13 of the '829 Patent are anticipated, under 35 U.S.C. § 102(a), by the second embodiment of King, i.e., Figures 5 and 6 of King, and related disclosures (*id.* at 42–51); and (4) those same claims, i.e., claims 1, 5, 6, and 10–13 are unpatentable, under 35 U.S.C. § 103(a), as obvious over the second embodiment of King and Haugen (*id.* at 51–52). Patent Owner opposes. *See generally* PO Resp.

To establish anticipation, each and every element in a claim, arranged as recited in the claim, must be found in a single prior art reference. *Net MoneyIN, Inc. v. VeriSign, Inc.*, 545 F.3d 1359, 1369 (Fed. Cir. 2008). "To anticipate a claim, a prior art reference must disclose every limitation of the

claimed invention, either explicitly or inherently." *In re Schreiber*, 128 F.3d 1473, 1477 (Fed. Cir. 1997).

A claim is unpatentable under § 103(a) if the differences between the claimed subject matter and the prior art are such that the subject matter, as a whole, would have been obvious at the time the invention was made to a person having ordinary skill in the art to which said subject matter pertains. *KSR Int'l Co. v. Teleflex Inc.*, 550 U.S. 398, 406 (2007). The question of obviousness is resolved on the basis of underlying factual determinations, including: (1) the scope and content of the prior art; (2) any differences between the claimed subject matter and the prior art; (3) the level of skill in the art; and (4) where in evidence, so-called secondary considerations. *Graham v. John Deere Co. of Kansas City*, 383 U.S. 1, 17–18 (1966).

We analyze the asserted grounds in accordance with the above-stated principles. In our discussion below, we first provide a brief overview of the prior art, and then we address the parties' contentions in turn.

1. Overview of King

King is directed to a ball seat for use in oil and gas wells. Ex. 1002, at code (54), ¶ 2. Figure 1 of King is reproduced below.

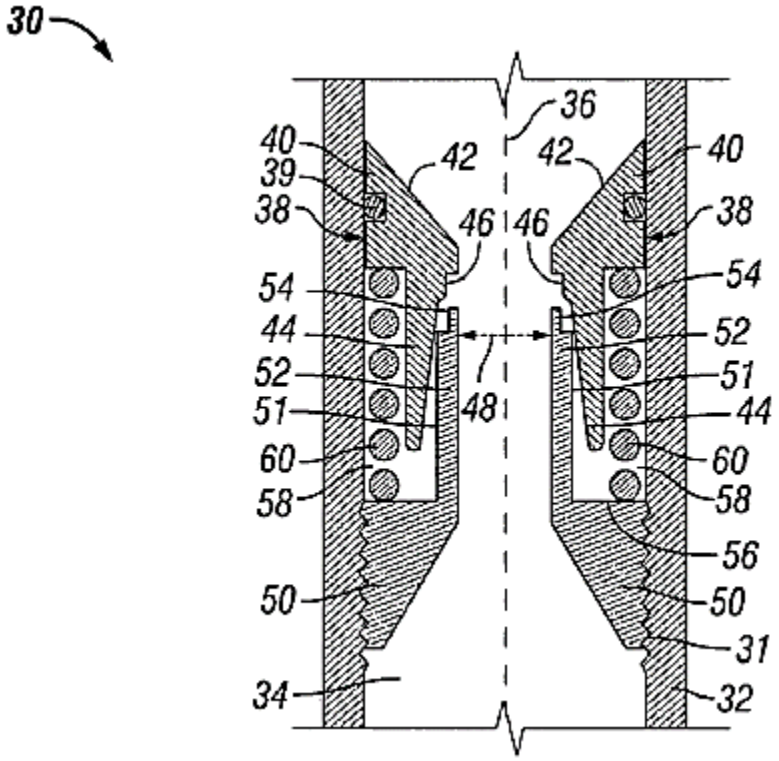

FIG. 1

Figure 1 of King, above, illustrates a cross-sectional view of ball seat 30 in the run-in position. *Id.* ¶¶ 20, 31. Ball seat 30 includes housing 32 having bore 34 defined by an inner wall surface having axis 36. *Id.* ¶ 31. Bore 34 includes seat 38 for receiving plug element 80. *Id.* ¶ 32. Seat 38 includes slidable element 40 and fixed element 50. *Id.* Slidable element 40 includes a housing engagement surface in sliding engagement with the inner wall of housing 32 so that slidable element 40 and seat 38 have a first position, shown in Figure 1, and a second position, shown in Figure 2 of King, which is reproduced below. *Id.*

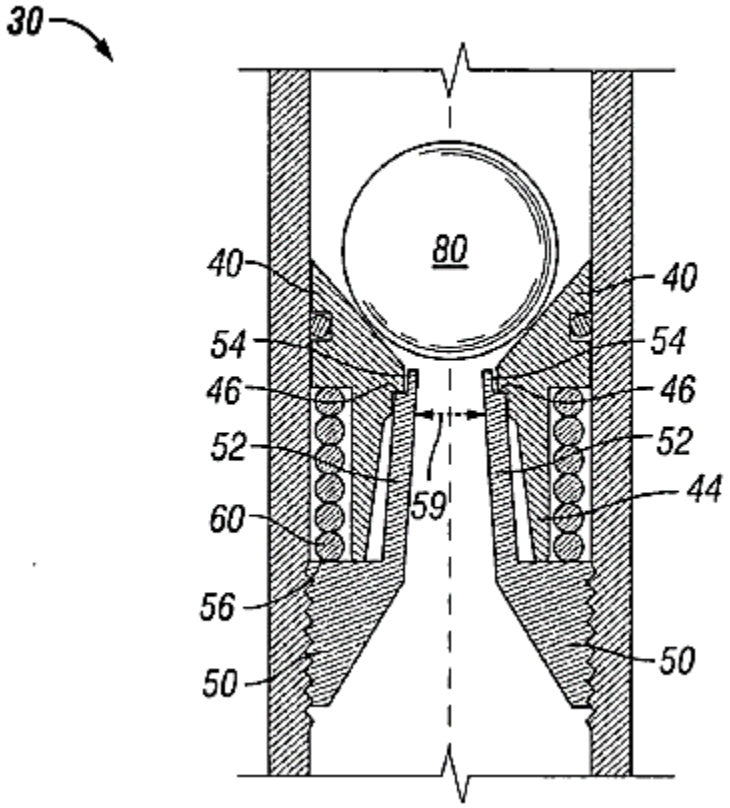

FIG. 2

Figure 2 of King, above, illustrates a cross-sectional view of ball seat 30 in the actuated or set position. *Id.* ¶¶ 21, 31. Plug element 80 illustrated in Figure 2 is a ball. *Id.* ¶ 32. Slidable element 40 includes plug engagement surface 42 (*see* Figure 1) for receiving plug element 80. *Id.* ¶ 33.

2. Overview of Haugen

Haugen describes an apparatus and method of operation for the release of concentric tubing strings used in well operations. Ex. 1003, at code (57). In particular, Haugen describes in operation ball 2000 is inserted and falls into tubing release assembly 1000. *Id.* at 10:16–17. Ball 2000 lands on frusto-conical annular seat 1141 of ball seat 1144. *Id.* at 10:18–19.

3. Claim 1

We begin our analysis with independent claim 1. Petitioner asserts that each of the first and second embodiments of King discloses each limitation of claim 1, and cites Mr. Gonzalez's testimony for support. Pet. 28–34, 42–46 (citing *e.g.*, Ex. 1025 ¶¶ 52–60, 84–90). Alternatively, Petitioner asserts to the extent King's disclosure of a frustoconical surface is disputed, Haugen teaches a frustoconical seat and, relying on the testimony of Mr. Gonzalez, Petitioner provides reasoning to combine. *Id.* at 40–42 (citing *e.g.*, Ex. 1003, 10:18–19, Fig. 4B; Ex. 1025 ¶¶ 78–82).

Patent Owner counters that, for both embodiments, Petitioner has not shown that King discloses (1) a seat having either the "second portion" or the "profile"; (2) a "frustoconical surface"; (3) a "pluggable" seat having each of the limitations recited in claim 1; or (4) that the identified seat is "positionable within a tubular." PO Resp. 17–27, 29–30, 36–44. Regarding only the second embodiment, Patent Owner further counters that Petitioner does not identify the elements as arranged in the claim. *Id.* at 45–48. Regarding obviousness, Patent Owner disputes Petitioner's reasoning to combine. *Id.* at 30–35.

Upon review of the arguments and evidence in the complete record now before us, we find that Petitioner has shown that King discloses each limitation of claim 1. We determine that Patent Owner's arguments and evidence do not overcome Petitioner's showing.

a. Element 1[a]—"[a] pluggable seat"[9]

Element 1[a] is recited in the preamble of claim 1. Petitioner contends "[t]he entirety of King is about pluggable seats." Pet. 29. King describes "a housing having a longitudinal bore and a reusable seat disposed within the bore." Ex. 1002, (57). King also discloses ball seat 30 (first embodiment) and ball seat 230 (second embodiment). Ex. 1002 ¶¶ 20, 31, 43, 51). The term "seat" is recited in the preamble and body of claim 1 (Ex. 1001, 3:55, 4:9) and we treat it as limiting for the reasons discussed above. *See supra* § III.B.3. The parties' contentions regarding "pluggable seat" are discussed below with respect to the remaining elements of claim 1, as this recitation also is in the body of the claim. *See* §§ III.C.3.b–III.C.3.d.

b. *Element 1[b]— "a first portion, positionable within a tubular, being receptive to a runnable member seatable thereagainst at a frustoconical surface thereof"*

i. Anticipation

For element 1[b], Petitioner points to slidable element 40 and surface 42 in both embodiments, and cites to Mr. Gonzalez's testimony as support. Pet. 29, 30, 42, 43 (citing *e.g.*, Ex. 1002 ¶¶ 20, 21, 31, 33, 51, Figs. 1, 5; Ex. 1025 ¶¶ 53–55, 85, 86). Regarding the first embodiment, relying on the testimony of Mr. Gonzalez, Petitioner provides an annotated Figure 1 of King identifying the frustoconical surface of the first portion recited in element 1[b]. *Id.* at 29, 30; Ex. 1025 ¶ 53. Figure 1 of King with Petitioner's annotations is reproduced below.

---

[9] Ex. 1001, 3:55.

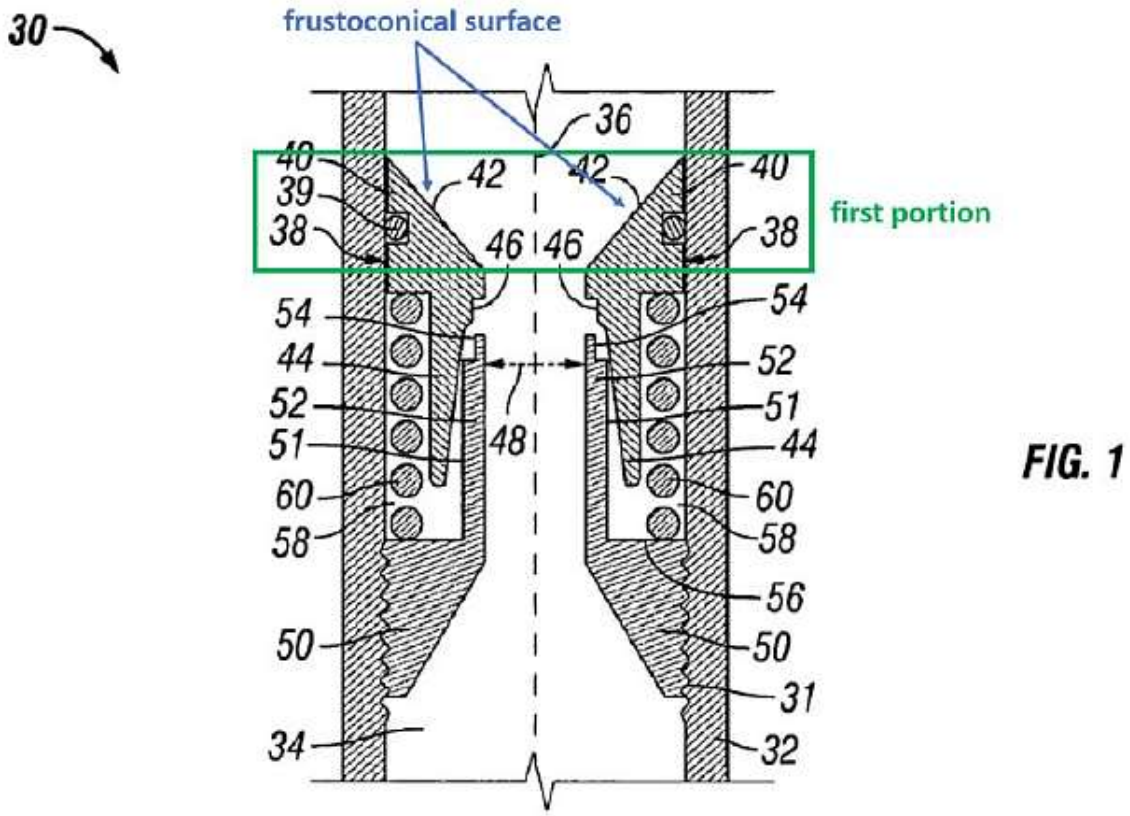

FIG. 1

Id. at 30; Ex. 1025 ¶ 53. Annotated Figure 1 of King above depicts a cross-sectional view of ball seat 30 in the run-in position (Ex. 1002 ¶¶ 20, 31), with Petitioner's green annotations identifying the first portion, and blue annotations identifying the frustoconical surface. Pet. 30; Ex. 1025 ¶ 53.

Ball seat 30 includes slidable element 40, identified by Petitioner's green annotation as the first portion, and fixed element 50. Ex. 1002 ¶ 32. Slidable element 40 includes plug engagement surface 42 for receiving plug element 80 (i.e., a ball). *Id.* ¶ 33. Petitioner's annotations include blue arrows pointing to plug engagement surface 42 of slidable element 40 with the text "frustoconical surface." Pet. 30.

Regarding the second embodiment, seat 230 illustrated in Figures 5 and 6 is similar to seat 30 in the first embodiment. Ex. 1002 ¶ 43. Relying on the testimony of Mr. Gonzalez, Petitioner provides an annotated Figure 5

identifying the frustoconical surface of the first portion recited in element 1[b]. Pet. 43; Ex. 1025 ¶ 85. Figure 5 of King with Petitioner's annotations is reproduced below.

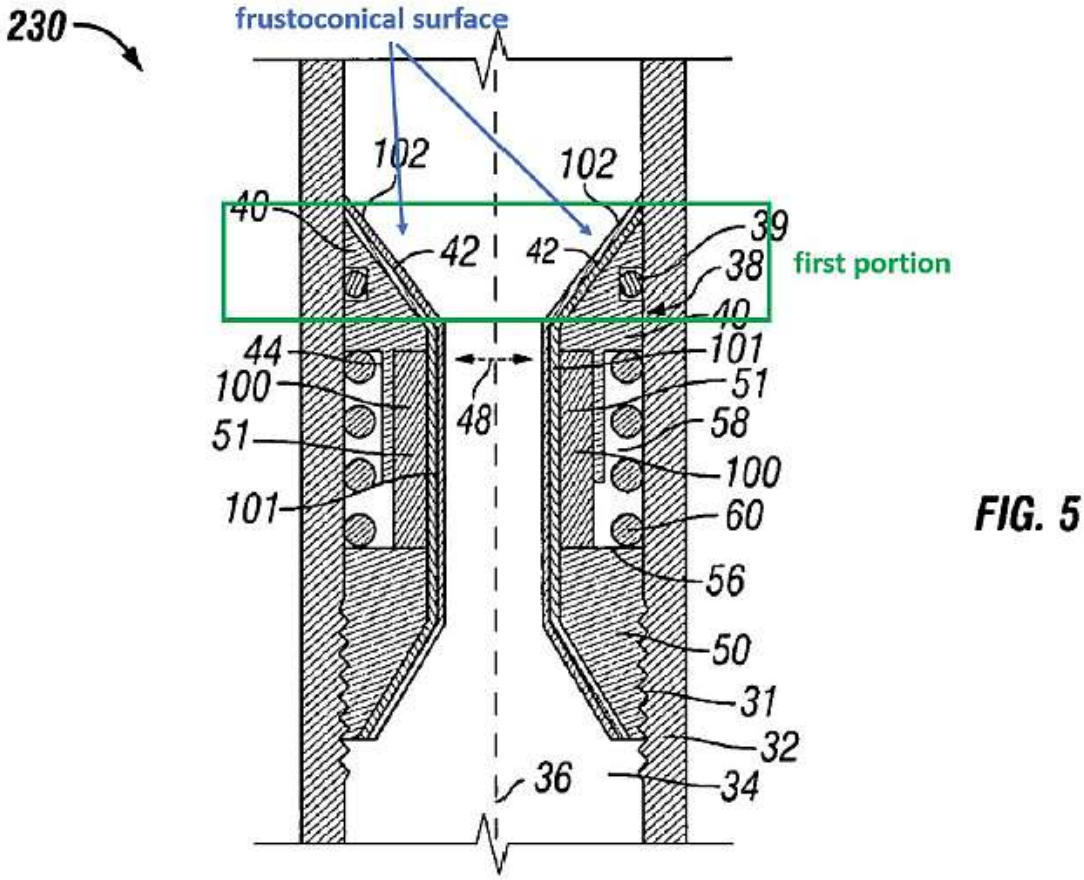

Id.; Ex. 1025 ¶ 85. Annotated Figure 5 of King above depicts a cross-sectional view of ball seat 230 in the run-in position (Ex. 1002 ¶¶ 24, 43), with Petitioner's green annotations identifying the first portion, and blue annotations identifying the frustoconical surface. Pet. 43; Ex. 1025 ¶ 85.

Relying on the testimony of Mr. Watson, Patent Owner disputes that King discloses a frustoconical surface, recited in element 1[b]. PO Resp. 20–25, 39–41 (citing, *e.g.*, Ex. 2010 ¶¶ 89–108). Mr. Watson testifies that a person having ordinary skill in the art "would have understood that the

'plug element engagement surface' of the ball seat disclosed by King, which is identified in Figures 1 and 2 by reference number **42**, does **<u>not</u>** have a frustoconical shape, regardless of the apparent cross-section shown in those Figures." Ex. 2010 ¶ 89. Mr. Watson testifies "King explicitly states that Figures 1 and 2 are not drawn accurately." *Id.* ¶ 90 (citing Ex. 1002 ¶ 33). Mr. Watson also testifies that his conclusion is supported by King's disclosure because viewed in context, King describes that the shape of its engagement surface (reciprocal to the shape of the ball) prevents extrusion. *Id.* ¶¶ 91–103 (citing, *e.g.*, Ex. 1002 ¶¶ 6–12). Mr. Watson further testifies his analysis also applies to the second embodiment of King. *Id.* ¶¶ 104–108 (citing, *e.g.*, Ex. 1002 ¶ 43).

Regarding the first embodiment, King describes

> Slidable element 40 also includes plug element engagement surface 42 for receiving plug element 80. Plug element engagement surface 42 can be shaped to form an engagement surface with plug element 80 that is reciprocal in shape to the shape of the plug element 80 (shown in FIG. 2 as a ball). Thus, in this embodiment, plug element 80 is spherically-shaped and plug element engagement surface 42 includes an arc shape (not shown). As mentioned above, however, although plug element 80 is shown as a ball in FIG. 2, it is to be understood that plug element 80 may be a drop plug, dart, or any other plug element known to persons of ordinary skill in the art.

Ex. 1002 ¶ 33.

Consistent with Mr. Watson's testimony, the textual description in King relating to the first embodiment is of surface 42 having a shape that is reciprocal to the shape of plug element 80. *Id.* Additionally, King describes in the first embodiment that plug element 80 is "spherically-shaped and plug element engagement surface 42 includes an arc shape (not shown)." *Id.*

Regarding the second embodiment, consistent with Mr. Gonzalez's testimony, Figure 5 of King illustrates a frustoconical surface, annotated in blue by Mr. Gonzalez, against which a runnable member is seated. Ex. 1002, Fig. 5. Contrary to the testimony of Mr. Watson that King "provides no indication" that the disclosure differs in Figure 5 (Ex. 2010 ¶ 104), King describes that in the second embodiment components deform or change shape. In particular, King describes that "plug element support member 51 comprises *deformable* element 100 disposed in chamber 58; *deformable* inner wall 101, and layer 102 disposed on plug element engagement surface 42 and along inner wall 101." *Id.* ¶ 43 (emphasis added). King also describes in only the "set position" shown in Figure 6 "layer 102 is *deformed* to have a reciprocal arc shape" to plug element 80, which is a ball. *Id.* ¶ 48 (emphasis added). Figure 5 relied upon by Mr. Gonzalez, however, illustrates ball seat 230 in the run-in position and the frustoconical surface, as identified by Mr. Gonzalez. *Id.* ¶ 24.

That King does not use the term "frustoconical" is not dispositive. Mr. Gonzalez testifies that his opinion is supported by Figure 5 of King. Ex. 1025 ¶ 85 (citing, *e.g.*, Ex. 1002, Fig. 5). We credit Mr. Gonzalez's testimony regarding the second embodiment of King over the testimony of Mr. Watson, as Mr. Gonzalez's testimony is consistent with the disclosure of King. It is well settled that claim elements patent drawings show clearly are not to be disregarded despite having a different term of identification. *In re Mraz*, 455 F.2d 1069, 1072 (CCPA 1972).

Contrary to Patent Owner's arguments and Mr. Watson's testimony regarding King's disclosure that its engagement surface is shaped to prevent extrusion (PO Resp. 23–24; Ex. 2010 ¶¶ 91–108 (citing, *e.g.*, Ex. 1002

¶¶ 6–12)), King's disclosure in that regard pertains to contact stress. Ex. 1002 ¶¶ 6–12. Figure 5 illustrates ball seat 230 in the run-in position, prior to the ball making contact with the seat. *Id.* ¶¶ 24, 43, Fig. 5.

Patent Owner points to Mr. Gonzalez's deposition testimony as further support for its position. PO Resp. 21 (citing Ex. 2005, 122:18–123:10). Contrary to Patent Owner's contentions, however, Mr. Gonzalez's deposition testimony is consistent with his declaration testimony and the disclosure of King. Ex. 1025 ¶ 85; Ex. 1002 ¶ 48, Figs. 5, 6. In particular, Mr. Gonzalez testifies that, unlike Figure 6, Figure 5 of King appears "frustoconical." Ex. 2005, 122:18–123:21.

For the reasons given, we determine that Petitioner's arguments and evidence support a finding that King discloses element 1[b]. We determine that Patent Owner's arguments and evidence do not overcome Petitioner's showing.

ii. Obviousness

Petitioner asserts to the extent King's disclosure of a frustoconical surface is disputed, a person having ordinary skill in the art would have found such a shape for a ball seat obvious. Pet. 40–42 (citing *e.g.*, Ex. 1003, 10:18–19, Fig. 4B; Ex. 1025 ¶¶ 78–82). Regarding reasoning to combine, relying on the testimony of Mr. Gonzalez, Petitioner asserts that "once it was determined that a ball could be seated on a given shaped ball seat surface (*e.g.*, arched, tapered (coned) surface, parabolic), it would have been even further obvious to a POSITA to use one of those shaped surfaces." *Id.* at 41; Ex. 1025 ¶ 81. Mr. Gonzalez also testifies "Haugen, like King and the '829 Patent, is directed to ball-actuated sliding sleeves for well completion

operations." *Id.* Petitioner refers to the same arguments and evidence for obviousness over the second embodiment of King and Haugen. *Id.* at 51 (referencing discussion "in Section XI.B *supra*").

Consistent with Petitioner's contentions and Mr. Gonzalez's testimony, Haugen includes ball 2000 that is inserted and falls into tubing release assembly 1000 and lands on frusto-conical annular seat 1141 of ball seat 1144. Ex. 1003, 10:16–19. Petitioner's contentions and Mr. Gonzalez's testimony also are consistent with other evidence, for example, Ruddock's description that "uphole frustocone 18 presents a surface 22 that is interactive with a tripping ball 24, when such ball of an appropriate external dimension (larger than the inside dimension of the ball seat 14) is dropped onto the seat 14." Ex. 1024 ¶ 12.

Patent Owner does not dispute that Haugen teaches a "frustoconical surface" as recited in claim 1. *See generally* PO Resp. Instead, Patent Owner asserts (1) a person of ordinary skill in the art would have had no reason to look to Haugen, as it is unrelated to sliding sleeves or the problem of ball extrusion (*id.* at 31–33); and (2) even if such a person would have looked to Haugen, he or she would not have made the proposed modification because the resulting device would not prevent extrusion in the manner described by King, i.e., it would not achieve the stated purpose of King (*id.* at 34–35).

Regarding the first of Patent Owner's assertions, consistent with Petitioner's contentions and the testimony of Mr. Gonzalez and contrary to Patent Owner's assertion and the testimony of Mr. Watson, Haugen describes an apparatus and method of operation for the release of concentric tubing strings used in well operations. Ex. 1003, at code (57). We agree

with Petitioner that the ’829 Patent Specification does not limit the field of endeavor to “fracturing” or “sliding sleeves” and claim 1 does not recite that the “frustoconical surface” of the first portion prevents extrusion. Pet. Reply 17. Indeed, the ’829 Patent describes the field broadly as “industries concerned with earth formation boreholes, such as hydrocarbon recovery and gas sequestration.” Ex. 1001, 1:6–7. “When a work is available in one field of endeavor, design incentives and other market forces can prompt variations of it, either in the same field or a different one. If a person of ordinary skill can implement a predictable variation, § 103 likely bars its patentability.” *KSR* at 417.

Patent Owner relies on the level of skill identified by Mr. Gonzalez (Pet. 23 (citing Ex. 1025 ¶¶ 41–43)) to support its position that Haugen is not in the same field of endeavor as the ’829 Patent. PO Resp. 32. As we explained above (*see supra* § III.A), we are persuaded to adopt Mr. Gonzalez’s assessment of a person with ordinary skill in the art, which is not disputed by Patent Owner, because we find that Mr. Gonzalez’s assessment of the level of skill is consistent with the problems and solutions in the prior art of record.

Mr. Gonzalez testifies that a person of ordinary skill in the art would have had a bachelor’s degree in petroleum or mechanical engineering, or other science or technical degree applicable in the oil and gas industry, and at least three years of experience in drilling and completions of oil and gas wells, including experience in well fracturing simulations. Pet. 23 (citing Ex. 1025 ¶¶ 41–43). It is the experience in well fracturing simulations that Patent Owner relies on to argue Haugen is unrelated. PO Resp. 32. Petitioner, however, further contends that the level of education necessary

may increase or decrease depending on years of experience, and conversely the years of experience may increase or decrease depending on level of education. *Id.* Patent Owner's reliance on experience in well fracturing simulations is misplaced because that experience may be decreased depending on level of education.

Even using the undisputed level of skill including experience in well fracturing simulations for the field of endeavor, it is not limited so as to exclude Haugen's teachings relating to concentric tubing strings used in well operations. Ex. 1003, at code (57). Patent asserts a fundamental difference is that the seat in Haugen is fixed, only release sleeve 1016 moves. PO Resp. 32; Ex. 2010 ¶¶ 149–150. Patent Owner's assertions pertain to "pressure differential formed across the plugged ball seat" (*id.*), but in King's Figures 1 and 5, the surface identified by Petitioner is of a seat in the run-in position. Ex. 1002 ¶¶ 21, 24. Haugen, like King, describes ball 2000 landing on frusto-conical seat 1141. Ex. 1003, 10:18.

We turn to Patent Owner's assertion and Mr. Watson's testimony that Petitioner's replacement would have been seen as contrary to the purpose and operation of King. PO Resp. 34–35; Ex. 2010 ¶¶ 157–165. Patent Owner's assertion and Mr. Watson's testimony pertain to extrusion, but claim 1 does not recite that the "frustoconical surface" of the first portion prevents extrusion. Also, in King's Figures 1 and 5, the surface identified by Petitioner is of a seat in the run-in position. Ex. 1002 ¶¶ 21, 24. We, therefore, determine Patent Owner's assertion and Mr. Watson's testimony are not consistent with King's disclosure.

We also determine that King does not teach away from Petitioner's proposed combination. A reference may be said to teach away when a

person of ordinary skill, upon reading the reference, would be discouraged from following the path set out in the reference, or would be led in a direction divergent from the path that was taken by the applicant." *In re Gurley*, 27 F.3d 551, 553 (Fed. Cir. 1994). Even in the portion of King relied upon most heavily by Patent Owner and Mr. Watson, King describes various shapes of surface 42, as well as plug element 80, and that in certain, but not all embodiments, the surfaces would be reciprocal. Ex. 1002 ¶ 33. Rather than teaching away, as discussed above with respect to anticipation (*see supra* § III.C.3.b.i), Figure 5 of King illustrates a surface that appears to be frustoconical. *See, e.g., id.* at Fig. 5. Additionally, King describes that "[u]pon pressurization of the conduit so that the ball is pushed into the seat" a reduced inner diameter of the seat results in the ball and seat being able to withstand higher pressure due to the forces acting on the ball. *Id.* ¶ 9. Such a narrower opening is present in a frustoconical surface. *Id.* at Fig. 5; Ex. 1003, 10:6–21, Figs. 4A, 4B.

We further note with respect to claim 1 and obviousness, consistent with Mr. Gonzalez's testimony, King describes that "spherically-shaped" plug element 80 is just one embodiment. *Id.* Claim 1 does not require that the "runnable member" be a ball. Ex. 1001, 3:55–4:10. King describes that "plug element 80 may be a drop plug, dart, or any other plug element known to persons of ordinary skill in the art." Ex. 1002 ¶ 33. Even in embodiments in which King's surface 42 is reciprocal to the shape of plug element 80, i.e., in embodiments in which the runnable member is not a ball, that reciprocal shape is not spherical or arc shaped. *See, e.g., id.* ¶ 48, Fig. 5.

Upon consideration of the parties' arguments and evidence, we are persuaded that Petitioner has offered articulated reasoning with a rational

underpinning as to why one of ordinary skill in the art would have combined the teachings of King and Haugen in the manner proposed.

Regarding "frustoconical surface" recited in claim 1, therefore, with respect to the second embodiment of King and both obviousness grounds, we agree with Petitioner and we credit and give significant weight to the testimony of Mr. Gonzalez over that of Mr. Watson because Petitioner's arguments and Mr. Gonzalez's testimony are consistent with the evidence of record, including King's disclosures and teachings above.

Patent Owner also contends that Petitioner fails to show that the identified seat is within the tubular. PO Resp. 26–27 (citing Ex. 2010 ¶¶ 121–123). Patent Owner, more specifically, contends "[n]otably, a structure having its *upper and lower ends* screwed into a string of conduit is not 'positioned within' a tubular," rather "that structure forms the tubular." *Id.* (emphasis added). Patent Owner refers to the upper and lower ends of King's seat. *Id.*; *see also id.* at 26 (asserting that King describes the seat as forming the tubular).

Contrary to Patent Owner's arguments and Mr. Watson's testimony, claim 1 recites "a first portion, positionable within a tubular," and does not require that the entire seat be positioned within the tubular. Ex. 1001, 3:56. We agree with Petitioner and credit the testimony of Mr. Gonzalez over the testimony of Mr. Watson that King's first portion is shown as being within a tubular body as Petitioner's argument and Mr. Gonzalez's testimony are consistent with King's disclosure cited therein. Pet. 29–30, 42–43; Pet. Reply 11–12; Ex. 1025 ¶¶ 53–55, 85–86.

For the reasons given, we determine that Petitioner's arguments and evidence support a finding that the combination of King and Haugen teaches

element 1[b]. We also find that Petitioner has offered articulated reasoning with a rational underpinning as to why one of ordinary skill in the art would have combined the teachings of King and Haugen in the manner proposed. We determine that Patent Owner's arguments and evidence do not overcome Petitioner's showing.

c. Element 1[c]—"a second portion positioned downstream of the first portion, downstream being defined as a direction that the runnable member is moved into seating engagement with the pluggable seat, having a radial dimension smaller than a smallest radial dimension of the first portion"[10]

For element 1[c], Petitioner points to fixed element 50 in both embodiments, and again cites to Mr. Gonzalez's testimony as support. Pet. 31, 32 (citing *e.g.*, Ex. 1002 ¶¶ 32, 38, 62, Figs. 2, 5, 6; Ex. 1025 ¶¶ 56, 57, 87, 88). Relying on the testimony of Mr. Gonzalez, the Petition also includes Figure 2 of King with Petitioner's annotations identifying the second portion positioned downstream having a radial dimension smaller than the smallest radial dimension of the first portion. *Id.* Figure 2 with Petitioner's annotations is reproduced below.

[10] Ex. 1001, 4:1–6.

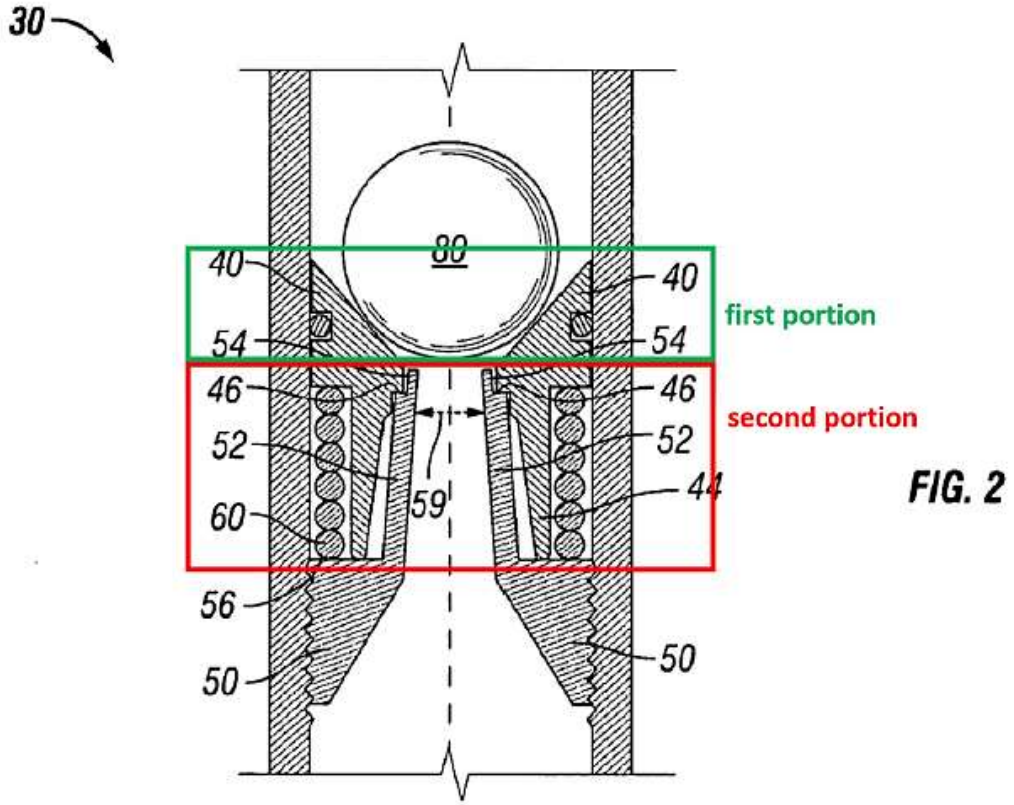

Id. at 32. Annotated Figure 2 of King above depicts a partial cross-sectional view of ball seat 30 in the actuated or set position (Ex. 1002 ¶ 21) with Petitioner's green annotations identifying the first portion and red annotations identifying the second portion. Pet. 32. Petitioner asserts "the second portion [red] has a radial dimension (*e.g.*, inner diameter **59**) that is smaller than a smallest radial dimension (*e.g.*, inner diameter) of the first portion [green]." *Id.*

Regarding the second embodiment and seat illustrated in Figures 5 and 6, relying on the testimony of Mr. Gonzalez, the Petition includes an annotated Figure 5 of King, which is reproduced below.

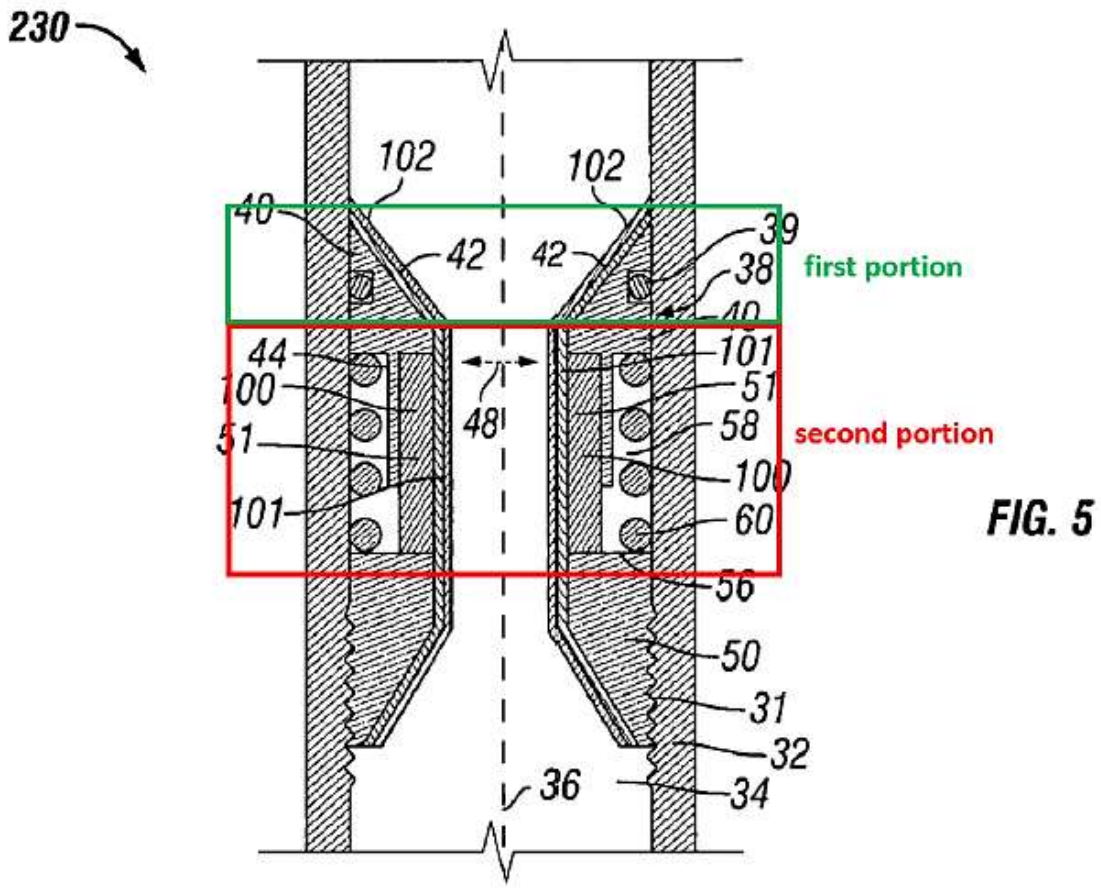

Pet. 44 (citing Ex. 1025 ¶¶ 87–88). Annotated Figure 5 of King above depicts a cross-sectional view of ball seat 230 (Ex. 1002 ¶ 24) with Petitioner's green annotations identifying the first portion and red annotations identifying the second portion. Pet. 44 (citing Ex. 1025 ¶¶ 87–88).

Patent Owner does not dispute Petitioner's contentions with regards to element 1[c]. *See generally* PO Resp. "Any material fact not specifically denied may be considered admitted." *See* 37 C.F.R. § 42.23(a) (2019); *see also in re NuVasive, Inc.*, 842 F.3d 1376, 1380–81 (Fed. Cir. 2016) (determining Patent Owner waived arguments made only in its Preliminary Response but not raised in the Patent Owner Response after institution).

Petitioner's contentions and the testimony of Mr. Gonzalez are consistent with the evidence cited therein, including Figures 2 and 5 of King above showing the second portion positioned downstream of the first portion, having a radial dimension smaller than a smallest radial dimension of the first portion. Accordingly, now, in view of the entire record, we adopt as our own Petitioner's analysis of element 1[c] as recited in independent claim 1. For the reasons given, we determine that Petitioner's arguments and evidence demonstrate that King discloses element 1[c].

d. Element 1[d]—"a profile disposed at the second portion configured to increase resistance to extrusion of a runnable member past the pluggable seat in comparison to the same pluggable seat without the profile"[11]

Regarding the first embodiment, relying on Mr. Gonzalez's testimony, Petitioner asserts that King's "***profile*** surfaces **54**" discloses "a profile" recited in element 1[d]. Pet. 33, 34 (citing, *e.g.*, Ex. 1002 ¶¶ 35, 38, Figs. 1, 2; Ex. 1025 ¶¶ 58–60). King discloses "a collet having a plurality of collect fingers 52," which "include profile surfaces 54" at their tips. Ex. 1002 ¶ 35. King further describes when slidable element 40 moves downward as the result of fluid pressure, collet fingers 52 including profile surfaces 54 are forced inward until profile surfaces 54 engage slidable element profile surfaces 46 causing a decrease in the inner seat diameter. *Id.* ¶ 38.

Regarding the second embodiment, again relying on Mr. Gonzalez's testimony, Petitioner asserts plug element support member 51 comprising deformable material 100 discloses "a profile" recited in element 1[d].

---

[11] Ex. 1001, 4:7–10.

Pet. 44–46 (citing, *e.g.*, Ex. 1002 ¶¶ 43, 51, Fig. 6; Ex. 1025 ¶¶ 88–90). The Petition includes an annotated Figure 6 of King, which is reproduced below.

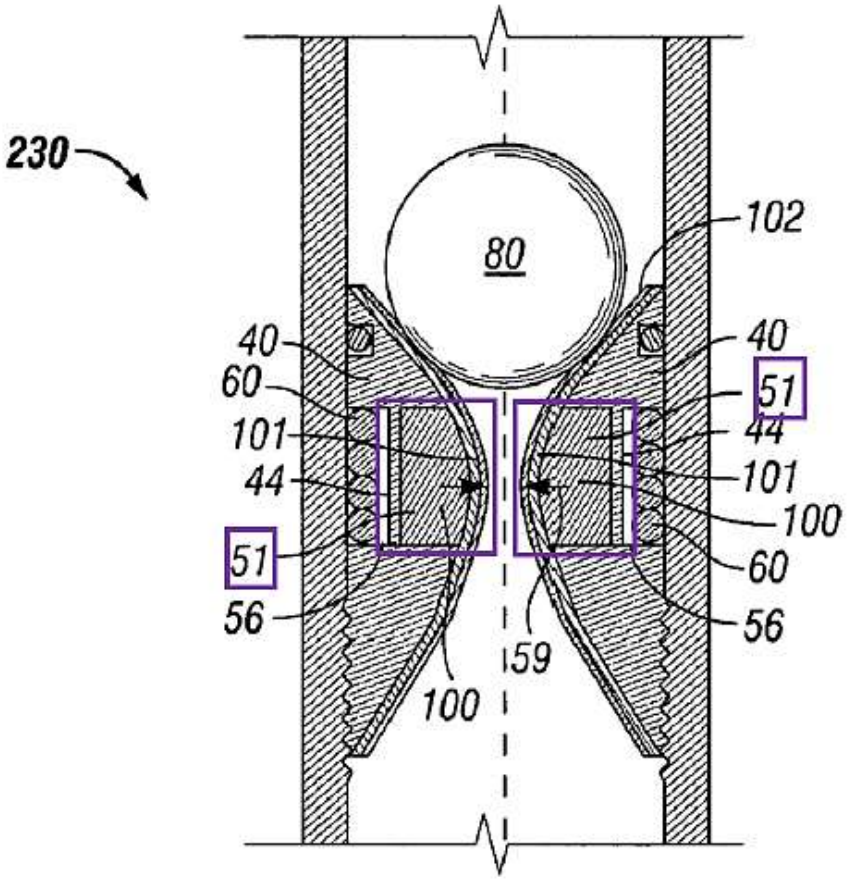

FIG. 6

Pet. 45.

Annotated Figure 6 of King above depicts a cross-sectional view of ball seat 230 in the actuated position (Ex. 1002 ¶ 25) with Petitioner's purple annotations identifying the profile. *Id.*

King discloses:

> Similarly to the embodiments discussed above with respect to FIGS.1-4, deformable material 100 of ball seat 230 provides additional support to plug element 80 due to deformable material 100 being extended or expanded laterally, e.g., inwardly toward axis 36 so that the force acting upon plug element 80 is distributed through a larger area. As also with the embodiments shown in FIGS. 1-4, ball seat 230 includes a return member 60

> that is energized when slidable element 40 is moved from the run-in position (FIG. 5) to the set position (FIG. 6). Accordingly, when the pressure forcing plug element 80 into plug element engagement surface 42 dissipates, return member 60 forces slidable element 40 from the set position to the run-in position. As a result, the portion of the seat inner diameter defined by deformable element 100 is returned to the first seat inner diameter 48.

Ex. 1002 ¶ 51.

Patent Owner counters that, for both embodiments, Petitioner has not shown that King discloses (1) a seat having either the "second portion" or the "profile" (PO Resp. 17–20, 29–30, 36–39, 44); or (2) a "pluggable" seat having each of the limitations recited in claim 1 (*id.* at 25–26, 41–42). Regarding only the second embodiment, Patent Owner further counters that Petitioner does not identify the elements as arranged in the claim. *Id.* at 45–48.

Patent Owner's contentions that Petitioner has not shown that King discloses a seat having either the "second portion" or the "profile" (PO Resp. 17–20, 29–30, 36–39, 44) are premised on Patent Owner's proposed claim constructions for "seat" and "profile," which we decline to adopt for the reasons given with respect to claim construction. *See supra* §§ III.B.3, III.B.4.

Relying on the testimony of Mr. Watson, regarding both embodiments in King, Patent Owner contends "Petitioner interprets the seat in King as including a variety of additional components that are connected to the body that receives a ball," but "Petitioner offers *no support* for its identification of those additional components as part of the seat." PO Resp. 19, 38 (citing Ex. 2010 ¶¶ 53–68, 72, 78–79, 87–88). Patent Owner also contends that components in King's seats do not perform the function of a seat, i.e.,

receive a runnable member (e.g., a ball) to form a plug. PO Op. Br. 5–7. As we explained above, we determine that the broadest reasonable interpretation of "seat" is "a body or portion of a body that receives a runnable member (e.g., a ball) to form a plug." *See supra* § III.B.3. Consistent with Petitioner's contentions, however, we determine that "body" is used as another term for structure and encompasses structures having two distinct objects or pieces joined by welding, soldering, brazing, *or fastening*. *Id.*

We agree with Petitioner's contentions and credit and give significant weight to the testimony of Mr. Gonzalez over that of Mr. Watson because Petitioner's contentions and Mr. Gonzalez's testimony are consistent with the evidence cited therein. In particular, King expressly refers to "ball *seat* 30" (Ex. 1002 ¶ 31 (emphasis added)) and "ball *seat* 230" (*id.* at 43 (emphasis added)). Also, King's seats comprise elements that are secured or fastened, which is all that is required in accordance with the broadest reasonable interpretation of "seat." For example, King describes "securing ball seat 30 into a string of conduit" using "[a]ttachment members such as threads." *Id.* ¶ 31; *see also id.* ¶ 32 (describing that the securing of all elements of King's seats, i.e., "[f]ixed element 50 is secured to the inner wall surface of bore 34 by attachment members such as through threads 31 and includes one or more plug element support members 51" and "[f]ixed element 50 also includes retainer wall surface 56 for engaging with stop member 44 of slidable element 40").

King's seats are not mere collections of components, but instead are structures with elements that are secured together and operate together in a cohesive manner to receive the plug element, e.g., the ball, and under

pressure push the ball into the seat to form a plug in a well conduit, thereby performing the function of the seat. *Id.* at code (57), ¶ 9. More specifically, slidable element 40 and fixed element 50 operate such that each of King's seats have a first position (i.e., the run-in position) and a second position (i.e., the set position). *Id.* ¶¶ 32, 43, 44, Figs. 1, 2, 5, 6. The elements of King's seats including slidable element 40 and fixed element 50 (*id.* ¶ 32), along with plug element support member 51 comprising a collet with collet fingers 52 and profiles 54 (*id.* ¶ 35) or plug element support member 51 made of deformable element 100 (*id.* ¶ 43), receive plug element 80 and create a sealing engagement in the set position. *Id.* ¶¶ 38, 44, 46, 48, Figs. 1, 2, 5, 6.

Relying on the testimony of Mr. Watson, Patent Owner takes the position that "a structure that has its upper and lower ends screwed into a string of conduit" differs from the claimed seat. PO Resp. 26–27 (citing Ex. 2010 ¶¶ 121–123). For the reasons given above with respect to element 1[b], we are persuaded that Petitioner's contentions and Mr. Gonzalez's testimony are consistent with the recitation in the claim. *See supra* III.C.3.b. Patent Owner's position, however, is based on the components being screwed into the conduit. PO Resp. 26–27; Ex. 2010 ¶¶ 121–123. Again, King's "ball seat 30" and "ball seat 230" are not mere collections of components but, instead, comprise elements secured to a single structure, the "seat." *See, e.g.*, Ex. 1002 ¶¶ 31, 43, Figs. 1, 2, 5, 6.

We turn to Patent Owner's contentions more specifically directed at the "profile" recited in claim 1. Patent Owner contends "the 'profile surfaces 54' of King are not disposed at the surface of the second portion." PO Resp. 30. Regarding the first embodiment, consistent with Petitioner's

contentions King describes profile surfaces 54 on collet fingers 52, which are part of fixed element 50. Ex. 1002 ¶ 35. King, more specifically, describes that fixed element 50 "includes one or more plug element support members 51," which in the first embodiment is "a collet having a plurality of collet fingers 52." *Id.* King further describes that "[t]he tips of collet fingers 52 include profile surfaces 54 that are at least partially reciprocal to profile surface 46 on slidable element 40." *Id.* Accordingly, profile surfaces 54 and collet fingers 52 are disposed at the surface of the second portion, i.e., fixed element 50. *Id.*

Regarding the second embodiment, Patent Owner asserts that plug element support member "is not disposed at 'the surface'" of the second portion because "plug element support member 51 is located underneath both 'inner wall 101' and 'layer 102.'" PO Resp. 44. King describes that fixed element 50 "includes one or more plug element support members 51." *Id.* ¶ 35. In the second embodiment, plug element support member 51 comprises deformable element 100, as well as deformable inner wall 101, and layer 102. *Id.* ¶ 43, Figs. 5, 6. Plug element support member 51, therefore, is at the surface of fixed element 50. *Id.* Additionally, King describes that inner wall 101 and layer 102 are not required and may be omitted. *Id.* ¶ 49. In that variation of the second embodiment, deformable element 100 also is disposed at the surface.

Relying on the testimony of Mr. Watson, Patent Owner also contends that "profile surfaces 54" are not "configured to 'increase resistance to extrusion of a runnable member,'" instead "they are simply configured to contact reciprocal surfaces on the slidable element." PO Resp. 30 (citing Ex. 2010 ¶¶ 141, 144). Patent Owner's argument in that regard is based on

its contention that the broadest reasonable interpretation of "profile" is "a surface element that contacts a runnable member such as a ball." PO Resp. 14. As discussed with respect to claim construction, we disagree. For the reasons given above, we adopt Petitioner's proposed construction (Pet. 22; Ex. 1025 ¶ 48) and determine that "profile" means "a distinct feature disposed at a section of the surface of the 'second portion.'" *See supra* § III.B.4. We also determine that "disposed at" encompasses a features or elements that are part of a single structure as well as features or elements that are connected or nearby. *Id.*

Regarding the first embodiment, consistent with Petitioner's contentions and Mr. Gonzalez's testimony, King describes "[d]ue to collet fingers 52 being forced inward, the seat inner diameter decreases from first seat inner diameter 48 (FIG. 1) to second seat inner diameter 59 (FIG. 2), thereby providing greater support to plug element 80." *Id.* ¶ 38. King further describes "[a]s plug element 80 deforms and is extruded through seat inner diameter 59, plug element 80 may contact with, and be additionally supported by, collet fingers 52." *Id.* Regarding the second embodiment, consistent with Petitioner's contentions and Mr. Gonzalez's testimony, King describes that plug element support member 51 is made of deformable material 100 that "provides additional support to plug element 80 due to deformable material 100 being extended or expanded laterally, e.g., inwardly toward axis 36." *Id.* ¶ 51.

We now turn to Patent Owner's argument that Petitioner has not shown the asserted art teaches a "pluggable" seat having each of the limitations recited in claim 1. PO Resp. 25–26, 41–42. We agree with Petitioner that each of King's Figures 1, 2, 5, and 6 shows a pluggable seat,

regardless of whether that figure shows the seat before or after the ball has been seated because Petitioner's arguments and evidence are consistent with the evidence cited therein. *See, e.g.*, Pet. Reply 10–11. Regarding the first embodiment, Patent Owner contends "the structure Petitioner identifies as satisfying the 'second portion' and 'profile' claim limitations is present only once the seat of King has been plugged." PO Resp. 25 (citing Pet. 31–34; Ex. 1002, Fig. 2). Patent Owner also asserts "Mr. Gonzalez admitted that the 'second portion' and 'profile' claim limitations are not present in Figure 1 of King," but "it is Figure 1 of King that shows a 'pluggable seat.'" PO Resp. 25 (citing Ex. 2005, 54:15–55:6, 59:22–60:13; Ex. 2010 ¶ 119).

Importantly, King discloses the same seat in Figures 1 and 2, i.e., "ball seat 30." Ex. 1002 ¶ 21 ("FIG. 2 is a partial cross-sectional view of the ball seat shown in FIG.1 shown in the actuated or set position"), ¶ 31 (describing "one embodiment" of "ball seat 30" with reference to "FIGS. 1–2"), ¶ 32 (describing that slidable element 40 "has a first position (FIG. 1) and a second position (FIG. 2)"). Mr. Gonzalez's deposition testimony (Ex. 2005, 54:15–55:6, 59:22–60:13) simply reflects that "ball seat 30" has two positions, i.e., "the run-in position" and "the actuated or set position." *See, e.g.*, Ex. 1002 ¶¶ 20, 21. Figure 1 of King is reproduced below with annotations to show that the disputed elements are present, contrary to Patent Owner's assertion.

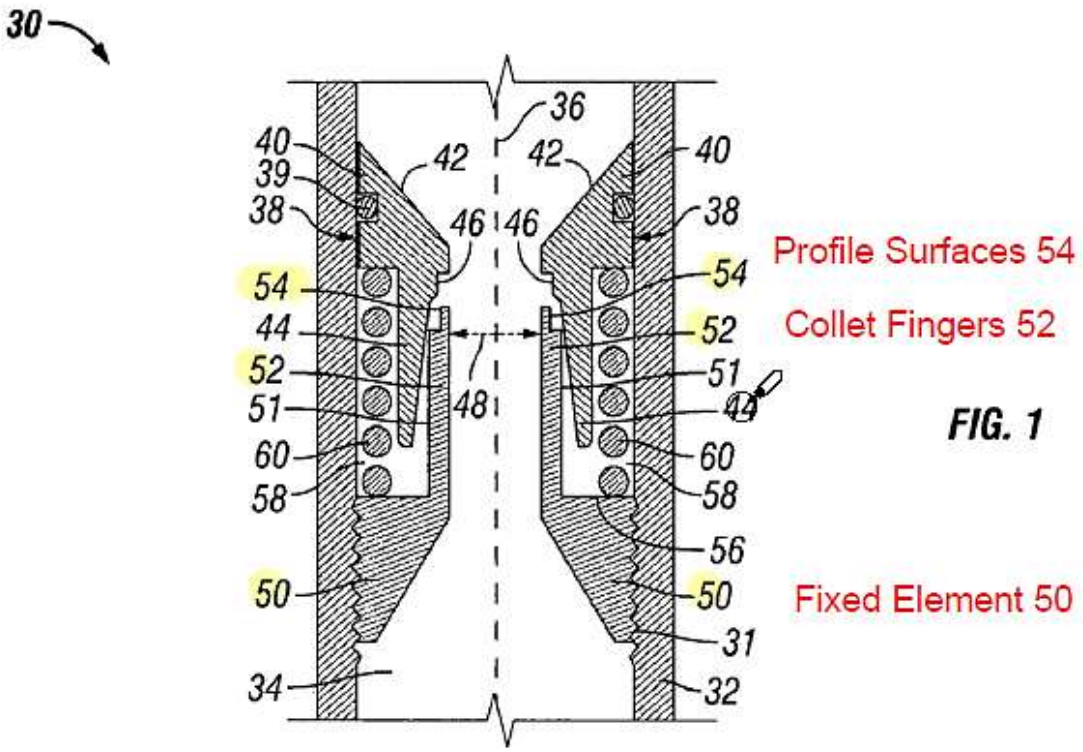

Ex. 1002, Fig. 1. Figure 1 is a cross-sectional view of ball seat 30 in the run-in position and has been annotated by the Board with yellow highlighting of 50, 52, and 54 and red text identifying fixed element 50, collet fingers 52, and profile surfaces 54. *Id.* ¶¶ 20, 31, 32, 35.

Regarding the second embodiment, Patent Owner contends "the structure that Petitioner identifies as satisfying the profile limitation of claim 1 is present only in the plugged 'seat' of King." *Id.* at 41 (citing Pet. 44–45; Ex. 1002, Fig. 6). Patent Owner also asserts "Mr. Gonzalez admitted that the 'profile' limitation of claim 1 is not present in the seat shown in Figure 5 of King," but "it is Figure 5, and not Figure 6, that shows a 'pluggable seat.'" *Id.* at 41 (citing Ex. 2005, 68:16–21, 147:12–24; Ex. 2010 ¶120).

Again, King discloses the same seat in Figures 5 and 6, i.e., "ball seat 230." Ex. 1002 ¶ 25 ("FIG. 6 is a partial cross-sectional view of the ball

seat shown in FIG.5 shown in the actuated position"), ¶ 31 (describing that "an additional embodiment" of "ball seat 230" is illustrated in "FIGS. 5–6"). Mr. Gonzalez's deposition testimony (Ex. 2005, 68:16–21, 147:12–24) simply reflects that "ball seat 230" has two positions, i.e., "the run-in position" and "the actuated position." *See, e.g.*, Ex. 1002 ¶¶ 24, 25. Figure 5 of King is reproduced below with annotations to show that the disputed element is present, contrary to Patent Owner's assertion.

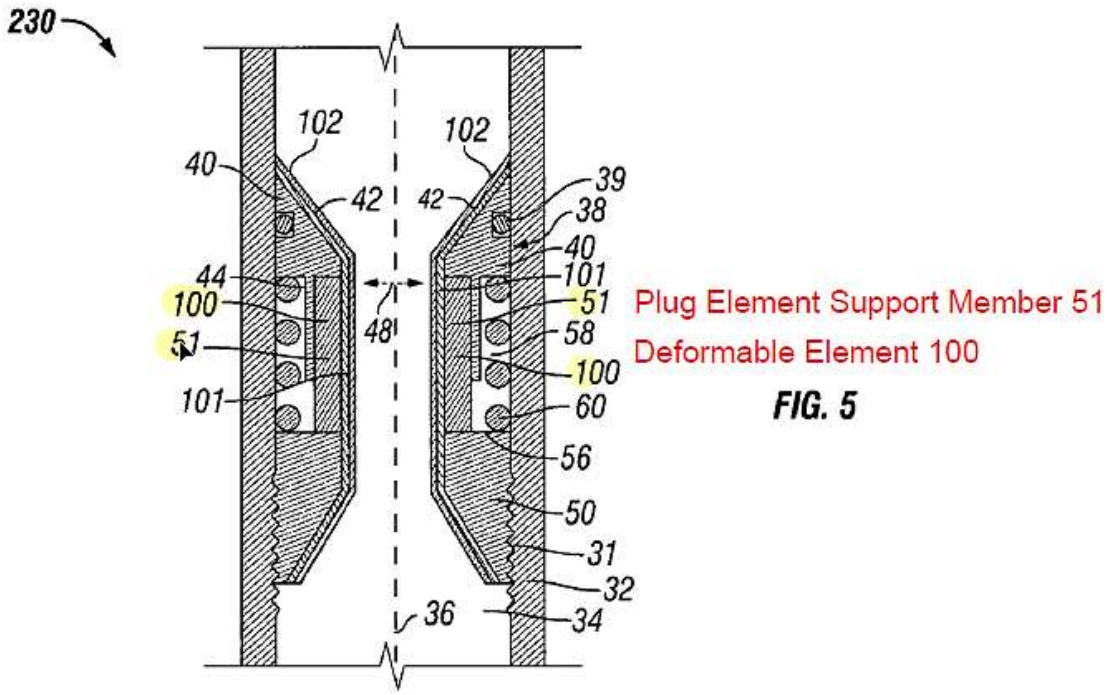

Ex. 1002, Fig. 5. Figure 5 is a cross-sectional view of ball seat 230 in the run-in position and has been annotated by the Board with yellow highlighting of 51 and 100 and red text identifying plug element support member 51 and deformable element 100. *Id.* ¶¶ 24, 43.

Regarding the second embodiment and the "second portion . . . having a radial dimension smaller that a smallest radial dimension of the first portion," Patent Owner asserts Mr. Gonzalez testified that "Figure 5 does not

show a second portion having a radial dimension smaller than a smallest radial dimension of the first portion." PO Resp. 41 (citing Ex. 2005, 113:17–114:14). However, Mr. Gonzalez clarifies the question pertains to only Figure 5. Ex. 2005, 114:12–13. Figure 6 shows diameter 59, which is smaller than diameter 48. Ex. 1002, Fig. 6; *see also id.* ¶ 44 (describing that "[d]ue to inner wall 101 and/or deformable element 100 being expanded laterally, a portion of the seat inner diameter *is reduced* from the first seat inner diameter 48 to the second seat inner diameter 59" (emphasis added)). Furthermore, although for the reasons discussed above with respect to claim construction, we determine that "disposed at" encompasses features or elements that are part of a single structure as well as features or elements that are connected or nearby. Under this construction, King's profile being on the surface of the claimed "second portion" is consistent with our determination as well as both parties' constructions. *See supra* § III.B.4. Diameter 59 in Figure 6, therefore, discloses the "radial dimension smaller that a smallest radial dimension of the first portion" recited in claim 1.

Finally, we turn to Patent Owner's argument that Petitioner does not identify the elements as arranged in the claim. PO Resp. 45–48. Patent Owner asserts Petitioner relies "on a combination of (1) elements it alleges are present in Figure 5 but not Figure 6 with (2) elements it alleges are present in Figure 6 but not Figure 5." PO Resp. 46. The only element Patent Owner asserts is missing from Figure 5 is the "profile" recited in claim 1, but as discussed above, we determined that Petitioner's arguments and evidence support a finding that plug element support member 51 and deformable element 100 are present in Figure 5. *Id.* ¶¶ 24, 43, Fig. 5.

Also, that the elements of King's ball seat 230 have different shapes depending on the whether the seat is in the run-in position or the actuated position does not overcome Petitioner's showing or the testimony of Mr. Gonzalez that King's ball seat 230 discloses all limitations of claim 1. Claim 1 recites "comprising." "Comprising" is a term of art used in claim language that means that the named elements are essential, but other elements also may be included to constitute additional components within the scope of the claim. *Genentech, Inc. v. Chiron Corp.*, 112 F.3d 495, 501 (Fed. Cir. 1997). King, for example, describes that the first portion, i.e., slidable element 40 is receptive to a runnable member, i.e., plug element 80 that is seatable against at a frustoconical surface of that first portion. Ex. 1002 ¶ 43, Fig. 2. After the ball is received, the first portion moves to the set position and compression causes an inward extension. *Id.* ¶ 44. That added feature, however, does not negate King's disclosure of the frustoconical surface of the first portion relating to Figure 5.

In summary, we agree with Petitioner's contentions, and we credit and give significant weight to the testimony of Mr. Gonzalez over the testimony of Mr. Watson as Mr. Gonzalez's testimony and Petitioner's contentions are consistent with the evidence cited therein. For the reasons given, we determine that Petitioner's arguments and evidence support a finding that King discloses element 1[d].

e. Conclusion—Claim 1

Upon consideration of the contentions and evidence presented by both parties, we find that Petitioner shows that all limitations of claim 1 are disclosed by the second embodiment of King in the manner arranged in the

claim. Accordingly, we determine that Petitioner has demonstrated by a preponderance of the evidence that claim 1 is anticipated by King. As to Petitioner's alternative argument, we also determine that Petitioner has demonstrated by a preponderance of the evidence the claim 1 is obvious over each of the first and second embodiments of King in combination with Haugen. "It is well settled that 'anticipation is the epitome of obviousness.'" *In re McDaniel*, 293 F.3d 1379, 1385 (Fed. Cir. 2002) (quoting *Connell v. Sears, Roebuck & Co.*, 722 F.2d 1542, 1548 (Fed. Cir. 1983)).

4. Independent Claim 11

Independent claim 11 is similar to claim 1. Petitioner's showing with respect to claim 11 is similar to its showing with respect to claim 1 and, indeed, Petitioner references its contentions for claim 1. *See, e.g.*, Pet. 38, 39, 48, 49. Petitioner sufficiently accounts for all differences between the two claims. For instance, with respect to the recitation of "a ball being runnable within the tubular" in claim 11, Petitioner points to King's Figures 2 and 6 and related teachings. *Id.* at 36, 47, 48 (citing *e.g.*, Ex. 1002 ¶ 48, Figs. 2, 6; Ex. 1025 ¶¶ 68, 101). King, for example, discloses that "plug element 80 is a ball." Ex. 1002 ¶ 48.

Regarding the recitation of "an actuator disposed at the tubular" in claim 11, Petitioner points to King's slidable element 40 and cites the testimony of Mr. Gonzalez. Pet. 36, 48 (citing *e.g.*, Ex. 1002 ¶¶ 13, 38, 44, 59, Figs. 2, 6; Ex. 1025 ¶¶ 69, 102). Petitioner, additionally, asserts tubular actuators are admitted prior art. *Id.* at 37 (citing Ex. 1023, 7). King, for example, discloses slidable element 40 sliding along the housing inner wall surface as the pressure of the fluid increases against plug element 80 and

"[a]fter actuation of a downhole tool by the increased pressure of the fluid above plug element 80 . . . ." Ex. 1002 ¶¶ 57–59.

Relying on the testimony of Mr. Watson, Patent Owner asserts:

> Specifically, Petitioner identifies slidable element 40 as the actuator recited in claim 11. Petition at 36. However, Petitioner identifies the "seat" as the whole of the structure referred to by King as the "ball seat 30." *Id.* at 37–39. As identified by Petitioner, therefore, the "seat" is not "disposed at the actuator," as recited in the claim. Instead, the actuator makes up only a part of the much larger assembly that Petitioner identifies as the seat. Ex. 2010, ¶¶131–133.

PO Resp. 27–28 (citing Ex. 2010 ¶¶ 131–133).

The issue before us pertains to the meaning of "disposed at," which we discussed in Section III.B.4 with respect to claim construction. We determine that "disposed at" encompasses features or elements that are part of a single structure as well as features or elements that are connected or nearby. *See supra* § III.B.4. We determine "a seat disposed at the actuator" encompasses a seat and an actuator that are part of a single structure.[12] We, therefore, are persuaded by Petitioner's showing and determine that Patent Owner's arguments and evidence do not overcome Petitioner's showing.

Consistent with Petitioner's contentions and Mr. Gonzalez's testimony, King describes the result of forcing the ball into the seat as "fluid pressurization above the ball [perform[ing] its intended function, e.g., *actuation* of a downhole tool." Ex. 1002 ¶ 13 (emphasis added). King describes that actuation is performed by slidable element 40, "[a]s fluid

---

[12] Patent Owner's proposed amendment further supports that "a seat disposed at the actuator" encompasses a seat and an actuator that are part of a single structure. *See infra* § III.F.2.

pressure is exerted downward onto plug element 80, slidable element 40 is forced downward, compressing return member 60 against retainer wall surface 56 until stop member 44 contacts retainer wall surface 56." *Id.* ¶ 38. Regarding the second embodiment, King describes that "slidable element 40 moves from the run-in position (FIG. 5) to the set position (FIG. 6)." King's disclosure is consistent in describing "[i]n the embodiments shown in FIGS. 1–10, slidable element 40 slides along the housing inner wall surface causing movement of plug element support member 51 downward" and King refers to this as "*actuation* of a downhole tool by the increased pressure of the fluid above plug element 80." *Id.* ¶¶ 58–59 (emphasis added). We also agree with Petitioner that "a seat disposed at the actuator" was known prior art. Pet. 37; Ex. 1023, 7.

In summary, we agree with Petitioner, and we credit and give significant weight to the testimony of Mr. Gonzalez because both are consistent with the evidence of record, including King's disclosures and teachings above. For the reasons given and on the complete record before us, we determine that Petitioner has demonstrated by a preponderance of the evidence that claim 11 is anticipated by the second embodiment of King. We also determine that Petitioner has demonstrated by a preponderance of the evidence that claim 11 is obvious over each of the first and second embodiments of King in combination with Haugen.

5. Dependent Claims 5 and 12

Claim 5 depends directly from claim 1 and further recites "wherein the runnable member is a ball." Ex. 1001, 4:21–22. Claim 12 depends

directly from claim 11 and further recites "wherein the ball is deformable." *Id.* at 4:49–50.

For claim 5, as was discussed *supra* in Section II.C.4 with respect to independent claim 11, King discloses that a ball is used to plug the seat. Pet. 35, 46 (citing *e.g.*, Ex. 1002 ¶¶ 2, 6, 48, Fig. 6; Ex. 1025 ¶¶ 61, 62, 91, 92). For claim 12, Petitioner points to King's disclosure relating to plug element 80. *Id.* at 40, 50 (citing Ex. 1002 ¶¶ 9, 10, 38; Ex. 1025 ¶ 77, 107, 108).

King, for example, discloses

> [a]s shown in FIG. 2, collet fingers 52 are not required to contact plug element 80; however, as pressure above plug element 80 increases, plug element 80 *may begin to deform* and be extruded through seat inner diameter 59. As plug element 80 *deforms* and is extruded through seat inner diameter 59, plug element 80 may contact with, and be additionally supported by, collet fingers 52.

Ex. 1002 ¶ 38 (emphases added).

Patent Owner does not argue dependent claims 5 and 12 separately. *See generally* PO Resp. We agree with Petitioner and we credit and give significant weight to the testimony of Mr. Gonzalez because both are consistent with the evidence of record, including King's disclosures and teachings above. For the reasons given and on the complete record before us, we determine that Petitioner has demonstrated by a preponderance of the evidence that claims 5 and 12 are anticipated by the second embodiment of King. We also determine that Petitioner has demonstrated by a preponderance of the evidence that claims 5 and 12 are obvious over each of the first and second embodiments of King in combination with Haugen.

6. Dependent Claim 6

Claim 6 depends directly from claim 1 and further recites "wherein the radial dimension is a radius." Ex. 1001, 4:23–24. Petitioner references its contentions for claim 1 discussed *supra* in Section II.C.3 and, further, points to King's disclosure of inner diameter 59. Pet. 35, 46 (citing *e.g.*, Ex. 1002 ¶ 37; Ex. 1025 ¶¶ 63, 64, 93, 94).

Patent Owner does not argue dependent claim 6 separately. *See generally* PO Resp. We agree with Petitioner, and we credit and give significant weight to the testimony of Mr. Gonzalez because both are consistent with the evidence of record, including King's disclosures and teachings above. For the reasons given and on the complete record before us, we determine that Petitioner has demonstrated by a preponderance of the evidence that claim 6 is anticipated by the second embodiment of King. We also determine that Petitioner has demonstrated by a preponderance of the evidence that claim 6 is obvious over each of the first and second embodiments of King in combination with Haugen.

7. Dependent Claims 10 and 13

We turn to Petitioner's contentions that dependent claims 10 and 13 are anticipated by King. Petitioner asserts that only the second embodiment of King discloses each limitation of claims 10 and 13. Pet. 6, 7.

Claim 10 depends directly from claim 1 and claim 13 depends directly from claim 11. Claim 10 recites "wherein *the profile includes a material attached* thereto configured to *increase friction* between the runnable member and the profile." Ex. 1001, 4:30–31 (emphases added). Claim 13 similarly recites "wherein *the profile includes a material attached* to the seat

that has a *greater coefficient of friction* with the ball than a material the seat is made of." *Id.* at 4:51–54 (emphases added).

Petitioner points to King's layer 102 attached to plug element support member 51. Pet. 46, 47, 50, 51 (citing *e.g.*, Ex. 1002 ¶¶ 7, 42, 46, Figs. 5, 6; Ex. 1025 ¶¶ 95–97, 109–112). King discloses "layer 102 may be a *non-slip coating* applied to plug element engagement surface 42." Ex. 1002 ¶ 46.

Patent Owner does not argue dependent claims 10 and 13 separately. *See generally* PO Resp. We agree with Petitioner, and we credit and give significant weight to the testimony of Mr. Gonzalez because both are consistent with the evidence of record, including King's disclosures and teachings above. For the reasons given and on the record before us at this juncture, we determine that Petitioner has demonstrated by a preponderance of the evidence that claims 10 and 13 are anticipated by the second embodiment of King. We also determine that Petitioner has demonstrated by a preponderance of the evidence that claims 10 and 13 are obvious over each of the first and second embodiments of King in combination with Haugen.

D. Obviousness over Schasteen and Haugen

Petitioner asserts claims 1, 5, 6, 11, and 12 are unpatentable, under 35 U.S.C. § 103(a), as obvious over Schasteen and Haugen. Pet. 52–57. The disclosure of Schasteen is similar to that of the first embodiment of King. Additionally, Petitioner's contentions and the testimony of Mr. Gonzalez are similar. Pet. 52–57; Ex. 1025 ¶¶ 114–118.

We agree with Petitioner, and we credit and give significant weight to the testimony of Mr. Gonzalez because both are consistent with the evidence

of record, including Schasteen's and Haugen's disclosures and teachings above. Pet. 52–57; Ex. ¶¶ 114–125; *see also supra* § III.C. With respect to Schasteen and independent claims 1 and 11, Patent Owner asserts that Petitioner improperly relies on "components that are connected to the body that receives a ball" for the "second portion" and "profile." PO Resp. 49–50. As discussed above, we determine that "body" is used as another term for a structure, and encompasses joining two distinct objects or pieces by welding, soldering, brazing, or fastening. *See supra* § III.B.3. Petitioner's contentions and Mr. Gonzalez's testimony (Pet. 52–57; Ex. ¶¶ 114–125) are consistent with Schasteen's description of ball seat 30 comprising elements that are attached by a threaded fastening. Ex. 1004 ¶¶ 27, 32.

Patent Owner also asserts that "**[t]he identified seat is not 'positionable within a tubular,' as recited in claim 1**." PO Resp. 53. Contrary to Patent Owner's arguments and Mr. Watson's testimony, however, claim 1 recites "a first portion, positionable within a tubular," and does not require that the entire seat be positioned within the tubular. Ex. 1001, 3:56. We agree with Petitioner, and credit the testimony of Mr. Gonzalez over the testimony of Mr. Watson that King's first portion is shown as being within a tubular body as Petitioner's argument and Mr. Gonzalez's testimony are consistent with Schasteen's disclosure cited therein.

Regarding claim 11, Patent Owner also asserts that the Petition does not identify any structure as being an actuator. PO Resp. 54–55. Petitioner points to actuating elements of Schasteen's ball seat 30. Pet. 55; Ex. 1025 ¶ 121. Consistent with Petitioner's contentions and

Mr. Gonzalez's testimony (*id.*), Schasteen discloses "actuat[ing] the downhole tool." Ex. 1004 ¶ 34; *see also id.* ¶ 27 (stating that Figures 1 and 2 illustrate ball seat 30), ¶ 23 (describing Figure 2 as a "partial cross-sectional view of the ball seat shown in FIG. 1 shown in the *actuated* or set position" (emphasis added)).

Patent Owner also relies on contentions that correspond to those presented for obviousness over King and Haugen. PO Resp. 51–53. We determine Patent Owner's contentions do not overcome Petitioner's showing for the same reasons discussed with respect to obviousness of claims 1, 5, 6, 11, and 12 over King and Haugen. *See supra* § III.C.

For the reasons given and on the complete record before us, we determine Petitioner has demonstrated by a preponderance of the evidence that claims 1, 5, 6, 11, and 12 would have been obvious over Schasteen and Haugen.

E. Remaining Grounds

We turn to the parties' contentions regarding the remaining grounds, which are set forth below. Pet. 57–74.

Claims Challenged	**35 U.S.C. §**	**Reference(s)/Basis**
1, 5, 6, 10, 11	§ 102	Bhavsar
1, 5, 6, 10–13	§ 103	Fehr, Ahlen, Bailey, Buske
1, 5, 6, 10–13	§ 103	Fehr, Ahlen, Buske
1, 5, 6, 10, 11, 13	§ 103	Hutchison, Ahlen, Buske
1, 5, 6, 10, 11, 13	§ 103	Hutchison, Ahlen, Bailey, Buske

At the institution stage, we stated the following:

> Because we determine that Petitioner has shown a reasonable likelihood that it would prevail in establishing that King anticipates the challenged claims, we institute on all claims and all grounds in the Petition. *See Guidance on the Impact of SAS on AIA Trial Proceedings* (April 26, 2018), available at https://www.uspto.gov/patents-application-process/patent-trial-and-appeal-board/trials/guidance-impact-sas-aia-trial. That we do not address in further detail Patent Owner's arguments regarding these grounds does not constitute a determination regarding the sufficiency of Petitioner's contentions presented.

Inst. Dec. 30–32.

Based on the complete record before us, for the remaining grounds we determine that Petitioner has not provided sufficient element-by-element analysis, and the contentions in the Petition are underdeveloped. For example, Petitioner's contentions relating to anticipation of claim 1 by Bhavsar total only two pages including one annotated figure, do not mention the claim recitations, and include a string of citations of excerpts of Bhavsar that are not sufficiently linked to specific claim limitations. Pet. 57–59 (citing Ex. 1005 ¶¶ 3, 10, 13, 32, 42, 59, Fig. 4). The remaining grounds presented by Petitioner similarly are underdeveloped including generalized contentions that do not clearly identify what teachings in the prior art Petitioner asserts to pertain to particular claim limitations. Pet. 61–74. Petitioner also does not specify with sufficient clarity what combination of teachings or modifications of teachings Petitioner relies upon as describing each claim element. *Id.* Petitioner instead asserts obviousness over "**Fehr in view of Ahlen, Bailey, and/or Burke**" and obviousness over "**Hutchison in view of Ahlen, Bailey, and/or Burke**" and relies on summaries of individual prior art references and a bullet point list without specifying a

particular combination or modification of teachings. *Id.* The asserted references (*id.* at 57–74) are not so similar to King that Petitioner can rely solely upon its element-by-element analysis for King. Also, at least certain of the coatings relied on by Petitioner for the "profile" do not meet the functional limitations recited in the claims.

We determine that Petitioner has not demonstrated by a preponderance of evidence that any challenged claims are unpatentable on the following bases: (1) anticipation by Bhavsar, (2) obviousness over Fehr and Ahlen, Bailey, and/or Buske, and (3) obviousness over Hutchison and Ahlen, Bailey, and/or Buske.

F. Patent Owner's Motion to Amend

We have concluded that the challenged claims of the '829 Patent are unpatentable. Therefore, we address Patent Owner's contingent motion to enter proposed substitute claims 15–28. *See generally* Mot. to Amend.[13] For the reasons that follow, Patent Owner's motion is denied.

In reviewing a motion to amend, we consider whether the motion meets the statutory and regulatory requirements set forth in 35 U.S.C. § 316(d) (2012) and 37 C.F.R. § 42.121 (2019). *Lectrosonics, Inc. v. Zaxcom, Inc.*, IPR2018-01129, Paper 15 (PTAB Feb. 25, 2019) (precedential) ("*Lectrosonics*"). We also consider unpatentability. In that regard, the patent owner "does not bear the burden of persuasion to

---

[13] Petitioner filed an Opposition to Patent Owner's Motion to Amend (Paper 23, "MTA Opp."). Patent Owner filed a Reply to Petitioner's Opposition to the Motion to Amend (Paper 28, "MTA Reply"). Petitioner filed a Sur-Reply to Patent Owner's Reply to the Opposition to the Motion to Amend (Paper 33, "MTA Sur-Reply").

demonstrate the patentability of [the proposed] substitute claims." *Lectrosonics* at 4 (citing *Aqua Prods., Inc. v. Matal*, 872 F.3d 1290 (Fed. Cir. 2017); *Bosch Auto. Serv. Sols. LLC v. Iancu*, 878 F.3d 1027 (Fed. Cir. 2017)). "Rather, as a result of the current state of the law and [U.S. Patent and Trademark Office] rules and guidance, the burden of persuasion will ordinarily lie with the petitioner to show that any proposed substitute claims are unpatentable by a preponderance of the evidence." *Lectrosonics* at 4.

For the reasons below, we determine that Petitioner has established by a preponderance of the evidence that the proposed substitute claims would have been obvious. Because we determine that Petitioner establishes by a preponderance of the evidence that the proposed substitute claims would have been obvious, we do not address whether the Motion to Amend complies with the statutory and regulatory requirements.

1. Proposed substitute claims

Proposed substitute independent claims are set forth below, with additions shown in underlining.

> 15. (Substitute for Claim 1)
>
> A pluggable seat, comprising:
>
> a first portion, positionable within a tubular, being receptive to a runnable member seatable thereagainst at a frustoconical surface thereof;
>
> a second portion positioned downstream of the first portion, downstream being defined as a direction that the runnable member is moved into seating engagement with the pluggable seat, having a radial dimension smaller than a smallest radial dimension of the first portion; and
>
> a profile disposed at the second portion configured to increase resistance to extrusion of a runnable member past the

> pluggable seat in comparison to the same pluggable seat without the profile;
>
> wherein the first portion and the second portion form an integral body.
>
> 25. (Substitute for Claim 11)
>
> A tubular actuating system, comprising:
>
> a tubular;
>
> a ball being runnable within the tubular;
>
> an actuator disposed at the tubular;
>
> a seat disposed at, and integral with, the actuator having a first diameter smaller than the ball diameter being seatingly receptive to the ball at a frustoconical surface of a first portion thereof; and
>
> a profile disposed at a second portion of the seat having a second diameter that is smaller than the first diameter and positioned downstream of the first portion, downstream being defined as a direction that the ball is moved into seating engagement with the seat, the profile being configured to require greater pressure to extrude the ball therepast than pressure required to extrude the ball past the first portion.

Mot. to Amend 28, 30.

2. Discussion—Obviousness

Petitioner asserts that each of the second embodiment of King and Schasteen expressly disclose "integral" ball seats. As discussed *supra* in Section III.C, Petitioner has shown by a preponderance of the evidence that the original claims are unpatentable as anticipated by the second embodiment of King alone or obvious over the second embodiment of King and Haugen. We also determine Petitioner has demonstrated by a preponderance of the evidence that claims 1, 5, 6, 11, and 12 would have been obvious over Schasteen and Haugen. *See* Section III.D *supra*.

We turn to "wherein the first portion and the second portion form an integral body" recited in proposed substitute claim 15 and "a seat disposed at, and integral with, the actuator" recited in proposed substitute claim 25. As we explained in the discussion of "body" used within the construction of "seat" (*see supra* § III.B.3), similar words have not been confined to mean one piece. *Hotte*, 475 F.2d at 647 ("As indicated by the board, 'integral' is sufficiently broad to embrace constructions united by such means as fastening and welding" (citing *Henderson v. Grable*, 339 F.2d 465 (CCPA 1964))); *3M Innovative Props.*, 2010 WL 5067449 at *5 (construing the term "integrated unit" to mean "a unit wherein the recited component parts are or can be combined into a unified structure"). Those similar words include parts that are "integral" and "integrated." *Id.* For the same reasons given above with respect to the construction of "seat" and "body" ((*see supra* § III.B.3) we determine that Patent Owner's proposed amendments do not further limit the claims. Additionally, Patent Owner's proposed amendment "a seat disposed at, and integral with, the actuator" recited in proposed substitute claim 25 provides further support for our determination that "disposed at" encompasses features or elements that are part of a single structure. *See supra* § III.B.4.

Each of proposed substitute claims 16–24 corresponds to claims 2–10, except each has been amended to depend, directly or indirectly, from proposed substitute claim 15. Mot. to Amend 28–30. Each of proposed substitute claims 26–28 corresponds to claims 12–14, except each has been amended to depend, directly or indirectly, from proposed substitute claim 25. *Id.* at 30–31.

Based on the complete record before us, Petitioner has shown how the second embodiment of King alone or the first and second embodiments of King in combination with Haugen discloses or at least teaches each limitation of the proposed substitute claims and we agree with Petitioner's reasoning to combine. Also, Petitioner has shown Schasteen in combination with Haugen teaches each limitation of the proposed substitute claims and articulates reasoning to combine with a rational underpinning as to why one of ordinary skill in the art would have combined the teachings of the asserted art in the manner proposed.

3. Conclusion

For the reasons given, we determine that Petitioner has shown by a preponderance of the evidence that the proposed substitute claims would have been obvious over the asserted art. Accordingly, Patent Owner's Motion to Amend is *denied*.

IV. CONCLUSION

We determine that Petitioner has demonstrated by a preponderance of evidence that claims 1, 5, 6, and 10–13 are unpatentable.[14] In summary:

---

[14] Should Patent Owner wish to pursue amendment of the challenged claims in a reissue or reexamination proceeding subsequent to the issuance of this decision, we draw Patent Owner's attention to the April 2019 *Notice Regarding Options for Amendments by Patent Owner Through Reissue or Reexamination During a Pending AIA Trial Proceeding*. *See* 84 Fed. Reg. 16,654 (Apr. 22, 2019). If Patent Owner chooses to file a reissue application or a request for reexamination of the challenged patent, we remind Patent Owner of its continuing obligation to notify the Board of any such related matters in updated mandatory notices. *See* 37 C.F.R. § 42.8(a)(3), (b)(2).

Claims	35 U.S.C. §	Basis	Claims Shown Unpatentable	Claims Not shown Unpatentable
1, 5, 6, 11, 12	§ 102	King (first embodiment)		1, 5, 6, 11, 12
1, 5, 6, 11, 12	§ 103	King (first embodiment), Haugen	1, 5, 6, 11, 12	
1, 5, 6, 10–13	§ 102	King (second embodiment)	1, 5, 6, 10–13	
1, 5, 6, 10–13	§ 103	King (second embodiment), Haugen	1, 5, 6, 10–13	
1, 5, 6, 11, 12	§ 103	Schasteen, Haugen	1, 5, 6, 11, 12	
1, 5, 6, 10, 11	§ 102	Bhavsar		1, 5, 6, 10, 11
1, 5, 6, 10–13	§ 103	Fehr, Ahlen, Bailey, Buske		1, 5, 6, 10–13
1, 5, 6, 10–13	§ 103	Fehr, Ahlen, Buske		1, 5, 6, 10–13
1, 5, 6, 10, 11, 13	§ 103	Hutchison, Ahlen, Buske		1, 5, 6, 10, 11, 13
1, 5, 6, 10, 11, 13	§ 103	Hutchison, Ahlen, Bailey, Buske		1, 5, 6, 10, 11, 13
Overall Outcome			1, 5, 6, 10–13	

In summary with respect to the Motion to Amend:

Motion to Amend Outcome	Claims
Original Claims Cancelled by Amendment	
Substitute Claims Proposed in the Amendment	15–28
Substitute Claims: Motion to Amend Granted	
Substitute Claims: Motion to Amend Denied	15–28
Substitute Claims: Not Reached	

V. ORDER

In consideration of the foregoing, it is hereby:

ORDERED that claims 1, 5, 6, and 10–13 of the ’829 Patent have been proven to be unpatentable;

FURTHER ORDERED that Patent Owner’s Contingent Motion to Amend is *denied*; and

FURTHER ORDERED that because this is a Final Written Decision parties to the proceeding seeking judicial review of the Decision must comply with the notice and service requirements of 37 C.F.R. § 90.2.

PETITIONER:

Wasif H. Qureshi
wqureshi@jw.com

Christopher Rourk
crourk@jw.com

Jackson Walker LLP
1401 McKinney Street, Suite 1900
Houston, TX 77010

PATENT OWNER:

Herbert D. Hart III
hhart@mcandrews-ip.com

Steven Hampton
shampton@mcandrews-ip.com

Peter Lish
plish@mcandrews-ip.com

McANDREWS, HELD & MALLOY, LTD.
500 West Madison St., Suite 3400
Chicago, IL 60661