Trials@uspto.gov
Tel.: 571.272.7822

Paper No. 26
Entered: January 21, 2020

UNITED STATES PATENT AND TRADEMARK OFFICE

BEFORE THE PATENT TRIAL AND APPEAL BOARD

BEDRA INC., BERKENHOFF GMBH,
and POWERWAY GROUP CO. LTD.,
Petitioners,

v.

KI-CHUL SEONG,
Patent Owner.

IPR2018-01415
Patent 8,822,872 B2

Before CARL M. DeFRANCO, CHRISTOPHER G. PAULRAJ, and RYAN H. FLAX, *Administrative Patent Judges*.

FLAX, *Administrative Patent Judge*.

JUDGMENT
Final Written Decision
Determining All Challenged Claims Unpatentable
35 U.S.C. § 318(a)

I. INTRODUCTION

Ki-Chul Seong ("Patent Owner" or "Seong") is the first-named inventor and owner of U.S. Patent 8,822,872 B2 ("the '872 patent"). Bedra Inc., Berkenhoff GmbH, and Powerway Group Co. Ltd. ("Petitioner" or "Bedra") filed a Petition requesting *inter partes* review of claims 1–13 and 15 of the '872 patent (claim 14 was not included). Paper 1 ("Pet."). Patent Owner filed a Preliminary Response and a Patent Owner's Response to Petition. Paper 10 ("Prelim. Resp."); Paper 15 ("PO Resp."). Thereafter, Petitioner filed a Reply (Paper 18, "Pet. Reply"), and Patent Owner filed a Sur-Reply (Paper 19, "PO Sur-Reply").

In addition, Patent Owner filed a Contingent Motion to Amend proposing a new claim 16 (as a substitute for claim 10) and a new claim 17 (as a substitute for claim 11). Paper 16 ("Mot. Amend"). Petitioner opposed this Motion. Paper 17 ("Pet. Opp. Mot. Amend"). Patent Owner filed a related Reply (Paper 20, "PO Reply Mot. Amend"), and Petitioner filed a related Sur-Reply (Paper 23, "Pet. Sur-Reply Mot. Amend").

A hearing was conducted on October 21, 2019, where the parties presented oral argument. Paper 25 ("Hr'g Tr."). Among other things, at oral argument Patent Owner expressly abandoned proposed substitute claim 17 set forth in the Motion to Amend. Hr'g. Tr. 40:17–41:10. Furthermore, at oral argument Patent Owner expressly conceded the unpatentability of claims 1, 6–9, 13, and 15 under the grounds of unpatentability set forth in the Petition. *Id.* at 40:1–16.

We have jurisdiction under 35 U.S.C. § 6. After considering the parties' arguments and supporting evidence, we conclude that Petitioner has proved by a preponderance of the evidence that claims 1–13 and 15 of the

’872 patent are unpatentable. 35 U.S.C. § 316(e). Petitioner has also carried its burden in showing that Patent Owner’s proposed substitute claim 16 is, likewise, unpatentable. *Id*. Thus, we deny Patent Owner’s Motion to Amend.

II. BACKGROUND

A. RELATED MATTERS

Seong (and OPEC Engineering Co. Ltd, dba OPECMADE, Inc., a licensee of the ’872 patent and an identified real party-in-interest (*see* Paper 8)) asserted the ’872 patent against Bedra, Inc., among others, in Civil Action No. 1:18-cv-00396 in the Northern District of Illinois on January 18, 2018. That civil action was stayed by order of the court on August 27, 2018, until a final decision is rendered in this case before the Board, as well as in three other *inter partes* review proceedings concerning other patents asserted in the district court litigation along with the ’872 patent.[1]

B. THE ’872 PATENT

The ’872 patent issued on September 2, 2014, from application serial number 13/442,615, filed on April 9, 2012, and claims priority to Korean patent application KR 10-2011-0040757, indicated as having been filed on April 29, 2011. Ex. 1001, codes (45), (21), (22), (65). The ’872 patent is entitled “Electrode Wire for Electro-Discharge Machining and Method for Manufacturing the Same” and is generally directed to

> an electrode wire for electro-discharge machining and a method for manufacturing the same, capable of reducing machining particles generated when an electrode wire is subject to the

[1] The other IPRs and patents are: (1) IPR2018-00666 regarding US Patent 6,306,523 B1; (2) IPR2018-00667 regarding US Patent 6,482,535 B2; and (3) IPR2018-00668 regarding US Patent 6,492,036 B2. We note, each of these IPRs have terminated; none having been instituted.

> electro-discharge machining and improving the machining speed and the surface roughness of a workpiece.

Id. at 1:11–16. Electro-discharge machining, also referred to as "EDM," is a technology where a wire, called an "electrode wire," is used to precisely cut a "workpiece," e.g., a mass of metal, by inserting the wire into the workpiece through a start hole and then applying a high-frequency voltage between the wire and the inner wall surface of the workpiece. *Id*. at 1:18–23. The wire is continuously fed through the workpiece and an arc is generated between the wire and workpiece, which melts and, thereby, precisely cuts the workpiece as the wire is moved across the workpiece. *Id*. at 1:23–31. Figure 1 of the '872 patent illustrates such a process; it is reproduced below:

FIG 1

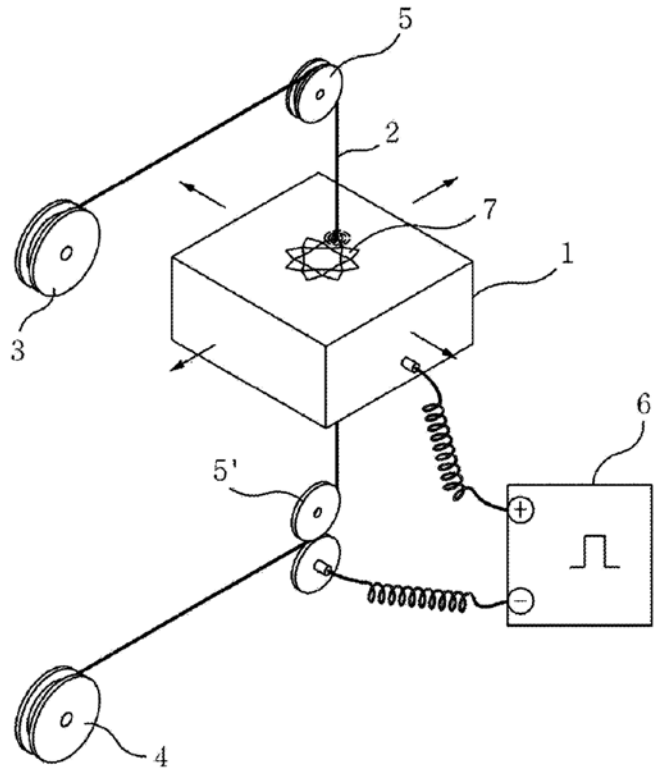

Figure 1 of the ’872 patent shows electrode wire 2 inserted into workpiece 1, cutting a pattern into the workpiece as a high frequency voltage is applied between the workpiece and wire and the workpiece and wire are moved with respect to one another. *Id.* at 1:18–53.

As EDM technology progressed over the years, the electrode wires evolved from being pure copper to being brass, an alloy composed of copper and zinc, which improved EDM wires by more than doubling their tensile strength and improving discharge stability and instantaneous vaporization power, which improved machining speed and precision. *Id*. at 1:63–2:11.

As background, the ’872 patent describes that prior electrode wires had a copper-containing core, a first alloy layer there-over, formed by diffusing a second metal into an outer portion of the core, and a second alloy plated layer over the first, formed by diffusing metal from the core into a plated layer, which was formed, for example, in a zinc plating bath at a temperature of 400–500°C, for a period of 1–10 seconds. *Id.* at 1:17–3:56 (“Background of the Invention” including “Description of the Related Art”). The ’872 patent’s Background section further describes that such a second alloy plated layer of an electrode wire was harder (e.g., β brass, having 40% or more zinc, which is brittle and weak, a trait exhibited during fine wire processing) than the underlying core and first alloy layer material, which caused cracks to form in the second alloy plated layer in a perpendicular direction relative to the longitudinal (lengthwise) direction of the electrode wire (i.e., circumferentially directional cracks) during the drawing (fine wire processing) of the electrode wire. *Id.* The ’872 patent’s Background section further describes that heat treatment processing was performed on an electrode wire after forming such (circumferentially directional) cracks to

stabilize a mechanical characteristic of the electrode wire; for example, such electrode wires have a 510 N/mm^2 tensile strength. *Id.*

Consistent with the ’872 patent’s Specification, the patent’s independent claims 1 and 9, and dependent claims 2 and 10 (and proposed replacement claim 16), are directed to an electrode wire for electro-discharge machining and a method of manufacturing such a wire, where the wire has a “a core wire” of “a first metal,” “a first alloy layer” formed “due to [the] mutual diffusion between the core wire and [a] second [plated] metal,” and “a second alloy layer” over the first alloy layer, “formed . . . due to diffusion of the first metal to the second metal.” *Id.* at 16:20–49, 17:9–18:6; Mot. Amend 32. Cracks are formed through the second alloy layer by “twisting the wire with a plurality of rollers,” and the core wire material “is erupted onto a surface of the electrode wire” and forms “grains” (including the core and second alloy materials, and, in the case of claims 2 and 10, also the first alloy material) along/through the cracks. Ex. 1001, 16:20–49, 17:9–18:6; *see al*so Mot. Amend 32 (proposed claim 16).

The ’872 patent explains that this twisting is accomplished with a twist unit. *See, e.g.*, Ex. 1001, 9:3–12, 12:38–43, 15:13–19. According to the Specification, “FIG. 2 [reproduced below] is a view showing a method for manufacturing an electrode wire for electro-discharge machining according to the present invention.” *Id.* at 7:33–35.

FIG 2

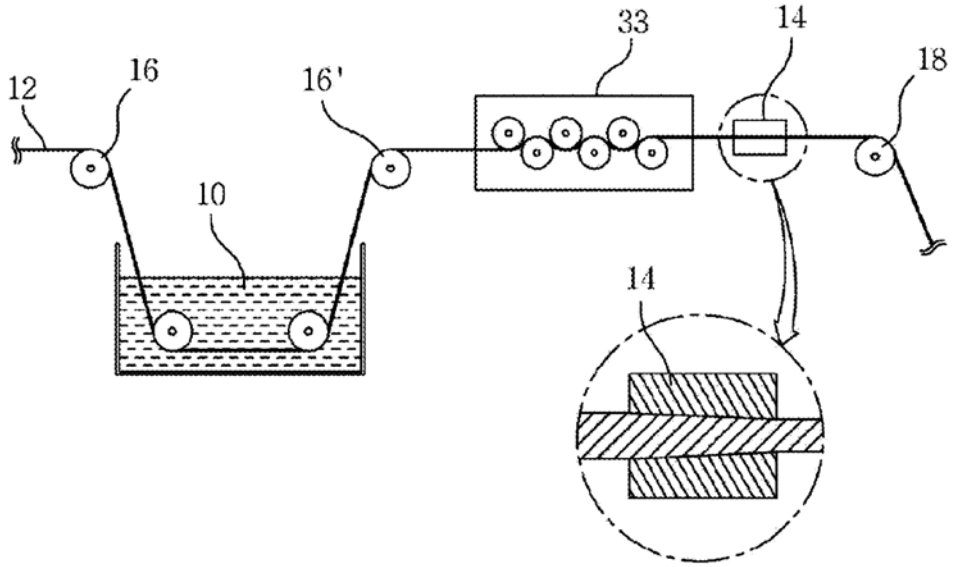

Figure 2 shows wire core 12 of brass (65% copper, 35% zinc), passed over roller 16 into plating bath 10 of zinc, which coats wire core 12 with a zinc coating, and next shows wire core 12 passed over another roller 16' to twist unit 33 having more rollers (unlabeled) therein, which curve the wire 12 up, down, left, and right, causing material eruption through cracks in the wire to form grains, followed by passing wire 12 to drawing unit 14 (shown to thin the wire) and then over another roller 18. *Id.* at 8:4–9:11.

The Specification of the ’872 patent includes several photographs of an exemplary wire of an embodiment as claimed and also includes a schematic cross-sectional drawing of such a wire, illustrating the claimed cracking and erupted material; Figures 6 (in-part) and 10 are reproduced, side-by-side, below:

FIG 6

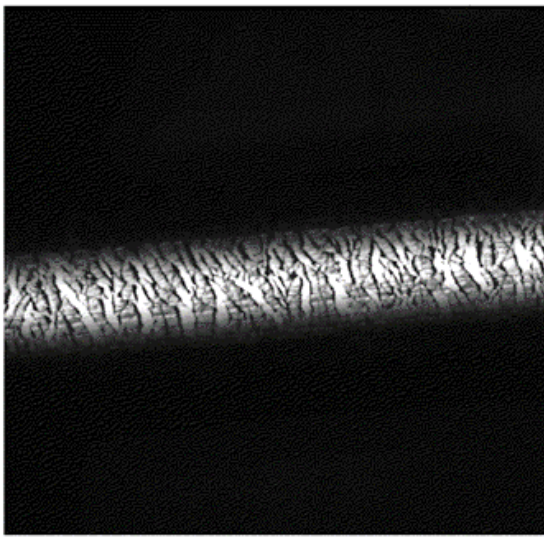

FIG 10

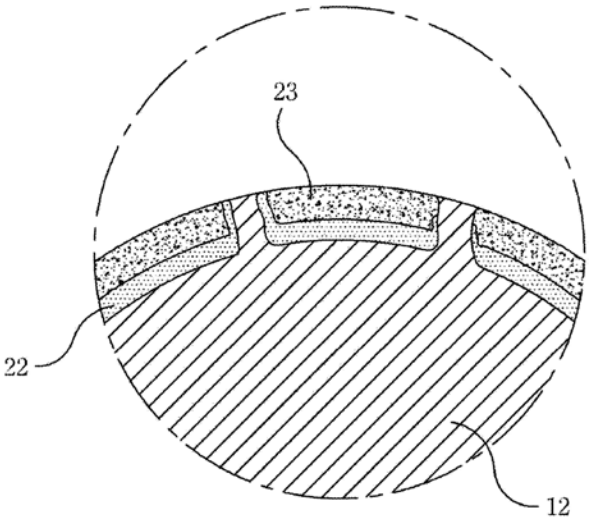

Figure 6, above-left, is an unlabeled photograph of a magnified wire extending horizontally across the image. *Id.* at 7:45–46. The wire at Figure 6 is shown to have a multitude of cracks (the darker lines) that extend substantially (although not exclusively) circumferentially across the wire. *Id.* at 9:19–25, 10:8–19, 15:44–51. Figure 10, above-right, shows a drawing of a partial cross-section of a wire having wire core 12, first alloy layer 22, and second alloy layer 23; an island of the latter two materials 22, 23 is partially surrounded by portions of the wire core 12 material. *Id.* at 7:59–61, 9:26–10:7, 15:44–51. The Specification states:

> [C]racks additionally appear on the second alloy layer in a direction perpendicular to a longitudinal direction of the intermediate wire rod, and core wire metal made of soft brass is erupted onto the surface of the second alloy layer through the cracks as if lava, so that a plurality of grain groups are formed on the surface of the second alloy layer.

Id. at 15:30–35. Further, the Specification states:

> Grain having the compositional ratio of three components of the first metal of the core wire, the metallic component of the first alloy layer including the copper-zinc alloy layer, and the metallic component of the second alloy layer including the zinc-copper alloy layer are formed on the surface of the electrode wire . . . .

Id. at 15:44–49.

The ’872 patent concludes with 15 claims. Claims 1, 2, 9, and 10 are illustrative and are reproduced below:

> 1. An electrode wire for electro-discharge machining, the electrode wire comprising:
>
> a core wire including a first metal, the core wire having a smooth surface;
>
> a first alloy layer formed at a boundary region between the core wire and a second metal plated on an outer surface of the core wire due to mutual diffusion between the core wire and the second metal; and
>
> a second alloy layer formed at an outer portion of the first alloy layer due to diffusion of the first metal to the second metal, the second alloy layer having a plurality of cracks therein, the plurality of cracks being formed by twisting the wire with a plurality of rollers,
>
> wherein a core wire material is erupted onto a surface of the electrode wire for electro-discharge machining, which includes at least the core wire, the first alloy layer, and the second alloy layer, along the cracks appearing on the second alloy layer, so that a plurality of grains are formed on the surface of the electrode wire, a length of a grain in the circumferential direction being more than twice a width of the grain, and
>
> wherein the grain including at least the core wire material and a second alloy material is distributed onto the surface of the electrode wire for electro-discharge machining.
>
> 2. The electrode wire of claim 1, wherein the core wire material is erupted together with a first alloy material, so that the

grain including the core wire material, the first alloy material, and the second alloy material is distributed on the surface of the electrode wire for electro-discharge machining.

9. A method of manufacturing an electrode wire for electro-discharge machining, the method comprising:

preparing an intermediate wire rod, which includes a first metal and has a first diameter, as a core wire;

plating the core wire with a second metal;

performing a heat treatment process to make the plated core wire representing tensile strength of about 500 N/mm^2 or less and elongation percentage of 5 or more and to form a first alloy layer in at least a boundary region between the core wire and the second metal due to mutual diffusion between the core wire and the second metal and to form a second alloy layer on an outer portion of the first alloy layer through diffusion of the first metal to the second metal;

forcibly twisting the electrode wire between a plurality of rollers in at least one of up, down, left, and right directions; and

forming a grain including at least a core wire material and a second alloy material on a surface of the electrode wire for electro-discharge machining by erupting the core wire material through a crack appearing on the second alloy layer when performing a fine wire process of making the electrode wire for electro-discharge machining which includes the first alloy layer, the second alloy layer, and the core wire and has a second diameter.

10. The method of claim 9, wherein, in the forming of the grain on the surface of the electrode wire for electro-discharge machining, the core wire material is erupted together with a first alloy material, so that the grain including the core wire material, the first alloy material, and the second alloy material is formed.

Id. at 16:20–49, 17:9–18:6.

C. Petitioner's Asserted Grounds for Unpatentability

Petitioner asserts four (4) grounds for unpatentability, each under 35 U.S.C. § 103(a) for obviousness, as set forth below. Pet. 27–28.

	Claims Challenged	**35 U.S.C. §**	**References**
Ground 1	1–13, 15	§ 103	Tomalin[2] and Nishioka[3]
Ground 2	9–13, 15	§ 103	Tomalin, Nishioka, and the ASM Handbook[4]
Ground 3	1–13, 15	§ 103	Tomalin, Groos,[5] and Grandy[6]
Ground 4	9–13, 15	§ 103	Tomalin, Groos, Grandy, and the ASM Handbook

In support of these grounds for unpatentability, Petitioner submitted, *inter alia*, a Declaration of Dandridge Tomalin (Ex. 1002, "Tomalin Declaration"); Dr. Tomalin is the named inventor in the asserted Tomalin prior art reference (Ex. 1003).[7]

D. Tomalin

Tomalin issued on August 31, 1999, from application serial number 08/922,187, filed September 2, 1997. Ex. 1003, codes [45], [21], [22].

---

[2] U.S. Patent No. 5,945,010 (issued Aug. 31, 1999) (Ex. 1003, "Tomalin").
[3] U.S. Patent No. 3,326,025 (issued June 20, 1967) (Ex. 1014, "Nishioka").
[4] ASM International, ASM Handbook Vol. 2, Properties and Selection: Nonferrous Alloys and Special-Purpose Materials (1990) (Ex. 1022, "ASM Handbook").
[5] U.S. Patent No. 4,766,280 (issued Aug. 23, 1988) (Ex. 1013, "Groos").
[6] U.S. Patent No. 3,677,309 (issued July 18, 1972) (Ex. 1019, "Grandy").
[7] Patent Owner did not depose/cross-examine Dr. Tomalin.

Tomalin, in its Background Section, states that it was known to coat EDM wires with zinc and copper alloy, and that the prior art

> recognizes that a copper-zinc alloy layer formed by means of a dispersion diffusion heat treatment may contain ε phase material (zinc content about 80%); γ phase material (zinc content about 65%); β phase material (zinc content about 45%); and α phase material (zinc about 35%) in accordance with Hansen's phase diagram.[8]

Id. at 3:4–10. In summarizing its disclosed invention, Tomalin states that its

> invention comprises, in one form thereof, an EDM wire with a core which is comprised of a first metal or a metal alloy, such as for instance copper, brass, or copper clad steel, and a coating formed of a metal or metal alloy with a relatively low volumetric heat of sublimation and a relatively high melting point such as, for instance, a copper-zinc γ phase alloy. The coating may cover substantially all or only a portion of the surface of the core.

Id. at 3:52–59.

Tomalin discloses an EDM wire having a core of a first metal, which may begin as copper or α brass. *Id.* at abstract, 3:52–58, 8:1–27. Tomalin discloses that over this core, a zinc coating is applied, which is followed by a heat treatment to provide a diffusion anneal of the wire causing diffusion of zinc from the coating to the core and diffusion of copper from the core to the coating of the wire. *Id.* at Abstract, 3:60–65, 8:1–52, 10:38–42, 12:4–31, Fig. 9. Tomalin discloses that this diffusion annealing produces an α phase brass in the wire's core and ε brass at the wire's outer surface, with γ phase brass there-between. *Id.* at 3:63–4:1, 12:4–31, Fig. 9. The heat treatment parameters, in at least two embodiments disclosed in Tomalin, range in temperature from 166° C to 177° C and have a duration of heating of 3–4

[8] "Hansen's phase diagram" refers to a graph of zinc percentages in various phases of brass (Cu-Zn) alloy relative to temperature. *See* Ex. 1024.

hours, after an initial 1–2 hours to bring the annealing pot (container wherein the anneal is performed) to temperature. *Id.* at 8:25–52, 10:38–42.

Tomalin discloses that either before or after such heat treatments, its EDM wires undergo a drawing process where the wire is drawn to a finish diameter, for example, drawn from 1.33 mm to 0.25 mm. *Id.* at 4:1–9, 6:37–47, 8:58–59, 10:38–40. When the drawing process is performed before the heat treatment the wire maintains a relatively smooth outer surface, which is composed of ε phase brass, as shown in Tomalin's Figures 5 and 6, reproduced below:

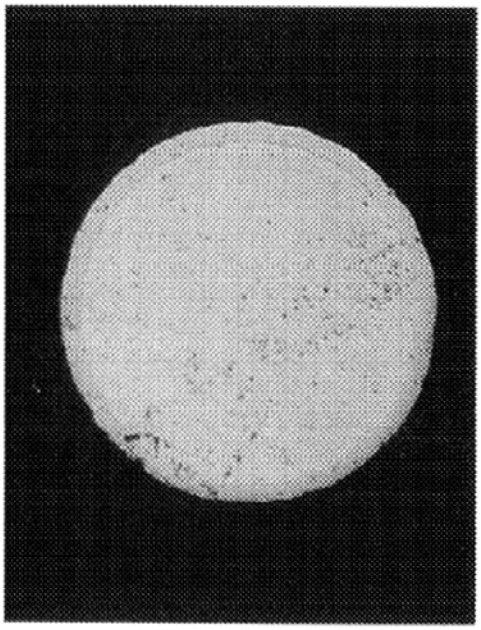

FIG. 5

FIG. 6

Id. at 4:6–9, 10:38–49. Figure 5, above-left, is a photograph of a cross-section (magnified 270 times) through a wire, post-heat-treatment; the wire has a relatively smooth and unbroken surface. *Id.* at 5:54–55, 10:42–49. Figure 6, above-right, is a photograph of the same wire (magnified 500

times) from a surface-view where the wire appears to run vertically down the image and, again, has a relatively smooth and unbroken, if irregular, surface. *Id.* at 5:56–57, 10:42–49. When the drawing process is performed after the heat treatment the wire's outer coating is cracked, broken up, and redistributed across the surface of the wire, thereby exposing the underlying core material, as shown in Tomalin's Figures 2, 3, and 4, reproduced below:

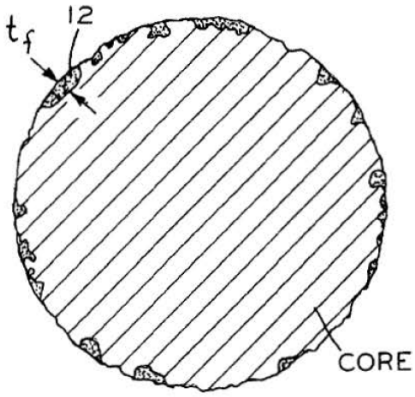

FIG. 2

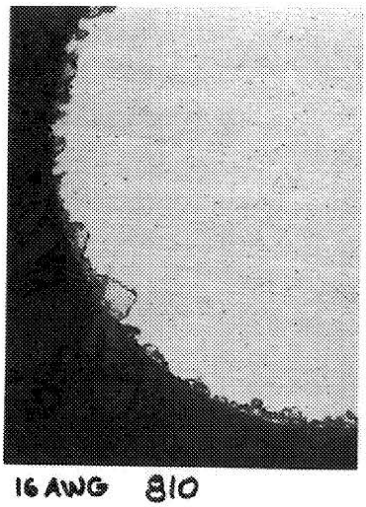

FIG. 3

FIG. 4

Id. at 3:63–4:5, 6:22–7:9, 8:61–67. Figure 2, above-left, shows an illustration of an EDM wire's cross-section with a broken γ phase alloy coating material 12 distributed across the surface and exposing an underlying core material. *Id.* at 5:47–48, 6:43–47. Figure 3, above-middle, is a photograph of a portion of a cross-section of a wire (magnified 520 times) that was drawn after heat treatment; the wire has a cracked and broken coating of γ phase brass on its surface, exposing the underlying wire core, much like Figure 2. *Id.* at 5:49–51, 8:58–67. Figure 4, above-right, is a photograph of the wire of Figure 3 (magnified 500 times), where the wire appears to run vertically across the image, showing the cracked appearance

of the wire's surface. *Id.* at 5:52–53, 8:58–67. Tomalin does not discuss the specifics of its finishing drawing process.

Regarding the heat-treated, zinc-coated wires shown in its Figures 2–6, above, Tomalin explains that

> the zinc content, beginning at the outer surface of the wire and traveling radially inwardly, starts at approximately 85% and then, at a depth of approximately 0.003 mm, drops down to 68%. The zinc content stays substantially at this level until, at a depth of 0.012 mm, the zinc content again drops down to approximately 32%, the level at which it remains. It can thus be seen that two (2) phase layers of alloy are present in the coating. The first phase layer is comprised of residual ε phase alloy with 85% in zinc content. The second layer phase which is present in the coating is a γ phase alloy with a zinc content of 68%. The core itself begins at a depth of about 0.012 mm from the outer surface and includes a phase alloy with nominally 35% zinc. The small amount of ε phase alloy is retained in this sample because of the high level of zinc content in the core. The zinc in the core lowers the driving force for diffusion hence allowing some ε phase material to be retained. Increasing the annealing temperature slightly could eliminate the residual ε phase material, should that be desired, although its high zinc content is certainly not objectionable.
>
> It can also be seen that there is no gradual or minimal reduction in or gradient of zinc content from the outer surface of the EDM wire to the core. Rather, FIG. 9 shows that the zinc content follows a step function with zinc content discontinuities between the various phases of the alloy, thus clearly indicating distinct phase layers.

Id. at 12:5–31; *see also id.* at 5:49–57, 5:63–64, 8:61–67, and Fig. 9 (collectively explaining that Figure 9 illustrates the wire of Tomalin's Example 1, also shown in Figures 3 and 4). Tomalin's Figure 9 is reproduced below:

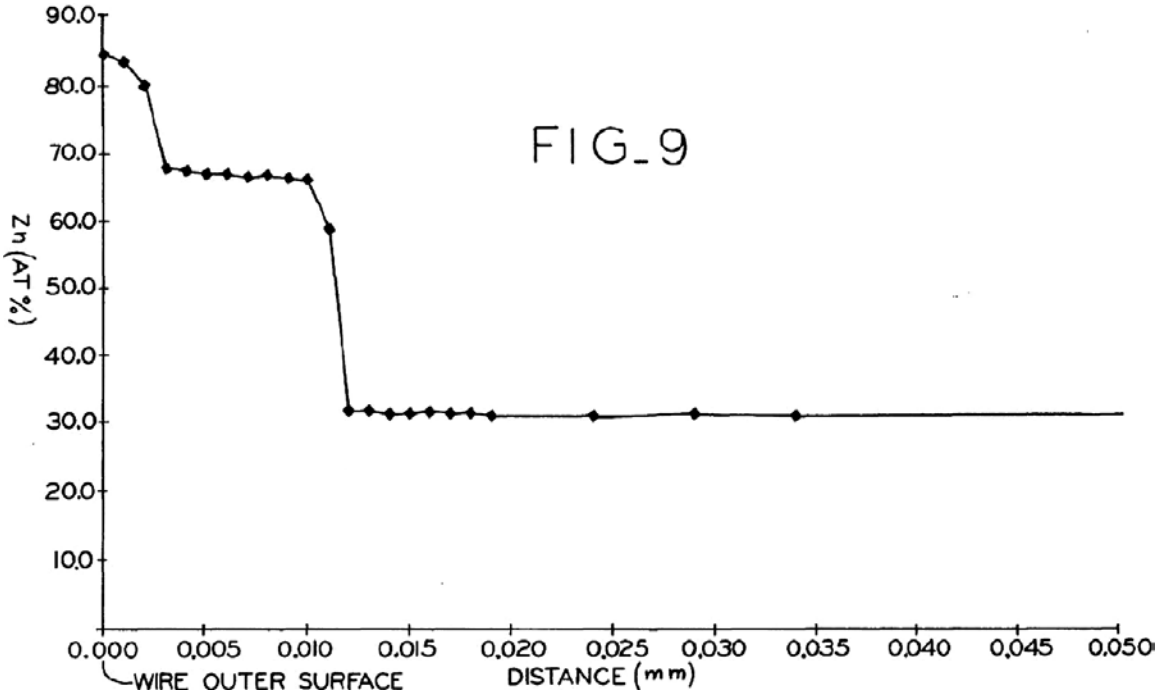

Id. at Fig. 9. As noted by the quoted portion of Tomalin, above, Figure 9 is a graph comparing a wire's zinc content (%) to the depth from the surface of the wire (mm) after heat-treatment. Figure 9 shows that the zinc content follows a step function with zinc content discontinuities between the various phases of the alloy (>80% Zn at and near the surface, about 68% Zn thereunder, and about 30% Zn thereunder, with the balance being Cu), thus indicating distinct brass phase layers. *Id.* at 12:28–31.

E. NISHIOKA

Nishioka issued on June 20, 1967, from application serial number 389,737, filed August 14, 1964. Ex. 1014, cover page, 1:6. As indicated by its title, Nishioka is directed to an apparatus for alternately bending (or stretching) to draw a wire (or plate). *Id.*; *see also id.* at 1:9–11. Nishioka refers to this bending as "zig-zag bending wherein one side alternately is in tension and then in compression," which Nishioka discloses is "a method for

reducing the diameter of wire," which prior to its invention was accomplished by passing such wires "through dies." *Id.* at 1:12–19; *see also id.* at 2:7–35. Nishioka's Figure 1 illustrates a device for bending a wire in a zig-zag fashion, in four different directions, using rollers; Figure 1 is reproduced below:

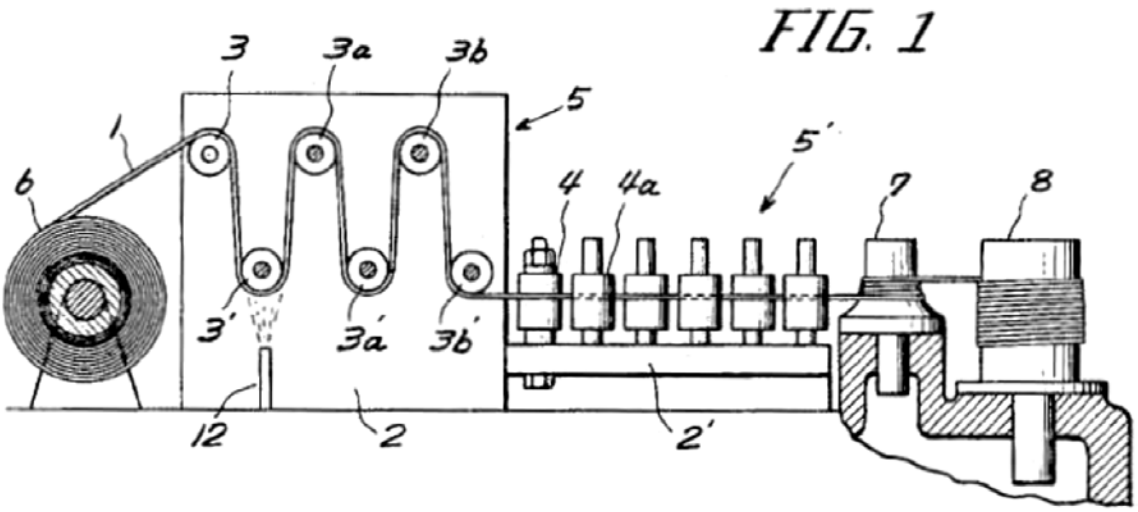

Id. at 2. Nishioka's Figure 1 "is a side elevation view" of bending device 5 of a drawing apparatus, which has "a plurality of parallel rollers 3, 3', 3a, 3a'" provided in "the zigzag relation," and another set of "parallel rollers 4, 4a . . . provided at a right angle to said bending device" and the first set of rollers. *Id.* at 1:56–57, 2:7–15. Wire 1 is shown being passed over these rollers 3, 3', 3a, 3a', 4, 4a, up, down, right, and left. *Id.* at Fig. 1. Nishioka teaches that its wire-bending device and method has advantages over the die-pulling method of the prior art including power economy, equipment economy, operation economy, and improved mechanical characteristics of the drawn material, i.e., reduced internal stress. *Id.* at 1:36–48.

Nishioka teaches that the wire can be annealed during the bending process. *Id.* at 4:25–26. Nishioka further teaches that the outer surface of

the wire may generate scales, which are not as flexible as the wire's interior and so may separate therefrom; these scales can be removed, if desired, by a water nozzle. *Id.* at 4:27–34.

F. ASM HANDBOOK

ASM Handbook is a publication by ASM International, originally published in 1990 as Volume 2 of the 10th Edition Metals Handbook. Ex. 1022, 2–17 (indicated as available in the Library of Congress catalog). ASM Handbook discloses, *inter alia*, various brass products' commercial names, tensile strength (MPa), and elongation percentage. *Id.* at 1030–32. ASM Handbook discloses that such brass products are typically used in a variety of applications, including as wires. *Id.* at 1030. ASM Handbook teaches a 2 mm diameter wire identified as "C26800, C27000," that is an α brass wire with a zinc: copper ratio of 35Zn:65Cu, has a tensile strength of 485 N/mm^2 and an elongation of 20%. *Id.* at 1030–32.

III. DISCUSSION

A. ORDINARY LEVEL OF SKILL IN THE ART

Petitioner submits, as set forth by the Tomalin Declaration:

> At the relevant time for the '872 Patent, I believe that a person of ordinary skill in the art of the '872 Patent would have had a B.S. degree in materials science (or comparable degree) and three to four years of experience, or a M.S. in materials science (or comparable degree) with at least two years of experience the experience being in the area of brass coated EDM wire manufacturing and use. These descriptions are approximate, and a higher level of education or specific skill might make up for less experience, and vice-versa.

Ex 1002 ¶ 16.

Patent Owner's expert, Dana J. Medlin, submits:

> At the relevant time for the '872 Patent, I believe that a person of ordinary skill in the art ("POSITA") of the '872 Patent would have had a B.S. degree in Materials Science Engineering or Metallurgical Engineering (or comparable degree) and three to four years of experience in that field, or a M.S. in Materials Science Engineering (or comparable degree) with at least two years of experience in the area of Materials Science or Metallurgical Engineering. These descriptions are merely examples; a higher level of education or specific skill could make up for less experience, and vice-versa.

Ex. 2004 ¶ 12.

The parties' respective proposed definitions of the skilled artisan are similar except for Patent Owner's expansion of the education of the skilled artisan to further include a potential degree in "Metallurgical Engineering" and Petitioner's specificity regarding the skilled artisan's experience as including "the area of brass coated EDM wire manufacturing and use." Other than their separate proposals, the parties do not argue one of these proposed definitions is correct as opposed to the other. Therefore, we accept and use herein an inclusive combination of the above definitions of the skilled artisan, as follows:

> The person of ordinary skill in the art would have had a B.S. degree in materials science, or metallurgical engineering, or a comparable degree, and 3–4 years of experience; or an M.S. in such fields, with at least 2 years of experience; the experience being in the area of materials science or metallurgical engineering, including in brass coated EDM wire manufacturing and use.

We find that this level of skill in the art is consistent with the prior art of record. *See Okajima v. Bourdeau*, 261 F.3d 1350, 1355 (Fed. Cir. 2001). However, our decision here would not change if we adopted either party's proposed definition.

B. CLAIM CONSTRUCTION

Based on the filing date of the Petition, we give the claim terms in the ’872 patent their broadest reasonable interpretation in light of the Specification of the ’872 patent. 37 C.F.R. § 42.100(b) (2018); *Cuozzo Speed Techs. v. Lee*, 136 S. Ct. 2131, 2142–46 (2016).[9]

Sources for claim interpretation include “the words of the claims themselves, the remainder of the specification, the prosecution history [i.e., the intrinsic evidence], and extrinsic evidence concerning relevant scientific principles, the meaning of technical terms, and the state of the art.” *Phillips v. AWH Corp.*, 415 F.3d 1303, 1314 (Fed. Cir. 2005) (en banc) (quoting *Innova/Pure Water, Inc. v. Safari Water Filtration Sys., Inc.*, 381 F.3d 1111, 1116 (Fed. Cir. 2004)). “[T]he claims themselves [may] provide substantial guidance as to the meaning of particular claim terms.” *Id.* However, the claims “do not stand alone,” but are part of “‘a fully integrated written instrument,’ consisting principally of a specification that concludes with the claims,” and, therefore, the claims are “read in view of the specification.” *Id.* at 1315 (quoting *Markman v. Westview Instruments, Inc.*, 52 F.3d 967, 978–79 (Fed. Cir. 1995)).

We analyze the parties’ positions on claim interpretation in view of these standards of law. Except as set forth below, no claim language is expressly interpreted; all other claim language carries its ordinary and customary meaning as it would have had to the skilled artisan. *Vivid Techs.*,

---

[9] On October 11, 2018, the USPTO revised its rules to harmonize the Board’s claim construction standard with that used in federal district courts. *See* 37 C.F.R. § 42.100 (b) (2019). This rule change, however, applies to petitions filed on or after November 13, 2018, and therefore does not apply to this proceeding. *Id.*

Inc. v. Am. Sci. & Eng'g, Inc., 200 F.3d 795, 803 (Fed. Cir. 1999) ("[O]nly those terms need be construed that are in controversy, and only to the extent necessary to resolve the controversy.").

1. Twisting

The claim term "twisting," which appears in claims 1 and 9, is at issue in this case; as claimed, it is a mechanism by which the also-claimed cracks are formed. Ex. 1001, 16:20–44 ("plurality of cracks being formed by twisting the wire with a plurality of rollers"). The parties do not expressly request that "twisting" be construed; however, as we noted upon institution, the meaning and scope of the term is at issue, as exemplified by the Petitioner's alternative grounds for unpatentability and Patent Owner's arguments in the Preliminary Response. Pet. 66 (twisting, as commonly used, may imply some rotational force); *see also* Paper 9, 11–12 ("Inst. Dec."). Moreover, the ultimate meaning of "twisting," in view of the Specification, is not necessarily intuitive. Therefore, we interpret the claim term "twisting," the interpretation being maintained from the Decision Instituting this IPR.

The '872 patent Specification describes *twisting* as encompassing mere bending, in a zigzag fashion or even in one direction only. *See, e.g.*, Ex. 1001, 5:41–45 ("In addition, before the electrode wire for electro-discharge machining is drawn to have a second diameter in the forming of the grain, the electrode wire for electro-discharge machining is forcibly twisted in at least one of up, down, left, and right directions."); *id.* at 12:38–49 ("[T]he intermediate wire rod is curved in a zigzag pattern. After the intermediate wire rod has been passed through the twist unit 33 of curving the intermediate wire rod in a zigzag pattern . . . ."); *see also id.* at 7:33–35,

9:3–12, 9:38–40, 15:14–19, Figure 2. Independent claim 9 expressly recites "forcibly twisting the electrode wire between a plurality of rollers in at least one of up, down, left, and right directions," suggesting that the term "twisting" recited in the independent claims encompasses bending in only one direction, but could include further bending. *Id.* at 17:23–25.

Thus, as we noted upon institution, "twisting" as used in the claims is interpreted to mean *bending in at least one direction, which includes bending a wire in a zigzag fashion*. Inst. Dec. 12. We do not find any reason to modify that construction based on our consideration of the full record, and thus maintain it for our analysis in this decision.

2. Grain/Grains

In its post-institution briefing, Patent Owner states it "does not believe at this time that there are claim construction issues that need to be addressed herein." PO Resp. 3. Patent Owner makes no express request or argument for any specific claim interpretation in post-institution briefing. *See generally* PO Resp. and PO Sur-Reply.

In its post-institution Reply, Petitioner, likewise, makes no express request that any claim language be specifically interpreted. *See generally* Pet. Reply. Petitioner argues, however, that "under the meaning of 'grain' implied by the '872 Patent, namely a cluster or grouping of the different materials, then both Examples 1 and 3 in the Tomalin '010 Patent satisfy this limitation" and "at most, the claimed 'grain,' can be understood to be a cluster or grouping of different materials." *Id.* at 6. Therefore, Petitioner has taken a position that depends upon its interpretation of the term "grain." Regarding the claim term "grain," in briefing Patent Owner does not directly contest Petitioner's proposed definition, but adds that "claims 2 and 10

require all three of the 'grain' 'material[s]' to be on the wire surface, while Petitioner contends that only the 'grain' is required to be on the wire surface and the 'grain' includes the three 'materials.'" PO Sur-Reply 4. Therefore, Patent Owner has also taken a position that depends on its slightly modified interpretation of the term "grain." Accordingly, we determine that construction of the term "grain" or "grains," as used in claims 1, 2, 4, 5, and 7–10 (and proposed replacement claim 16), is necessary to resolve issues in this case. Ex. 1001, 16:20–18:6; Mot. Amend 4.

Although the '872 patent refers to "grain" and "grains" ubiquitously throughout the Specification, exactly what the claims mean by this term is less than fully apparent. *See generally* Ex. 1001. The Background Section of the '872 patent states: "[a]ccording to the related arts, an electrode wire having an alloy layer including copper-zinc grain fragments is formed through the mutual diffusion reaction with a core wire metal including copper performed due to the melted zinc and applied heat, so that the machining speed can be improved." *Id.* at 3:47–51. The Specification indicates that a grain can be formed through a crack or, alternatively, cracks can form around a grain. *Id.* at 4:10–15 ("along cracks"), 6:25–36 ("along cracks"), 6:52–55 ("along cracks"), 6:65 ("cracks formed around the grains"), 9:3–12 ("through cracks to form grains"), 10:16–17 ("cracks between boundary regions of the grains"), 15:26–35, 15:58–63 ("grains . . . through the cracks"). The Specification further indicates that a grain can include one or more of each of the wire's core material, first alloy material, and second alloy material. *Id*. at 4:48–56 ("grain including at least the core wire material and a second alloy material"), 5:1 ("the grain including the core wire material"), 5:27–31 ("the grain including the core wire material,

the first alloy material, and the second alloy material"), 11:33–40 ("Grains having the compositional ratio of three components"), 13:1–8, 14:18–25, 15:44–51. According to the Specification, a grain of the brass core material can form on the zinc-copper alloy surface, grains of the core material can also surround grains of the second alloy material (which can outnumber other grains), and grains of other compositional configurations can also form on the surface of the second alloy layer. *Id.* at 4:10–15, 6:25–36, 9:59–60, 12:58–59. Dimensionally, grains can be twice as long, or more, across the circumferential width of the wire as they are wide along the wire's length. *Id.* at 4:16–20, 4:30–36, 5:1–5, 6:46–50, 7:3–8, 9:13–18, 12:65–67, 15:36–43. Finally, grains "form[] a predetermined pattern." *Id.* at 9:26–30, 12:63–65, 15:36–41. Notwithstanding the descriptions of "grain" cited above, nowhere does the '872 patent specify exactly how any of the above-described characteristics of a grain is to be achieved, nor does the '872 patent otherwise explain how a grain can be identified.

At his deposition, Patent Owner's expert, Dr. Medlin, was asked directly about the '872 patent's use of the term "grain" and the meaning of the term as used in the claims. *See, e.g.*, Ex. 1029, 76:20 ("What is a grain as used in the '872 Patent?"). Dr. Medlin testified that the '872 patent used the term grain in a non-traditional way as compared to how the term would normally be understood in metallurgical engineering. *Id*. at 113:15–24, 185:7–19. Dr. Medlin testified that, as typically used in the industry, a "grain" refers to "a single crystal of atoms in the same orientation," and conceded that "there is no way . . . that one grain could encompass three phases" as claimed, but further stated that the '872 patent "us[ed] the term 'grain' in a different fashion to mean either multiple phases or even multiple

grains within a grain. So it was used technically as a singular word 'grain' but it encompassed multiple grains in its assumption on how it was used in the patent." *Id.* at 81:4–15, 185:9–19. Dr. Medlin equated the '872 patent's use of the term "grain" as a property of the metal wire to how one might refer to the grain "in wood and wood fiber." *Id.* at 79:11–22.

Specifically, regarding the use of the term "grain" in the '872 patent's claim 2, Dr. Medlin was asked: "So it's your understanding of that limitation [that] as long as there is a single grain of a core material, a first alloy material and a second alloy material, a single grain of each of those on the surface of the wire then claim 2 is satisfied?" *Id.* at 79:23–80:2. To which Dr. Medlin responded: "At a minimum, but in practicality there are going to be millions of each of those on the surface." *Id.* at 80:3–4. However, in the same general portion of his deposition testimony, Dr. Medlin emphasized that, as the term "grain" is customarily used in the field, it would be "impossible" for a single individual grain to be composed of three materials/alloys. *Id.* at 80:5–81:15.

At oral argument, Patent Owner was also directly asked about the meaning of the claim term "grain." Hr'g Tr. 49:14–63:19. Patent Owner's explanation was no more enlightening than the '872 patent's Specification or Dr. Medlin's testimony. *Id.*; *see, e.g.*, *id.* at 50:1–12 (Patent Owner: "Let me hazard a construction. And that is, 'At least two materials in contact with one another, where one dimension is longer that the others, or than the other two dimensions'." To which the panel inquired: "That's your interpretation of the word grain?" To which Patent Owner responded: "That's a stab at it."). At oral argument, Petitioner also confirmed its proposed construction to be "a grouping or clustering of materials." *Id.* at

6:20–7:4 (Petitioner's counsel noting: "I believe it was in our Reply Brief that we mention that we understood grain to be used as a grouping or clustering of materials. And I think that is realistically how it should be understood in the context of these patents.").

The Specification of the '872 patent states:

> [A]s shown in FIG. 7, cracks appear on the second alloy layer in a direction perpendicular to a longitudinal direction of the intermediate wire rod, and core wire metal made of soft brass is erupted onto the surface of the second alloy layer along the cracks as if lava, so that a plurality of grain groups are formed on the surface of the second alloy layer.
>
> . . .
>
> Grain fragments having the compositional ratio of three components of the first metal of the core wire, the metallic component of the first alloy layer including the copper-zinc alloy layer, and the metallic component of the second alloy layer including the zinc-copper alloy layer are formed on the surface of the electrode wire for electro-discharge machining that has been manufactured through the above method as shown in FIGS. 4 and 10.

Ex. 1001, 12:54–59, 13:1–8; *see also id.* at 15:26–16:2 (similarly describing grains on the surface of the wire of Embodiment 4 as shown at Figs. 6, 8, and 10). The '872 patent's figures 4, 6, 8, and 10, purporting to show or illustrate grains (or grain patterns) on the surface of wires, are reproduced below:

FIG 4

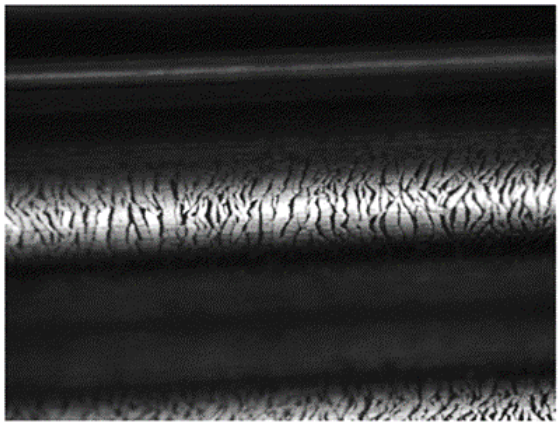

FIG 6

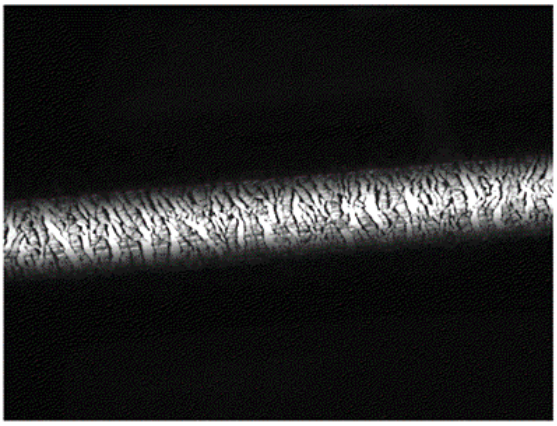

FIG 8

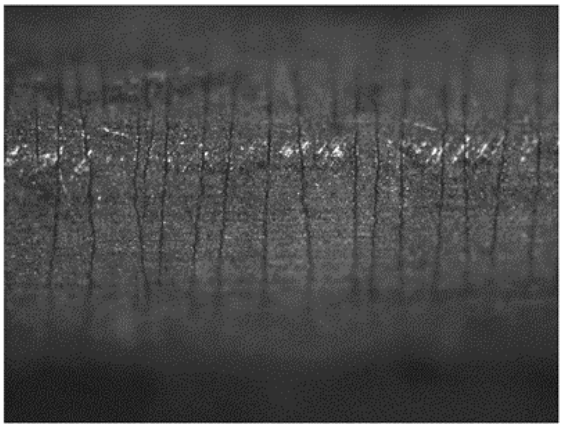

FIG 10

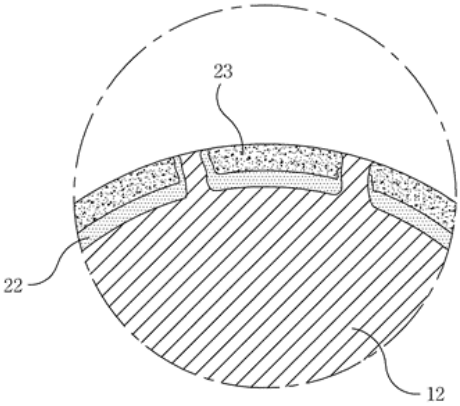

Figures 4 and 6 of the ’872 patent, reproduced above (respectively, top-left and top-right), are photographs of wires, which appear to run horizontally across the photographs and have textured surfaces defined by a cracked appearance. Figure 8 of the ’872 patent, reproduced above (bottom-left), shows a more magnified version of a wire as shown in Figures 4 and 6, and similarly shows a textured surface defined by a cracked appearance. Figure 10 of the ’872 patent, reproduced above (bottom-right), is an illustration of a portion of a cross-section of a wire labeled to show core material 12, first alloy layer 22, and second alloy layer 23. Grains are not specifically identified in any of the above-reproduced figures of the ’872 patent;

however, the ’872 patent indicates that each shows grains. *See, e.g.*, Ex. 1001, 9:13–30, 10:8–17, 13:1–8, 15:26–51. For example, in referring to Figure 10, the Specification states “brass grains are arranged on the surface of the electrode wire in the circumferential direction while forming a predetermined pattern.” *Id.* at 9:26–30. Also, as explained in the ’872 patent, such grains may be identified by their cracked appearance. Ex. 1001, 9:26–30, 12:63–65, 15:36–41; *see also id.* at Figs. 4, 6, 8, and 10 (shown above); and Hr’g Tr. 17:17–20 (’872 patent defines grains by cracks). We find the ’872 patent’s references to “grain” or “grains” to be consistent with Petitioner’s proposed construction.

Because Petitioner’s proposed meaning of “grain” is reasonable in view of the ’872 patent’s Specification, and further because it has not been contested by Patent Owner, and indeed is supported by the testimony of Patent Owner’s expert witness, we conclude the claim term “grain” means *a grouping of materials*, as proposed by Petitioner. *See, e.g.*, Hr’g Tr. 56:10–59:3, 63:12–20 (Patent Owner agreeing with Petitioner’s position that a “grain” is a grouping of materials). We omit the word *cluster* from this definition because it was specifically objected to by Patent Owner, and we perceive no meaningful distinction between “cluster” and “grouping” in our construction. Hr’g Tr. 58:8–25. We determine that this is the broadest reasonable interpretation of this term in view of the Specification.

Importantly, however, we do not interpret this language to mean that each individual component of the “grain,” i.e., each of the grouped core, first alloy, and second alloy materials, must all necessarily be exposed at the surface of the wire to the outside environment. Rather, we interpret the claim language only to require that at least one of these materials, part of the

grain, is exposed at the surface of the wire, while other components may be further beneath the surface as shown in the Specification's Figure 10, where three materials are present and in a group at the surface of the wire, but potentially only one material of the group is exposed. This interpretation is also grammatically consistent with the language of the claims. Because the verb-phrase "is distributed on the surface" is in the singular form, it must necessarily refer to a single "grain," rather than to a plurality of the three different component materials. This interpretation is also consistent with the '872 patent's description of how such grains form via the eruption of material like lava from a volcano. Ex. 1001, 4:10–15 (describing manufacturing process that involves "pushing the manufactured core wire representing the lower tensile strength, that is, the softer brass core wire onto a zinc-copper alloy surface along cracks of the alloy layer due to the pressure generated in an elongation process as if lava, thereby surrounding or covering zinc-copper alloy grain fragments"), 5:27–31, 6:25–30, 6:52–55 ("the softer core wire is erupted onto the surface of the electrode wire along cracks and exposed, so that grains are formed to surround the second alloy layer"), 8:64–9:2 ("The core wire material and the alloy material are erupted upward as if lava along cracks, so that the core wire material and alloy material are distributed on the surface of the electrode wire together with grains of the alloy layer or the alloy material is surrounded by the core wire material."), 9:3–12, 11:12–19, 12:53–59, 13:65–14:5, 15:29–35. As agreed by Patent Owner at oral argument, in such an analogized volcanic eruption, not all erupted material is necessarily exposed to the outside environment at the surface, even if some of the "lava" is present at or above the surface. Hr'g Tr. 36:17–39:14. We determine that the claims encompass a similar

result for the claimed "grain" of the invention after the "core wire material is erupted."

C. Applicable Legal Standards for Patentability

"In an [*inter partes* review], the petitioner has the burden from the onset to show with particularity why the patent it challenges is unpatentable." *Harmonic Inc. v. Avid Tech., Inc.*, 815 F.3d 1356, 1363 (Fed. Cir. 2016) (citing 35 U.S.C. § 312(a)(3) (requiring *inter partes* review petitions to identify "with particularity . . . the evidence that supports the grounds for the challenge to each claim")). This burden of persuasion never shifts to Patent Owner. *See Dynamic Drinkware, LLC v. Nat'l Graphics, Inc.*, 800 F.3d 1375, 1378 (Fed. Cir. 2015) (discussing the burden of proof in *inter partes* review).

Regarding obviousness, the Supreme Court in *KSR International Co. v. Teleflex Inc.*, 550 U.S. 398 (2007), reaffirmed the framework for determining obviousness as set forth in *Graham v. John Deere Co*., 383 U.S. 1 (1966). The *KSR* Court summarized the four factual inquiries set forth in *Graham* (383 U.S. at 17–18) that are applied in determining whether a claim is reasonably likely to be unpatentable as obvious under 35 U.S.C. § 103(a) as: (1) determining the scope and content of the prior art; (2) ascertaining the differences between the prior art and the claims at issue; (3) resolving the level of ordinary skill in the pertinent art; and (4) considering objective evidence indicating obviousness or non-obviousness. *KSR*, 550 U.S. at 406.

"The combination of familiar elements according to known methods is likely to be obvious when it does no more than yield predictable results." *Id.* at 416. "[W]hen the question is whether a patent claiming the combination of elements of prior art is obvious," the answer depends on

"whether the improvement is more than the predictable use of prior art elements according to their established functions." *Id.* at 417.

"The general principle that a newly-discovered property of the prior art cannot support a patent on that same art is not avoided if the patentee explicitly claims that property." *Abbott Labs. v. Baxter Pharm. Prod., Inc.*, 471 F.3d 1363, 1368 (Fed. Cir. 2006); *see also Tyco Healthcare Group LP v. Mutual Pharm. Co., Inc.*, 642 F.3d 1370, 1373 (Fed. Cir. 2011) (the doctrine of inherency applies to obviousness); and *In re Best*, 562 F.2d 1252, 1255 (CCPA 1977) (inherency applies under § 102 and § 103). Our reviewing court has "held that 'the use of inherency in the context of obviousness must be carefully circumscribed because "[t]hat which may be inherent is not necessarily known" and that which is unknown cannot be obvious.'" *Southwire Co. v. Cerro Wire* LLC, 870 F.3d 1306, 1312–11 (Fed. Cir. 2017) (quoting *Honeywell Int'l v. Mexichem Amanco Holding S.A.*, 865 F.3d 1348, 1354 (Fed. Cir. 2017), which quotes *In re Rijckaert*, 9 F.3d 1531, 1534 (Fed. Cir. 1993)). "To establish that a prior art reference inherently—rather than expressly—discloses a claim limitation, 'the limitation at issue *necessarily* must be present, or [be] the natural result of the combination of elements explicitly disclosed by the prior art.'" *Endo Pharm. Solutions, Inc. v. Custopharm Inc.*, 894 F.3d 1374, 1381 (Fed. Cir. 2018) (quoting *Par Pharm., Inc. v. TWI Pharm., Inc.*, 773 F.3d 1186, 1196 (Fed. Cir. 2014)). "[I]nherency 'may not be established by probabilities or possibilities.'" *Id*. (quoting *Par Pharm.*, 773 F.3d at 1195).

With these standards in mind, and in view of the definition of the skilled artisan (*supra* at Section III.A) and claim interpretation (*supra* at Section III.B) discussed above, we address Petitioner's challenges below.

D. Patent Owner's Concessions and Request for Adverse Judgment

As an initial matter, as noted above, Petitioner challenged the patentability of claims 1–13 and 15 over the prior art combinations noted *supra* at Section II.C, including, *inter alia*, the combination of Tomalin and Nishioka. Patent Owner initially presented arguments in support of the patentability of claims 1–13 and 15 over the above-referenced prior art combinations. *See* Prelim. Resp. 12–41. However, after institution, Patent Owner presented arguments only in support of the patentability of claims 2–5 and 10–12 and only argued that the subject matter of these claims was patentably distinguishable over the Tomalin reference (*see* PO Resp. 4 ("Other prior art cited by Petitioners is of little or no importance to the issues raised [by Patent Owner], as they pertain to patent claim language not at issue" in Patent Owner's defense.)) because of the limitations of claim 2. PO Resp. 2, 4–28; PO Sur-Reply 2, 10–23.

At oral argument, the panel noted Patent Owner's limiting of its post-institution arguments to claims 2–5 and 10–12, and inquired of Patent Owner's intentions regarding claims 1, 6–9, 13, and 15. Hr'g Tr. 40:1–16. Patent Owner stated "[t]he other claims we are conceding are unpatentable . . . [o]ther than the claims 2, and their dependent claims, and [claim] 10 and its dependent claims." *Id.* at 40:13–16. Petitioner also expressed that it understood Patent Owner's lack of challenge to the unpatentability arguments to be a concession as to their invalidity based on the Petition's Grounds 1–4. *Id.* at 6:12–17.

Under 37 C.F.R. § 42.73(b), "[a] party may request judgment against itself at any time during a proceeding. Actions construed to be a request for adverse judgment include . . . [c]oncession of unpatentability . . . of the

contested subject matter," as Patent Owner has done here with respect to claims 1, 6–9, 13, and 15. Therefore, consistent with Patent Owner's concession and request for adverse judgement, we conclude independent claim 1, claims 6–8 depending therefrom, independent claim 9, and claims 13 and 15 depending therefrom, to be proven by Petitioner, as discussed further below, to be unpatentable based on the grounds set forth in the petition. *See generally* Pet. Patent Owner's request for adverse judgement is granted. Accordingly, we do not further address the patentability of claims 1, 6–9, 13, and 15 in our analysis of Petitioner's challenges below, although, we address the independent claims to the extent their limitations are included in the remaining dependent claims.

Patent Owner's concession that the limitations of independent claims 1 and 9 is significant. As noted above and discussed further below, Patent Owner maintains its arguments that claims 2–5 and 10–12 are patentable over the prior art combinations asserted under Petitioner's Grounds 1–4. These dependent claims, most directly 2 and 10, depend from independent claims 1 and 9, conceded by Patent Owner to be unpatentable over Petitioner's cited prior art combinations. Therefore, we discuss the cited prior art's teaching of the independent claims' limitations below because it applies to these dependent claims.

We conclude Petitioner has sufficiently established, as Patent Owner has conceded, that the prior art combination of Tomalin and Nishioka teaches and renders obvious the limitations of claim 1, and hence, of dependent claims 2–5, as follows:[10]

---

[10] Although not expressly combined with Tomalin and Nishioka, Petitioner also cites, as evidence, Yoshinari Kaieda & Atsushi Oguchi, *Brittle to*

> "An electrode wire for electro-discharge machining, the electrode wire comprising."

See Pet. 39. This is taught by Tomalin, as explained by Dr. Tomalin.

Ex. 1003, Abstract, 1:20–23, 3:52–59, 8:1–27; Ex. 1002 ¶ 69.

> "[A] core wire including a first metal, the core wire having a smooth surface."

See Pet. 40. This is taught by Tomalin, as explained by Dr. Tomalin.

Ex. 1003, Abstract, 3:52–59, 8:1–27, Figs. 1, 5; Ex. 1002 ¶ 70.

> "[A] first alloy layer formed at a boundary region between the core wire and a second metal plated on an outer surface of the core wire due to mutual diffusion between the core wire and the second metal."

See Pet. 40–41. This is taught by Tomalin, as explained by Dr. Tomalin.

Ex. 1003, 2:57–61, 3:4–10, 3:60–65, 5:63–64, 8:1–52, 10:38–42, 12:4–40,

Fig. 9; Ex. 1002 ¶ 71.

> "[A] second alloy layer formed at an outer portion of the first alloy layer due to diffusion of the first metal to the second metal."

See Pet. 41–43. This is taught by Tomalin, as explained by Dr. Tomalin.

Ex. 1003, 2:57–61, 3:4–11, 3:60–65, 5:63–64, 8:1–52, 10:38–42, 12:4–40,

Fig. 9; Ex. 1002 ¶ 73.

> "[T]he second alloy layer having a plurality of cracks therein."

Ductile Transition of a γ-Brass under High Hydrostatic Pressure and High Temperature, 22(5) TRANSACTIONS OF THE JAPAN INSTITUTE OF METALS 326–36 (1981) (Ex. 1007, "Kaieda"). Pet. 32–33 (citing Ex. 1007, 326–27, 329–30, 335, Photographs 3(a) and 3(b)). Petitioners cite Kaieda as evidence that the skilled artisan would have known that bending/twisting a wire using rollers would form cracks because the outer zinc alloy layer of such a wire would crack under stress. *Id*. Petitioner also cites ASM Handbook (Ex. 1022) as evidence "that a wire with an alpha brass core and tensile strength of 485 N/mm^2, such as the Tomalin wire, will have an elongation of around 20%" with respect to claim 9. Pet. 37.

See Pet. 43–45. This is taught by Tomalin, as explained by Dr. Tomalin. Ex. 1003, 4:1–9, 5:47–53, 6:21–47, 8:58–59, 9:1–43, 10:38–40, Figs. 2–4; Ex. 1002 ¶¶ 74–75.

> "[T]he plurality of cracks being formed by twisting the wire with a plurality of rollers."

See Pet. 45–47. This is taught by Tomalin and Nishioka, as explained by Dr. Tomalin; Tomalin teaches cracks are formed by its finishing drawing process and Nishioka teaches that in such a finishing process it is advantageous to use the claimed zigzag bending processing. Ex. 1003, 8:65–67, Fig. 4; Ex. 1014, 1:9–19, 1:36–48, 1:56–57, 2:7–15, Fig. 1; Ex. 1002 ¶¶ 76–79.

> "[W]herein a core wire material is erupted onto a surface of the electrode wire for electro-discharge machining, which includes at least the core wire, the first alloy layer, and the second alloy layer, along the cracks appearing on the second alloy layer."

See Pet. at 47–49. This is taught by Tomalin, as explained by Dr. Tomalin. Ex. 1003, 5:47–53, 6:37–40, 6:43–47, 9:2–6, 12:11–16, Figs. 2–4, 7, 9; Ex. 1002 ¶ 80.

> "[S]o that a plurality of grains are formed on the surface of the electrode wire, a length of a grain in the circumferential direction being more than twice a width of the grain."

See Pet. 50. This is taught by Tomalin, as explained by Dr. Tomalin. Ex. 1003, Figs. 2–4, 9; Ex. 1002 ¶ 81.

> "[W]herein the grain including at least the core wire material and a second alloy material is distributed onto the surface of the electrode wire for electro-discharge machining."

See Pet. 50–51. This is taught by Tomalin, as explained by Dr. Tomalin. Ex. 1003, 5:47–57, 5:63–64, 6:37–40, 6:42–46, 7:24–29, 8:61–67, 12:28–31, Figs. 2– 4, 9; Ex. 1002 ¶ 82.

Petitioner has also sufficiently proven, and Patent Owner has not contested and has conceded, that the teachings of Tomalin and Nishioka would have been combined by the skilled artisan. *See* Pet. 28–64 (discussing obviousness over Tomalin and Nishioka). Petitioner has sufficiently established that:

> A POSA would have [had] reason to combine Tomalin and Nishioka because Tomalin discloses drawing the wire and Nishioka discloses a technique for wire drawing. Tomalin describes cold drawing a wire to a finish diameter, which creates cracks in the γ brass alloy layer. (Ex. 1003 at 5:1–9; Ex. 1002 at ¶ 76.) Tomalin, however, is silent as to the technique used for drawing the wire. Nishioka discloses a technique for drawing a wire using a plurality of rollers using a twisting technique. (Ex. 1014 at 1:9–19; Ex. 1002 at ¶ 77.) It would have been routine to a POSA to include the drawing technique of Nishioka in the wire manufacturing process disclosed by Tomalin. (Ex. 1002 at ¶ 78.) This sort of drawing by bending technique was well-known in the art. (*See, e.g.*, Ex. 1015, U.S. Patent No. 2,138,201.) Indeed, whether to draw or straighten a wire, the double-bend technique shown in the '872 patent was a well-known technique that existed long-before the '872 patent. (Ex. 1016 at 5:36–51, Fig. 2; Ex. 1017 at Abstract, 2:39–52, 3:40–4:11, Figs. 1–5; Ex. 1018 at 1:76–89, Fig. 1; Ex. 1002 at ¶¶ 33–35.)
>
> A POSA would have [had] additional reasons to combine these references because it was known that bending/twisting via roller-type wire drawing would create cracks in the wire as elevated levels of zinc in the outer coating layers of a zinc alloy would crack when put under stress. (Ex. 1007 at 326–327, 329–330, 335, Photographs 3(a) and 3(b); Ex. 1002 at ¶¶ 36, 79.) As discussed in the '523 patent to Seong and Briffod II, the benefits of cracks in EDM wire were well known. (Ex. 1005 at 6:3–11; Ex. 1012 at 3:40–42, 4:8–15, 4:29–34, Fig. 1b.) Thus, it would have been obvious to modify the Tomalin wire to include a bending (twisting) step to cause the beneficial cracks.

Pet. 31–32 (internal citations, other than record citations, omitted). We conclude Petitioner's argued rationale as to why the skilled artisan would have combined the prior art is reasonable and correct as supported by the evidence cited above. There is also no dispute, and Petitioner has established, that the skilled artisan would have expected to successfully make such a prior art combination, as it would have been merely routine and concerned well-known techniques, as noted in the quote above. We conclude the above are undisputed facts, established as proved by Petitioner in this matter.

Also, similar to the evidence noted above regarding claim 1, Petitioner has sufficiently established, and Patent Owner has conceded, that independent claim 9 is unpatentable under 35 U.S.C. § 103(a) as obvious over Tomalin and Nishioka. Thus, Petitioner has proven that the prior art combination of Tomalin and Nishioka teaches or suggests and, so, renders obvious the following limitations (steps) of independent claim 9 and also of claims 10–12, which depend therefrom, as follows:

> "A method of manufacturing an electrode wire for electro-discharge machining, the method comprising."

Pet. 55–56. This is taught by Tomalin, as explained by Dr. Tomalin. Ex. 1003, Abstract, 1:20–23; Ex. 1002 ¶ 85.

> "[P]reparing an intermediate wire rod, which includes a first metal and has a first diameter, as a core wire."

Pet. 56. This is taught by Tomalin, as explained Dr. Tomalin. Ex. 1003 3:52–59, 5:1–4, 5:49–51, 6:40–44, 7:15–23, 8:1–20, 10:38–41, Figs. 1, 3; Ex. 1002 ¶ 86.

> "[P]lating the core wire with a second metal."

Pet. 56–57. This is taught by Tomalin, as explained by Dr. Tomalin.

Ex. 1003, 2:57–61, 3:61–63, 8:25–28; Ex. 1002 ¶ 87.

> "[P]erforming a heat treatment process to make the plated core wire representing tensile strength of about 500 N/mm^2 or less and elongation percentage of 5 or more."

Pet. 57–59. This is taught by Tomalin, as evidenced by ASM Handbook, as explained by Dr. Tomalin. Ex. 1003, 2:30–33, 3:61–63, 8:3–4, 12:4–16, Fig. 9; Ex. 1002 ¶¶ 88–92; *see also*, cited as evidence, Ex. 1021, 17; 1022, 1030–32.

> "[T]o form a first alloy layer in at least a boundary region between the core wire and the second metal due to mutual diffusion between the core wire and the second metal."

Pet. 59–60. This is taught by Tomalin, as explained by Dr. Tomalin.

Ex. 1003, 3:61–63, 5:63–64, 8:25–28, 12:4–40, Fig. 9; Ex. 1002 ¶ 93.

> "[T]o form a second alloy layer on an outer portion of the first alloy layer through diffusion of the first metal to the second metal."

Pet. 60–61. This is taught by Tomalin, as explained by Dr. Tomalin.

Ex 1003, 2:57–61, 3:61–63, 5:63–64, 8:25–28, 12:4–40, Fig. 9; Ex. 1002 ¶ 93.

> "[F]orcibly twisting the electrode wire between a plurality of rollers in at least one of up, down, left, and right directions."

Pet. 61–62. This is taught by Tomalin, as explained by Dr. Tomalin.

Ex. 1014, 1:14–19, 2:7–15, Fig. 1; Ex. 1002 ¶ 94.

> "[F]orming a grain including at least a core wire material and a second alloy material on a surface of the electrode wire for electro-discharge machining by erupting the core wire material through a crack appearing on the second alloy layer when performing a fine wire process of making the electrode wire for electro-discharge machining which includes the first alloy layer,

> the second alloy layer, and the core wire and has a second diameter."

Pet. 62–64. This is taught by Tomalin, as explained by Dr. Tomalin. Ex. 1003, 5:47–53, 6:37–40, 6:42–46, 7:24–29, 8:25–28, Figs. 2–4, Ex. 1002 ¶ 95.

Similarly to claim 1 discussed above, relevant to claim 9 and its dependent claims, Petitioner sufficiently established that Tomalin and Nishioka would have been combined by the skilled artisan, who would have reasonably expected to successfully do so.

E. Obviousness of Claims 2–5 and 10–12 Over Tomalin and Nishioka

As discussed above, although Petitioner's Ground 1 challenged the patentability of claims 1–13 and 15 under 35 U.S.C. § 103 as obvious over the prior art combination of Tomalin and Nishioka, we granted Patent Owner's request for adverse judgment as to claims 1, 6–9, 13, and 15. Therefore, only claims 2–5 and 10–12 remain to be addressed.

1. Claim 2

Regarding Ground 1, as discussed above, Petitioner has identified how and where the combination of Tomalin and Nishioka teaches or suggests each element of claim 1, from which claim 2 depends. *See supra* Section III.D. We further conclude that Petitioner has also proven how and where this prior art combination teaches or suggests each element of claim 2, as discussed below. *See* Pet. 38–64 (citing Ex. 1002 ¶¶ 98; Ex. 1003 5:47–53, 6:37–40); *see also id.* at 52–53 (claim chart detailing how the Tomalin-Nishioka combination teaches or suggests each element of claim 2).

In addition to the above-discussed elements of claim 2 incorporated from claim 1, claim 2 further requires "the core wire material is erupted

together with a first alloy material, so that the grain including the core wire material, the first alloy material, and the second alloy material is distributed on the surface of the electrode wire for electro-discharge machining." Ex. 1001, 16:45–49. It is this additional subject matter of claim 2 that is at issue here and we analyze the relevant evidence below.

Turning first to the issue of whether the prior art teaches claim 2's recited grain of core material, first alloy material, and second alloy material, Petitioner argues that Tomalin generally, but most specifically in relation to its Example/Specimen 1, teaches an EDM wire having an α brass core, a γ brass alloy over that core, and an outermost ε brass alloy, which after finishing steps, is cracked at its surface so that all three of these materials are present as a grain at the wire's surface. Pet. 33–35 ("Tomalin discloses the core material, gamma brass, and epsilon brass along the cracks in the epsilon and gamma brass layers, as shown [in Tomalin's Figs. 2 and 4]."), 38–39 (citing Ex. 1003, 5:47–53, 6:37–40; Ex. 1002 ¶¶ 82, 98), 50–53 (claim chart citing Ex. 1003, 5:47–49, 6:37–40, 6:42–46, 7:24–29, 9:2–6, 12:11–16, Figs. 2, 4, 7, 9; Ex. 1002 ¶ 98); Pet. Reply 7–15 (citing Ex. 1003, 5:53–54, 5:63–64, 8:8–20, 8:25–26, 8:59–67, 10:37–42, 12:4–17, 12:18–25, Fig. 9; Ex. 1002 ¶¶ 53, 71–75, 80–82, 98; Ex. 1029, 67:16–68:24, 73:21–75:8, 76:2–11, 97:12–98:6, 101:2–13, 104:11–105:7, 105:14–106:17, 156:7–10, 156:22–157:24, 163:2–8, 166:6–183:3, 188:13–190:3; Ex. 1030; Ex. 1031; Ex. 2004 ¶¶ 36–46; PO Resp. 13–15, 17–18; Hr'g Tr. 13:7–21, 15:13–18, 16:19–26, 18:24–19:11, 43:18–44:3, 46:24–48:13). Tomalin's Figure 9, which is discussed further below, is central to Petitioner's argument.

Patent Owner's counter argument is that Tomalin does not teach a wire having three different materials on (or grouped at) its surface, as

required by claim 2, but "discloses at most only two materials 'on the surface of the electrode wire' in two of its embodiments of electrode wires [and] [t]hree of Tomalin's embodiments have only one material on the surface of the electrode wire." PO Resp. 13; *see also id.* at 11. Patent Owner argues that the only disclosure in Tomalin regarding a wire having three materials (i.e., the α brass core, γ brass alloy, and ε brass alloy argued by Petitioner), in any configuration, relates to Tomalin's Example/Specimen 3, which has only a single material, ε brass, on its surface. *Id.* at 16–19, 22–27 (citing Ex. 1003, 10:36–54, 12:4–25, Figs. 5, 6, 9); *see also* PO Sur-Reply 10–23 (citing Ex. 1003, 6:28–8:64).[11] Although Patent Owner agrees with Petitioner's position that Tomalin's Figure 9 characterizes a wire having three materials (i.e., an α brass core, a γ brass alloy, and an ε brass alloy), Patent Owner argues Figure 9 relates only to Tomalin's Example/Specimen 3, which has an uncracked surface of only ε brass, with the other materials thereunder. PO Resp. 17–19, 25–26; PO Sur-Reply 13–14, 16–19.

Under our interpretation of grain above (*supra* Section III.B), contrary to Patent Owner's arguments, the claims do not require the three materials of the claimed grain to be on the wire's surface, merely the grain need be on the surface of the wire.

Tomalin's Figure 9, reproduced below, illustrates the step-wise distribution of three brass materials, measuring from a wire's surface to its core:

[11] We note, Patent Owner does not provide expert support for the arguments in its PO Response.

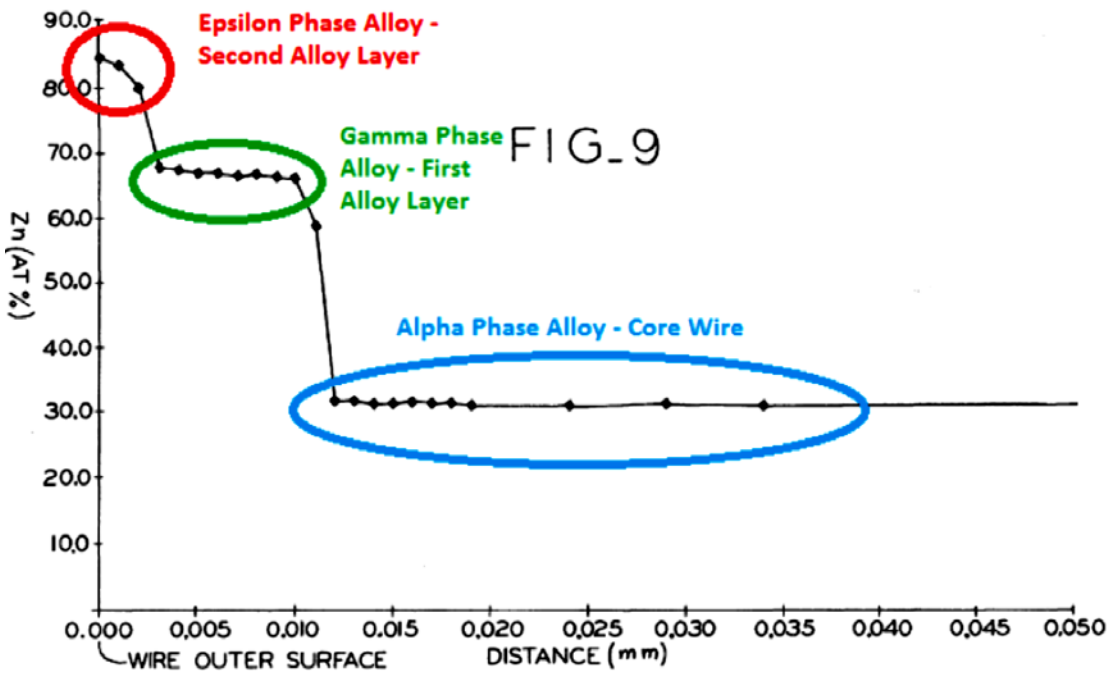

Figure 9 (*see* Ex. 1003) above, as annotated by Petitioner's expert Dr. Tomalin, is a graph comparing a wire's measured zinc content (%) to measured depth from its surface, where the Y-axis is measured brass zinc percentages ranging from 0–90% and the X axis is depth from the wire's outer-most surface (depth of 0.0 mm) to 0.05 mm; three distinct phases of brass of the wire are indicated to be: (1) ε brass alloy of about 80–85% zinc content at the wire's surface to a depth of about 0.003 mm, annotated with red text and encircling; (2) γ brass alloy of about 68% zinc content at a depth of about 0.003–0.012 mm, annotated with green text and encircling; and (3) α brass alloy of about 32% zinc content from a depth of about 0.012 mm and inward, indicated with blue text and encircling. *See* Ex. 1002 ¶ 71. As noted above, it is not disputed that Tomalin expressly discloses at least an embodiment (Example/Species 3) of a wire having these three materials, such as claimed, but this embodiment is not expressly discloses as having

these three materials in a grain at the wire's surface; thus, the question becomes: does Tomalin teach all three of these materials in a grain on the surface of the wire, as required by claim 2.

Based on the evidence before us, discussed below, we conclude that Tomalin does teach a wire having a grain composed of α brass core material, γ brass alloy material, and ε brass alloy material, at the wire's surface. As noted above (*see supra* Section III.B), and contrary to Patent Owner's arguments, claim 2 does not require that each of these three materials of the grain be exposed at the surface.

Tomalin indicates, somewhat circuitously, that the data shown in its Figure 9 (above) applies to its embodiment disclosed at Example/Specimen 1, which is an EDM wire disclosed as having cracks in its surface where an underlying α brass core is exposed at the surface along with γ brass, as shown at Tomalin's Figures 2, 3, and 4, reproduced below:

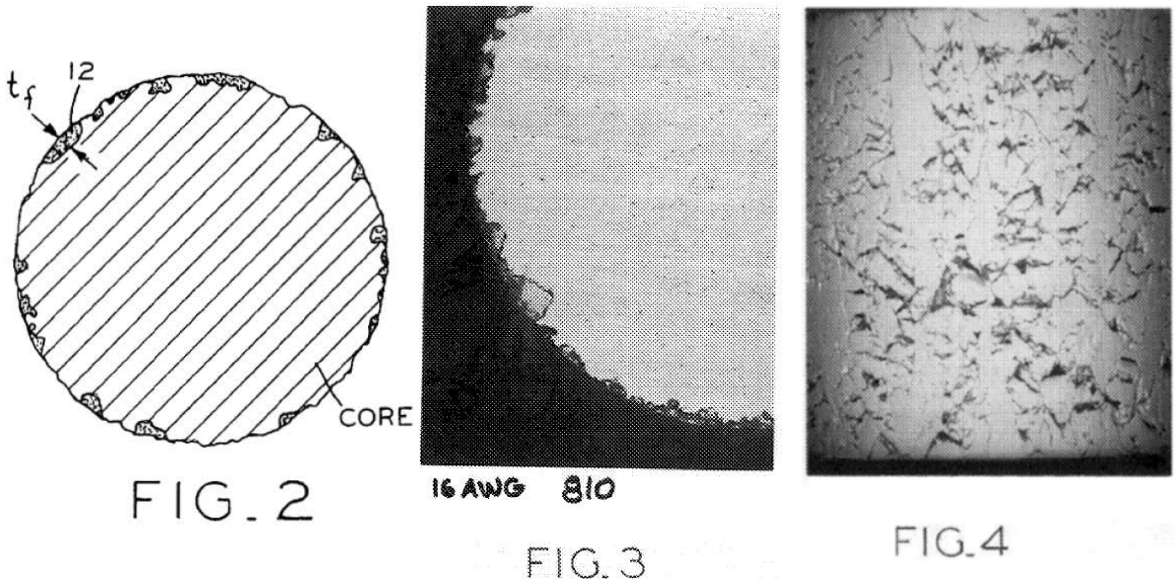

FIG. 2 FIG. 3 FIG. 4

Tomalin's Figure 2 (above-left) is an illustration of an EDM wire's cross-section and shows that γ phase alloy material 12 is broken up and

redistributed (segmented) across the surface of the wire's core material, which occupies the largest part of the wire's surface in the cross-section shown; Tomalin explains that this fracturing and redistribution of the γ phase alloy material 12 coating occurs at the cold drawing process of thinning and finishing the wire. *Id.* at 5:47–48, 6:37–53. Tomalin's Figure 3 (above-center) is a photograph showing a cross-section-portion of an EDM wire, specifically of Tomalin's Example/Specimen 1, magnified 520 times, having a surface with γ brass material that has been broken up and redistributed across an underlying α brass core material after the wire was drawn subsequent to a heat treatment, similar to the wire illustrated at Figure 2. *Id.* at 5:49–51, 8:62–9:6. Tomalin's Figure 4 (above-right) is a photograph showing the Example/Specimen 1 EDM wire of Figure 3, magnified 500 times (the wire appears to run lengthwise, vertically across the image); the surface is shown to be cracked and shows gaps in a broken-up and redistributed γ brass alloy. *Id.* at 8:65–67. Thus, these figures explicitly show groupings of *at least* α brass and γ brass at the wire's surface.

Tomalin discloses that the wire shown in Figures 3 and 4 above began as a 1.30 mm wire core of α brass (65% Cu, 35% Zn), which was coated with 500 micro-inches of zinc, resulting in a 1.33 mm thick wire at a heat treatment step. Ex. 1003, 8:1–27. This wire was disclosed to be heat treated (diffusion annealed) at 177°C (166–177°C) for 4 hours. *Id.* at 8:27–40. Tomalin discloses that the heat treatment diffused copper from the core into the zinc coating and zinc from the coating into the core to create a γ phase brass layer over the α brass core. *Id.* at 8:40–43. Regarding the heat and timing parameters of this anneal, Tomalin discloses that the temperature was selected to provide this diffusion of copper and zinc, but to be lower than the

melting point of zinc, and the anneal duration was chosen to allow conversion of all the zinc coating material to γ phase alloy without converting it to β phase alloy, but, in any event, that conversion to β phase alloy would have required a considerably longer duration than the time chosen. *Id.* at 8:43–52. Tomalin discloses that, after the heat treatment/annealing, the wire was cooled and then cold drawn to a finish diameter of 0.25 mm, thereby breaking up the wire's surface to give it the appearance shown in Figures 3 and 4 above (and also at Figure 5, which is a wire drawn before a heat treatment). *Id.* at 8:53–67; *see also id.* at 10:38–43 (Figure 5 shows a wire of Example/Specimen 3, drawn to a finish size before undergoing a heat treatment as in Example/Specimen 1).

Thus, Tomalin only explicitly describes its Example/Specimen 1 as having γ brass alloy and α brass core material exposed at its cracked surface and its Figures 2–4 show groupings of such γ brass alloy and α brass core material at the wire's surface. Thus, Tomalin teaches grains of at least γ brass alloy and α brass core material at its wire's surface. *Compare* Ex. 1003, Figs. 2–4, *with* Ex. 1001, Figs. 4, 6, 8, 10 (described as showing grains). The question, thus, becomes whether the wire of Tomalin's Example/Specimen 1 also necessarily (inherently) includes a third material, i.e., the claimed second alloy, for example ε brass alloy, grouped at the wire's surface with these α brass and γ brass materials, as argued by Petitioner, or does not, as argued by Patent Owner.

As noted above, Tomalin's Figure 9 describes a post-heat treatment EDM wire having and α brass core, γ brass layer thereover, and ε brass layer at the surface. Specifically, regarding Figure 9, Tomalin states:

> FIGS. 9 and 10 ***show an analysis of the zinc content for specimens 3 and 4*** shown in Tables 1 and 2. In FIG. 9, it can be seen that the ***zinc content, beginning at the outer surface of the wire and traveling radially inwardly***, starts at approximately 85% and then, at a depth of approximately 0.003 mm, drops down to 68%. The zinc content stays substantially at this level until, at a depth of 0.012 mm, the zinc content again drops down to approximately 32%, the level at which it remains. It can thus be seen that ***two (2) phase layers of alloy are present in the coating***. The ***first phase layer is comprised of residual ε phase alloy with 85% in zinc content***. The ***second layer phase which is present in the coating is a γ phase alloy with a zinc content of 68%***. The ***core*** itself begins at a depth of about 0.012 mm from the outer surface and includes ***α phase alloy with nominally 35% zinc***. The ***small amount of ε phase alloy is retained in this sample because of the high level of zinc content in the core***. The zinc in the core lowers the driving force for diffusion hence allowing some ε phase material to be retained. ***Increasing the annealing temperature slightly could eliminate the residual ε phase material, should that be desired, although its high zinc content is certainly not objectionable***.
>
> It can also be seen that there is no gradual or minimal reduction in or gradient of zinc content from the outer surface of the EDM wire to the core. Rather, FIG. 9 shows that the zinc content follows a step function with zinc content discontinuities between the various phases of the alloy, thus clearly indicating distinct phase layers. This is shown even more dramatically in FIG. 10 wherein the zinc content of the coating at the surface is substantially constant at 65% and then drops off at the core to 0%. Since the core of Specimen 4 is copper clad steel and contains no zinc, the driving force for diffusion is higher and no ε phase alloy material is retained. Thus, the entire coating of Specimen 4 consists of γ phase material. Clearly, in neither of Specimens 3 and 4 is any β phase alloy (45% zinc) present in the coating.

Ex. 1003, 12:4–40 (emphasis added). Although it may appear from the above quoted passage of Tomalin that Figure 9 may be relevant only to

Tomalin's Specimen 3, which is directed to a wire having only ε brass on its surface (a wire that was drawn *prior* to annealing and, so, has a smooth-coated, non-cracked surface), Tomalin further explains that "FIG. 9 is a graph illustrating the zinc content as a percent by weight in the coating of the wire *of FIG. 4*; and" "FIG. 4 is a 500 X magnified photograph of the surface of the wire *of FIG. 3;*" and "FIG. 3 is a 520 X magnified photograph of a cross section of a 0.25 mm diameter EDM wire which was drawn after heat treatment at a diameter of 1.33 mm;" and "[t]he appearance of the resulting wire [of Example/Specimen 1] can be seen in FIGS. 3–5." Ex. 1003, 5:49–64, 8:61–62 (emphasis added).

Thus, Figure 9 also discloses the material content and material configuration of the wire of Tomalin's Example/Specimen 1, at least *after* its heat treatment, diffusion anneal and *prior* to the wire's cold drawing to a finish diameter of 0.25 mm. This makes sense because Tomalin explains that Examples/Specimens 1 and 3 used similar heat treatments, which is the process whereby zinc is diffused from the coating on the wire's surface to its interior and copper diffuses from the wire's interior to its surface. *Id.* at 10:41–42. Likewise, it makes sense that Tomalin's Example/Specimen 3 would have only a single material at its surface because it did not undergo a drawing step *after* annealing to provide the surface cracks that redistribute the coating and expose underlying material as in other wire embodiments of Tomalin. *See supra* discussion of Tomalin's Figs. 2–4.

In his deposition, Patent Owner's expert, Dr. Medlin, confirmed that Figure 9 of Tomalin relates to Tomalin's Specimen/Example 1. Ex. 1029, 155:5–156:10 ("Q: So based on that disclosure, shouldn't a person of ordinary skill in the art understand that Figure 9 relates to Specimen 1?

A: Yes, that's correct."). Patent Owner's expert, Dr. Tomalin, also reads the Tomalin patent (his own patent) to disclose that its Figure 9 relates to its Example/Specimen 1. Ex. 1002 ¶¶ 71–82, 98 (discussing Ex. 1003, 2:57–61, 3:61–63, 5:47–53, 5:63–64, 6:21–7:8, 8:25–28, 9:1–43, 12:4–40, Figs. 2–4, 9.). Pointing to Tomalin's Figure 4, Dr. Tomalin states that it shows "cracks extend to the surface of the wire, which confirm that the epsilon brass layer (shown, for example, in Figure 9) contain cracks in addition to the underlying gamma brass layer." *Id.* ¶ 75.

In view of the above, we conclude that Tomalin's Figure 9, which indicates the presence of α brass material, γ brass material, and ε brass material in an EDM wire, relates to and describes the wire of Tomalin's Example/Specimen 1 as being composed of such materials, at least prior to a drawing step, which cracks its surface and redistributes the outer material. Thus, the next question becomes whether, upon drawing (or twisting as claimed and as taught by Nishioka) to expose its γ and α brass materials, which are expressly identified as present in Tomalin's Example/Specimen 1, the Tomalin wire of Example/Specimen 1 would necessarily (inherently) retain ε brass at its surface, grouped with the γ brass and α brass materials.

In view of the fact that Tomalin is not explicit in stating that its Example/Specimen 1, as finished, includes ε brass alloy material (15% Cu, 85% Zn), γ brass alloy material (32%Cu, 68% Zn), and α brass core material (65% Cu, 35% Zn), Dr. Medlin, Patent Owner's expert, was directly questioned about whether it would be the case that all three of these materials would inherently be present, and at the surface, of such a wire; he confirmed it. We review Dr. Medlin's testimony on this subject below.

Dr. Medlin confirmed that, if the Tomalin Example/Specimen 1 wire had these three alloy phases (α, γ, and ε brass) after annealing, as indicated by Tomalin's disclosure relating to its Figure 9, the three alloy phases would necessarily be on the outside of the wire after it was drawn (and cracked), because "that's exactly what's described [in the '872 patent], but [Dr. Medlin qualified,] it's not in this [Tomalin] patent [explicitly]. So your assumptions are true and that's clearly called out in the '872 patent, it will happen." Ex. 1029, 75:13–24. The deposition examination of Dr. Medlin further proceeded as follows: Q: "If you took a wire with the three alloys and drew it using the technique described with reference to [Tomalin's] Specimen 1, would you have three alloys on the surface of the wire?" and A: "Well, again, I know for a fact that that would happen because that is described in the '872 patent." *Id.* at 76:2–11. Dr. Medlin further testified that "[i]f [Tomalin's] Figure 9 - - assuming Figure 9 is a chemistry profile of Sample No. [Example/Specimen] 1, there would be epsilon [brass alloy] at the surface" of the wire. Ex. 1029, 149:1–3; *see also id.* at 150:21–151:4.

Further, as noted above, it is without dispute that Tomalin's Figure 9 is descriptive of the materials found in Tomalin's Example/Specimen 3, i.e., an un-cracked wire, and shows it to have these three brass materials (α, γ, and ε) present. *See* Ex. 1029, 69:12–70:12, 130:22–25. Thus, the evidence establishes that a wire having the starting composition of Tomalin's Example/Specimen 3 (effected by initially coating a wire and then drawing it), and annealed using the heat treatment parameters of Examples/Specimens 1 and 3, results in a wire with ε brass alloy on its surface and γ and α brass there-below. And, Dr. Medlin confirmed that

these three materials would be at the surface of Tomalin's Example/Specimen 1.

In order to make a comparison between Tomalin's Examples/Specimens 1 and 3, at deposition, Dr. Medlin confirmed that there are four (4) variables to consider when determining what brass alloy or alloys is/are formed in a wire having an α brass core coated with zinc upon heat treatment, as taught by Tomalin, those variables being: (1) how much zinc is in the core; (2) the amount (thickness) of zinc in the coating when annealing; (3) the temperature of the heat treatment; and (4) the time of the heat treatment. Ex. 1029, 96:23–98:6.

Regarding its Example/Specimen 3 (which has an ε brass surface), Tomalin states that its "[h]eat treatment was similar to Example 1"; thus, Dr. Medlin's identified variable 3 (anneal temperature) and variable 4 (anneal duration) for Tomalin's Examples/Specimens 1 and 3 are the same. Ex. 1003, 10:41–42; *see also* Ex. 1029 163:9–17 (Dr. Medlin confirming as much). Regarding the wire core composition of its Examples/Specimens 1 and 3, Tomalin also confirms that they were the same: "CDA alloy 270 brass; α phase brass 65% Cu 35% Zn." Ex. 1003 8:8–20 (Table 1); *see also* Ex. 1029 162:19–163:8, (Dr. Medlin confirming the cores of these two species of Tomalin were the same).

Therefore, the determinative variable becomes (2) the amount of zinc in the coating upon annealing when analyzing whether or not the wire of Tomalin's Example/Species 1 would have necessarily had ε brass alloy material on its surface. *See* Ex. 1029, 132:5–10 (Dr. Medlin testified, Q: "hypothetically if there were epsilon brass in [Tomalin's] Specimen 1 in addition to the gamma and the alpha brass, would you think that the '872

patent is invalid?" A: "Yes, [but] that's not described in the Tomalin patent."); *see also id* at 141:7–10 ("I'm only assuming there is no epsilon [brass] based on the fact that they [Tomalin] did laboratory testing on this [Example/Specimen 1] and don't describe any epsilon on the surface."). Dr. Medlin testified that "[i]f you initially start off with a thicker layer of zinc on the surface [of the wire], you potentially then could end up - - or you eventually end up with some epsilon brass on the surface after you've completely heated it." Ex. 1029 139:25–140:4.

Dr. Medlin's deposition testimony walks through the manufacturing process of Tomalin's Examples/Specimens 1 and 3 and performs or confirms calculations proving Tomalin's Example/Specimen 1 to have had more than twice the zinc coating compared to Tomalin's Example/Specimen 3 at the heat treatment step. Ex. 1029 165:5–180:3, Exhibit 9; *see also* Pet. Reply 10–13. The calculations performed or confirmed by Dr. Medlin prove that Tomalin's Example/Specimen 1 had 12.7 microns of zinc coating over its core wire when it was heat treated (before drawing) as compared to Tomalin's Example/Specimen 3, which had 5.5 microns of zinc coating over its core wire when it was heat treated (after drawing). Ex. 1029, 179:14–21; *see also* Pet. Reply 10–13. Based on this, Dr. Medlin agreed that Tomalin's Example/Specimen 1 would have had ε brass on its surface (over the γ brass and α brass core) after heat treatment and before and at a drawing step. Ex. 1029, 179:22–180:3 (Dr. Medlin inserted the equivocation "probable." However, we are unmoved by this in view of his relevant concessions discussed above). Dr. Medlin further agreed that, after the wire of Tomalin's Example/Specimen 1 was drawn, there would still be three different materials on the surface of the wire: ε brass alloy, γ brass alloy,

and α brass core material. Ex. 1029, 182:16–183:3 ("[I]f the epsilon phase is there after Specimen 1 is drawn, would there be three different materials on the surface of Specimen 1? . . . Based on all the assumptions that we had going into this, yes, there is a possibility. . . ."); 189:23–190:3 ("It's more likely that there is going to be epsilon in Specimen 1 than Specimen 3; correct? . . . Based on those assumptions and the calculations we went through, I agree with that statement, it's more likely [that] there is[,] but for some reason it's not explained.").

Based on the facts discussed above, in addition to the facts conceded by Patent Owner proving that the elements and steps of claim 2 incorporated from claim 1 are taught by Tomalin, and where lacking in Tomalin are taught by Nishioka (i.e., twisting) (as discussed *supra* at Section III.D), we conclude that Petitioner has established that Tomalin necessarily teaches an electrode wire for electro-discharge machining in Example/Specimen 1 that has a core composed of α brass, has a γ brass alloy over this α brass core, and has an ε brass alloy over the γ brass alloy (Ex. 1003, Figure 9) and, further, that the ε brass alloy and γ brass alloy covering the core has cracks therein (*id.* at Figure 4). Tomalin discloses drawing such an electrode wire to a diameter of 0.25 mm, which creates these cracks in the surface coating. *Id.* at 8:58–67, 12:44–48. The resulting wire has an appearance as shown in Tomalin's Figures 3 and 4. These cracks expose the underlying α brass core and γ brass alloy and define a grain pattern on the surface of Tomalin's wire (*see* Tomalin's Figs 3 and 4). Thus, the Tomalin-Nishioka combination teaches an electrode wire having a core material (α brass), a first alloy material (γ brass), and a second alloy material (ε brass) grouped together as a grain at the wire's surface.

We next address the claimed "erupted together" element of claim 2. Petitioner contends that Tomalin discloses the core wire material erupts to the surface of the electrode wire when the surface is cracked by the drawing process (or Nishioka's twisting) and, "[t]hus, Tomalin discloses the core material, gamma brass, and epsilon brass along the cracks in the epsilon and gamma brass layers. Pet. 33 (citing Ex. 1003, 5:47–53, 6:21–7:8, 9:1–43, Figs. 2–4; Ex. 1002 ¶ 80). Petitioner further contends, "Tomalin discloses that the core wire and the first alloy layer are erupted to the surface so that the grains include the core wire, first alloy and second alloy, and that the grains are distributed on the surface of the wire." *Id.* at 38–39 (citing Ex. 1003 5:47–53, 6:37–40; Ex. 1002 ¶ 98); *see also id.* at 52–53 (claim chart identifying how the subject matter of claim 2 is disclosed in the prior art).

Patent Owner responds that "Tomalin does <u>not</u> disclose an 'erupt[ion]' of any material 'to the surface' of the electrode wire." PO Resp. 12–13. This one sentence is the only mention of claim 2's eruption element by Patent Owner, which dedicates the remainder of its briefing to the contention that Tomalin does not disclose three materials in a grain on a wire's surface, which is addressed above. *See generally id.*; *see also generally* PO Sur-Reply.

Contrary to this argument, Patent Owner's expert witness, Dr. Medlin, confirmed that if the Tomalin Example/Specimen 1 wire had three alloy phases after annealing (i.e., an α brass core, a γ brass layer there-over, and an ε brass surface layer), which it does, then the three alloy phases would be on the outside of the wire after it was drawn and cracked, because "that's exactly what's described [in the '872 patent]," even though "it's not in this

[Tomalin] patent [explicitly]. So your assumptions are true and that's clearly called out in the '872 patent, it will happen." Ex. 1029, 75:13–24. Dr. Medlin's examination further proceeded: Q: "If you took a wire with the three alloys and drew it using the technique described with reference to [Tomalin's] Specimen 1, would you have three alloys on the surface of the wire?" A: "Well, again, I know for a fact that that would happen because that is described in the '872 patent." *Id.* at 76:2–11. Thus, consistent with the evidence of these three materials being present on the Tomalin wire's surface, as discussed above, it is apparent that, if the wire is initially covered with ε brass and γ brass thereunder, each over and covering an α brass core, and this coating material is cracked and redistributed across the wire's surface so that the underlying γ brass and α brass bursts forth respective of the ε brass material to become the new surface in the gaps formed in the ε brass (with the α brass present and exposed in the gaps in the γ brass as shown in Tomalin's Fig. 2), the γ brass and α brass erupt together, as argued by Petitioner.

Tomalin teaches cold drawing of a wire after heat treatment/annealing, but not twisting with rollers, as claimed. As conceded by Patent Owner, as noted above, and as confirmed by Patent Owner's expert, Dr. Medlin, Nishioka teaches twisting a wire as claimed. Ex. 1029, 122:2–123:1 (Nishioka teaches twisting a wire up, down, left, and right between a plurality of rollers); *see also* Ex. 1014, Title, 1:9–19, 2:7–35, Figure 1. Such twisting would crack an EDM wire similarly to the cracking disclosed in Tomalin by drawing. *See supra* Section III.D. In any event, Dr. Medlin confirmed that, even without the more extreme Nishioka-style twisting, the straight wire-drawing processes taught by Tomalin would also

necessarily result in eruption of the α and γ brass as such is disclosed in the ’872 patent because sufficient strain is provided to cause the outer layers of the wire to start cracking, which Tomalin’s figures illustrate. Ex. 1029, 57:21–58:1 (In Tomalin, the brittle surface cracks and the underlying material plastically deforms and flows to the surface.), 126:25–127:12 (There is eruption of underlying material to the surface in Tomalin’s Example/Specimen 1.); Ex. 1003, 8:58–67, Figs. 2–4, 7.

It is apparent from Tomalin’s Figures 2–4, 7, and 9, and the related disclosure in the reference’s written description that Dr. Medlin’s synopsis is accurate; upon the post-anneal finishing manipulation (drawing as in Tomalin or twisting of Nishioka) of the Tomalin EDM wire, the ε brass outer surface and underlying γ brass coating of the wire cracks, is broken up, and is redistributed across the outside of the wire, and the underlying material, i.e., α brass and γ brass, is exposed at the surface and becomes the surface in the gaps in the ε brass material. Ex. 1003, 6:10–8:67, Figs. 2–4, 7, 9. Thus, we conclude Petitioner’s evidence proves the prior art combination of Tomalin and Nishioka teaches a wire’s α brass core material and γ brass alloy material are erupted together through an ε brass surface when it is cracked, which teaches the “erupted together” limitation of claim 2.

For the reasons set forth above, we conclude claim 2 to be unpatentable as obvious under 35 U.S.C. § 103(a) over Tomalin and Nishioka.

2. Claims 3–5

As discussed above, Patent Owner has conceded that the prior art combination of Tomalin and Nishioka renders obvious the subject matter of

base claim 1 from which still-contested claims 2–5 depend. *See supra* Section III.D; *see also* PO Resp. 2; Hr'g Tr. 40:1–16 ("The other claims we are conceding are unpatentable . . . [o]ther than the claims 2, and their dependent claims, and 10 and its dependent claims."); Ex 1029, 128:24–129:8 (Dr. Medlin confirming that he has not offered nor has an opinion as to the patentability of claims 1, 6–9, and 13–15). Of these still-contested claims, Patent Owner specifically argues only claim 2 (and 10), and neither refutes nor responds to Petitioner's contentions and showing that the subject matter specifically recited by claims 3–5 (and 11, 12) is taught by the Tomalin-Nishioka combination of Ground 1. PO Resp. 5–28.

Because Patent Owner does not contest the prior art's disclosure as applied to the limitations of claims 3–5, we consider the facts of such prior art disclosure proven by Petitioner as discussed below. *See In re Nuvasive, Inc.*, 841 F.3d 966, 974 (Fed. Cir. 2016) ("Although the Board did not make findings as to whether any of the other claim limitations (such as fusion apertures or anti-migration teeth) are disclosed in the prior art, it did not have to: Nuvasive did not present arguments about those limitations to the Board. . . . The Board, having found the only disputed limitations together in one reference, was not required to address undisputed matters."); *see also* Paper 13, 5 ("Patent Owner is cautioned that any arguments for patentability not raised in a response may be deemed waived."). We address Petitioner's evidence regarding the obviousness of claims 3–5 over Tomalin and Nishioka below.

Regarding claim 3, which depends from claim 2, it further requires, "the first metal includes one selected from the group consisting of copper, brass, and a copper alloy, and the second metal includes one selected from

the group consisting of zinc, aluminum, tin, and an alloy thereof." Ex. 1001, 16:50–54. Petitioner argues "Tomalin discloses a core wire material of copper or brass and plating zinc on the core material which meets the additional element of claim[] 3." Pet. 39 (citing Ex. 1002 ¶ 98; Ex. 1003, 3:53–54, 3:61–62); *see also* Pet 53–54 (claim chart identifying how Tomalin teaches such subject matter, citing Ex. 1003, 3:53–54, 3:61–65; Ex. 1002 ¶ 99).

The evidence supports Petitioner's argument regarding claim 3. Tomalin teaches that a first metal, that is, the metal composing an EDM wire's core, can be copper, brass, or a copper alloy; and that a second metal, that is, an alloy formed by diffusion between a copper containing core and a zinc coating, can be a zinc alloy. *See, e.g.*, Ex. 1003, 5:49–57, 5:63–64, 8:61–67, 12:5–31, Fig. 9. Therefore, Tomalin teaches the limitation of claim 3.

Regarding claim 4, which depends from claim 2, it further requires, "the grain including at least the second alloy material is surrounded by the core wire material." Ex. 1001, 16:55–57. Petitioner argues, "Tomalin discloses a second alloy material on the surface of the wire is surrounded by core material which meets the additional elements of claim[] 4." Pet. 39 (citing Ex. 1002 ¶ 1006; Ex. 1003 6:43–7:23, Fig. 2).

The evidence supports Petitioner's argument regarding claim 4. Tomalin teaches a wire with a surface with groupings of γ brass (i.e., the second alloy material) surrounded by core α brass material. *See, e.g.*, Ex. 1003, Figs. 2–4 and 3:63–4:5, 6:22–7:9, 8:61–67. Therefore, Tomalin teaches the limitation of claim 4.

Regarding claim 5, which depends from claim 2, it further requires, "the grain including the core wire material is arranged in a direction substantially perpendicular to a longitudinal direction of the electrode wire for electro-discharge machining, and has a length twice or ten times greater than a width of the grain." Ex. 1001, 16:58–62. Petitioner argues, "[t]he grains in Tomalin have a direction perpendicular to the longitudinal direction of the electrode wire as shown in Tomalin Figure 4" and "Figure 4 also shows the grains have a length of about twice as great as their width, which renders the additional elements of claim[] 5." Pet. 39 (citing Ex. 1002 ¶ 101; Ex. 1003, Fig. 4).

The evidence supports Petitioner's argument regarding claim 5. Tomalin teaches grains patterned in a direction across the width of the wire, as opposed to along the wire's length; some of these patterned grains are at least twice as wide in the direction across the wire's width as they are wide along the wire's length direction, as claimed. Ex. 1001, Fig. 4. Therefore, Tomalin teaches the limitation of claim 5.

For the reasons set forth above, we also conclude Petitioner has proven claims 3–5 to be unpatentable as obvious under 35 U.S.C. § 103(a) over Tomalin and Nishioka.

3. Claim 10

Regarding Ground 1, as discussed above, Petitioner has identified how and where the combination of Tomalin and Nishioka teaches or suggests each element of claim 9 (similar to claim 1), from which claim 10 depends. *See* Pet. 28–38 (citing Ex. 1002 ¶¶ 33–35, 48, 69–81, 88–92, 94, 95, 104; Ex. 1003, Abstract, 1:20–23, 2:30–33, 3:52–59, 3:61–64, 4:1–5, 5:1–9, 5:47–53, 5:63–64, 6:21–7:8, 7:15–29, 8:1–20, 9:1–43, 10:37–11:11,

12:4–40, Figs. 1–4, 9; Ex. 1014, 1:9–19, 1:56–59, 2:7–55, 3:36–54, 5:28–37, Figs. 1, 2, 9). Furthermore, we conclude that Petitioner has also proven how and where this prior art combination teaches or suggests each element of claim 10, as discussed below. As concluded above, Petitioner has proved there would have been motivation for the skilled artisan to combine Tomalin and Nishioka as set forth above and also that the skilled artisan would have had a reasonable expectation of success in doing so. *See supra* Section III.D. As noted above, these are undisputed facts, having been proved by Petitioner in this matter. These conclusions apply to claim 10, as they did to claim 2, as discussed above.

In addition to the above-discussed elements or steps of claim 10 incorporated from independent claim 9, claim 10 further requires that "in the forming of the grain on the surface of the electrode wire for electro-discharge machining, the core wire material is erupted together with a first alloy material, so that the grain including the core wire material, the first alloy material, and the second alloy material is formed." Ex. 1003, 18:1–6. This subject matter of claim 10 is substantially similar to the elements of claim 2, discussed above. Claim 10 differs from claim 2 in not requiring that the grain be "distributed on the surface of the electrode wire," as recited by claim 2. The limitations specific to claim 10 are taught by the Tomalin-Nishioka prior art combination for the same reasons the similar limitations were taught by this prior art combination, as discussed above. *See supra* Section III.E.1.

Therefore, for the same reasons as set forth above regarding the unpatentability of claim 2, we conclude that claim 10 is unpatentable under 35 U.S.C. § 103(a) as obvious over Tomalin and Nishioka.

4. Claims 11 and 12

As discussed above, Patent Owner has conceded that the prior art combination of Tomalin and Nishioka renders obvious the subject matter of base claim 9 from which still-contested claims 10–12 depend. *See supra* Section III.D; *see also* PO Resp. 2; Hr'g Tr. 40:1–16 ("The other claims we are conceding are unpatentable . . . [o]ther than the claims 2, and their dependent claims, and 10 and its dependent claims."); Ex 1029, 128:24–129:8 (Dr. Medlin confirming that he has not offered nor has an opinion as to the patentability of claims 1, 6–9, and 13–15). Of these still-contested claims, Patent Owner specifically argues only claims 2 and 10, and neither refutes nor responds to Petitioner's contentions and showing that the subject matter specifically recited by claims 11 and 12 is taught by the Tomalin-Nishioka combination of Ground 1 (or the prior art combinations of Grounds 2–4). PO Resp. 5–28. Because Patent Owner does not contest the prior art's disclosure as applied to the limitations of claims 11 and 12, we consider the facts of such prior art disclosure proven by Petitioner as discussed below. *See In re Nuvasive, Inc.*, 841 F.3d at 974; *see also* Paper 13, 5 ("Patent Owner is cautioned that any arguments for patentability not raised in a response may be deemed waived."). We address Petitioner's evidence regarding the obviousness of claims 11 and 12 over Tomalin and Nishioka below.

Regarding claim 11, which depends from claim 10, it further requires, "the core wire is plated with the second metal through one of an electroplating scheme, a dip-plating scheme, and a chemical plating scheme." Ex. 1003, 18:7–11. Petitioner argues "Tomalin discloses

electroplating the zinc layer, which meets the additional elements of claim[] 11." Pet. 39 (citing Ex. 1003, 8:25–26, 10:38–39).

The evidence supports Petitioner's argument regarding claim 11. Tomalin teaches coating a core wire by electroplating. *See, e.g.*, Ex. 1003, 8:25–27; 10:38–40. Therefore, Tomalin teaches the limitation of claim 11.

Regarding claim 12, which depends from claim 10, it further requires, "the first metal includes one selected from the group consisting of copper, brass, and a copper alloy, and the second metal includes one selected from the group consisting of zinc, aluminum, tin, and an alloy thereof." Ex. 1003, 18:12–16. Petitioner argues "Tomalin discloses a core wire material of copper or brass and plating zinc on the core material which meets the additional element of claim[] 12." Pet. 39 (citing Ex. 1003, 3:53–54, 3:61–62).

The evidence supports Petitioner's argument regarding claim 12. Tomalin discloses that a first metal, that is, the metal composing an EDM wire's core, can be copper, brass, or a copper alloy; and that a second metal, that is, an alloy formed by diffusion between a copper containing core and a zinc coating, can be a zinc alloy. *See, e.g.*, Ex. 1003, 5:49–57, 5:63–64, 8:61–67, 12:5–31, Fig. 9. Therefore, Tomalin teaches the limitation of claim 12.

We concluded above that claim 10, like claim 2 and for the same reasons, would have been obvious over Tomalin and Nishioka and, for the reasons set forth above, we also conclude claims 11 and 12, depending from claim 10, are unpatentable as obvious under 35 U.S.C. § 103(a) over Tomalin and Nishioka.

F. MOTION TO AMEND

As a contingency, Patent Owner moves to amend the ’872 patent’s claims to add substitute claim 16 to replace claim 10, in the event claim 10 is determined unpatentable, which it has been. Mot. Amend 2. Patent Owner’s Motion to Amend also included a second substitute claim 17. At oral argument, the panel inquired of Patent Owner’s proposed substitute claim 17 as set forth in its Motion to Amend. Hr’g Tr. 40:24–41:10. When asked about apparent inconsistencies in the proposed substitute claim 17, Patent Owner stated, “I think we’ll drop claim 17 . . . [r]ather than go forward with it.” *Id.* at 41:8–10. We conclude Patent Owner’s Motion to Amend is rendered moot and is, therefore, dismissed with respect to substitute claim 17, and we do not further address the patentability of that substitute claim. We address proposed substitute claim 16 below.

In an *inter partes* review, amended claims are not added to a patent as of right, but rather must be proposed as a part of a motion to amend. 35 U.S.C. § 316(d). The Board must assess the patentability of proposed substitute claims “without placing the burden of persuasion on the patent owner.” *Aqua Prods., Inc. v. Matal*, 872 F.3d 1290, 1328 (Fed. Cir. 2017) (en banc); *see* “Guidance on Motions to Amend in view of *Aqua Products*” (Nov. 21, 2017) (https://www.uspto.gov/sites/default/files/documents/guidance_on_motions_to_amend_11_2017.pdf) (“Guidance”). Subsequent to the issuance of *Aqua Products* and the Board’s Guidance, the Federal Circuit issued a decision in *Bosch Automotive Service Solutions, LLC v. Matal*, 878 F.3d 1027 (Fed. Cir. 2017) (“*Bosch*”), as well as a follow-up Order amending that decision on rehearing. *See Bosch Auto. Serv.*

Sols., LLC v. Iancu, Order on Petition for Panel Rehearing, No. 2015-1928 (Fed. Cir. Mar. 15, 2018).

In accordance with *Aqua Products*, the Board's Memorandum, and *Bosch*, Patent Owner does not bear the burden of persuasion to demonstrate the patentability of the substitute claims presented in the motion to amend. Rather, ordinarily, "the petitioner bears the burden of proving that the proposed amended claims are unpatentable by a preponderance of the evidence." *Bosch*, 878 F.3d at 1040 (as amended on rehearing); *see Lectrosonics, Inc. v. Zaxcom, Inc.*, IPR2018-01129, Paper 15 at 3–4 (PTAB Feb. 25, 2019) (precedential). The Board itself also may justify any finding of unpatentability by reference to evidence of record in the proceeding. *Id.* (citing *Aqua Products*, 872 F.3d at 1311 (O'Malley, J.)). Thus, the Board determines whether substitute claims are unpatentable by a preponderance of the evidence based on the entirety of the record, including any opposition made by the Petitioner.

Notwithstanding the foregoing, Patent Owner's proposed substitute claims must meet the statutory requirements of 35 U.S.C. § 316(d) and the procedural requirements of 37 C.F.R. § 42.121. *Lectrosonics, Inc. v. Zaxcom, Inc.*, IPR2018-01129, Paper 15 (PTAB Feb. 25, 2019) (precedential). Accordingly, Patent Owner must demonstrate: (1) the amendment proposes a reasonable number of substitute claims; (2) the proposed claims are supported in the original disclosure; (3) the amendment responds to a ground of unpatentability involved in the trial; and (4) the amendment does not seek to enlarge the scope of the claims of the patent or introduce new subject matter. *See* 35 U.S.C. § 316(d); 37 C.F.R. § 42.121.

We analyze Patent Owner's proposed substitute claim in view of these standards of law.

Proposed substitute claim 16 reads as follows:

> 16. (Substitute for original claim 10) The method of claim 9, wherein, in the forming of the grain on the surface of the electrode wire for electro-discharge machining, the core wire material is erupted together with a first alloy material, so that the grain including the core wire material, the first alloy material, and the second alloy material is formed <u>on the surface of the electrode wire for electro-discharge machining</u>.

Mot. Amend 32 (claim listing). Although the entirety of claim 16 would be newly added so as to replace claim 10, we understand the underlined portion of the claim language above to be Patent Owner's identification of the language added respective of claim 10 and, further, that the parenthetical would not be included.

Petitioner argues that proposed substitute claim 16 would have been obvious over all four grounds set forth in the Petition. Pet. Opp. Mot. Amend 1–3. We agree with Petitioner and conclude the added claim element, which requires the claimed "grain including the core wire material, the first alloy material, and the second alloy material" to be "formed on the surface of the electrode wire" does not render the proposed substitute claim patentable over the prior art of record.

Proposed substitute claim 16 is essentially the same as claim 2, which we concluded above would have been obvious over Tomalin and Nishioka, and, therefore, unpatentable under 35 U.S.C. § 103(a). Patent Owner presents essentially the same arguments for the patentability of claim 16 as for claim 2. Mot. Amend 11–24. For the same reasons as set forth above regarding Petitioner's Ground 1 and the unpatentability of claim 2 over

Tomalin and Nishioka, we conclude proposed substitute claim 16 would likewise have been unpatentable over this prior art combination. *See supra* Sections III.D and III.E.1. Therefore, we deny Patent Owner's Contingent Motion to Amend.

IV. CONCLUSION

Petitioner has demonstrated that claims 1–13 and 15 of the '872 patent would have been obvious under 35 U.S.C. § 103(a) over the cited Tomalin-Nishioka prior art combination. Having found that all challenged claims, 1–13 and 15, are unpatentable for obviousness under Petitioner's Ground 1, we decline to address Petitioner's other challenges that the '872 patent's claims are unpatentable for obviousness based on other prior art combinations, for example, Groos and Grandy, or combinations requiring ASM Handbook as a reference rather than mere evidence. *See SAS Inst., Inc. v. Iancu*, 138 S. Ct. 1348, 1359 (2018) (holding that a petitioner "is entitled to a final written decision addressing all of the claims it has challenged"); *see also Beloit Corp. v. Valmet Oy*, 742 F.2d 1421, 1423 (Fed. Cir. 1984) (holding that once a dispositive issue is decided, there is no need to decide other potentially dispositive issues); *see also SZ DJI Tech. Co., LTD. v. Drone-Control, LLC*, Case IPR2018-00207, Paper 44 at 30–33 (PTAB June 11, 2019) (discussing basis for declining consideration of other grounds when all challenged claims are shown to be unpatentable); *cf. In re Gleave*, 560 F.3d 1331, 1338 (Fed. Cir. 2009) (not reaching other grounds of unpatentability after affirming anticipation ground).

In summary, on Petitioner's unpatentability challenges:[12]

Claims	35 U.S.C. §	Reference(s)/Basis	Claims Shown Unpatentable	Claims Not shown Unpatentable
1–13, 15	103(a)	Tomalin, Nishioka	1–13, 15	
Overall Outcome			1–13, 15	

In summary, in Patent Owner's Motion to Amend:

Motion to Amend Outcome	Claim(s)
Original Claims Cancelled by Amendment	10
Substitute Claims Proposed in the Amendment	16, 17
Substitute Claims: Motion to Amend Granted	
Substitute Claims: Motion to Amend Denied	16
Substitute Claims: Not Reached (dismissed)	17

ORDER

Accordingly, it is hereby:

ORDERED that Petitioner has demonstrated by a preponderance of the evidence that claims 1–13 and 15 of the '872 patent are *unpatentable*;

FURTHER ORDERED that Patent Owner's Contingent Motion to Amend (Paper 16) is *denied*; and

[12] Should Patent Owner wish to pursue amendment of the challenged claims in a reissue or reexamination proceeding subsequent to the issuance of this decision, we draw Patent Owner's attention to the April 2019 *Notice Regarding Options for Amendments by Patent Owner Through Reissue or Reexamination During a Pending AIA Trial Proceeding*. *See* 84 Fed. Reg. 16654 (Apr. 22, 2019). If Patent Owner chooses to file a reissue application or a request for reexamination of the challenged patent, we remind Patent Owner of its continuing obligation to notify the Board of any such related matters in updated mandatory notices. *See* 37 C.F.R. § 42.8(a)(3), (b)(2).

FURTHER ORDERED that, because this is a Final Written Decision, any party to the proceeding seeking judicial review of the decision must comply with the notice and service requirements of 37 C.F.R. § 90.2.

FOR PETITIONER:

Reginald J. Hill
Benjamin J. Bradford
Ian M. Moodie
JENNER & BLOCK LLP
rhill@jenner.com
bbradford@jenner.com
imoodie@jenner.com

FOR PATENT OWNER:

John K. Park
Mark L. Sutton
PARK LAW FIRM
park@parklaw.com