Trials@uspto.gov
571-272-7822

Paper 35
Entered: March 12, 2020

UNITED STATES PATENT AND TRADEMARK OFFICE

BEFORE THE PATENT TRIAL AND APPEAL BOARD

RUCKUS WIRELESS, INC., BELKIN INTERNATIONAL, INC.,
NETGEAR, INC., and ROKU, INC.,
Petitioner,

v.

HERA WIRELESS S.A.,
Patent Owner.

IPR2018-01739
Patent 8,295,400 B2

Before THOMAS L. GIANNETTI, ROBERT L. KINDER, and
JOHN A. HUDALLA, *Administrative Patent Judges*.

HUDALLA, *Administrative Patent Judge*.

JUDGMENT
Final Written Decision
Determining All Challenged Claims Unpatentable
Denying Patent Owner's Motion to Amend
35 U.S.C. § 318(a)

Ruckus Wireless, Inc., Belkin International, Inc., Netgear, Inc., and Roku, Inc. (collectively, "Petitioner") filed a Petition requesting an *inter partes* review of claims 1 and 2 of U.S. Patent No. 8,295,400 B2 (Ex. 1001,

"the '400 patent").[1] Paper 1 ("Pet."). Patent Owner, Hera Wireless S.A. ("Patent Owner"), filed a Preliminary Response. Papers 8 ("Prelim. Resp."). Taking into account the arguments presented in Patent Owner's Preliminary Response, we determined that the information presented in the Petition established that there was a reasonable likelihood that Petitioner would prevail with respect to its unpatentability challenges. Pursuant to 35 U.S.C. § 314, we instituted this proceeding on March 14, 2019, as to all challenged claims and all grounds of unpatentability. Paper 19 ("Dec. on Inst.").

During the course of trial, Patent Owner did not file a Patent Owner Response. Nonetheless, Patent Owner filed a contingent motion to amend (Paper 25, "Mot. to Amend") proposing to substitute claim 3 and 4 for claims 1 and 2, respectively, if we determined claims 1 and 2 to be unpatentable. Petitioner filed an Opposition to the motion to amend Paper 27 ("Pet. Opp."). In addition, Patent Owner filed a Reply (Paper 28, "PO Reply"), and Petitioner filed a Sur-reply (Paper 29, "Pet. Sur-reply"). An oral hearing was held on December 13, 2019, and a transcript of the hearing is included in the record. Paper 34 ("Tr.").

Petitioner filed Declarations of Christopher J. Hansen, Ph.D., with its Petition (Ex. 1002) and its Opposition to the Motion to Amend (Ex. 1034). Patent Owner filed a Declaration of Jacob Sharony, Ph.D., with its Preliminary Response. Ex. 2001.

We have jurisdiction under 35 U.S.C. § 6. This decision is a Final Written Decision under 35 U.S.C. § 318(a) as to the patentability of claims 1

---

[1] Amazon.com, Inc., was also a petitioner at the time the Petition was filed. Before institution of *inter partes* review, we granted a joint motion to terminate the proceeding as to Amazon.com, Inc. Paper 13.

and 2 of the ’400 patent. For the reasons discussed below, Petitioner has demonstrated by a preponderance of the evidence that claims 1 and 2 of the ’400 patent are unpatentable. We also *deny* Patent Owner’s motion to amend.

I. BACKGROUND

A. Real Parties-in-Interest

Petitioner identifies Ruckus Wireless, Inc., Belkin International, Inc., Amazon.com, Inc.,[2] Netgear, Inc., Roku, Inc., ARRIS International plc, ARRIS Enterprises LLC, ARRIS Solutions, Inc., ARRIS International Limited, and CommScope Holding Company, Inc. as the real-parties-in-interest. Pet. 2; Paper 21, 2. Patent Owner identifies Hera Wireless S.A. and Sisvel UK Limited as the real-parties-in-interest. Paper 6, 2; Paper 7, 2; Paper 23, 2.

B. Related Proceedings

The parties identify several district court proceedings concerning the ’400 patent: *Hera Wireless S.A. v. Amazon.com, Inc.*, 1:17-cv-00947 (D. Del.); *Hera Wireless S.A. v. ARRIS Group, Inc.*, 1:17-cv-00948 (D. Del.); *Hera Wireless S.A. v. Belkin Int’l, Inc.*, 1:17-cv-00949 (D. Del.); *Hera Wireless S.A. v. Buffalo Americas, Inc.*, 1:17-cv-00950 (D. Del.); *Hera Wireless S.A. v. Netgear, Inc.*, 1:17-cv-00951 (D. Del.); *Hera Wireless S.A.*

[2] *See supra* note 1.

v. Roku, Inc., 1:17-cv-00952 (D. Del.); *Hera Wireless S.A. v. Lenovo Holding Co., Inc.*, 1:17-cv-01088 (D. Del.); and *Hera Wireless S.A. v. LG Electronics, Inc.*, 1:17-cv-01089 (D. Del.). Pet. 2–3; Paper 7, 2; Paper 23, 2.

The ’400 patent is also the subject of co-pending IPR2018-01543, filed by Intel Corporation (“the Intel IPR”). Pet. 73. A Final Written Decision in the Intel IPR is being entered concurrently with this Decision.

Furthermore, Petitioner and others have filed petitions seeking *inter partes* review of several patents held by Patent Owner, including: IPR2018-01371 (challenging U.S. Patent No. 7,962,103); IPR2018-01372 (challenging U.S. Patent No. 8,412,115); IPR2018-01373 (challenging U.S. Patent No. 8,934,851); IPR2018-01418 (challenging U.S. Patent No. 7,962,103); IPR2018-01419 (challenging U.S. Patent No. 8,415,115); IPR2018-01420 (challenging U.S. Patent No. 8,934,851); IPR2018-01421 (challenging U.S. Patent No. 8,934,851); IPR2018-01657 (challenging U.S. Patent No. 9,270,024); IPR2018-01686 (challenging U.S. Patent No. 8,737,377); IPR2018-01687 (challenging U.S. Patent No. 8,737,377); IPR2018-01700 (challenging U.S. Patent No. 7,369,878); IPR2018-01701 (challenging U.S. Patent No. 7,454,234); IPR2018-01702 (challenging U.S. Patent No. 7,873,389); and IPR2018-01732 (challenging U.S. Patent No. 9,270,024).

C. The ’400 patent

The ’400 patent is titled “Receiving Method and Apparatus, and Communication System Using the Same.” Ex. 1001, code (54). The patent relates to a method and apparatus for improving the efficiency of a “mixed-mode” wireless communication system that includes Multiple-Input

Multiple-Output ("MIMO") and legacy 802.11a ("target") radio devices. *Id.* at 1:58–2:22. The '400 patent recognizes the existence of prior art mixed-mode Orthogonal Frequency Division Multiplexing ("OFDM") communication systems capable of supporting MIMO and target devices operating on the same frequency band. *Id.* at 1:13–2:6. The patent explains, however, that "when the traffic of burst signals in the MIMO system becomes heavy, the power consumed by the [non-MIMO, target] receiving apparatus increases even though the receiving apparatus does not demodulate the effective burst signals." *Id.* at 2:8–12. To address this shortcoming of the prior art, the '400 patent describes a method and apparatus for reducing the power consumption of a target radio device that receives a MIMO signal. *Id.* at 2:16–22.

The '400 patent discloses combining a legacy 802.11a target burst format, including a preamble, control signal, and data, with MIMO-specific signals in order to create a MIMO burst format. Ex. 1001, 9:37–47. Specifically, the patent teaches that "the packet signal in a MIMO system is such that a preamble of the target system, a control signal of the target system, a control signal of the MIMO system, a preamble of the MIMO system and data of the MIMO system are assigned in this order." *Id.* at 9:37–43. The patent further explains that a target radio device determines whether a received burst signal is a target signal or a MIMO signal, and stops processing if a MIMO control signal is received. *Id.* at 9:55–67, 13:66–14:4.

Figures 4A and 4B depicting the burst formats disclosed in the '400 patent are reproduced below.

FIG.4A

TARGET STS	TARGET LTS	TARGET SIGNAL	TARGET DATA

FIG.4B

TARGET STS	TARGET LTS	TARGET SIGNAL	MINO SIGNAL	1ST MIMO-STS	1ST MIMO-LTS	1ST MIMO-DATA
				2ND MIMO-STS	2ND MIMO-LTS	2ND MIMO-DATA

Figure 4A depicts the burst format for a target system corresponding to the traffic channel of 802.11a (Ex. 1001, 11:47–49), and Figure 4B shows the burst format of a MIMO system having two transmit antennas in accord with the claimed invention (*id.* at 12:12–16). The "Target STS" and "Target LTS" signals included in each of Figures 4A and 4B are short and long training signals that correspond to the preamble of the target system. *Id.* at 11:49–56, 12:6–9. The "Target signal" present in each Figure constitutes the control signal for the target system. *Id.* The "Target data" is the message portion of an 802.11a burst signal. *Id.* at 11:56–57. Figure 4B additionally includes a MIMO control signal, designated "MIMO signal," as well as two MIMO preambles, each incorporating a short and long training signal: 1st MIMO-STS and 1st MIMO-LTS for transmission over the first antenna, and 2nd MIMO-STS and 2nd MIMO-LTS, for transmission over the second antenna. *Id.* at 12:12–35.

The '400 patent describes various ways in which a target radio device can determine whether a burst signal is in legacy 802.11a or MIMO format. The embodiments most relevant to the challenged claims rely on subcarriers reserved for pilot signals. In this regard, the '400 patent discloses using known pilot signals assigned to predetermined subcarriers in an OFDM system so that the same pilot signal carrying subcarriers are used in target

and MIMO systems. Ex. 1001, 20:14–19, 20:21–27. The patent exemplifies embodiments in which both the target and MIMO systems use the same OFDM subcarriers for pilot signals as 802.11a: -21, -7, 7, and 21. *Id.* at 20:49–57. The ’400 patent also discloses using the same modulation scheme for the pilot signals in both target and MIMO systems. *Id.* at 20:58–62. The ’400 patent teaches, however, that target and MIMO pilot signals have different patterns in order to allow target radio devices to identify whether a signal is a target or MIMO signal. For example, the ’400 patent describes an embodiment in which the target signal uses the same pilot pattern as 802.11a, but for the MIMO signal, the pilots are inverted. *Id.* at 21:4–14.

The ’400 patent also teaches that the multiple antennas of a MIMO transmitter may transmit the same information in the same order (i.e., the same burst signal) but with individual signals shifted cyclically left or right, using a technique known as cyclic delay diversity (“CDD”). Ex. 1001, 17:11–55.

The ’400 patent claims priority to two Japanese patent applications dating to as early as September 10, 2004. *Id.*, code (30). The U.S. application that led to the ’400 patent was filed on September 9, 2005. *Id.*, code (22). As discussed below, Petitioner establishes that, at a minimum, its asserted references qualify as prior art relative to either (1) the September 9, 2005, filing date of the U.S. application; or (2) the September 10, 2004, date of the earlier Japanese patent application (i.e., the earliest possible effective filing date). *Id.*, codes (22), (30).

D. Illustrative Claim

The ’400 patent includes two claims, each of which is independent. Claim 2, reproduced below, is illustrative of the claimed subject matter.

> 2. A transmitting method for transmitting an OFDM signal, comprising:
>
> generating a burst signal having a first burst format where a first Non-MIMO training signal, a first Non-MIMO signal, a MIMO signal, a MIMO training signal, and first data are arranged in the stated order; and
>
> transmitting the burst signal, wherein
>
> a subcarrier carrying a first pilot signal included by frequency-division multiplexing in the first data in the first burst format is the same as a subcarrier carrying a second pilot signal included by frequency-division multiplexing in second data in a second format where a second Non-MIMO training signal, a second Non-MIMO signal, and the second data are arranged in the stated order,
>
> a modulation scheme of the first pilot signal is the same as a modulation scheme of the second pilot signal,
>
> a pattern of the first pilot signal is different from a pattern of the second pilot signal, and
>
> the transmitting transmits the burst signal from a plurality of antennas such that the signal transmitted from a given one antenna is shifted in timing with respect to the signal transmitted from another antenna in a cyclical manner.

Ex. 1001, 26:22–42. Claim 1 recites an apparatus for performing the method of claim 2. *Id.* at 25:40–26:21.

E. Prior Art

Petitioner relies on the following prior art:

> IEEE 802.11-04/0886r0, IEEE P802.11 Wireless LANs, *WWiSE Proposal: High throughput extension to the 802.11 Standard* (Aug. 13, 2004) (Ex. 1004, “WWiSE”);

IEEE Std 802.11a-1999 (R2003) (Supplement to IEEE Std 802.11-1999) *Part 11: Wireless LAN Medium Access Control (MAC) and Physical Layer (PHY) specifications: High-speed Physical Layer in the 5 GHz Band* (June 12, 2003) (Ex. 1005, "802.11a");

U.S. Patent No. 7,995,455 B1, filed July 20, 2004, issued Aug. 9, 2011 (Ex. 1006, "Narasimhan");

U.S. Patent No. 7,372,913 B2, filed July 21, 2005, issued May 13, 2008 (Ex. 1007, "van Zelst"); and

IEEE 802.11-04/889r0, *TGn Sync Proposal Technical Specification* (Aug. 13, 2004) (Ex. 1008, "TGn-Sync").

F. The Instituted Grounds

We instituted *inter partes* review of claims 1 and 2 of the '400 patent on the following grounds (Dec. on Inst. 55), which are all the grounds presented in the Petition (Pet. 26):

Claims Challenged	35 U.S.C. §	References
1, 2	103(a)[3]	WWiSE, 802.11a
1, 2	103(a)	TGn-Sync, 802.11a
1, 2	103(a)	Narasimhan, van Zelst

II. ANALYSIS

A. Legal Standards

A claim is unpatentable under 35 U.S.C. § 103(a) if the differences between the claimed subject matter and the prior art are such that the subject

[3] The Leahy-Smith America Invents Act ("AIA"), Pub. L. No. 112-29, 125 Stat. 284, 287–88 (2011), amended 35 U.S.C. § 103. Because the effective filing date of the '783 patent is before March 16, 2013 (the effective date of the relevant amendment), the pre-AIA version of § 103 applies.

matter, as a whole, would have been obvious at the time the invention was made to a person having ordinary skill in the art to which said subject matter pertains. *See KSR Int'l Co. v. Teleflex Inc*., 550 U.S. 398, 406 (2007). The question of obviousness is resolved on the basis of underlying factual determinations, including (1) the scope and content of the prior art; (2) any differences between the claimed subject matter and the prior art; (3) the level of skill in the art; and (4) where in evidence, so-called secondary considerations.[4] *See Graham v. John Deere Co.*, 383 U.S. 1, 17–18 (1966). We also recognize that prior art references must be "considered together with the knowledge of one of ordinary skill in the pertinent art." *In re Paulsen*, 30 F.3d 1475, 1480 (Fed. Cir. 1994) (quoting *In re Samour*, 571 F.2d 559, 562 (CCPA 1978)). We analyze Petitioner's obviousness contentions with the principles identified above in mind.

B. Level of Ordinary Skill in the Art

In the Decision on Institution, we determined that a person of ordinary skill in the art would have had a Master of Science in Electrical Engineering or an equivalent field, 2–3 years of experience in the field of wireless communications, and familiarity with the IEEE SA 802.11 Wireless LAN standards. Dec. on Inst. 10–11 (citing Ex. 1002 ¶ 43; Ex. 2001 ¶ 26). Neither party disputes our determination. We discern no reason to change our determination and apply it for purposes of this Decision.

[4] The record does not contain any evidence of secondary considerations of nonobviousness.

C. Claim Interpretation

Because this *inter partes* review is based on a petition filed before November 13, 2018,[5] we construe the claims by applying the broadest reasonable interpretation in light of the specification. 37 C.F.R. § 42.100(b) (2018); *see Cuozzo Speed Techs., LLC v. Lee*, 136 S. Ct. 2131, 2144–46 (2016). Under the broadest reasonable interpretation standard, and absent any special definitions, claim terms are given their ordinary and customary meaning, as would have been understood by one of ordinary skill in the art in the context of the entire disclosure. *See In re Translogic Tech. Inc.*, 504 F.3d 1249, 1257 (Fed. Cir. 2007). Any special definitions for claim terms or phrases must be set forth "with reasonable clarity, deliberateness, and precision." *Paulsen*, 30 F.3d at 1480.

In our Decision on Institution, we interpreted the limitation "a subcarrier carrying a first pilot signal . . . is the same as a subcarrier carrying a second pilot signal" in claims 1 and 2. Dec. on Inst. 13–16. We noted that "a subcarrier carrying a first pilot signal" pertains to a MIMO transmission, whereas "a subcarrier carrying a second pilot signal" refers to a target (non-MIMO) transmission. *Id.* at 13 (citing Ex. 1001, 25:43–26:13, 26:23–35). Regarding the recited sameness of these subcarriers, we determined that the limitation "require[s] that at least one subcarrier . . . carrying a pilot signal in

[5] On October 11, 2018, the USPTO revised its rules to harmonize the Board's claim construction standard with that used in federal district court. Changes to the Claim Construction Standard for Interpreting Claims in Trial Proceedings Before the Patent Trial and Appeal Board, 83 Fed. Reg. 51,340 (Oct. 11, 2018) (codified at 37 C.F.R. 42.100(b) (2019)). This rule change applies only to petitions filed after November 13, 2018, however. Thus, the revised claim construction standard does not apply to this proceeding. *Id*.

a MIMO system is the same as at least one subcarrier carrying a pilot signal in a target system." *Id.* at 16. The parties do not dispute this determination, and we discern no reason to change it. Accordingly, we adopt our interpretation and analysis for this limitation from the Decision on Institution.

At institution, we also interpreted the limitation "a modulation scheme of the first pilot signal is the same as a modulation scheme of the second pilot signal" in claims 1 and 2. Dec. on Inst. 16–18. We declined to read into this limitation a requirement that the modulation scheme used for the MIMO and target pilot signals must yield the same signal point constellation for those pilot signals. *See id.* at 17–18. Accordingly, we interpreted this limitation

> to require that a modulation scheme applied to the at least one pilot signal in a MIMO system that is carried on the same subcarrier as the at least one pilot signal in a target system is the same as a modulation scheme applied to that at least one pilot signal in the target system.

Id. Again, the parties do not dispute this determination, and we discern no reason to change it. Accordingly, we adopt our interpretation and analysis for this limitation from the Decision on Institution.

We determine that no other terms require explicit construction. *See, e.g.*, *Nidec Motor Corp. v. Zhongshan Broad Ocean Motor Co.*, 868 F.3d 1013, 1017 (Fed. Cir. 2017) ("[W]e need only construe terms 'that are in controversy, and only to the extent necessary to resolve the controversy' . . . ." (quoting *Vivid Techs., Inc. v. Am. Sci. & Eng'g, Inc.*, 200 F.3d 795, 803 (Fed. Cir. 1999))).

D. Obviousness Ground Based on WWiSE and 802.11a

Petitioner contends the subject matter of claims 1 and 2 would have been obvious over the combination of WWiSE and 802.11a. Pet. 28–40.

1. 802.11a

802.11a is a supplement to the IEEE 802.11, i.e., "Wi-Fi," standard that modified the standard to incorporate OFDM and improve throughput. Ex. 1005, i, 3. 802.11a discloses that "[t]he system uses 52 subcarriers that are modulated using binary or quadrature phase shift keying (BPSK/QPSK), 16-quadrature amplitude modulation (QAM), or 64-QAM." *Id.* at 3. 802.11a further explains:

> In each OFDM symbol, four of the subcarriers are dedicated to pilot signals in order to make the coherent detection robust against frequency offsets and phase noise. These pilot signals shall be put in subcarriers -21, -7, 7 and 21. The pilots shall be BPSK modulated by a pseudo binary sequence to prevent the generation of spectral lines. The contribution of the pilot subcarriers to each OFDM symbol is described in 17.3.5.9.

Id. at 22. More particularly, 802.11a explains that the pattern of values for the four pilot signals is 1, 1, 1, -1 (*id.* at 22 (equation 24)), and that the sequence of pilot signals is multiplied by a pseudorandom sequence defined in equation 25 of 802.11a to control polarity, and subsequently transmitted using BPSK modulation (*id.* at 22–23).

The data frame, i.e., Physical Layer Convergence Procedure protocol data units (PPDU), format defined by 802.11a is depicted in Figure 107, which is reproduced below.

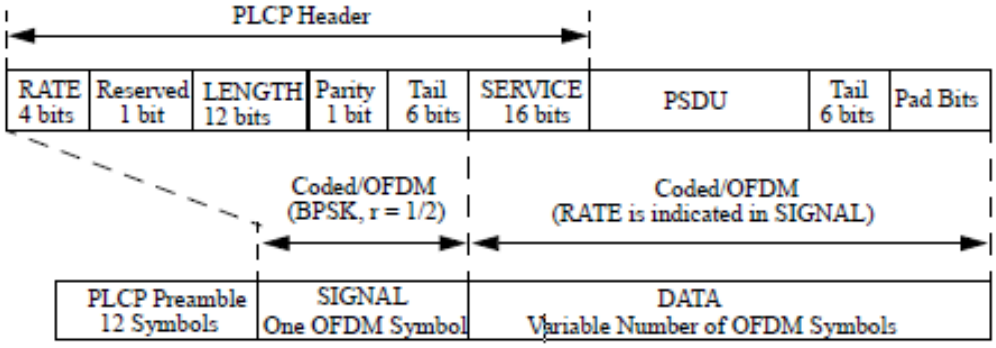

Figure 107—PPDU frame format

As illustrated in Figure 107 of 802.11a above, the PPDU frame includes a Physical Layer Convergence Protocol (PLCP) preamble, which is "composed of 10 repetitions of a 'short training sequence' (used for AGC convergence, diversity selection, timing acquisition, and coarse frequency acquisition in the receiver) and two repetitions of a 'long training sequence' (used for channel estimation and fine frequency acquisition in the receiver), preceded by a guard interval (GI)." Ex. 1005, 7. Subsequent to the PLCP preamble, the PPDU frame includes a BSPK encoded SIGNAL field that incorporates RATE and LENGTH fields. *Id.* at 8. A DATA field follows the SIGNAL field. *Id.*

802.11a also discloses a transmitter and receiver for the OFDM physical layer. Figure 118 of 802.11a is reproduced below.

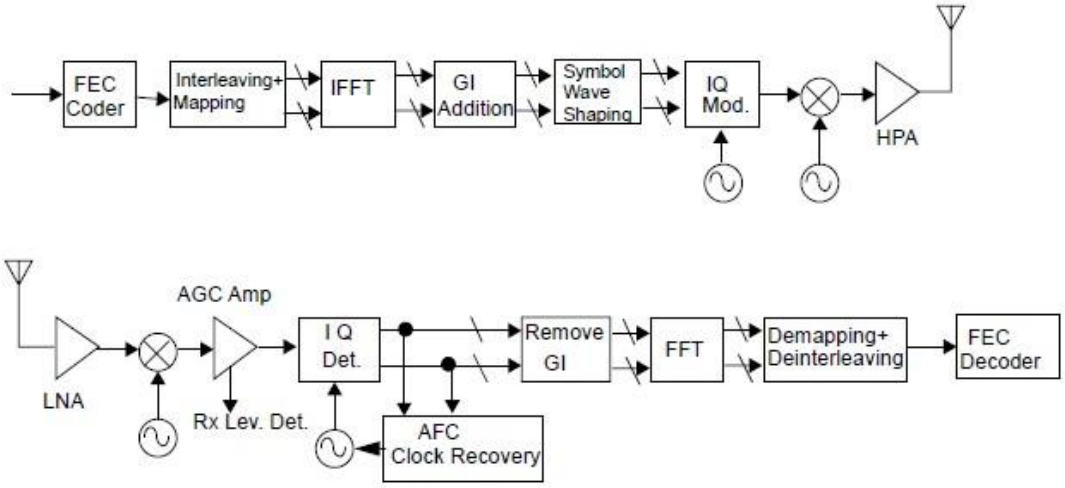

Figure 118—Transmitter and receiver block diagram for the OFDM PHY

Figure 118 shows block diagrams for a transmitter (top) and receiver (bottom) for the OFDM physical layer. Ex. 1005, 24. 802.11a additionally describes the process for generating a burst signal, including steps for encoding, interleaving, mapping, Fourier transformation, guard interval addition, quadrature modulation, preamble generation, and combination with the remainder of a burst signal. *Id.* at 7–8, 54–83.

Petitioner contends 802.11a qualifies as prior art under, *inter alia*, 35 U.S.C. § 102(b) based on its publication in 1999. Pet. 26–27. Petitioner references 802.11a's International Standard Book Number (ISBN) and copyright date as indicators of publication. *Id.* at 27. Petitioner also cites testimony from Dr. Hansen for the proposition that, in 1999, IEEE adopted 802.11a as an amendment to the 802.11 standard. *Id.* at 6 (citing Ex. 1002 ¶¶ 56, 140).

The face of 802.11a indicates a copyright date of 1999 and states "Approved 16 September 1999" and "Published 30 December 1999." Ex. 1005, 1. It also includes the ISBN referenced by Petitioner. *Id.*

Dr. Hansen testifies about the prominence of IEEE standards, including those in the area of wireless networking. Ex. 1002 ¶¶ 43, 46. He also testifies about how the IEEE 802.11 standard evolved to 802.11a. *Id.* ¶¶ 46–47, 56, 140; *see also* Ex. 2001 ¶ 46 (Dr. Sharony referring to 802.11a as "a 1999 amendment to the IEEE 802.11 standard"). In addition, WWiSE and TGn-Sync both acknowledge and extend the teachings of 802.11a, and both of these references themselves qualify as prior art. *See* Ex. 1004, 1; Ex. 1008, 17; *see infra* §§ II.D.2, II.E.1. We further note that the "Related Art" section of the '400 patent specification admits that 802.11a was a known "wireless standard[]." Ex. 1001, 1:13–18. Taken together these indicate that 802.11a was a published industry standard. Patent Owner does not dispute the prior art status of 802.11a. Thus, we are persuaded that 802.11a qualifies as prior art under § 102(b) because its publication date in 1999 is more than one year before the U.S. filing date of the application that led to the '400 patent, which is September 9, 2005. Ex. 1001, code (22); Ex. 1005, 1.

2. WWiSE

WWiSE is a proposed high throughput extension to the IEEE 802.11 standard submitted to the 802.11 Task Group N ("TGn") during development of the 802.11n standard. Ex. 1004, 10; Ex. 2004, 2.[6] WWiSE discloses a Medium Access Control ("MAC") and a Physical Layer ("PHY") for a MIMO-OFDM system. Ex. 1004, 10. WWiSE explains that the disclosed "MIMO-OFDM PHY draws from the basic OFDM PHY defined

[6] Exhibit 2004 does not include page numbers. We refer to this exhibit as if the pages were numbered sequentially, beginning with 1.

in Clause 17 [of 802.11a], and builds its extensions to two, three, and four transmit antenna modes (hereafter known as 2TX, 3TX, and 4TX, respectively), operating in 20 MHz bandwidth." *Id.* at 28.

WWiSE discloses a "mixed-mode" transmission scheme in which a "special PLCP frame format may be used to cause non-MIMO-OFDM stations to defer the medium to MIMO-OFDM traffic." Ex. 1004, 30. Figure 004 of WWiSE, reproduced below, depicts such a frame format for use in a "mixed-mode" system having multiple antenna modes.

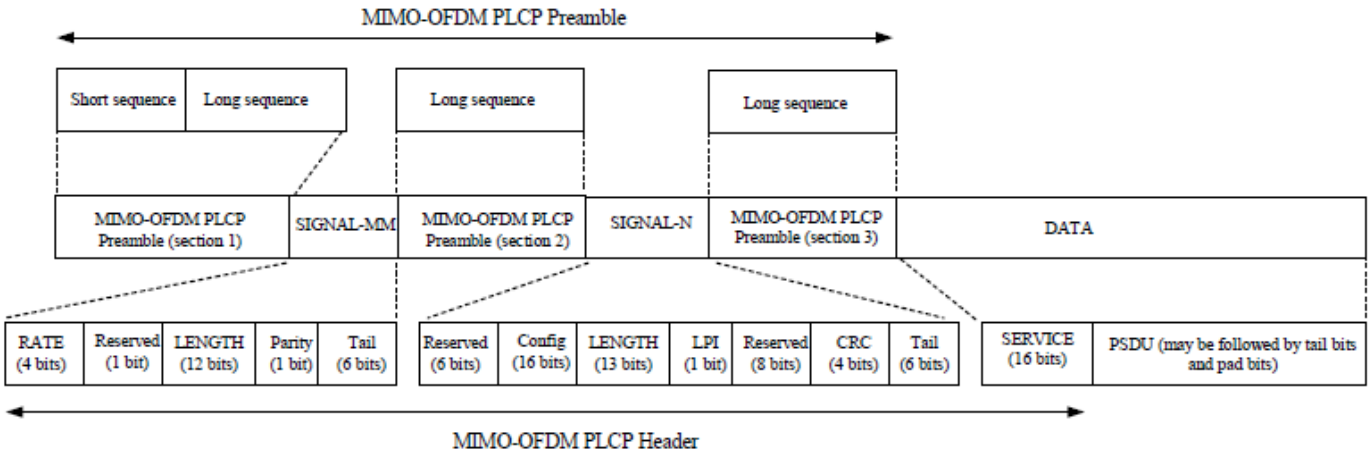

Figure 004– PPDU frame format: Mixed mode access in the 3TX and 4TX modes (20 MHz)

As shown in Figure 004, WWiSE disclosed a mixed mode PPDU frame format including the following fields: MIMO-OFDM PLCP Preamble (section 1), SIGNAL-MM, MIMO-OFDM PLCP Preamble (section 2), SIGNAL-N, MIMO-OFDM PLCP Preamble (section 3), and DATA. Ex. 1004, 32.

The PPDU encoding process disclosed by WWiSE allows for the production of multiple spatial streams, across which data may be encoded. Ex. 1004, 33. In this regard, WWiSE discloses the use of cyclic time shifts for signals in the PLCP preamble. *Id.* at 37. Such cyclic time shifts are illustrated in Figure 010 of WWiSE, reproduced below.

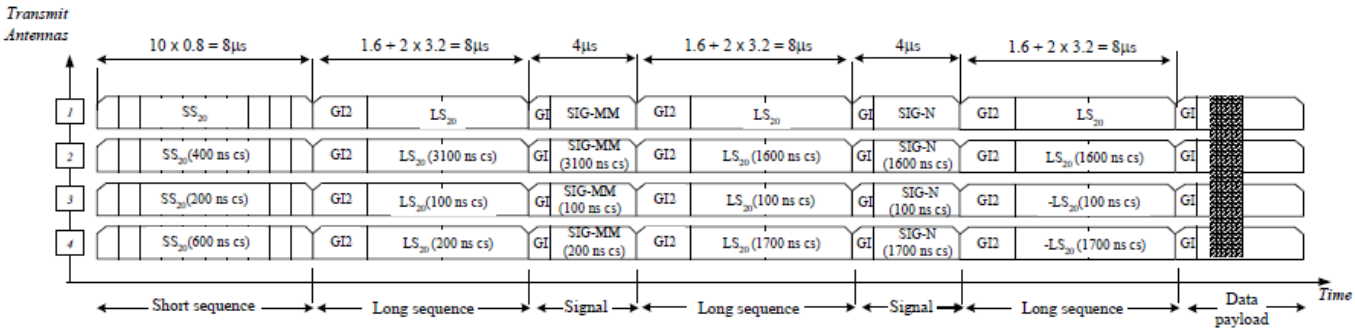

Figure 010 – MIMO-OFDM Training structure for N_{TX} = 3, 4, 20 MHz, mixed mode operation

As shown in Figure 010, for a mixed-mode transmission from four antennas in the 20 MHz bandwidth channels, the short training symbol for each antenna is cyclically shifted by 200 ns, and the long training symbol is cyclically shifted by 100 ns. Ex. 1004, Fig. 010.

WWiSE discloses transmitting pilot tones using subcarriers -21 and 21 for transmissions in the 20 MHz bandwidth. Ex. 1004, 47. In particular, WWiSE explains that "[t]he subcarriers with index -21 and +21 are dedicated in all 20 MHz modes to transmit pilot signals during each OFDM symbol, in order to increase robustness against frequency offsets and phase noise." *Id.* WWiSE also discloses that "[t]he subcarrier modulation mapping shall follow IEEE 802.11a-1999 clause 17.3.5.7 for each transmit antenna." *Id.*

WWiSE additionally provides a transmitter block diagram for the MIMO-OFDM PHY, shown in Figure 024, which is reproduced below.

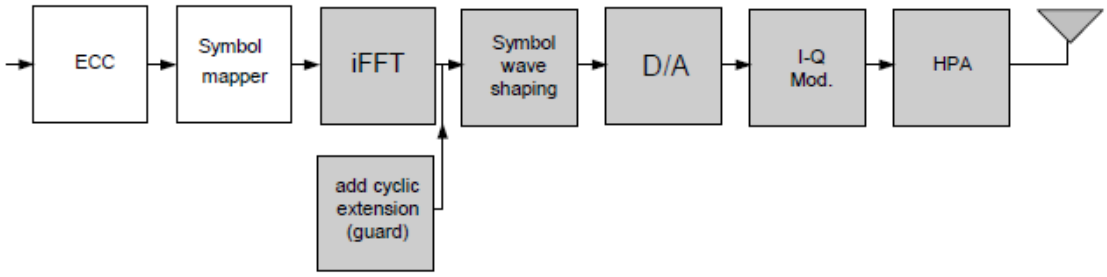

Figure 024 – Transmitter block diagram for the MIMO-OFDM PHY

WWiSE explains that "[t]he blocks that are shaded in [Figure 024] may be replicated N_{TX} times in a MIMO-OFDM system with N_{TX} transmit antennas." Ex. 1004, 50.

Petitioner contends WWiSE qualifies as prior art under, *inter alia*, 35 U.S.C. § 102(b) based on its publication date of August 13, 2004. Pet. 18–19 (citing, *inter alia*, Ex. 1002 ¶¶ 108, 159, 214), 26. In support of its contention, Petitioner cites testimony from Dr. Hansen, who was an author of WWiSE and a member of the IEEE 802.11 Working Group from which WWiSE arose. Ex. 1002 ¶¶ 21, 86, 94. He further testifies that WWiSE was uploaded to an IEEE file server on the August 13, 2004, deadline for certain proposals set by the working group, and was publicly accessible from an IEEE website thereafter. *Id.* ¶¶ 86, 92–93, 99–108.

We are persuaded that WWiSE qualifies as prior art under § 102(b) based on Dr. Hansen's unrebutted testimony. WWiSE's publication date of August 13, 2004, is more than one year before the U.S. filing date of the application that led to the '400 patent, which is September 9, 2005. Ex. 1001, code (22); Ex. 1002 ¶ 108.

3. Claim 1

We now consider whether Petitioner has met its burden of proving unpatentability by a preponderance of the evidence under 35 U.S.C. § 316(e).

The preamble of claim 1 recites "[a] transmitting apparatus for transmitting an OFDM signal." Ex. 1001, 25:41–42. Petitioner contends that WWiSE discloses "an apparatus that includes a PHY for an OFDM system that provided a wireless LAN with communication capabilities

including transmitting data." Pet. 28 (citing Ex. 1002 ¶ 239; Ex. 1004, 28; Ex. 1005, 3). We agree that WWiSE discloses an OFDM system that transmits. *See* Ex. 1004, 28. Thus, even if the preamble were considered limiting, the combination of WWiSE and 802.11a teaches the preamble of claim 1.

Claim 1 further recites "a generator operative to generate a burst signal having a first burst format where a first Non-MIMO training signal, a first Non-MIMO signal, a MIMO signal, a MIMO training signal, and first data are arranged in the stated order." Ex. 1001, 25:43–26:3. Petitioner asserts that the mixed-mode PPDU encoding process disclosed by WWiSE, and the corresponding structures disclosed in WWiSE for performing that process, satisfy this claim element. Pet. 29 (citing Ex. 1002 ¶¶ 164–184, 243, 244; Ex. 1004, 33, 36, 42–44, 47, 50). For example, Petitioner cites the MIMO-OFDM PHY transmitter block diagram depicted in Figure 024 of WWiSE. *Id.* (citing Ex. 1002 ¶ 243; Ex. 1004, 50). Petitioner also explains that the WWiSE PPDU encoding process "created message preambles and message headers, demultiplexed data into separate spatial streams, encoded the data, modulated the data and inserted pilot signals, converted the signals to time domain via an inverse Fourier transform process, and added cyclic shifts and guard intervals." *Id.* (citing Ex. 1002 ¶¶ 164–184; Ex. 1004, 33, 36, 42–44, 47).

As to the recited subcomponents of the claimed first burst format, Petitioner contends that the mixed-mode frame format taught by WWiSE satisfies this aspect of claim 1. Pet. 30–33. For example, Petitioner asserts that each of the required subcomponents is disclosed by the WWiSE PPDU frame format for mixed-mode access in the 3TX and 4TX modes (20 MHz)

depicted in Figure 004. Pet. 30 (citing Ex. 1002 ¶ 243; Ex. 1004, 32). Figure 004 of WWiSE, as annotated by Petitioner, is reproduced below.

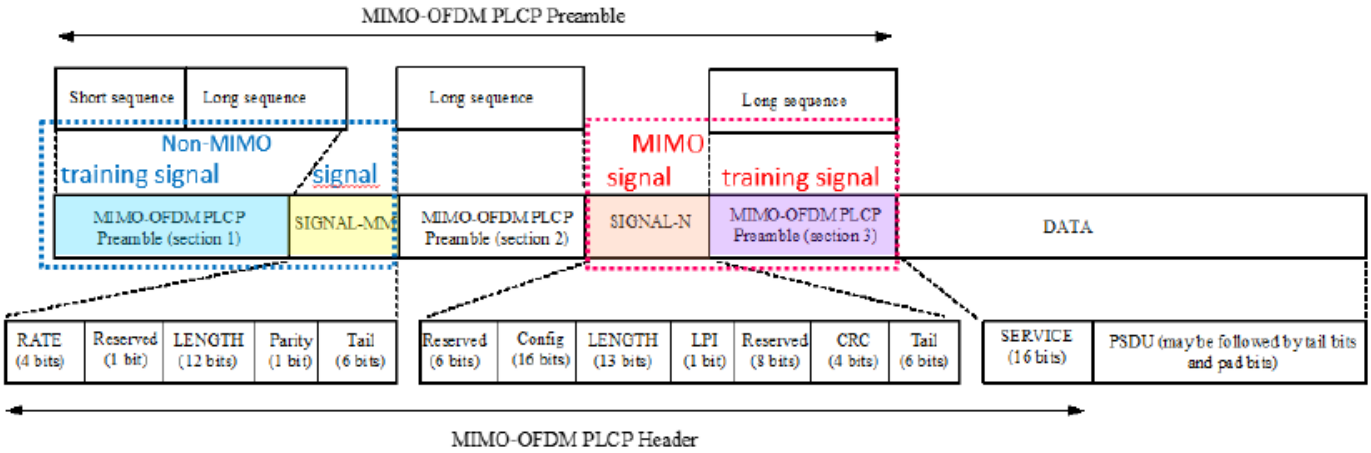

Figure 004– PPDU frame format: Mixed mode access in the 3TX and 4TX modes (20 MHz)

According to Petitioner, and as reflected in Petitioner's annotations, the PPDU frame format shown in Figure 004

> includes a MIMO-OFDM PLCP Preamble that included a non-MIMO training signal (i.e., short sequence SS followed by a long sequence LS), followed by a non-MIMO signal (SIGNAL-MM field), followed by a MIMO signal that includes a SIGNAL-N field, followed by a MIMO training signal (MIMO-OFDM PLCP Preamble with an LS), followed by DATA.

Pet. 30–31 (citing Ex. 1002 ¶ 246; Ex. 1004, 37, 40–41). Petitioner additionally explains how the above described frame subcomponents satisfy the frame format required by claim 1. Pet. 31–33 (citing, *inter alia*, Ex. 1002 ¶¶ 247–255; Ex. 1004, 37, 40–41).

We are persuaded by Petitioner's analysis, and we find that the combination of WWiSE and 802.11a teaches the "generator" limitation of claim 1.

Claim 1 further recites "a transmitter operative to transmit the burst signal generated by the generator." Ex. 1001, 26:4–5. Petitioner cites the

MIMO-OFDM PHY transmitter block diagram of WWiSE Figure 024. According to Petitioner, the block diagram of Figure 024 "includes digital to analog conversion, modulation, amplification, and transmission." Pet. 33 (citing Ex. 1002 ¶ 256; Ex. 1004, 50). Petitioner further represents that "Figure 024 includes the steps of converting a PPDU generated by the PPDU encoding process . . . from a baseband signal to an RF signal and then transmitting." *Id.* (citing Ex. 1002 ¶ 257; Ex. 1004, 33, 36, 50–51). Thus, we find that the combination of WWiSE and 802.11a teaches the "transmitter" limitation of claim 1.

Claim 1 further recites:

> a subcarrier carrying a first pilot signal included by frequency-division multiplexing in the first data in the first burst format of the burst signal generated by the generator is the same as a subcarrier carrying a second pilot signal included by frequency-division multiplexing in second data in a second format where a second Non-MIMO training signal, a second Non-MIMO signal, and the second data are arranged in the stated order.

Ex. 1001, 26:6–13. As set forth above, we construe this claim limitation as requiring that at least one subcarrier carrier carrying a pilot signal in a MIMO system is the same as at least one subcarrier carrying a pilot signal in a target system. *See supra* § II.C. Petitioner contends the combination of WWiSE and 802.11a teaches this limitation. Pet. 34–35.

Turning first to the requirement for "second data in a second format where a second Non-MIMO training signal, a second Non-MIMO signal, and the second data are arranged in the stated order" (Ex. 1001, 26:11–13), Petitioner asserts that 802.11a "discloses a legacy frame format with a PLCP Preamble, a SIGNAL, and DATA, *i.e.*, the claimed non-MIMO target format." Pet. 34 (citing Ex. 1002 ¶¶ 260–261; Ex. 1005, 7–8, Fig. 107).

With regard to the requirement that "a subcarrier carrying a first pilot signal . . . is the same as a subcarrier carrying a second pilot signal" (Ex. 1001, 26:6–10), Petitioner observes that "[i]n both *WWiSE* and *802.11a*, the OFDM subcarriers -21 and 21 were used for pilot signals." Pet. 35 (citing Ex. 1002 ¶ 265); *see also id.* (citing Ex. 1004, 47 (identifying -21 and 21 as subcarriers dedicated to pilot signals in WWiSE's 20 MHz mode)); Ex. 1005, 22 (identifying -21, -7, 7, and 21, as subcarriers dedicated to pilot signals in 802.11a).

We are persuaded by Petitioner's analysis, and we find that the combination of WWiSE and 802.11a teaches the "subcarrier" limitation of claim 1.

Claim 1 further recites "a modulation scheme of the first pilot signal is the same as a modulation scheme of the second pilot signal." Ex. 1001, 26:14–15. Petitioner notes that 802.11a expressly discloses modulating pilot signals using BPSK. Pet. 35 (citing Ex. 1002 ¶ 266; Ex. 1005, 22). Petitioner further notes that WWiSE "discloses that 'subcarrier modulation mapping shall follow IEEE 802.11a-1999 clause 17.3.5.7 for each transmit antenna,'" in addition to teaching the use of 802.11a's equation 25 to control pilot subcarrier polarity. *Id.* at 35–36 (citing Ex. 1004, 47; Ex. 1005, 23). In light of these teachings, Petitioner contends an ordinarily skilled artisan would have understood that WWiSE and 802.11a use the same BPSK modulation scheme for pilot signals. *Id.* at 36 (citing Ex. 1002 ¶ 267).

We are persuaded by Petitioner's analysis, and we find that the combination of WWiSE and 802.11a teaches the "modulation scheme" limitation of claim 1.

Claim 1 further recites "a pattern of the first pilot signal is different from a pattern of the second pilot signal." Ex. 1001, 26:16–17. Regarding the "second pilot signal," Petitioner cites 802.11a's teaching in equation 25 of using four pilot subcarriers, -27, -7, 7, and 21, that transmit the sequence. Pet. 36 (Ex. 1002 ¶ 269; Ex. 1005, 22–23). Equation 25 of 802.11a is reproduced below.

$$p_{0..126v} = \{1,1,1,1,\ -1,-1,-1,1,\ -1,-1,-1,-1,\ 1,1,-1,1,\ -1,-1,1,1,\ -1,1,1,-1,\ 1,1,1,1,\ 1,1,-1,1,\ 1,1,-1,1,\ 1,-1,-1,1,\ 1,1,-1,1,\ -1,-1,-1,1,\ -1,1,-1,-1,\ 1,-1,-1,1,\ 1,1,1,1,\ -1,-1,1,1,\ -1,-1,1,-1,\ 1,-1,1,1,\ -1,-1,-1,1,\ 1,-1,-1,-1,\ -1,1,-1,-1,\ 1,-1,1,1,\ 1,1,-1,1,\ -1,1,-1,1,\ -1,-1,-1,-1,\ -1,1,-1,1,\ 1,-1,1,-1,\ 1,1,1,-1,\ -1,1,-1,-1,\ -1,1,1,1,\ -1,-1,-1,-1,\ -1,-1,-1\} \quad (25)$$

Ex. 1005, 23. According to Petitioner, equation 25 is a sequence in which "[t]he first element . . . was used in the SIGNAL symbol, while subsequent elements were used for DATA symbols." Pet. 36 (citing Ex. 1002 ¶ 270; Ex. 1005, 23).

Petitioner sets forth the sequence of pilot signals for the first eight OFDM symbols in 802.11a in a table from page 36 of the Petition, which is reproduced below.

OFDM Symbol								
	SIGNAL	Data						
Subcarrier	0	1	2	3	4	5	6	7
-21	1	1	1	1	-1	-1	-1	1
-7	1	1	1	1	-1	-1	-1	1
7	1	1	1	1	-1	-1	-1	1
21	-1	-1	-1	-1	1	1	1	-1

Pet. 36 (citing Ex. 1002 ¶ 271). In this table, Petitioner summarizes the sequence of pilot signals for the first eight OFDM symbols in 802.11a, and Petitioner contends this was the pattern of the second pilot signal. *Id.*

Turning to its analysis of the "first pilot signal," Petitioner asserts that WWiSE "used the same sequence as defined in equation (25) of 802.11a

(above) but altered the sequence based on which antenna was used." *Id.* at 36–37 (citing Ex. 1002 ¶¶ 272–275; Ex. 1004, 47). Petitioner contends that, in three antenna mode, the sequence of pilot signals in WWiSE for the first eight OFDM symbols, i.e., the pattern of the first pilot signal, is illustrated in three tables from page 37 of the Petition, which are reproduced below.

Antenna 1								
OFDM Symbol								
	SIG-N	Data						
Subcarrier	0	1	2	3	4	5	6	7
-21	1	1	-1	-1	-1	-1	1	-1
21	1	-1	-1	1	-1	1	1	1

Antenna 2

OFDM Symbol								
	SIG-N	Data						
Subcarrier	0	1	2	3	4	5	6	7
-21	1	-1	1	-1	-1	1	-1	-1
21	-1	1	-1	1	1	-1	1	1

Antenna 3

OFDM Symbol								
	SIG-N	Data						
Subcarrier	0	1	2	3	4	5	6	7
-21	-1	1	1	-1	1	-1	-1	-1
21	1	1	-1	-1	-1	-1	1	-1

Pet. 37 (citing Ex. 1002 ¶ 276). In these three tables, Petitioner indicates the pattern of pilot signals across three antennas according to WWiSE. *Id.* Referencing these same three tables, Dr. Hansen testifies that "a pattern of the pilot signals in WWiSE was different across each transmit antenna and thus also different from a pattern of the pilot signals transmitted in 802.11a." Ex. 1002 ¶¶ 276–277.

We are persuaded by Petitioner's showing, as supported by Dr. Hansen's unrebutted testimony, that the pattern of 802.11a's pilot signals is different from the pattern of WWiSE's pilot signals. *See* Ex. 1002 ¶¶ 268–277. Thus, we find that the combination of WWiSE and 802.11a teaches the "pattern" limitation of claim 1.

The final limitation in claim 1 recites "the transmitter transmits the burst signal from a plurality of antennas such that the signal transmitted from a given one antenna is shifted in timing with respect to the signal transmitted from another antenna in a cyclical manner." Ex. 1001, 26:18–21. Petitioner cites Figure 10 of WWiSE, which depicts a training structure for a three or four antenna MIMO-OFDM system. Pet. 38 (citing Ex. 1002 ¶ 279; Ex. 1004, 37, 39). Figure 10 of WWiSE, as annotated by Petitioner, is reproduced below.

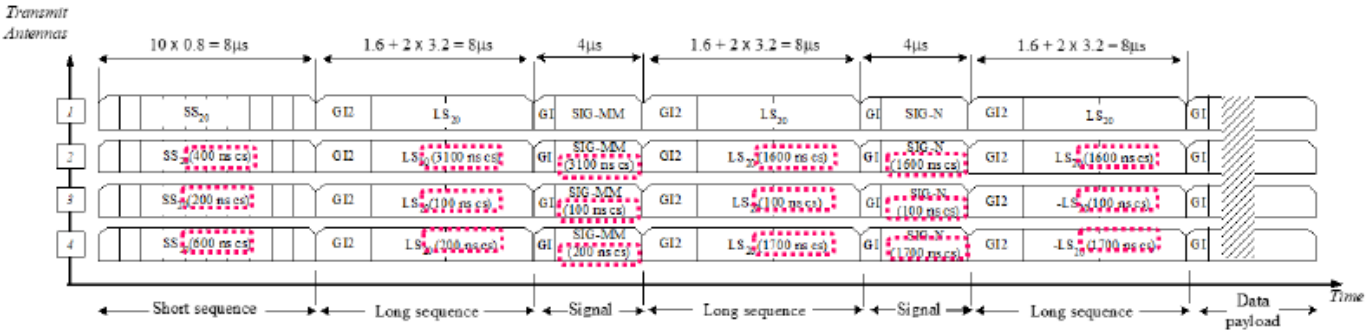

Figure 010 – MIMO-OFDM Training structure for N_{TX} = 3, 4, 20 MHz, mixed mode operation

Pet. 38. Petitioner explains that "*WWiSE* disclosed transmitting a burst signal from multiple antennas, where the MIMO-OFDM PLCP Preamble section 1, the SIGNAL-MM, SIGNAL-N, and MIMO-OFDM PLCP Preamble section 3 signals transmitted from a second antenna were a 'cyclically shifted version of the sequence transmitted from the first antenna.'" *Id.* (citing Ex. 1004, 37, 39). Relying on testimony from Dr. Hansen, Petitioner also contends that "[c]yclic shifts of this type were

known as an example of cyclic delay diversity." *Id.* (citing Ex. 1002 ¶¶ 280–283).

We are persuaded by Petitioner's analysis, and we find that the combination of WWiSE and 802.11a teaches the final limitation of claim 1.

Petitioner contends that an ordinarily skilled artisan would have had reasons to combine WWiSE and 802.11a because "*WWiSE* was a response to a call for proposals to make improvements to *802.11a* and was meant to be backward compatible with 802.11a." Pet. 28 (citing Ex. 1002 ¶ 237). In support of its position, Petitioner cites the teaching in WWiSE that WWiSE "compliant MIMO-OFDM PHY systems shall implement all mandatory and optional data rates defined in Clause 17" (Ex. 1004, 28), i.e., the 802.11a PHY, as well as citation by WWiSE to numerous portions of 802.11a (*see, e.g.*, *id.* at 41–47 (referencing numerous sections in 802.11a)). Relying on Dr. Hansen's testimony, Petitioner contends that an ordinarily skilled artisan would have understood that "*WWiSE* supported all the functionality in 802.11a and was backward compatible with 802.11a, and so would [have] look[ed] to 802.11a to supplement its teachings." Pet. 28 (citing Ex. 1002 ¶ 238). Petitioner further contends that "[b]ecause the teachings of these references were written to be combined, evidence of the reasonableness of the combination, predictably of the solution and probability of success is firmly and undisputedly established." Pet. 28 (citing Ex. 1002 ¶ 238).

WWiSE is a proposed "extension to the 802.11 Standard" (Ex. 1004, Title) to which numerous industry leaders, including Airgo Networks, Bermai, Broadcom, Conexant, STMicroelectronics, and Texas Instruments contributed (*id.* at Contributors). WWiSE expressly discloses that it "draws from the basic OFDM PHY defined in Clause 17 [of 802.11a], and builds its

extensions to two, three, and four transmit antenna modes . . . operating in 20 MHz bandwidth." *Id.* at 28. In addition, as Petitioner points out, WWiSE repeatedly references, and expands upon, the teachings of 802.11a. *Id.* at 41–47. Given WWiSE's express reliance on earlier 802.11 standards and Dr. Hansen's unrebutted testimony about how TGn-Sync is an extension of 802.11a (*see* Ex. 1002 ¶¶ 237–238), we are persuaded that an ordinarily skilled artisan would have had reasons to combine the references to make the claimed subject matter.

Having considered Petitioner's contentions and evidence, we find that the combination of WWiSE and 802.11a teaches every limitation of claim 1. Petitioner also has provided persuasive reasons why an ordinarily skilled artisan would have made its proposed combination. On the entire trial record, we determine Petitioner has shown, by a preponderance of the evidence, that the subject matter of claim 1 would have been obvious over the combination of WWiSE and 802.11a.

4. Claim 2

Claim 2 is a method claim corresponding to claim 1. *Compare* Ex. 1001, 25:41–26:21, *with id.* at 26:22–42. Although claim 2 does not recite a generator or a transmitter, it recites corresponding generating and transmitting steps, as well as all other functions recited in claim 1. Petitioner relies on the same obviousness contentions for claim 2 as for claim 1. *See* Pet. 39–40.

For the same reasons discussed above with respect to claim 1 (*see supra* § II.D.3), we find that the combination of WWiSE and 802.11a teaches every limitation of claim 2. Petitioner also has provided persuasive

reasons why an ordinarily skilled artisan would have made its proposed combination. On the entire trial record, we determine Petitioner has shown, by a preponderance of the evidence, that the subject matter of claim 2 would have been obvious over the combination of WWiSE and 802.11a.

E. Obviousness Ground Based on TGn-Sync and 802.11a

Petitioner contends the subject matter of claims 1 and 2 would have been obvious over the combination of TGn-Sync and 802.11a. Pet. 40–50.

1. TGn-Sync

TGn-Sync is a proposed MIMO extension to the 802.11 standard that was submitted to the 802.11 Task Group n ("TGn") during development of the 802.11n standard. Ex. 1008, 1, 3. TGn-Sync explains that "[t]he PHY techniques used to achieve the higher data rates involve a MIMO evolution of 802.11 OFDM PHY with spatial division multiplexing of spatial streams, and wider bandwidth options." *Id.* at 3. According to TGn-Sync, the "proposal also offers seamless interoperability with 802.11 legacy devices. This interoperability is achieved with an enhanced 802.11 preamble design and efficient PHY and MAC level mechanisms, which also provide robustness and cost-effectiveness." *Id.* In particular, TGn-Sync discloses "full backwards compatibility with existing 802.11a/b/g standards. Our preamble design support[s] PHY layer interoperability with the OFDM preamble from 802.11a/g, while providing a robust mechanism for synchronization of the high throughput data." *Id.* at 17.

TGn-Sync discloses both a legacy 20 MHz PPDU format and a high throughput ("HT"), i.e., MIMO, 20 MHz PPDU format that is interoperable with 802.11a. Ex. 1008, 94. Figure 40 of TGn-Sync is reproduced below.

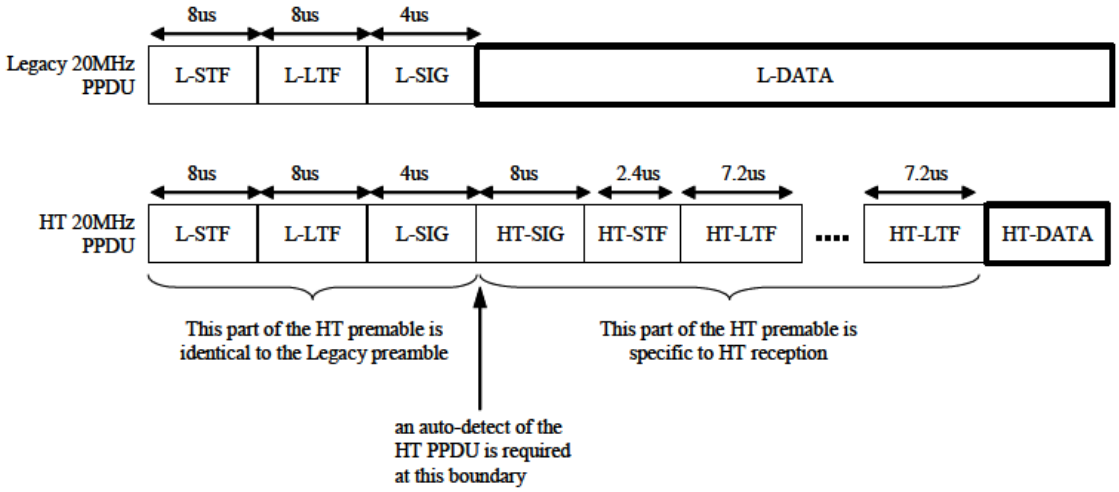

Figure 40 depicts a legacy preamble and an HT-specific preamble. *Id.* Figure 40 shows that the 802.11a legacy non-MIMO burst format includes, in order: a legacy training signal (including "L-STF" and "L-LTF"), a legacy control signal ("L-SIG") and legacy data ("L-DATA"). Ex. 1008, 94. Figure 40 also shows that TGn-Sync's HT burst format, includes, in order: a legacy training signal, a legacy control signal, a MIMO control signal ("HT-SIG"), a HT training signal (including "HT-STF" and "HT-LTF") and HT data ("HT-DATA"). *Id.* at 94, 102, 110, 111–16, Figs. 30, 37, 40.

TGn-Sync also teaches the use of cyclical delay diversity ("CDD") to mitigate beamforming when transmitting the same signal from multiple antennas. Ex. 1008, 101. Figure 46 of TGn-Sync is reproduced below.

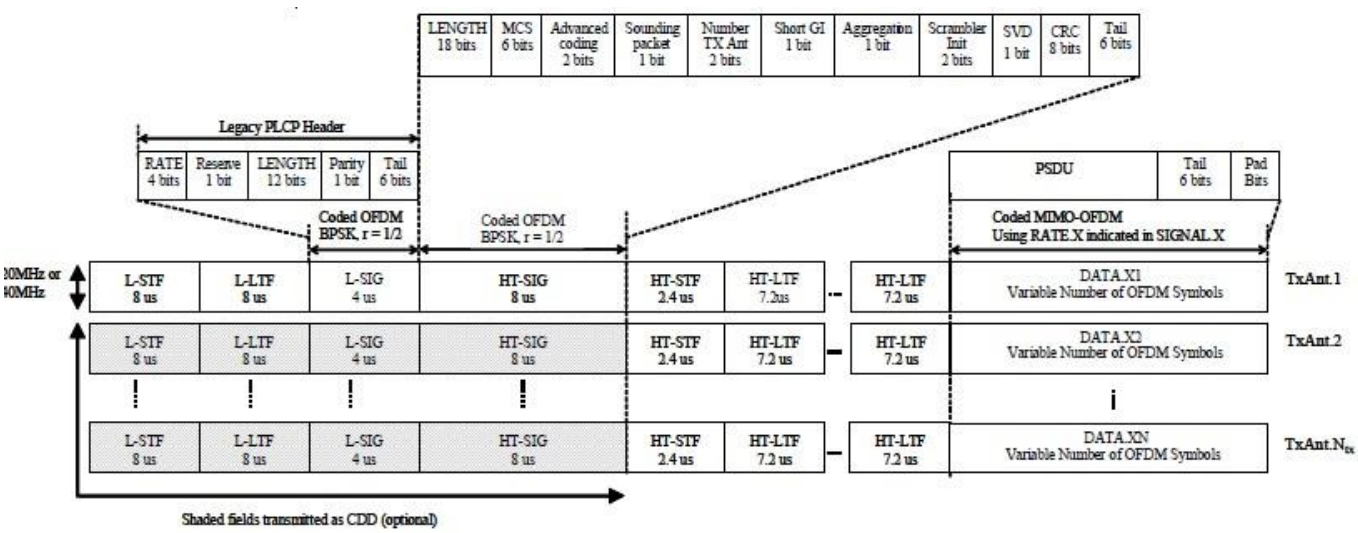

Figure 46 depicts a PPDU format leveraging CDD transmission. *Id.* As illustrated in Figure 46, the shaded fields may be transmitted as CCD. *Id.* TGn-Sync explains that the legacy short and long training fields were "identical" to the respective training fields in 802.11a. *Id.* at 102, 103. With regard to the legacy control signal, TGn-Sync discloses that it has the same format as the 802.11a SIGNAL filed, except that the RATE and LENGTH fields are "spoofed" to prevent legacy stations from accessing the medium during HT frame transmission. *Id.* at 110–11.

TGn-Sync discloses transmitting pilot tones using the same subcarriers as 802.11a: -21, -7, 7, and 21 for transmissions in the 20 MHz bandwidth. Ex. 1008, 122–23. TGn-Sync also teaches that in legacy mode, pilot signals are defined in 802.11a. *Id.* at 123. In HT-mode, TGn-Sync discloses that pilot signals are defined by multiplying the sequence in equation 25 of 802.11a by an additional sequence described in equations 47 and 48 of TGn-Sync. *Id.*

TGn-Sync additionally provides a transmitter block diagram for two-antenna MIMO in 20 MHz, shown in Figure 35, which is reproduced below.

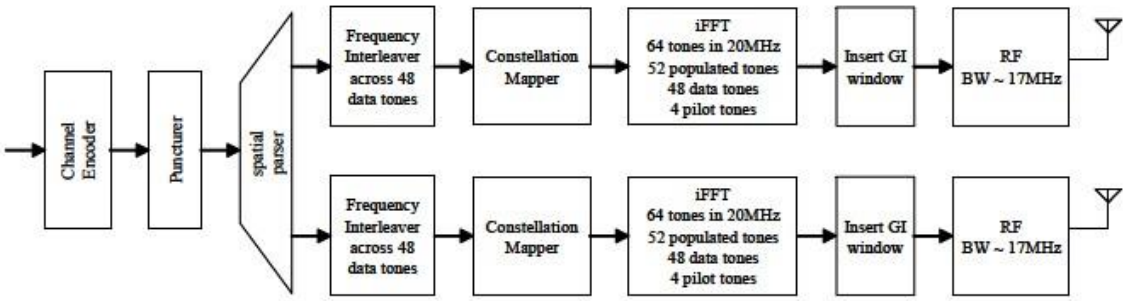

Figure 35: Transmitter Datapath for 2-antenna MIMO in 20MHz

Figure 35 illustrates "[t]he basic mandatory configuration in [the TGn-Sync] PHY proposal for throughput enhancement." Ex. 1008, 92.

Petitioner contends TGn-Sync qualifies as prior art under 35 U.S.C. § 102(b) based on its publication date of August 13, 2004.[7] Pet. 18–19 (citing, *inter alia*, Ex. 1002 ¶¶ 108, 159, 214), 27. In support of its contention, Petitioner again cites testimony from Dr. Hansen, who states that TGn-Sync was subject to the same working group proposal deadline as WWiSE, which was August 13, 2004. Ex. 1002 ¶¶ 92–93, 109. He further testifies that TGn-Sync was submitted by that deadline, and that he downloaded a copy of TGn-Sync from a publicly accessible IEEE website on the same day it was submitted. *Id.* ¶ 109.

We are persuaded that TGn-Sync qualifies as prior art under § 102(b) based on Dr. Hansen's unrebutted testimony. TGn-Sync's publication date of August 13, 2004, is more than one year before the U.S. filing date of the application that led to the '400 patent, which is September 9, 2005. Ex. 1001, code (22); Ex. 1002 ¶ 109.

---

[7] The Petition asserts two different dates as the publication date for TGn-Sync, namely, August 13 and 14, 2004. *Compare* Pet. 18–19, *with id.* at 27. Because the underlying evidence of publication supports the earlier of these two dates, we credit the earlier date, as discussed below. And, in any event, the one-day difference is immaterial to TGn-Sync's status as prior art.

2. Claim 1

We again consider whether Petitioner has met its burden of proving unpatentability by a preponderance of the evidence under 35 U.S.C. § 316(e).

The preamble of claim 1 recites "[a] transmitting apparatus for transmitting an OFDM signal." Ex. 1001, 25:41–42. Petitioner contends that TGn-Sync discloses an "apparatus that uses an OFDM-PHY that provided a wireless LAN with communication capabilities including data." Pet. 41 (citing Ex. 1002 ¶ 371; Ex. 1005, 3; Ex. 1008, 3). Thus, even if the preamble were considered limiting, the combination of TGn-Sync and 802.11a teaches the preamble of claim 1.

Claim 1 further recites "a generator operative to generate a burst signal having a first burst format where a first Non-MIMO training signal, a first Non-MIMO signal, a MIMO signal, a MIMO training signal, and first data are arranged in the stated order." Ex. 1001, 25:43–26:3. For the recited "generator," Petitioner cites TGn-Sync's teaching of a transmitter datapath (as illustrated in Figure 35) for creating burst signals. Pet. 41 (citing Ex. 1002 ¶ 375; Ex. 1008, 92). According to Petitioner, TGn-Sync's transmitter datapath was a modified version of the 802.11a PPDU encoding process. *Id.* (citing Ex. 1002 ¶ 375; Ex. 1008, 92). Petitioner explains that TGn-Sync's transmitter datapath

> first scrambled, encoded, and punctured data bits in the same way as 802.11a, and then demultiplexed data into multiple spatial streams. Each spatial stream was then separately interleaved, modulated, had pilot signals inverted, and converted to time domain using a Fourier transform. Cyclic guard intervals were then inserted, and the resulting signals were forwarded to RF stages for transmission.

Pet. 41–42 (internal citations omitted) (citing Ex. 1002 ¶ 376; Ex. 1008, 113, 117–24).

As to the recited subcomponents of the claimed first burst format, Petitioner cites the "PPDU format leveraging CDD transmission" illustrated in TGn-Sync's Figure 46. Pet. 43–44. Figure 46 of TGn-Sync, as annotated by Petitioner, is reproduced below.

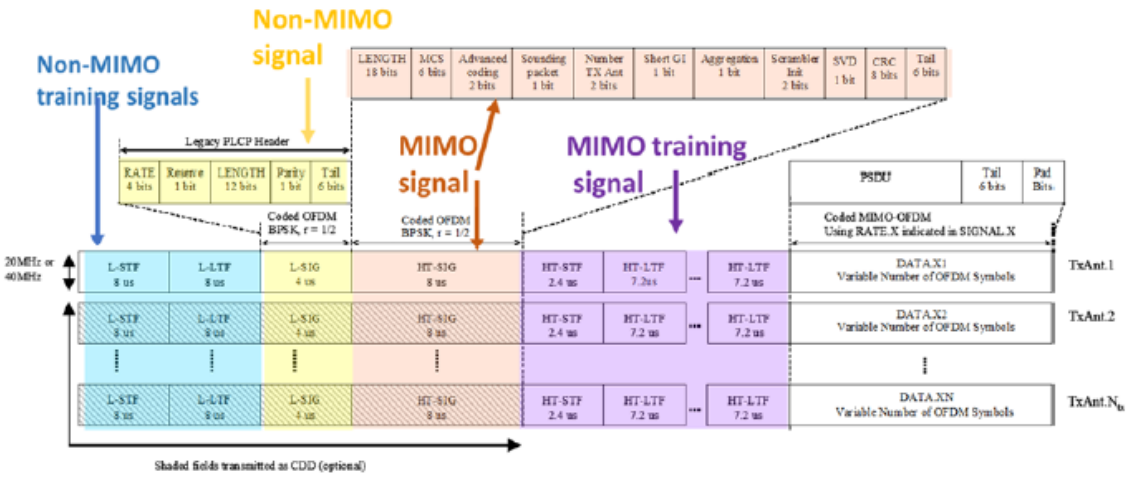

Figure 46: PPDU format leveraging CDD transmission

Pet. 43. According to Petitioner, and as reflected in Petitioner's annotations, the PPDU frame format shown in Figure 46 "began with Legacy Short and Long Training Fields ('L-STF' and 'L-LTF'), which were identical to the short and long training fields in 802.11a." *Id.* (citing Ex. 1008, 100–04). Petitioner likens these to the recited "Non-MIMO training signal" and contends an ordinarily skilled artisan would have considered them as such. *Id.* (citing Ex. 1002 ¶ 380).

Petitioner contends "[a] legacy SIGNAL field ('L-SIG') field followed the training signal, [and] was defined, modulated and encoded according to the procedure in 802.11a." *Id.* (citing Ex. 1008, 101, 110–11).

According to Petitioner, an ordinarily skilled artisan would have considered L-SIG to be a "first Non-MIMO signal." *Id.* (citing Ex. 1002 ¶ 381).

Petitioner contends "[a]n HT-SIG (*i.e.*, high-throughput SIGNAL) field followed the L-SIG, and was dedicated to high throughput mode." *Id.* at 44 (citing Ex. 1008, 101). Petitioner contends an ordinarily skilled artisan would have understood that HT-SIG "is a MIMO signal because it contained MIMO-specific information including the number of spatial streams." *Id.* (citing Ex. 1002 ¶ 382; Ex. 1008, 112–15).

Petitioner contends "[a]n HT Short Training Field ('HT-STF') and at least one HT-LTF followed the HT-SIG, where the HT-STF was used to 'fine tune the AGC for HT MIMO reception' and the number of HT-LTFs were equal to the number of spatial streams." *Id.* (citing Ex. 1008, 104–05). Petitioner contends an ordinarily skilled artisan would have understood "that the HT-STF and the at least one HT-LTF . . . were training signals used for MIMO operation, and are thus a MIMO training signal." *Id.* (citing Ex. 1002 ¶ 383).

Finally, Petitioner likens the recited "first data" to data following the HT training signals in TGn-Sync's Figure 46. *Id.* (citing Ex. 1002 ¶ 384; Ex. 1008, 101–02).

We are persuaded that TGn-Sync's transmitter datapath teaches a generator, and TGn-Sync's PPDU format in Figure 46 teaches the recited subcomponents of the claimed first burst format. *See* Ex. 1002 ¶¶ 375–385; Ex. 1008, 92, 101. Thus, we find that the combination of TGn-Sync and 802.11a teaches the "generator" limitation of claim 1.

Claim 1 further recites "a transmitter operative to transmit the burst signal generated by the generator." Ex. 1001, 26:4–5. Petitioner cites the

transmitter datapath illustrated in Figure 35 of TGn-Sync. Pet. 45. Petitioner contends TGn-Sync's transmitter datapath "includes certain components for transmitting the burst signal, including a block called 'RF BW ~ 17 MHz,' which is responsible for the well-known steps of digital-to-analog conversion, baseband-to-RF conversion, amplification, and transmission." *Id.* (citing Ex. 1002 ¶¶ 386–388; Ex. 1008, 92, 117, 123–24). Thus, we find that the combination of TGn-Sync and 802.11a teaches the "transmitter" limitation of claim 1.

Claim 1 further recites:

> a subcarrier carrying a first pilot signal included by frequency-division multiplexing in the first data in the first burst format of the burst signal generated by the generator is the same as a subcarrier carrying a second pilot signal included by frequency-division multiplexing in second data in a second format where a second Non-MIMO training signal, a second Non-MIMO signal, and the second data are arranged in the stated order.

Ex. 1001, 26:6–13. As discussed above, we construe this claim limitation as requiring that at least one subcarrier carrier carrying a pilot signal in a MIMO system is the same as at least one subcarrier carrying a pilot signal in a target system. *See supra* § II.C. Petitioner contends the combination of TGn-Sync and 802.11a teaches this claim limitation. Pet. 45–47.

Regarding the "second data in a second format where a second Non-MIMO training signal, a second Non-MIMO signal, and the second data are arranged in the stated order" (Ex. 1001, 26:11–13), Petitioner again cites 802.11a's disclosure of a legacy frame format with a PLCP Preamble, a SIGNAL, and DATA. Pet. 45–46 (citing Ex. 1002 ¶¶ 390, 391; Ex. 1005,

7–8, Fig. 107[8]). Turning to the requirement that "a subcarrier carrying a first pilot signal . . . is the same as a subcarrier carrying a second pilot signal" (Ex. 1001, 26:6–10), Petitioner contends 802.11a discloses inserting pilot signals onto pilot subcarriers -21, -7, 7, and 21 in the SIGNAL and DATA fields. Pet. 46 (citing Ex. 1002 ¶¶ 392–393; Ex. 1008, 122–23). Petitioner further contends "*TGn-Sync* discloses inserting pilot signals into specific OFDM subcarriers in each OFDM symbol" and that, in 20MHz mode, TGn-Sync's subcarriers "were the same as in 802.11a: -21, -7, 7, and 21." *Id.* at 46 (citing Ex. 1008, 122–23).

We are persuaded by Petitioner's analysis and find that the combination of TGn-Sync and 802.11a teaches the "subcarrier" limitation of claim 1.

Claim 1 further recites "a modulation scheme of the first pilot signal is the same as a modulation scheme of the second pilot signal." Ex. 1001, 26:14–15. Petitioner asserts that

> *802.11a* teaches that pilot signals in *802.11a*, and thus in the second pilot signal, were BPSK-modulated by a pseudo binary sequence set forth in equation (25). For HT transmissions, *TGn-Sync* teaches using the same pseudo-binary sequence as 802.11a, so a[n ordinarily skilled artisan] would understand that pilot signals in HT transmissions, *i.e.* the first pilot signal, used the same modulation scheme as *802.11a*.

---

[8] In its analysis of this limitation, Petitioner cites to TGn-Sync (Ex. 1008) rather than 802.11a (Ex. 1005) in certain instances. *See* Pet. 45–46. The context makes clear than Petitioner intended to cite to 802.11a. We have corrected Petitioner's citations to correspond to Dr. Hansen's testimony (*see* Ex. 1002 ¶¶ 390–393), Petitioner's similar analysis in the WWiSE–802.11a ground (*see* Pet. 34–35), and the 802.11a reference itself (*see* Ex. 1005, 7–8, 22, Fig. 107).

Pet. 47 (internal citations omitted) (citing Ex. 1002 ¶¶ 399–400; Ex. 1005, 22–23; Ex. 1008, 123). We are persuaded by Petitioner's analysis and find that the combination of TGn-Sync and 802.11a teaches the "modulation scheme" limitation of claim 1.

Claim 1 further recites "a pattern of the first pilot signal is different from a pattern of the second pilot signal." Ex. 1001, 26:16–17. Regarding the "second pilot signal," Petitioner asserts that "[t]he pattern of pilot signals in 802.11a . . . has subcarriers -21, -7, and 7 with the same signal and subcarrier 21 is inverted." Pet. 47 (citing Ex. 1002 ¶¶ 402–404; Ex. 1005, 22). Regarding the "first pilot signal," Petitioner asserts that "[i]n *TGn-Sync*, pilot signals for HT transmissions, *i.e.*, the first pilot signal, varied by spatial stream and subcarrier." Pet. 47 (citing Ex. 1002 ¶¶ 405–406; Ex. 1008, 123). Petitioner further cites Dr. Hansen's testimony regarding a three transmit antenna system based on the teachings of TGn-Sync. *Id.* at 48 (citing, *inter alia*, Ex. 1002 ¶¶ 407–409). Petitioner contends that the patterns of the resulting pilot signal in such a system vary by transmit antenna, and Petitioner illustrates the patterns for antennas 1 and 3 in a table on page 48 of the Petition, which is reproduced below.

	Subcarrier			
Antenna	-21	-7	7	21
1	1	1	1	-1
3	1	-1	1	1

Pet. 48 (citing Ex. 1002 ¶ 407). Petitioner describes the data in the table as follows:

> The pattern of pilot signals on antenna 1, whether transmitting a legacy signal or an HT MIMO signal, was the same as that in *802.11a*. The pattern of antenna 3 when transmitting an HT MIMO signal, however, was different from pilot pattern of

> *802.11a* because subcarrier 21 was inverted for transmissions in *802.11a*, but subcarrier -7 was the subcarrier that was inverted for transmission from antenna three in *TGn-Sync*. Thus, some the patterns of the pilot signal were different for HT Transmissions, the first pilot signal, compared to *802.11a* transmissions, the second pilot signal.

Pet. 48 (internal citations omitted) (citing Ex. 1002 ¶¶ 408–409). We are persuaded by Petitioner's analysis, which is based on Dr. Hansen's unrebutted testimony, and find that the combination of TGn-Sync and 802.11a teaches the "pattern" limitation of claim 1.

The final limitation in claim 1 recites "the transmitter transmits the burst signal from a plurality of antennas such that the signal transmitted from a given one antenna is shifted in timing with respect to the signal transmitted from another antenna in a cyclical manner." Ex. 1001, 26:18–21. Petitioner cites TGn-Sync's Figure 46 MIMO PPDU format discussed above with respect to the "generator" limitation of claim 1. Pet. 48 (citing Ex. 1008, 101). Petitioner explains that TGn-Sync teaches that "frames transmitted from multiple antennas were shifted in time . . . by applying phase shifts across the transmit antenna so that the delay was introduced cyclically and thus create frequency selectivity in the receiver." *Id*. at 48–49 (citing Ex. 1002 ¶¶ 410–411; Ex. 1008, 101). Petitioner also asserts that "[t]he burst signal was transmitted from multiple antennas so that the L-STF and L-LTF, the L-SIG, and the HT-SIG were shifted in a cyclical manner across the antenna array." *Id.* at 49 (citing Ex. 1002 ¶ 412; Ex. 1008, 95).

We are persuaded by Petitioner's analysis, and we find that the combination of TGn-Sync and 802.11a teaches the final limitation of claim 1.

Petitioner contends that an ordinarily skilled artisan would have sought to combine TGn-Sync and 802.11a because "*TGn-Sync* is a response to a call for proposals to make improvements to 802.11a and was meant to be backward compatible with 802.11a." Pet. 40 (citing Ex. 1002 ¶ 369). In this regard, Petitioner notes "*TGn-Sync* cites multiple sections of 802.11a, including the definitions of legacy training signals and the legacy signal, and the behavior for modulation," and explains that an ordinarily skilled artisan necessarily would have considered the teachings of 802.11a when examining TGn-Sync. *Id.* (citing Ex. 1002 ¶ 370; Ex. 1008, 102–04, 110). Relying on Dr. Hansen, Petitioner reasons that "[b]ecause the references were written to be combined, evidence of the reasonableness of the combination, predictably of the solution and probability of success is firmly and undisputedly established." *Id.* (citing Ex. 1002 ¶ 370).

TGn-Sync is a proposed MIMO extension to the 802.11 standard that "offers seamless interoperability with 802.11 legacy devices," including 802.11a. Ex. 1008, 1, 3. Numerous industry leaders, including Agere, Atheros, Cisco, Intel, Nokia, Philips, Samsung, Sony, and Toshiba, contributed to the development of TGn-Sync. *Id.* at 2. In addition, as Petitioner explains, TGn-Sync expressly references numerous sections of 802.11a, and incorporates various aspects of 802.11a into its high throughput transmission standard proposal. Ex. 1008, 102–04, 110; Pet. 40. Given WWiSE's express reliance on earlier 802.11 standards and Dr. Hansen's unrebutted testimony about how TGn-Sync is an extension of 802.11a (*see* Ex. 1002 ¶¶ 369–370), we are persuaded that an ordinarily skilled artisan would have had reasons to combine the references.

Having considered Petitioner's contentions and evidence, we find that the combination of TGn-Sync and 802.11a teaches every limitation of claim 1. Petitioner also has provided persuasive reasons why an ordinarily skilled artisan would have made its proposed combination. On the entire trial record, we determine Petitioner has shown, by a preponderance of the evidence, that the subject matter of claim 1 would have been obvious over the combination of TGn-Sync and 802.11a.

3. Claim 2

Claim 2 is a method claim corresponding to claim 1. *Compare* Ex. 1001, 25:41–26:21, *with id.* at 26:22–42. Although claim 2 does not recite a generator or a transmitter, it recites corresponding generating and transmitting steps, as well as all other functions recited in claim 1. Petitioner relies on the same obviousness contentions for claim 2 as for claim 1. *See* Pet. 49–50.

For the same reasons discussed above with respect to claim 1 (*see supra* § II.E.2), we find that the combination of TGn-Sync and 802.11a teaches every limitation of claim 2. Petitioner also has provided persuasive reasons why an ordinarily skilled artisan would have made its proposed combination. On the entire trial record, we determine Petitioner has shown, by a preponderance of the evidence, that the subject matter of claim 2 would have been obvious over the combination of TGn-Sync and 802.11a.

F. Obviousness Ground Based on Narasimhan and van Zelst

Petitioner contends the subject matter of claims 1 and 2 would have been obvious over the combination of Narasimhan and van Zelst. Pet. 50–71.

1. Narasimhan

Narasimhan is a U.S. patent that describes a scalable MIMO-OFDM PHY employing a number of different techniques, including "space-frequency code matrices for encoding data on multiple sub-streams for transmission on multiple antennas," and a "frame format that includes additional long training OFDM symbols for training additional antennas and for link adaptation and a header with an additional SIGNAL symbol to indicate MIMO-OFDM specific information." Ex. 1006, Abstract.

Narasimhan teaches that its system may be compatible with legacy 802.11a systems and may have "many similarities" to such a legacy system. Ex. 1006, 5:55–57. In this regard, Narasimhan discloses a MIMO-OFDM frame format that includes a number of fields relevant to MIMO and 802.11a transmissions. *Id.* at Fig. 6. In addition, Narasimhan teaches the use of 52 subcarriers (including 48 data subcarriers and 4 pilot subcarriers), and a legacy frame format. *Id.* at 5:57–64. Narasimhan further discloses that the pilot signals are inserted into subcarriers -21, -7, 7, and 21, and modulated per 802.11a phase shift keying. *Id.* at 8:1–5.

2. Van Zelst

Van Zelst is a U.S. patent directed to using pilot signals to "provide the receiver with information about the effects of the communication

channel and/or transmitter impairments and/or receiver impairments on the spatial streams transmitted" in a MIMO-OFDM system. Ex. 1007, Abstract. In this regard, van Zelst discloses generating pilot tone values for data encoded and transmitted over multiple spatial streams that enable a receiver to characterize the communication channel by identifying known pilot signal values to obtain transmit stream diversity benefits. *Id.* at 1:44–61. Stated differently, van Zelst teaches using a distinguishable set of pilot sequences for different spatial streams to benefit from spatial stream diversity. *Id.* at 6:4–18.

Van Zelst describes several methods of generating pilot tone sequences. For example, van Zelst teaches that a Walsh-Hadamard matrix could be used for a two-antenna transmitter that would result in pilot tones for the second spatial stream with the same polarity for even-numbered OFDM symbols and opposite polarity for odd numbered symbols. Ex. 1007, 6:25–35. In other words, van Zelst teaches that for Antenna 2, the polarity of pilot signals in odd-numbered symbols would be inverted relative to the same pilot signals transmitted over Antenna 1. *Id.* at 6:42–55.

3. Claims 1 and 2

In our Decision on Institution, we determined that Petitioner had not demonstrated a reasonable likelihood of prevailing with respect to the Narasimhan–van Zelst ground. Dec. on Inst. 52–54. In our analysis of Petitioner's obviousness contentions (*see* Pet. 50–71), we found there to be

> an irreconcilable conflict between Petitioner's stated rationale for combining Narasimhan and van Zelst, which relies on van Zelst's teaching to vary the pilot signals across antennas, and Petitioner's contention that the proffered combination teaches

> or suggests transmitting the burst signal from a plurality of antennas, as required by the claims.

Dec. on Inst. 54. The record for this ground has not been developed further since the time of institution. Under these circumstances, we determine Petitioner does not prevail at this stage under the higher "preponderance of the evidence" standard. *See* 35 U.S.C. § 316(e). Accordingly, we adopt our analysis from the Decision on Institution (*see* Dec. on Inst. 52–54) and determine Petitioner has not shown, by a preponderance of the evidence, that the subject matter of claims 1 and 2 would have been obvious over the combination of Narasimhan and van Zelst.

III. PATENT OWNER'S CONTINGENT MOTION TO AMEND

Pursuant to 35 U.S.C. § 316(d)(1) and 37 C.F.R. § 42.121(a), Patent Owner moves to replace claims 1 and 2 of the '400 patent with proposed substitute claims 3 and 4, respectively. Mot. to Amend 1. The motion is contingent on our determination as to whether a preponderance of the evidence establishes that claims 1 and 2 of the '400 patent are unpatentable. *Id*. As discussed above, we determine that original claims 1 and 2 of the '400 patent have been shown to be unpatentable by a preponderance of the evidence. *See supra* §§ II.D.3–4, II.E.2–3. Therefore, we proceed to address Patent Owner's contingent motion to amend.

A. Proposed Substitute Claims

Patent Owner's proposed substitute claims 3 and 4 are reproduced below with Petitioner's bracketed labels to identify claim limitations and underlining indicating text added to claims 1 and 2, respectively.

3. [3.P] A transmitting apparatus for transmitting an OFDM signal, comprising:

[3.1] a generator operative to generate a burst signal having a first burst format where a first Non-MIMO training signal, a first Non-MIMO signal, a MIMO signal, a MIMO training signal, and first data are arranged in the stated order; and

[3.2] a transmitter operative to transmit the burst signal generated by the generator,

[3.3] wherein a first subcarrier carrying a first pilot signal included by frequency-division multiplexing in the first data in the first burst format of the burst signal generated by the generator is the same as a second subcarrier carrying a second pilot signal included by frequency-division multiplexing in second data in a second format,

[3.4] wherein the first pilot signal is assigned to the first subcarrier which corresponds to the same frequency as the second subcarrier carrying the second pilot signal,

[3.5] wherein a second Non-MIMO training signal, a second Non-MIMO signal, and the second data are arranged in the stated order,

[3.6] wherein a modulation scheme of the first pilot signal is the same as a modulation scheme of the second pilot signal and MIMO pilot signals have a same signal point constellation as target pilot signals,

[3.7] wherein the first pilot signal and the second pilot signal are both assigned to subcarrier numbers: -21, -7, 7 and 21,

[3.8] wherein a pattern of the first pilot signal is different from a pattern of the second pilot signal, and

[3.9] the transmitter transmits the burst signal from a plurality of antennas such that the signal transmitted from a given one antenna is shifted in timing with respect to the signal transmitted from another antenna in a cyclical manner,

[3.10] wherein the transmitted burst signal is configured to suppress an increase in power consumption at a receiving

apparatus even if the transmitted burst signal is not compatible with the receiving apparatus.

4. [4.P] A transmitting method for transmitting an OFDM signal, comprising:

[4.1] generating a burst signal having a first burst format where a first Non-MIMO training signal, a first Non-MIMO signal, a MIMO signal, a MIMO training signal, and first data are arranged in the stated order; and

[4.2] transmitting the burst signal,

[4.3] wherein a first subcarrier carrying a first pilot signal included by frequency-division multiplexing in the first data in the first burst format of the burst signal generated by the generator is the same as a second subcarrier carrying a second pilot signal included by frequency-division multiplexing in second data in a second format,

[4.4] wherein the first pilot signal is assigned to the first subcarrier which corresponds to the same frequency as the second subcarrier carrying the second pilot signal,

[4.5] wherein a second Non-MIMO training signal, a second Non-MIMO signal, and the second data are arranged in the stated order,

[4.6] wherein a modulation scheme of the first pilot signal is the same as a modulation scheme of the second pilot signal and MIMO pilot signals have a same signal point constellation as target pilot signals,

[4.7] wherein the first pilot signal and the second pilot signal are both assigned to subcarrier numbers: -21, -7, 7 and 21,

[4.8] wherein a pattern of the first pilot signal is different from a pattern of the second pilot signal, and

[4.9] the transmitting transmits the burst signal from a plurality of antennas such that the signal transmitted from a given one antenna is shifted in timing with respect to the signal transmitted from another antenna in a cyclical manner,

> [4.10] <u>wherein the transmitted burst signal is configured to suppress an increase in power consumption at a receiving apparatus even if the transmitted burst signal is not compatible with the receiving apparatus</u>.

Mot. to Amend 11–14. In our analysis below, we adopt Petitioner's bracketed labels to more efficiently identify limitations.

B. Procedural Requirements

"Before considering the patentability of any substitute claims, . . . the Board first must determine whether the motion to amend meets the statutory and regulatory requirements set forth in 35 U.S.C. § 316(d) and 37 C.F.R. § 42.121." *Lectrosonics, Inc. v. Zaxcom, Inc.*, IPR2018-01129, Paper 15, 4–8 (PTAB Feb. 25, 2019) (precedential) ("*Lectrosonics*").

1. Claim Listing

The motion to amend includes a claim listing, as required by 37 C.F.R. § 42.121(b). Mot. to Amend 11–14; *Lectrosonics* at 8.

2. Reasonable Number of Substitute Claims

We now consider whether the motion to amend proposes a reasonable number of substitute claims. 35 U.S.C. § 316(d)(1)(B). "There is a rebuttable presumption that a reasonable number of substitute claims per challenged claim is one (1) substitute claim." *Lectrosonics* at 4–5 (citing 37 C.F.R. § 42.121(a)(3)). The Petition challenges 2 claims, the motion to amend proposes 2 substitute claims. Mot. to Amend 1. We determine that the number of proposed claims is reasonable.

3. Respond to a Ground of Unpatentability Involved in the Trial

Next, we consider whether the proposed substitute claims respond to a ground of unpatentability involved in this trial. *Lectrosonics* at 5–6. Patent Owner argues the motion to amend is responsive to the instituted grounds insofar as it proposes adding, *inter alia*, the following limitation to claims 1 and 2, resulting in proposed substitute claims 3 and 4:

> <u>wherein the transmitted burst signal is configured to suppress an increase in power consumption at a receiving apparatus even if the transmitted burst signal is not compatible with the receiving apparatus</u>.

Mot. to Amend 8–9. Patent Owner also highlights this added limitation in asserting that that the proposed substitute claims are patentable over the references in the instituted grounds. *See id.* at 9–10. Based on Patent Owner's showing, we determine that the amended language in the proposed substitute claims is responsive to the grounds of unpatentability involved in this trial.

4. No Enlargement to the Scope of the Claims

We also consider the breadth of the substitute claims. "A motion to amend may not present substitute claims that enlarge the scope of the claims of the challenged patent or introduce new subject matter." *Lectrosonics* at 6–7 (citing 35 U.S.C. § 316(d)(3); 37 C.F.R. § 41.121(a)(2)(ii)). For both substitute claims, Patent Owner's proposed amendment adds several limitations, including the one reproduced in the prior paragraph. We determine that these added limitations in proposed substitute claims 3 and 4 result in claims that are narrower than claims 1 and 2, respectively.

5. No New Matter

We now consider whether the substitute claims 3 and 4 have introduced new matter. "[T]he Board requires that a motion to amend set forth written description support in the originally filed disclosure of the subject patent for each proposed substitute claim, and also set forth support in an earlier filed disclosure for each claim for which benefit of the filing date of the earlier filed disclosure is sought." *Lectrosonics* at 7 (citing 37 C.F.R. § 42.121(b)(1)–(2)). For this requirement, Patent Owner must cite "to the *original disclosure of the application*, as filed, rather than to the patent as issued." *Id.* at 8 (emphasis added).

a. The Priority Document to Which Patent Owner Must Cite for Written Description Support

In the motion to amend, Patent Owner provides a listing indicating where each limitation of the substitute claims is supported in the specification of the '400 patent as issued. *See* Mot. to Amend 5–8. Although Patent Owner states that "[c]itations for support are also made to the Patent Application as originally filed" (Mot. to Amend 5 (citing Ex. 1003, 1–93)), Patent Owner's listing does not include specific citations to the originally filed U.S. application. Patent Owner also mentions the two Japanese patent applications to which the '400 patent claims priority, but does not include specific citations to the Japanese applications. *Id.* (citing Ex. 1003, 108–85). In addition, the Japanese patent applications in the instant record appear in the Japanese language, and Patent Owner does not include English translations. *See* Ex. 1003, 108–85.

Petitioner argues Patent Owner's failure to specify written description support in the earliest disclosure to which priority is claimed (i.e., the

Japanese applications) contravenes our rules and amounts to a procedural fault that justifies denying Patent Owner's motion to amend. Pet. Opp. 2; Pet. Sur-reply 2.

In reply, Patent Owner argues that it "relied upon previously filed exhibits and referenced them accurately." *See* PO Reply 2. Nevertheless, at the oral hearing, Patent Owner retreated to a fallback position: that its citations to the specification of the '400 patent are at least sufficient to show support as of the filing date of the U.S. patent application. *See* Tr. 21:22–22:8.

Patent Owner has provided citations to the issued '400 patent, and those citations appear to be supported by the U.S. application for the '400 patent provided in Exhibit 1003. Thus, we will assume for purposes of this Decision that Patent Owner's listing is sufficient proof that the specification of the '400 patent provides written description support at least as of the filing date of the U.S. application that led the '400 patent. For purposes of our analysis, we consider the effective filing date of Patent Owner's proposed substitute claims to be September 9, 2005. Ex. 1001, code (22).

b. Support for the "even if" Language in Limitations 3.10 and 4.10

The Intel IPR involves the same Patent Owner and the same proposed substitute claims. In the Final Written Decision for that case, we consider whether the "even if" language in limitations 3.10 and 4.10 is susceptible to an interpretation whereby a MIMO burst may be configured to suppress power consumption in *any* receiver, including a MIMO receiver. We also consider whether suppressing power in MIMO receivers is supported in

Patent Owner's U.S. application. Because the same considerations apply to the proposed substitute claims here, we analyze Patent Owner's support for limitations 3.10 and 4.10.

The specification of the U.S. application states:

> The present invention has been made in view of the foregoing circumstances and an object thereof is to provide a receiving method and apparatus by which to suppress the increase in power consumption *even if* a burst signal in a communication system which is not compatible with the receiving apparatus arrives, and to provide also a communication system utilizing said receiving method and apparatus.

Ex. 1003, 5 (emphasis added); *see also* Ex. 1001, 2:16–22 (corresponding sentence in the issued '400 patent). In this way, the U.S. application uses the same "even if" formulation as in limitations 3.10 and 4.10. Nevertheless, the U.S. application only discloses suppressing increases in power consumption in non-MIMO receivers. *See* Ex. 1003, 42–43, 52–53. Thus, the U.S. application does not support the use of MIMO burst signals to suppress power increases in MIMO receivers. Accordingly, we treat this as a limitation on the scope of the claims, as discussed below. *See infra* § III.C.

c. Support for the "first pilot signal" in a MIMO Data Field

In the Final Written Decision for the Intel IPR, we also consider whether the U.S. application discloses the claimed "first pilot signal" in a MIMO data field. Limitations 3.3 and 4.3 both recite "a <u>first</u> subcarrier carrying a first pilot signal included by frequency-division multiplexing in the first data in the first burst format." Mot. to Amend 11, 13. In turn, the "first burst format" is recited to be a MIMO burst in limitations 3.1 and 4.1.

Id.; *see also* Ex. 1002 ¶¶ 119–122 (Dr. Hansen describing MIMO burst signals). The invention described in the U.S. application allows a target (non-MIMO) receiver to distinguish between data or a MIMO control signal after the preamble at the beginning of a burst signal. Ex. 1003, 5–6, 10–12, 18–19, 21; *see also* Ex. 1002 ¶ 116 (Dr. Hansen discussing same). This allows a non-MIMO receiver to stop processing MIMO bursts and save power. Ex. 1002 ¶ 116; Ex. 1003, 6, 53; *see also* Mot. to Amend 12, 14 (limitations 3.10 and 4.10 both directed to suppressing an increase in power consumption at a receiver for an incompatible burst signal). In contrast, the U.S. application does not mention pilot signals in a MIMO *data* field, and the disclosed target device does not use them to detect whether a burst corresponds to a target system or a MIMO system. Ex. 1008, 53–56.

We have reviewed Patent Owner's asserted support in the specification for proposed substitute claims 3 and 4 (*see* Mot. to Amend 5–8), and no part of the specification (or its corresponding U.S. application) supports the use of a pilot signal in the *data* field of a MIMO burst for burst type detection. Thus, we determine the U.S. application lacks written description support for a pilot signal in the MIMO *data* field that a receiver can use to detect and stop processing a MIMO burst.

6. Conclusion Regarding Procedural Requirements

In view of the above, we determine that Patent Owner's motion to amend does not meet all of the statutory and regulatory requirements of 35 U.S.C. § 316(d) and 37 C.F.R. § 42.121. In particular, Patent Owner does not show written description support for the "first pilot signal" being in a MIMO data field. *See* 37 C.F.R. § 42.121(b). Nevertheless, for

completeness, we proceed to consider whether Petitioner has met its burden of persuasion with respect to patentability. *Lectrosonics*, Paper 15 at 3–4 ("[A]s a result of the current state of the law and USPTO rules and guidance, the burden of persuasion ordinarily will lie with the petitioner to show that any proposed substitute claims are unpatentable by a preponderance of the evidence."); *see also Aqua Products v. Matal*, 872 F.3d 1290 (Fed. Cir. 2017) (holding that, in the absence of a rule stating otherwise, the Board must assess the patentability of proposed substitute claims "without placing the burden of persuasion on the patent owner"); *Bosch Automotive Service Solutions, LLC v. Matal*, 878 F.3d 1027, 1040 (Fed. Cir. 2017) ("the petitioner bears the burden of proving that the proposed amended claims are unpatentable by a preponderance of the evidence").

C. Claim Construction

As discussed above, limitations 3.10 and 4.10 are susceptible to a reading whereby they cover suppressing power increases in MIMO receivers. *See supra* § III.B.5.b. Nevertheless, the U.S. application only discloses suppressing increases in power consumption in non-MIMO receivers. *See* Ex. 1003, 42–43, 52–53. Thus, for purposes of this Decision, we construe limitations 3.10 and 4.10 to only cover suppressing increases in power consumption in non-MIMO receivers. Such a construction is consistent with the extent to which limitations 3.10 and 4.10 are supported in the U.S. application.

D. Whether the Substitute Claims Comply with 35 U.S.C. § 112 ¶ 2

Petitioner contends the proposed substitute claims are indefinite insofar as there is no antecedent basis for the terms "MIMO pilot signals" and "target pilot signals" in the recitation "MIMO pilot signals have a same signal point constellation as target pilot signals" in limitations 3.6 and 4.6. Pet. Opp. 3–4. In particular, Petitioner contends "the claims provide no guidance to a[n ordinarily skilled artisan] as to the relationship between these terms and 'the first pilot signal' and 'the second pilot signal'" recited elsewhere in proposed substitute claims 3 and 4. *Id.* at 3. Petitioner further contends the lack of antecedent basis could lead to multiple interpretations. *See id.* at 3–4 (citing Ex. 1034 ¶ 100).

Given our disposition below regarding obviousness, we need not decide whether Patent Owner has complied with pre-AIA § 112 ¶ 2. Instead, for purposes of this Decision, we assume that Patent Owner has particularly pointed out and distinctly claimed the invention.

E. Patentability of Substitute Claims over Sun and 802.11a

Petitioner contends the subject matter of substitute claims 3 and 4 would have been obvious over the combination of U.S. Patent No. 7,616,698 B2 (Ex. 1033, "Sun") and 802.11a. Pet. Opp. 4–25; Pet. Sur-reply 3–5. Patent Owner disputes Petitioner's contentions. Mot. to Amend 9–10; PO Reply 3–5.

1. Sun

Sun is a U.S. patent describing a MIMO extension to 802.11a that uses multiple OFDM bins, i.e., subcarriers, to transmit information.

Ex. 1033, 9:19–27, 10:21–27, 14:32–36. Figure 7C of Sun is reproduced below.

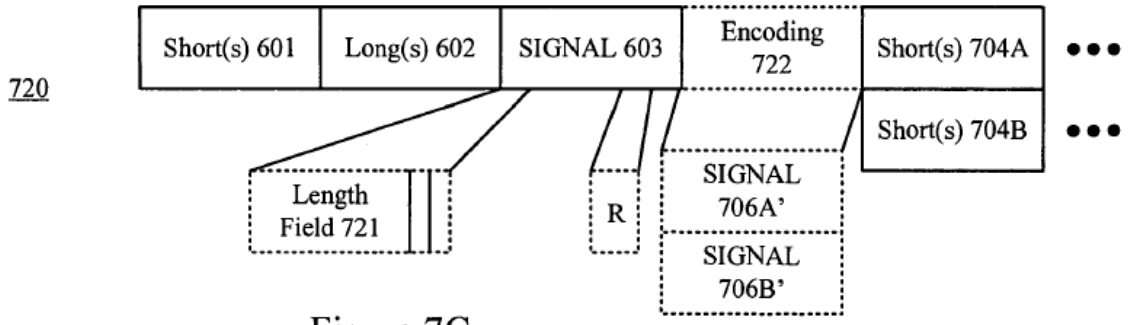

Figure 7C

Figure 7C depicts a MIMO burst format including, in order: a legacy non-MIMO training signal (including Short(s) 601 and Long(s) 602), a legacy non-MIMO control signal (Signal 603), a MIMO control signal (including encoding 722, Signal 706A', and Signal 706b'), and a MIMO training signal (including Short(s) 704A and Short(s) 704B). *Id.* at 9:46–59, 13:16–27, 14:6–19, 19:56–68, Fig. 7C. Sun further discloses that in a MIMO transmission, MIMO data follows the MIMO training signal. *Id.* at 2:61–63, 3:66–4:11.

Sun also discloses using pilot tones to "track[] and correct[] phase variations of multiple received data symbols for a MIMO signal. Ex. 1033, 3:66–4:1. Sun explains that

> a plurality of pilot bins can be inserted into each data symbol. In one embodiment, phase shifting can be added using a pattern across the plurality of pilot bins. For example, the pattern of the phase shifting can be rotated (e.g. cyclically) across the plurality of pilot bins. In one embodiment, four pilot bins can be inserted into each data symbol in a format of [1 1 1 -1]*p_l, wherein [1 1 1 -1] is a pattern across the four pilot bins and p_l is a pilot polarity for symbol l.

Id. at 4:1–8.

Sun additionally discloses embodiments that use the prior art transmitter depicted in Figure 3. *See, e.g.*, Ex. 1033, 25:12–29. Figure 3 of Sun is reproduced below.

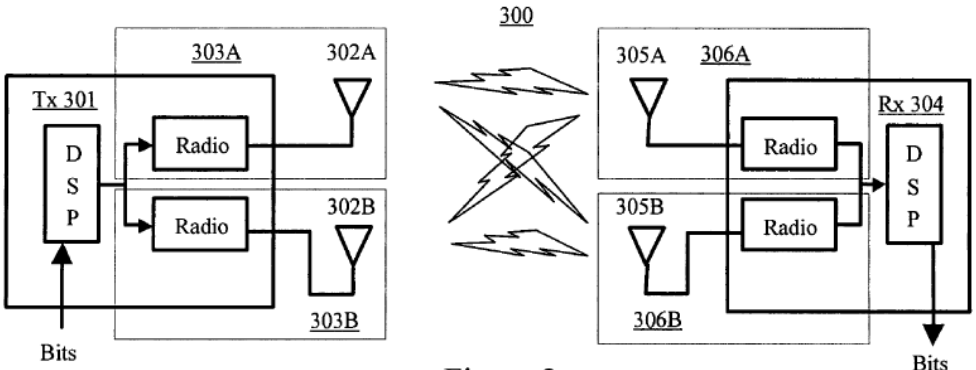

Figure 3

Figure 3 depicts a simplified MIMO system, including transmitter 301 and antennas 302A and 302B, "which can transmit on multiple antennas simultaneously and receive on multiple antennas simultaneously." Ex. 1033, 1:49–55.

Sun acknowledges the problem of beamforming that can occur when transmitting from multiple antennas. Ex. 1033, 12:59–63. Sun states that this problem can be addressed by applying phase shifts, which can be accomplished by using the well-known cyclic delay diversity (CDD) technique. *Id.* at 12:64–13:3.

Sun claims priority to two different provisional applications. *See* Ex. 1005, code (60). Petitioner contends Sun qualifies as prior art under 35 U.S.C. § 102(e) based on the April 19, 2004, filing date of the later provisional application. Pet. Opp. 7, 9–10; Ex. 1033, code (60). Also of importance to Sun's status as prior art, Petitioner makes certain arguments related to how CDD would have been known to an ordinarily skilled artisan as of the priority date of the proposed substitute claims. Pet. Opp. 4–7, 20–22. Petitioner notes that the issued version of Sun discloses CDD, but that

the later provisional application to which Sun claims priority does not explicitly disclose CDD. *Id.* at 22 (citing Ex. 1033, 12:67–13:3).

As discussed above (*see supra* § III.B.5.a), Patent Owner conceded at the oral hearing that its proposed substitute claims were only entitled to priority as of the date of the U.S. patent application, September 9, 2005. *See* Tr. 21:22–22:8. As a result, Patent Owner further conceded that Petitioner's evidence on CDD from the issued version of Sun was available as prior art. *See id.* at 22:9–17. In accordance with Patent Owner's concessions, we consider Sun's status as prior art from the U.S. filing date of Sun's non-provisional application, which is November 3, 2004. Ex. 1033, code (22). Thus, we determine that Sun qualifies as prior art under 35 U.S.C. § 102(e), because the November 3, 2004, filing date of Sun's non-provisional application is before the earliest possible effective filing date of the proposed substitute claims, which is September 9, 2005.[9] Ex. 1001, code (22); Ex. 1033, code (22).

2. Proposed Substitute Claim 3

The preamble of substitute claim 3 recites "[a] transmitting apparatus for transmitting an OFDM signal." Mot. to Amend 11. Petitioner cites Sun's disclosure of a MIMO system including transmitter 301. Pet. Opp. 11 (citing Ex. 1033, 1:49–55). Petitioner further cites Sun's teaching that

[9] Throughout Petitioner's obviousness analysis based on Sun and 802.11a, Petitioner includes citations both to the issued version of Sun and to the later provisional application to which Sun claims priority. Based on our determination that the issued version of Sun qualifies as prior art, we do not reproduce Petitioner's citations to the provisional application in this Decision.

"MIMO systems . . . allow legacy devices to decode the length of a MIMO packet and to restrain from transmitting during that period." *Id.* (citing Ex. 1033, 2:45–54). According to Petitioner, "[l]egacy devices are 802.11a/g devices," and an ordinarily skilled artisan would have known such devices used OFDM. *Id.* (citing Ex. 1033, 1:58–61, 2:47–51; Ex. 1034 ¶ 47). Patent Owner does not dispute Petitioner's contentions regarding the preamble. Thus, even if the preamble were considered limiting, the combination of Sun and 802.11a teaches the preamble of proposed substitute claim 3.

Limitation 3.1 recites "a generator operative to generate a burst signal having a first burst format where a first Non-MIMO training signal, a first Non-MIMO signal, a MIMO signal, a MIMO training signal, and first data are arranged in the stated order." Mot. to Amend 11. Petitioner cites 802.11a's PPDU encoding process as modified by Sun to account for multiple data streams. Pet. Opp. 12–13 (citing, *inter alia*, Ex. 1005, 7–8; Ex. 1033, 17:27–28, Ex. 1034 ¶¶ 50–52). For the claimed frame format, Petitioner cites Sun's burst format as illustrated in Petitioner's annotated version of Figure 7C, which is reproduced below.

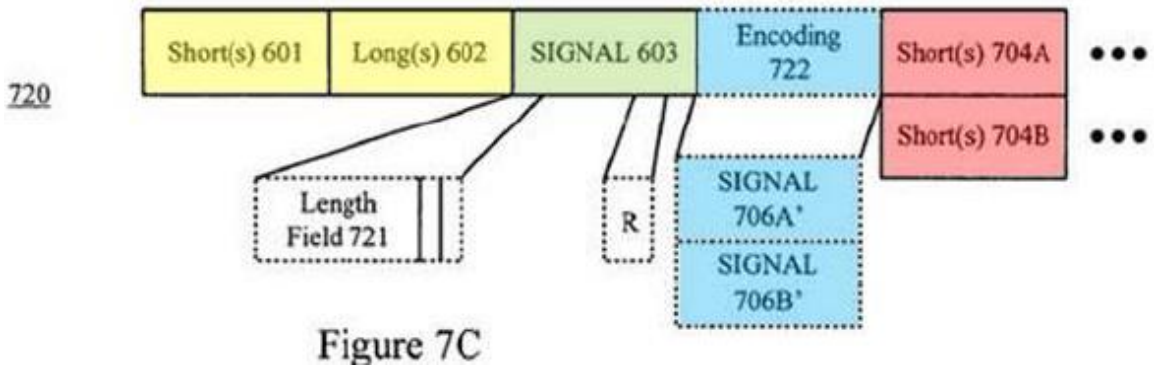

Figure 7C

Id. at 14. In this annotated version of Figure 7C, Petitioner depicts Sun's MIMO burst format and highlights legacy short and long training symbols

601 and 602 in yellow (i.e., the "first Non-MIMO training signal"); legacy SIGNAL symbol 603 in green (i.e., the "first Non-MIMO signal"); encoding symbol 722, which can include MIMO SIGNAL symbols 706A′ and 706B′, in blue (i.e., the "MIMO signal"); and short training symbols 704A and 704B in red (which along with long training symbols 705A and 705B (not shown) comprise "MIMO training signal[s]"). *Id.* at 13–15, 15 n.1 (citing, *inter alia*, Ex. 1033, 9:30–41, 9:49–67, 13:16–36, 14:6–11, 19:62–66; Ex. 1034 ¶¶ 53–54). Petitioner further contends that an ordinarily skilled artisan would have known that a data field followed the MIMO training signals. *Id.* at 15 (citing Ex. 1034 ¶ 55).

Patent Owner does not dispute Petitioner's analysis for limitation 3.1. We are persuaded by Petitioner's analysis, and we find the combination of Sun and 802.11a teaches limitation 3.1.

Limitation 3.2 recites "a transmitter operative to transmit the burst signal generated by the generator." Mot. to Amend 11. Petitioner cites Sun's transmitted 301 in Figure 3 for transmitting burst signals. Pet. Opp. 15–16 (citing 1:49–52, Fig. 3). Patent Owner does not dispute Petitioner's analysis for limitation 3.2. Based on Petitioner's showing, we find the combination of Sun and 802.11a teaches limitation 3.2.

Limitation 3.3 recites:

> wherein a <u>first</u> subcarrier carrying a first pilot signal included by frequency-division multiplexing in the first data in the first burst format of the burst signal generated by the generator is the same as a <u>second</u> subcarrier carrying a second pilot signal included by frequency-division multiplexing in second data in a second format.

Mot. to Amend 11. For the "second subcarrier," Petitioner cites 802.11a's teaching of "inserting pilot signals onto four OFDM subcarriers: -21, -7, 7,

and 21, which is frequency division multiplexing the pilot signals into the pilot signal subcarriers." Pet. Opp. 17 (citing Ex. 1005, 22; Ex. 1034 ¶ 60). For the "second pilot signal included by frequency-division multiplexing in second data in a second format," Petitioner cites the "legacy frame format with a PLCP preamble, a SIGNAL, and DATA" in 802.11a's Figure 107. *Id.* at 16 (citing Ex. 1005, Fig. 107); *see also* analysis for limitation 3.5, *infra*.

Regarding the "first subcarrier" being the same as the "second subcarrier," Petitioner states "Sun taught that legacy systems use four subcarriers (or bins) for transmitting pilot signals, and further taught that its system used these same four subcarriers as 802.11a to insert these pilot signals into MIMO OFDM symbols." *Id.* at 17 (citing Ex. 1033, 14:31–39; Ex. 1034 ¶ 60). For the "first pilot signal included by frequency-division multiplexing in the first data in the first burst format," Petitioner references its analysis from limitation 3.1 of Sun's modified version of the 802.11a PPDU encoding process, as discussed above. *Id.*

Patent Owner does not dispute Petitioner's analysis for limitation 3.3. We are persuaded by Petitioner's analysis, and we find the combination of Sun and 802.11a teaches limitation 3.3.

Limitation 3.4 recites "<u>wherein the first pilot signal is assigned to the first subcarrier which corresponds to the same frequency as the second subcarrier carrying the second pilot signal</u>." Mot. to Amend 12. Petitioner cites the common use of OFDM subcarriers -21, -7, 7, and 21 for carrying pilot signals of both legacy bursts (as taught by 802.11a) and MIMO bursts (as taught by Sun). Pet. Opp. 17 (citing Ex. 1005, 22; Ex. 1033, 14:31–39; Ex. 1034 ¶ 60). Patent Owner does not dispute Petitioner's analysis for

limitation 3.4. We are persuaded by Petitioner's analysis, and we find the combination of Sun and 802.11a teaches limitation 3.4.

Limitation 3.5 recites "wherein a second Non-MIMO training signal, a second Non-MIMO signal, and the second data are arranged in the stated order." Mot. to Amend 12. Petitioner cites 802.11a's legacy frame format and provides an annotated version of 802.11a's Figure 107, which is reproduced below.

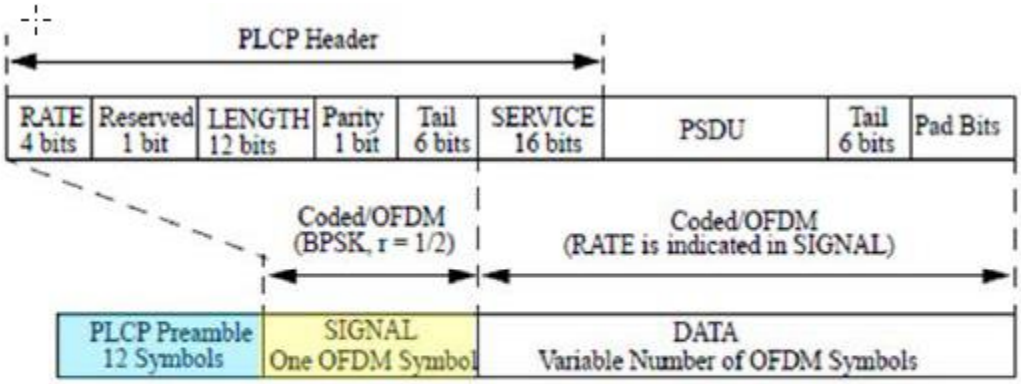

Figure 107—PPDU frame format

Pet. Opp. 16 (reproducing and annotating Ex. 1005, 7). Figure 107 depicts "a legacy frame format with a PLCP preamble, a SIGNAL, and DATA." *Id.* Petitioner contends "the PLCP preamble is a non-MIMO training signal, the SIGNAL is a non-MIMO signal, and the non-MIMO signal is followed by DATA." *Id.* at 16–17 (citing Pet. 34–35). Petitioner also cites Sun for teaching the transmission of these legacy packets. *Id.* (citing Ex. 1033, 13:10–15).

Patent Owner does not dispute Petitioner's analysis for limitation 3.5. We are persuaded by Petitioner's analysis, and we find the combination of Sun and 802.11a teaches limitation 3.5.

Limitation 3.6 recites "wherein a modulation scheme of the first pilot signal is the same as a modulation scheme of the second pilot signal and MIMO pilot signals have a same signal point constellation as target pilot signals." Mot. to Amend 12. Regarding the "second pilot signal," Petitioner contends 802.11a teaches "pilot signals that were modulated using Binary Phase Shift Keying (BPSK)," which "means that the signal point constellation for pilot signals . . . included the values +1 and -1." Pet. Opp. 17–18 (citing Pet. 35; Ex. 1005, 22; Ex. 1034 ¶ 61). According to Petitioner, Sun taught the use of the same pilot format and modulation scheme for MIMO OFDM symbols, so the "first pilot signal" likewise has signal point constellation of +1 and -1. *Id.* at 18 (citing Ex. 1033, 14:35–39; Ex. 1034 ¶ 62).

Patent Owner does not dispute Petitioner's analysis for limitation 3.6. We are persuaded by Petitioner's analysis, and we find the combination of Sun and 802.11a teaches limitation 3.6.

Limitation 3.7 recites "wherein the first pilot signal and the second pilot signal are both assigned to subcarrier numbers: -21, -7, 7 and 21." Mot. to Amend 12. Petitioner references the same analysis for limitation 3.4 establishing the common use of OFDM subcarriers -21, -7, 7, and 21 for legacy and MIMO transmissions. Pet. Opp. 18 (citing Ex. 1005, 22; Ex. 1033, 14:31–39; Ex. 1034 ¶ 64). Patent Owner does not dispute Petitioner's analysis for limitation 3.7. Based on Petitioner's showing, we find the combination of Sun and 802.11a teaches limitation 3.7.

Limitation 3.8 recites "wherein a pattern of the first pilot signal is different from a pattern of the second pilot signal." Mot. to Amend 12. Petitioner cites the analysis from 802.11a discussed above for the same

limitation in the WWiSE–802.11a ground. *See supra* § II.D.3. From that analysis, Petitioner sets forth the sequence of pilot signals for the first eight OFDM symbols in 802.11a in a table from page 19 of its Opposition, which is reproduced below.

OFDM Symbol									
	SIGNAL	Data							
Subcarrier	0	1	2	3	4	5	6	7	8
-21	1	1	1	1	-1	-1	-1	1	-1
-7	1	1	1	1	-1	-1	-1	1	-1
7	1	1	1	1	-1	-1	-1	1	-1
21	-1	-1	-1	-1	1	1	1	-1	1

Pet. Opp. 19 (citing Pet. 36; Ex. 1002 ¶ 271; Ex. 1034 ¶ 66). In this table, Petitioner summarizes the sequence of pilot signals for the first eight OFDM symbols in 802.11a, and Petitioner contends this was the pattern of the second pilot signal. *Id.*; Pet. 36.

Petitioner further cites Sun's "embodiment where the MIMO SIGNAL, encoding symbol 722, has flipped pilot tones (i.e. +/-) (with respect to regular symbols that would otherwise appear in that location)." Pet. Opp. 19 (citing Ex. 1033, 14:6–11; Ex. 1034 ¶ 67) (internal quotation omitted). According to Petitioner, this enables a receiver to detect whether an incoming packet is a MIMO packet or legacy packet based on the phase of the pilots in the encoding signal. *Id.* at 19–20 (citing Ex. 1033, 14:6–11; Ex. 1034 ¶ 67). Based on this teaching from Sun, Petitioner sets forth the sequence of pilot signals for a MIMO packet in a table from page 20 of its Opposition, which is reproduced below.

OFDM Symbol									
	MIMO SIGNAL 706	Short Training 704A	Long Training 705A	Long Training 705B	Data				
Subcarrier	0	1	2	3	4	5	6	7	8
-21	-1	-1	-1	-1	1	1	1	-1	1
-7	-1	-1	-1	-1	1	1	1	-1	1
7	-1	-1	-1	-1	1	1	1	-1	1
21	1	1	1	1	-1	-1	-1	1	-1

Pet. Opp. 20 (citing Ex. 1033, 14:6–11; Ex. 1034 ¶ 67). In this table, Petitioner summarizes the sequence of pilot signals in MIMO OFDM symbols, which are inverted versions of (and therefore different from) legacy 802.11a pilot signals. *Id.* (citing Ex. 1034 ¶ 68).

Patent Owner does not dispute Petitioner's analysis for limitation 3.8. We are persuaded by Petitioner's analysis, and we find the combination of Sun and 802.11a teaches limitation 3.8.

Limitation 3.9 recites "the transmitter transmits the burst signal from a plurality of antennas such that the signal transmitted from a given one antenna is shifted in timing with respect to the signal transmitted from another antenna in a cyclical manner." Mot. to Amend 12. Petitioner cites Sun's teachings of transmitting signals on multiple antennas to obtain transmit diversity benefits. Pet. Opp. 21 (citing Ex. 1033, 1:49–2:13, 9:39–42, 12:67–13:3; Ex. 1034 ¶ 71). Petitioner further cites Sun's teachings on applying CDD for creating phase shifts as a means of addressing the problem of beamforming. *Id.* (citing Ex. 1033, 12:59–13:3; Ex. 1034 ¶ 71). Patent Owner does not dispute Petitioner's analysis for limitation 3.9. We are persuaded by Petitioner's analysis, and we find the combination of Sun and 802.11a teaches limitation 3.9.

Limitation 3.10 recites "<u>wherein the transmitted burst signal is configured to suppress an increase in power consumption at a receiving</u>

apparatus even if the transmitted burst signal is not compatible with the receiving apparatus." Mot. to Amend 12. As discussed above, we construe this limitation to only cover suppressing increases in power consumption in non-MIMO receivers. *See supra* § III.C. In addition, the "transmitted burst signal" signal is a MIMO burst. *See* Limitation 3.1; *see also* Ex. 1034 ¶ 52.

According to Petitioner, "Sun taught that SIGNAL 603 included length information that, in the case of a MIMO packet, informed a legacy device of the length of time it should refrain from transmission." *Id.* at 23 (citing Ex. 1033, 9:49–52, 13:34–37; Ex. 1034 ¶ 76). Petitioner also cites Sun's teaching of legacy devices decoding the length of a MIMO packet and restraining from transmitting during that period. *Id.* at 22–23 (citing Ex. 1033, 2:51–54; Ex. 1034 ¶ 76). Petitioner contends an ordinarily skilled artisan would have "understood that informing a legacy device of the length of time it should refrain from transmission suppressed an increase in power consumption at the legacy device, namely suppressing an increase in power consumption associated with transmission." *Id.* (citing Ex. 1034 ¶ 77).

In reply, Patent Owner argues "[n]one of the Petitioner's arguments in the Opposition address the latter part of [limitation 3.10]: 'even if the transmitted burst signal is not compatible with the receiving apparatus.'" PO Reply 3. Patent Owner also argues "that a transmitted burst signal which may be configured to turn off the power consumption at a receiving apparatus is [not] the same as 'suppressing an increase in power consumption' as claimed." *Id.*

We do not agree with Patent Owner's arguments. The "transmitted burst signal" is a MIMO burst, which means that the non-compatible receiving apparatus is a non-MIMO receiver. *See* Pet. Sur-reply 3–4. This

is consistent with our construction of limitation 3.10 above. *See supra* § III.C. Petitioner's unpatentability contentions directly address the latter part of limitation 3.10 when discussing a non-MIMO receiver that receives a MIMO burst. *See* Pet. Opp. 22–23. In particular, Petitioner cites Sun's teaching of MIMO transmissions that include a legacy header with fields indicating the length of the MIMO packet. *Id.* (citing Ex. 1033, *inter alia*, 9:49–52, 13:34–37). Petitioner further cites Sun's teaching on legacy devices decoding the length of a MIMO packet from those fields and refraining from transmitting while a MIMO packet is being transmitted. *Id.* (citing, *inter alia*, Ex. 1033, 2:51–54; 13:34–37); Pet. Sur-reply 4 (citing same). In this way, Petitioner shows persuasively that Sun teaches the "not compatible" aspect in the latter part of limitation 3.10.

Regarding the "configured to suppress an increase in power consumption" aspect of limitation 3.10, Petitioner persuasively shows how Sun's legacy receiver refrains from transmitting for the while a MIMO burst is being transmitted. Pet. Opp. 22–23 (citing, *inter alia*, Ex. 1033, 2:51–54; 13:34–37); Pet. Sur-reply 3–4 (citing same). Dr. Hansen's unrebutted testimony establishes that the legacy device refraining from transmission for the duration of a MIMO packet is tantamount to suppressing an increase in power consumption. Ex. 1034 ¶ 77. Indeed, at the oral hearing, Patent Owner's counsel acknowledged that suppressing transmission could result in suppressing an increase in power consumption. Tr. 18:10–19:4. As such, we are persuaded by Petitioner's showing and find the combination of Sun and 802.11a teaches limitation 3.10.

Petitioner contends an ordinarily skilled artisan would have combined Sun with 802.11a because "Sun explicitly teaches a system that is

compatible with 802.11a." Pet. Opp. 10 (citing Ex. 1033, 1:21–27, 1:59–62, 2:45–55; Ex. 1034 ¶ 44). Petitioner notes that Sun teaches using 802.11a's preamble, header, pilot signal format, and modulation and coding schemes. *Id.* (citing Ex. 1033, 9:19–36, 14:38–41, 17:27–31; Ex. 1034 ¶ 44). Petitioner also cites Dr. Hansen's testimony that an ordinarily skilled artisan "would . . . have looked to combine Sun with 802.11a because Sun explicitly taught that it should be combined with 802.11a." *Id.* at 10–11 (citing Ex. 1034 ¶ 45). Patent Owner does not dispute Petitioner's reasons for combining Sun with 802.11a. Based on Petitioner's showing, we are persuaded that an ordinarily skilled artisan would have had reasons to combine Sun with 802.11a.

Having considered Petitioner's contentions and evidence and Patent Owner's arguments, we find that the combination of Sun and 802.11a teaches every limitation of proposed substitute claim 3. Petitioner also has provided persuasive reasons why an ordinarily skilled artisan would have made its proposed combination. Thus, we determine Petitioner has shown, by a preponderance of the evidence, that the subject matter of proposed substitute claim 3 would have been obvious over the combination of Sun and 802.11a.

3. Proposed Substitute Claim 4

Proposed substitute claim 4 is a method claim corresponding to proposed substitute claim 3. *Compare* Mot. to Amend 11–12, *with id.* at 13–14. Although proposed substitute claim 4 does not recite a generator or a transmitter, it recites corresponding generating and transmitting steps, as well as all other functions recited in proposed substitute claim 3. Petitioner

relies on the same obviousness contentions for proposed substitute claim 4 as for proposed substitute claim 3. *See* Pet. Opp. 23–25. Patent Owner relies on the same arguments discussed above. *See* PO Reply 4.

For the same reasons discussed above with respect to proposed substitute claim 3 (*see supra* § III.E.2), we find that the combination of Sun and 802.11a teaches every limitation of proposed substitute claim 4. Petitioner also has provided persuasive reasons why an ordinarily skilled artisan would have made its proposed combination. Thus, we determine Petitioner has shown, by a preponderance of the evidence, that the subject matter of proposed substitute claim 4 would have been obvious over the combination of Sun and 802.11a.

IV. CONCLUSION

Petitioner has shown, by a preponderance of the evidence, that claims 1 and 2 would have been obvious over (1) the combination of WWiSE and 802.11a and (2) the combination of TGn-Sync and 802.11a. Petitioner has not shown, by a preponderance of the evidence, that claims 1 and 2 would have been obvious over the combination of Narasimhan and van Zelst.

Regarding Patent Owner's motion to amend, Patent Owner has not shown written description support for the "first pilot signal" of proposed substitute claims 3 and 4 being in a MIMO data field. *See* 37 C.F.R. § 42.121(b). In addition, Petitioner has shown, by a preponderance of the evidence, that the subject matter of proposed substitute claims 3 and 4 would have been obvious over the combination of Sun and 802.11a. Thus, we *deny* Patent Owner's motion to amend.

ORDER

Accordingly, it is:

ORDERED that claims 1 and 2 of the ’400 patent are held to be unpatentable;[10]

FURTHER ORDERED that Patent Owner’s motion to amend is *denied*; and

FURTHER ORDERED that, because this is a Final Written Decision, parties to this proceeding seeking judicial review of our decision must comply with the notice and service requirements of 37 C.F.R. § 90.2.

In summary:

Claims	**35 U.S.C. §**	**References/Basis**	**Claims Shown Unpatentable**	**Claims Not shown Unpatentable**
1, 2	103(a)	WWiSE, 802.11a	1, 2	
1, 2	103(a)	TGn-Sync, 802.11a	1, 2	
1, 2	103(a)	Narasimhan, van Zelst		1, 2
Overall Outcome			1, 2	

[10] Should Patent Owner wish to pursue amendment of the challenged claims in a reissue or reexamination proceeding subsequent to the issuance of this Decision, we draw Patent Owner’s attention to the April 2019 *Notice Regarding Options for Amendments by Patent Owner Through Reissue or Reexamination During a Pending AIA Trial Proceeding*. *See* 84 Fed. Reg. 16,654 (Apr. 22, 2019). If Patent Owner chooses to file a reissue application or a request for reexamination of the challenged patent, we remind Patent Owner of its continuing obligation to notify the Board of any such related matters in updated mandatory notices. *See* 37 C.F.R. § 42.8(a)(3), (b)(2).

Motion to Amend Outcome	Claims
Original Claims Cancelled by Amendment	
Substitute Claims Proposed in the Amendment	3, 4
Substitute Claims: Motion to Amend Granted	
Substitute Claims: Motion to Amend Denied	3, 4
Substitute Claims: Not Reached	

PETITIONER:

Christopher J. Tyson
Matthew Yungwirth
DUANE MORRIS LLP
cjtyson@duanemorris.com
msyungwirth@duanemorris.com

Bryan P. Clark
THE WEBB LAW FIRM
bclark@webblaw.com

Carol Ansley
ARRIS
carol.ansley@commscope.com

PATENT OWNER:

Patrick R. Delaney
Timothy Devlin
Leonard Monfredo
Srikant Cheruvu
DEVLIN LAW FIRM LLC
pdelaney@devlinlawfirm.com
td-ptab@devlinlawfirm.com
lmonfredo@devlinlawfirm.com
scheruvu@devlinlawfirm.com

kis