Trials@uspto.gov
Tel: 571-272-7822

Paper 102
Date: November 23, 2022

UNITED STATES PATENT AND TRADEMARK OFFICE

BEFORE THE PATENT TRIAL AND APPEAL BOARD

C.R. BARD, INC.,
Petitioner,

v.

MEDLINE INDUSTRIES, LP,[1]
Patent Owner.

IPR2019-00036
Patent 9,745,088 B2

Before JOSIAH C. COCKS, MITCHELL G. WEATHERLY, and ALYSSA A. FINAMORE, *Administrative Patent Judges.*

WEATHERLY, *Administrative Patent Judge*.

JUDGMENT
Final Written Decision on Remand
Determining All Challenged Claims Unpatentable
35 U.S.C. §§ 144, 318

---

[1] Patent Owner was previously identified as Medline Industries, Inc., but it states that it changed its legal form from a corporation to a limited partnership on September 7, 2021. Paper 80, 2. As of the same date, Medline Industries, LP was also the record owner of the '088 patent. Ex. 3004.

I. INTRODUCTION

A. TRIAL BACKGROUND

C.R. Bard, Inc. ("Petitioner") filed a petition (Paper 2, "Pet.") to institute an *inter partes* review of claims 45–58, 60–74, 76–90, and 92 (the "challenged claims") of U.S. Patent No. 9,745,088 B2 (Ex. 1001, "the '088 patent"). 35 U.S.C. § 311. Medline Industries, LP ("Patent Owner") timely filed a Preliminary Response. Paper 11 ("Prelim. Resp."). Based on our review of the record at that preliminary stage, we concluded that Petitioner was reasonably likely to prevail with respect to at least one of the challenged claims, and we therefore instituted *inter partes* review of all challenged claims on all the grounds set forth in the Petition. *See* Paper 18, 27–28.

Petitioner contends that the challenged claims are unpatentable under 35 U.S.C. § 103 based on the following grounds (Pet. 25–82):

Claims challenged	35 U.S.C. §	References
45–48, 50, 51, 55–58, 60–64, 66, 67, 71–74, 76–80, 82, 83, 87–90, 92	103	Solazzo,[2] Serany[3], Disston[4]
49, 54, 65, 70, 81, 86	103	Solazzo, Serany, Disston, Salvadori[5]

[2] U.S. Patent No. 7,278,987 B2 (Ex. 1005, "Solazzo").

[3] U.S. Patent No. 3,329,261 (Ex. 1006, "Serany").

[4] U.S. Patent No. 3,166,189 (Ex. 1008, "Disston").

[5] U.S. Patent No. 5,931,303 (Ex. 1009, "Salvadori").

Claims challenged	35 U.S.C. §	References
52, 53, 68, 69, 84, 85	103	Solazzo, Serany, Disston, Franks-Farah[6]
55, 71, 87	103	Solazzo, Serany, Disston, Bierman[7]

After we instituted this review, Patent Owner filed a Patent Owner Response in opposition to the Petition. Paper 36 ("PO Resp."). Petitioner filed a Reply in support of the Petition. Paper 55 ("Reply"). Patent Owner filed a Sur-reply. Paper 64 ("Sur-reply"). With our authorization, each party filed a brief addressing a recent decision from our reviewing court, *Fox Factory, Inc. v. SRAM, LLC*, 944 F.3d 1366 (Fed. Cir. 2019). Papers 69, 70. Patent Owner did not move to amend any claim of the '088 patent.

We heard oral argument on January 6, 2020, a transcript of which appears in the record (Paper 71, "Tr.").

We entered a Final Written Decision ("Decision" or "Dec.") in which we concluded that Petitioner had failed to demonstrate by a preponderance of evidence that claims 45–58, 60–74, 76–90, and 92 were unpatentable. Paper 73, 5–20. Our Decision was based solely upon our determinations that Petitioner had failed to demonstrate that the prior art described or suggested all limitations of each independent claim. *Id*. at 12–19. We did not separately address the patentability of any dependent claim, *id*. at 18, or weigh the objective evidence of nonobviousness adduced by the parties, *id*. at 19.

---

[6] U.S. Patent No. 6,840,379 B2 (Ex. 1007, "Franks-Farah").

[7] U.S. Patent Publication No. 2008/0249476 A1 (Ex. 1020, "Bierman").

B. THE APPEAL TO THE FEDERAL CIRCUIT

Petitioner appealed our Decision to the Federal Circuit. *C.R. Bard, Inc. v. Medline Indus., Inc.*, No. 2020-1900, 2021 WL 3574043 (Fed. Cir. Aug. 13, 2021) ("Op."). Briefly, the Federal Circuit disagreed with our determinations that the prior art did not teach all limitations of independent claims 45, 61, and 77.[8] *Id.* at *4–5. More specifically, the Federal Circuit vacated our Decision that claims 45–58, 60–74, 76–90, and 92 of the '088 patent were not unpatentable. *Id.* at *5. Therefore, the Federal Circuit remanded the case to us for further proceedings consistent with its opinion. *Id.* at *10.

On remand, we must (1) determine whether and to what extent, if any, Patent Owner's actions in IPR2019-00208,[9] collaterally estop Patent Owner from arguing that objective evidence of nonobviousness warrants a conclusion that its claims remain patentable; and (2) reconsider the patentability of the challenged claims, including dependent claims not separately analyzed in the Decision, in view of the objective evidence of nonobviousness adduced by the parties. *Id.* at *9–10. We did not separately address any dependent claims in our Decision. Accordingly, we must now reconsider whether Petitioner has proven that dependent claims 46–58, 60, 62–74, 76, 78–90, and 92 are unpatentable.

---

[8] Although the Federal Circuit did not separately and expressly analyze independent claims 61 and 77, it did instruct us to include those claims and their respective dependent claims in our analysis on remand. Op. *10.

[9] IPR2019-00208 involves U.S. Patent No. 9,808,400 B2, which is owned by Patent Owner, "share[s] similar disclosures with" the '088 patent, and has "similar" claims to the claims challenged in this proceeding. IPR2019-00208, Paper 3, 3. The final written decision in IPR2019-00208 was not appealed.

C. REMAND BACKGROUND

On remand, we authorized the parties to concurrently file an opening brief on the merits and concurrently file a responsive reply brief. Paper 82, 4–5. Neither party asked nor did we allow either party to submit new evidence during the remand proceeding. *Id*. at 3. Accordingly, we decide the issues on remand based on the record that was submitted during the original trial.

Petitioner filed an opening brief (Paper 85, "Pet. Remand Br."). Patent Owner filed an opening brief (Paper 87, "PO Remand Br."). Petitioner filed a Reply responding to Patent Owner's opening brief (Paper 93, "Pet. Remand Reply"). Patent Owner filed a Reply responding to the Remand Reply (Paper 90, "PO Remand Reply"). With our authorization (Paper 94, 2–3), each party filed a supplemental brief addressing their respective arguments relating to the interpretation of "a surface defining a single layer tray having a first compartment separated by a barrier from a second compartment," which is recited in independent claim 61. Papers 96, 97 (the "Barrier Briefs").

Patent Owner, but not Petitioner, requested an oral hearing, and we denied Patent Owner's request. Paper 94. This Final Written Decision is issued pursuant to 35 U.S.C. §§ 144, 318(a) and 37 C.F.R. § 42.73. For the reasons expressed below, we conclude that Petitioner has demonstrated by a preponderance of evidence that all challenged claims are unpatentable as obvious.

D. RELATED PROCEEDINGS

The parties identified as a related proceeding the co-pending district court proceeding of *Medline Industries, Inc. v. C. R. Bard, Inc.*, Case

Number 1:17-cv-07216 (N.D. Ill.). Pet. 82; Paper 4, 2. The parties also identify IPR2019-00035, in which Petitioner challenges claims 1, 2, 6–10, 16–19, and 25–44 of the ’088 patent, as a related matter. *Id.* Patent Owner further identifies as related matters U.S. Patent Application Nos. 15/684,787 and 15/803,383, which are continuations of the application leading to issuance of the ’088 patent. Paper 4, 2. Patent Owner further identifies U.S. Patent Application Nos. 14/265,920; 15/804,520; 15/051,964; 13/374,509; 15/640,224; and 15/703,514 as related matters because these applications “share similar disclosures and claim language” with the ’088 patent. *Id*. Patent Owner further identifies U.S. Patent Application Nos. 16/833,575; 16/944,667; and 17/180,680 as “continuation applications” claiming priority to the ’088 patent and U.S. Patent Application Nos. 16/986,803; 16/258,231; 16/688,185; 16/721,718; 17/372,149; 17/483,608; 17/483,610; and 63/247,733 as related matters because these applications “share similar disclosures and in at least some instances similar claim language” with the ’088 patent. Paper 80, 2–3.

E. THE ’088 PATENT

The ’088 patent is directed to “storage containers for medical devices, and more particularly to a storage container for a long, flexible medical implement, such as a catheter, and related medical devices.” Ex. 1001, 1:34–37. The Specification describes tray 100 shown in Petitioner’s annotated and colorized version of Figure 7 (Pet. 14), which we reproduce below.

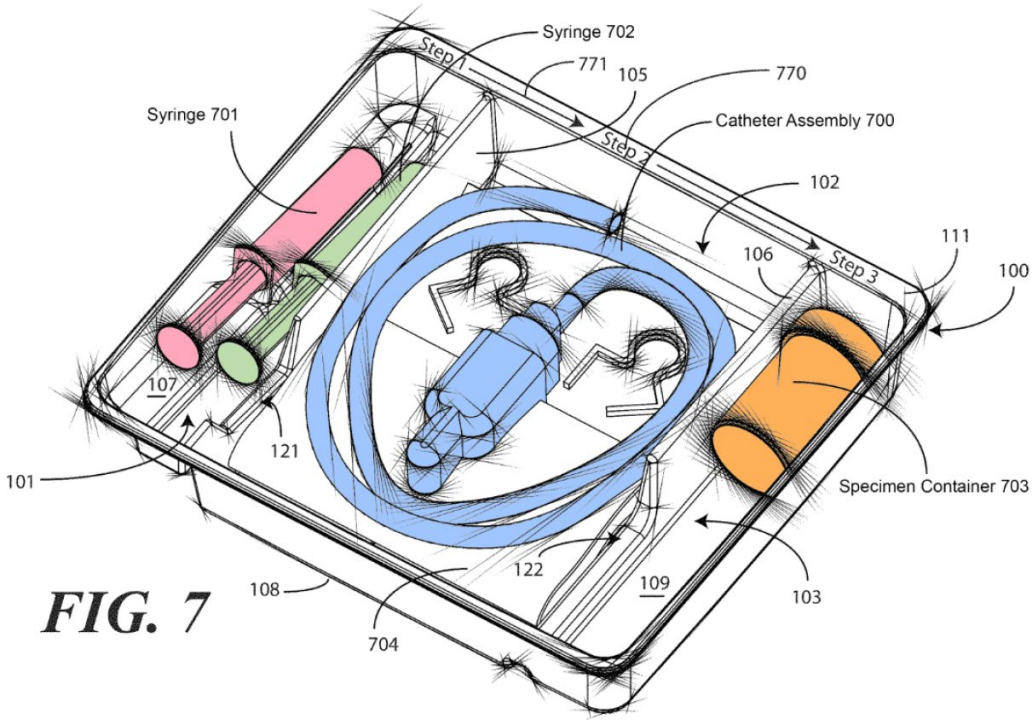

FIG. 7

Figure 7 illustrates a catheter, two syringes, and a specimen bottle located within single level tray 100. Ex. 1001, 2:45–49.

Before use, tray 100 is double-wrapped to ensure that components in the tray remain sterile up to and through their initial use with tray 100 being wrapped in CSR wrap 1000 and then outer sterile wrap 1002. *Id*. at 11:45–46, 11:51–52, Fig. 10. Tray 100 includes three compartments 101, 102, 103 adapted to receive various items used in a catheterization procedure. *Id*. at 5:12–18. First compartment 101 accommodates syringes 701, 702 (red, green) containing sterile water or lubricants. *Id*. at 4:18–21, 9:24–26. Second compartment 102 accommodates catheter assembly 700 (blue) and towel 704. *Id*. at 9:26–28. Third compartment 103 accommodates specimen container 703 (orange) for capturing samples taken from the patient via catheter 700. *Id*. at 4:22–23, 5:64–65. Additional objects can be included with the tray, including one or more towels, a drape

to cover the patient, rubber gloves, hand sanitizing materials, swab sticks, a securement device, printed instructions, and so forth. *Id*. at 5:46–51.

Claims 45, 61, and 77 are the independent claims among the challenged claims. *Id*. at 30:58–33:22. The text of each independent claim is reproduced below in Parts VI–VIII below respectively.

II. CLAIM INTERPRETATION

"A claim in an unexpired patent that will not expire before a final written decision is issued shall be given its broadest reasonable construction in light of the specification of the patent in which it appears." 37 C.F.R. § 42.100(b) (2018);[10] *see also Cuozzo Speed Techs., LLC v. Lee*, 136 S. Ct. 2131, 2144–46 (2016) (affirming that USPTO has statutory authority to construe claims according to Rule 42.100(b)). When applying that standard, we interpret the claim language as it would be understood by one of ordinary skill in the art in light of the specification. *In re Suitco Surface, Inc.*, 603 F.3d 1255, 1260 (Fed. Cir. 2010). Thus, we give claim terms their ordinary and customary meaning. *See In re Translogic Tech., Inc.*, 504 F.3d 1249, 1257 (Fed. Cir. 2007) ("The ordinary and customary meaning 'is the meaning that the term would have to a person of ordinary skill in the art in question.'"). Only terms that are in controversy need to be construed, and

[10] In 2018, this Rule was amended to require that we interpret claims in the same manner used in a civil action under 35 U.S.C. § 282(b). However, the amended Rule does not apply in this proceeding because the Petition was filed before the effective date of the new Rule, November 13, 2018. *See* Changes to the Claim Construction Standard for Interpreting Claims in Trial Proceedings Before the Patent Trial and Appeal Board, 83 Fed. Reg. 51,340, 51,344 (Oct. 11, 2018).

then only to the extent necessary to resolve the controversy. *Vivid Techs., Inc. v. Am. Sci. & Eng'g, Inc.*, 200 F.3d 795, 803 (Fed. Cir. 1999).

In our Decision, we did not express an opinion about the meaning of any specific claim language because we determined that the controversy between the parties does not require it. Dec. 6. During the trial and continuing on remand, however, the parties have contested the meaning of "a surface defining a single layer tray having a first compartment separated by a barrier from a second compartment," which is a portion of limitation 61a. PO Resp. 37–39; Reply 11–13; Sur-reply 6–7; PO Remand Br. 3–9; Pet. Remand Reply 4–12; PO Remand Reply. 1–3. We address the meaning of this phrase in Part VII.A.1 below where we also compare the prior art to limitation 61a. We consider all other language in the claims according to the principles set forth above.

III. LEGAL STANDARDS

To prevail in its challenges to the patentability of the claims, Petitioner must establish facts supporting its challenges by a preponderance of the evidence. 35 U.S.C. § 316(e); 37 C.F.R. § 42.1(d). "In an [*inter partes* review], the petitioner has the burden from the onset to show with particularity why the patent it challenges is unpatentable." *Harmonic Inc. v. Avid Tech., Inc.*, 815 F.3d 1356, 1363 (Fed. Cir. 2016) (citing 35 U.S.C. § 312(a)(3) (requiring *inter partes* review petitions to identify "with particularity . . . the evidence that supports the grounds for the challenge to each claim")). This burden never shifts to Patent Owner. *See Dynamic Drinkware, LLC v. Nat'l Graphics, Inc.*, 800 F.3d 1375, 1378 (Fed. Cir. 2015) (citing *Tech. Licensing Corp. v. Videotek, Inc.*, 545 F.3d 1316,

1326–27 (Fed. Cir. 2008)) (discussing the burden of proof in *inter partes* review).

The Supreme Court in *KSR International Co. v. Teleflex Inc.*, 550 U.S. 398 (2007), reaffirmed the framework for determining obviousness as set forth in *Graham v. John Deere Co.*, 383 U.S. 1 (1966). The *KSR* Court summarized the four factual inquiries set forth in *Graham* that we apply in determining whether a claim is unpatentable as obvious under 35 U.S.C. § 103(a) as follows: (1) determining the scope and content of the prior art, (2) ascertaining the differences between the prior art and the claims at issue, (3) resolving the level of ordinary skill in the pertinent art, and (4) considering objective evidence indicating obviousness or nonobviousness. *KSR*, 550 U.S. at 406 (citing *Graham*, 383 U.S. at 17–18). In an *inter partes* review, Petitioner cannot satisfy its burden of proving obviousness by employing "mere conclusory statements." *In re Magnum Oil Tools Int'l, Ltd.*, 829 F.3d 1364, 1380 (Fed. Cir. 2016). Thus, to prevail Petitioner must explain how the proposed combinations of prior art would have rendered the challenged claims unpatentable. With these standards in mind, we address each challenge below.

IV. LEVEL OF ORDINARY SKILL IN THE ART

The parties generally agree that a person having an ordinary level of skill in the relevant art would have a bachelor's degree in packaging engineering, mechanical engineering, or industrial design. Pet. 18 (citing Ex. 1002 ¶¶ 14–16); PO Resp. 15 (citing Ex. 2026 ¶ 38). Alternatively, such a person could have an engineering degree in another technical field along with about two years of experience designing medical packaging. Pet. 18 (citing Ex. 1002 ¶¶ 14–16); PO Resp. 15 (citing Ex. 2026 ¶ 38). Neither

party contends that a person of ordinary skill needs to be a medical practitioner, but both parties agree that the person of ordinary skill would consult with medical practitioners familiar with catheterization procedures. Pet. 18; PO Resp. 15 (citing Ex. 2027 ¶ 78).

Slight differences exist in the formulation of the level of ordinary skill between the parties. We, however, discern no meaningful difference because none of those differences would affect the outcome of our analysis. Accordingly, we apply the level of skill set forth in the preceding paragraph.

V. OVERVIEW OF PERTINENT PRIOR ART

A. SOLAZZO

Solazzo is directed to an ergonomic, single layer catheterization/irrigation tray 1 having multiple compartments, including recessed area 3, compartment 27, and wells 31, 33 as shown in Figure 1, which we reproduce below right. Ex. 1005, 4:15–25, Fig.1. Solazzo's Figure 1 is a perspective view of the catheterization and irrigation tray illustrating its major features. *Id*. at 3:31–33. Divider wall 17 is optional and, when present, divides recessed area 3 into two compartments, with compartment 27 being configured to receive fluid passing over top 25 of wall 17. *Id*. at 4:15–20.

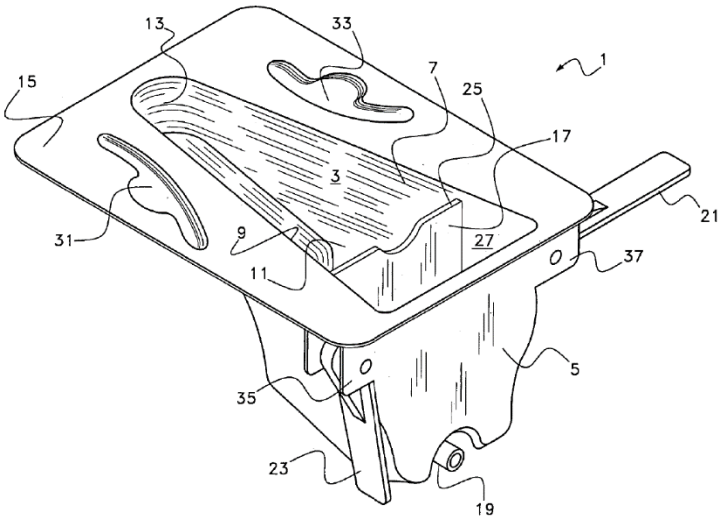

Fig. 1

Recessed area 3 is trapezoidal-shaped with a "non constant depth" provided by terraced bottom 11 having low area 11A and shallow area 11B as shown in Figure 2, reproduced at right. *Id.* at 3:61–66, Fig. 2. Recessed area 3 and compartment 27 store medical devices of tray kit 100, including Foley catheter 120, urinary tract lubricant 140, surgical gloves 130, inflation syringe 110, irrigation syringe (not shown), evacuation tubing, and antiseptic solutions as shown in Solazzo's Figure 8, which is a top view of kit 100 that we reproduce below. *Id.* at 3:14–24, 4:1–8, Fig. 8.

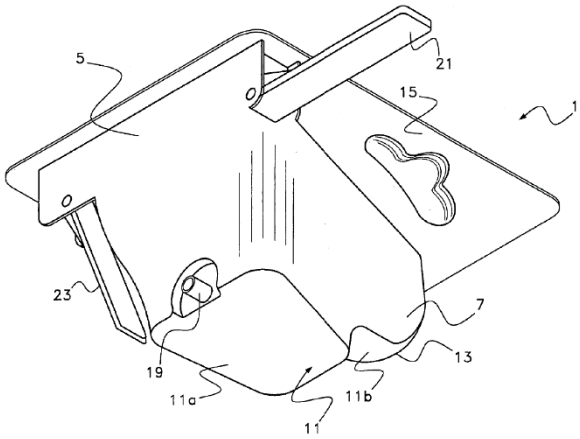

Fig. 2

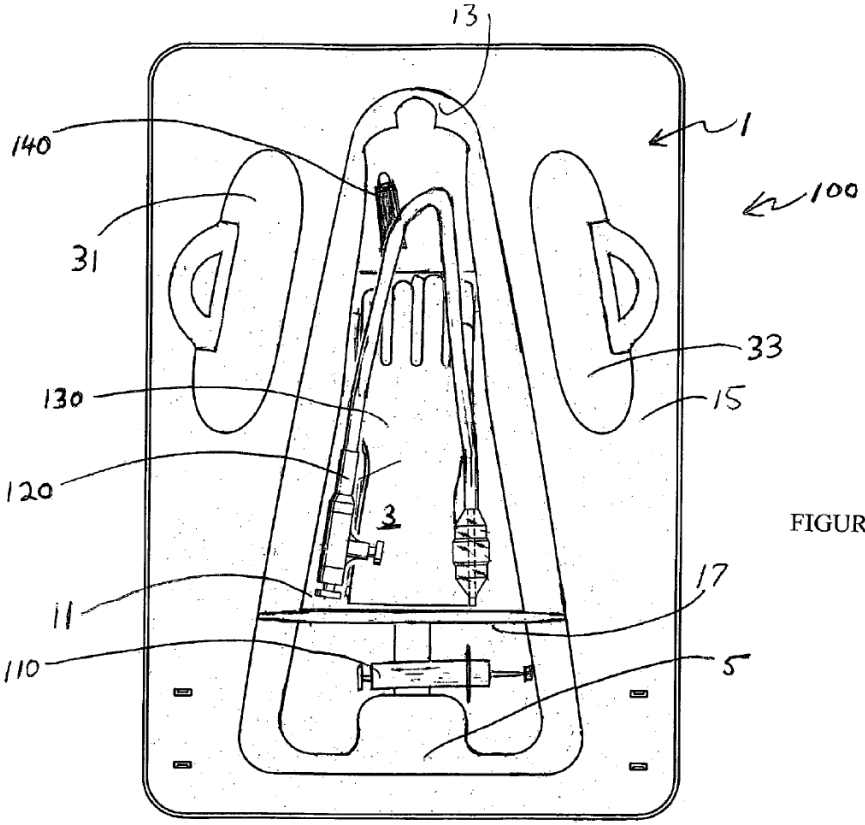

FIGURE 8

Solazzo's Figure 8 is a top view of kit 100 illustrating various components stored in compartments of tray 1. *Id.* at 4:41–48.

Inflation syringe 110 is stored at low area 11A, and lubricant 140 is stored at shallow area 11B. *Id*. at 4:41–45, Fig. 8.

In use, recessed area 3 and compartment 27 fit between the legs of a "patient requiring an urological procedure" while flange 15 and wing supports 21, 23 rest atop the legs while the patient is seated. *Id*. at 1:8–12, 3:66–4:10, 4:26, 4:32–33, Fig.1. A surgeon proceeds to "evacuate the bladder of its contents, urine and/or clots" using kit 100, e.g., by wearing the gloves, lubricating and inserting the catheter, and inflating it with inflation syringe 110. *Id*. at 4:32–33, 4:46–48.

B. SERANY

Serany is directed to a double-wrapped, sterile package providing catheterization components ready for use in the order needed. Ex. 1006, 1:8–16, 1:60–63, 3:63–4:2; Figs. 1–3, 5. Serany's Figure 5 (reproduced at right in pertinent part) is an exploded view illustrating how various compartments are positioned within Serany's box 10. The package includes multi-compartment single layer tray 12 mounted on box 10 and enclosed with

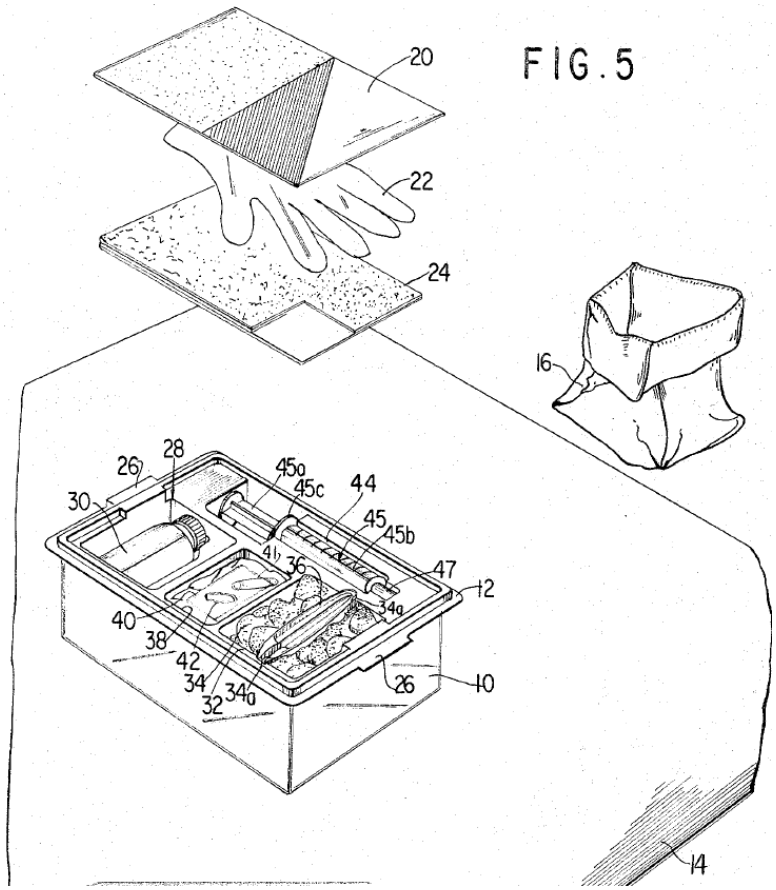

sealed outer envelope 16 and inner wrap 14 that unfolds to provide a sterile field work area. *Id*. at 1:60–72, 2:17–20; Figs. 1–5.

For example, prefilled syringe 45 of sterile water fits in depression 44, which includes indentations 44d along the sides to accommodate the syringe's flange. *Id*. at 2:40–41, 3:6–22; Figs. 6–7. Serany's package further includes waterproof underpad 20, gloves 22, fenestrated drape 24, cleansing solution bottle 30, rayon balls 34, forceps 36, lubricating jelly pouch 40, safety pin 41, and rubber band 42. Serany describes its package as containing "all the essential equipment, . . . for a complete catheterization procedure. . . . Everything is available in the proper order of use and in a sterile condition." *Id*. at 1:16–25.

Box 10 also includes Foley catheter 48 that is preconnected to collapsible drainage bottle 46 via tube 49 and "ready for use" as shown in Serany's Figure 6, which is reproduced at right. *Id*. at 2:22–33, 2:57–70, 3:1–5, 3:23–26, Figs. 5–6. Collapsible drainage "bottle 46 is made of flexible plastic material having fold lines 46a . . . so that it may be folded flat for storage . . . and expanded into cube form when in use. The bottle is shown in FIG. 6 partially expanded for illustration purposes." *Id*. at 3:26–31, Fig. 6. Catheter 48 and tubing 49 are coiled in the box about bottle 46 as shown in Figure 6. *Id*. at 3:33–35.

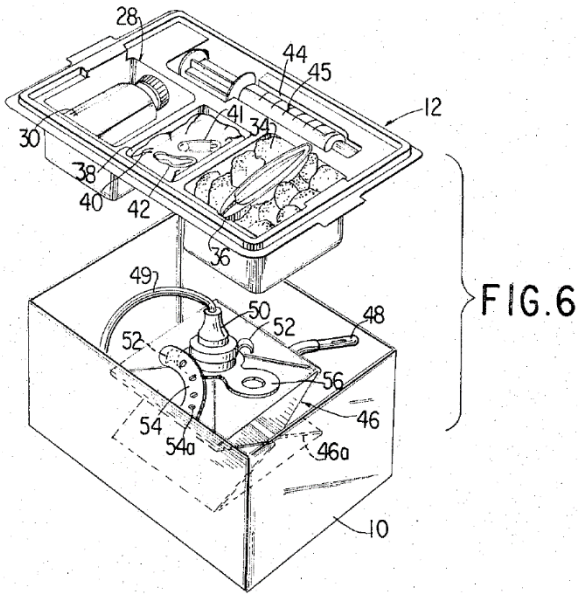

C. DISSTON

Disston is directed to a double-wrapped catheterization tray package that "provide[s] for the first time a complete, properly organized, conveniently arranged, sterile set of equipment for catheterization, the entire drainage system being pre-assembled." Ex. 1008, 1:59–67, 2:60–63, Figs. 2–3. Single-level tray 2 contains catheterization devices "arranged in such order and position as to be most conveniently available when the container is opened." *Id*. at 2:15–23. The tray is slidably received in open-ended sleeve 1 having flap 3 folded downwardly over an edge of the tray, and further wrapped in a plastic outer envelope. *Id*. at 1:59–67, 2:23–26, Figs. 2–3.

When opened, the tray presents contents including gloves, cleansing solution, protective pad or sheet, lubricant, sterile water packet, syringe, "and most importantly, a pre-assembled catheter-drainage tube-drip chamber-drainage bag and hanger, assembly, sterile and ready for use immediately." *Id*. at 1:26–35, 2:41–52, Fig. 1. This assembly "not only saves time and trouble but practically eliminates the danger of faulty connections and loss of sterility, inherent in the former system." *Id*. at 1:42–46.

VI. CLAIMS 45–58 AND 60

A. INDEPENDENT CLAIM 45

Independent claim 45 recites:

45. A medical procedure kit, comprising:

[a] a single layer tray having a first compartment for receiving syringes and a second compartment for receiving a medical assembly;

> [b] a first syringe and a second syringe disposed within the first compartment;
>
> [c] the medical assembly disposed in the second compartment, wherein the medical assembly comprises a coiled tubing coupled between a fluid drain bag and a Foley catheter;
>
> [d] at least one layer of wrap material enclosing the single layer tray within one or more folds of the at least one layer of wrap material; and
>
> [e] an outer packaging disposed about both the single layer tray and the at least one layer of wrap material.

Ex. 1001, 30:58–31:5 (with added letter designations a–e to ease discussion).

Previously, we concluded that Petitioner had failed to prove by a preponderance of evidence that the combination of Solazzo, Serany, and Disston described elements 45b and 45c and thus failed to establish that claim 45 was obvious. Dec. 12–16.

The Federal Circuit found that: "Although the prior art does not 'expressly' direct a skilled artisan to place two syringes in one compartment, it certainly was well within the possibilities available to him to do so." Op. *4. On this basis, the Federal Circuit found that we erred in our "determination that the prior art did not teach the claim limitation of storing two syringes in one compartment." *Id*. at *5. Thus, the Federal Circuit has found in Petitioner's favor that the combined teachings of Solazzo, Serany, and Disston suggest limitation 45b. *Id*. The Federal Circuit vacated our conclusion that claim 45 remained patentable and remanded for further proceedings consistent with its opinion. *Id*. at *10. On remand, we must (1) address whether the combination of Solazzo and Serany describes or suggests all other elements of claim 45 and (2) consider and weigh Patent Owner's objective evidence of nonobviousness.

1. Limitation 45a

Limitation 45a refers to the following text from claim 45: "a single layer tray having a first compartment for receiving syringes and a second compartment for receiving a medical assembly." Ex. 1001, 30:59–61. Petitioner identifies Solazzo's compartment 27 as the first compartment for receiving syringes (e.g., inflation syringe 110) and compartment 3 as the second compartment for receiving a medical assembly (e.g., catheter 120). Pet. 36–38 (citing Ex. 1005, 2:61–63, Figs. 1, 5, 8, 10; Ex. 1002 ¶¶ 366–371).

Patent Owner proffers no argument to counter Petitioner's showing that Solazzo describes limitation 45a, which merely recites two compartments with one "for receiving syringes" and another "for receiving a medical assembly." *See* PO Resp. 19–40.

Based upon Petitioner's argument and reasoning, which we adopt as our own, and the evidence cited in the Petition, Petitioner persuades us by a preponderance of evidence that the combination of Solazzo, Serany, and Disston teaches limitation 45a.

2. Limitation 45c

Limitation 45c refers to the following text from claim 45: "the medical assembly disposed in the second compartment, wherein the medical assembly comprises a coiled tubing coupled between a fluid drain bag and a Foley catheter." Ex. 1001, 30:64–67. Petitioner concedes that, although Solazzo discloses a Foley catheter in its kit, it does not expressly mention pre-connecting its Foley catheter to a drainage bag. Pet. 42. Petitioner argues that because an ordinarily skilled artisan understands a Foley catheter to be an "indwelling catheter" that remains in place within a patient for a

period of time, leaving Solazzo's catheter open-ended to drain into an open tray "is not a long-term solution." *Id*. (citing Ex. 1005, 2:42–46, 4:26–33; Ex. 1003 ¶¶ 11, 30, 31, 36). Instead, an ordinarily skilled artisan would have understood that a "closed container (e.g., a drainage bag) is required for a long-term catheterization solution." *Id*. (citing Ex.1003 ¶ 36; Ex. 1002 ¶ 385).

Petitioner contends that the combined teachings of Serany and Disston suggest connecting a drainage bag to Solazzo's Foley catheter. *Id*. at 43–44 (citing Ex. 1006, 3:23–32; Ex. 1002 ¶¶ 386–388). Serany describes connecting its catheter to drainage bottle 46, and Petitioner argues that an ordinarily skilled artisan would have found it obvious to simply substitute Disston's drainage bag 10 for Serany's bottle 46 and would have found the substitution to produce predictable results. *Id*.

Petitioner argues that an ordinarily skilled artisan would have been motivated to include a Foley catheter pre-connected to a drainage bag from Serany and Disston into Solazzo's tray to (1) reduce the number of steps in a catheterization procedure and (2) reduce the risk of infection. *Id*. at 45–46 (citing Ex. 1002 ¶ 349; Ex. 1003 ¶ 35; Ex. 1006,[11] 1:31–32, 3:23–36; Ex. 1008, 2:72, 3:1). Petitioner also argues that using a closed-system Foley catheter in Solazzo would still permit Solazzo's tray to be used for irrigation procedures. *Id*. at 46 (citing Ex. 1002 ¶ 393; Ex. 1003 ¶¶ 38, 41, 42). Petitioner also argues that an ordinarily skilled artisan would have been motivated to use the closed-system Foley catheters taught by Serany and

[11] Based on the context, we conclude that Petitioner intended to cite Exhibit 1006 (Serany) rather than Exhibit 1005 (Solazzo), which it inadvertently cited.

Disston in Solazzo's tray because doing so would have involved applying a known technique (closed-system catheter) to a known device (catheter kit) that was ready to be improved to reduce infection. *Id*. (citing Ex. 1002 ¶ 394).

Patent Owner responds that including a pre-connected bag to the Foley catheter in Solazzo's tray would have increased the size of Solazzo's tray to the point that the tray would no longer fit between a patient's legs, "defeating the entire purpose of Solazzo's design." PO Resp. 27–31 (citing Ex. 2026 ¶¶ 125–126; Ex. 2027 ¶¶ 102, 167–169). Patent Owner proffers evidence of various actual trays made by Petitioner that Ms. Chiappetta concludes are too small to accommodate a catheter, tubing, and drainage bag. *E.g.*, Ex. 2027 ¶ 169. However, on cross examination, Ms. Chiappetta conceded that the tray she analyzed would accommodate a Foley catheter, tubing, and drainage bag. Ex. 1073, 162:4–165:5; *see also* Ex. 1071 ¶¶ 28–39 (testimony from Dr. Yun examining capacity of Petitioner's tray to hold catheter, tubing, and drainage bag).

The Federal Circuit noted that Patent Owner had withdrawn its argument that "it would not have been obvious to add a medical assembly comprising a drainage bag to Solazzo's tray." Op. *4, n.10. Thus, Patent Owner would appear to have forfeited its argument relating to limitation 45c during the appeal.

Assuming arguendo that Patent Owner's argument relating to limitation 45c is preserved, based on our review of all the evidence, Petitioner persuades us by a preponderance of evidence that the combination of Solazzo, Serany, and Disston teaches limitation 45c.

3. Limitation 45d

Limitation 45d refers to the following text from claim 45: "at least one layer of wrap material enclosing the single layer tray within one or more folds of the at least one layer of wrap material." Ex. 1001, 31:1–3. Petitioner recognizes that Solazzo does not describe how its tray is packaged. Pet. 47. Petitioner relies upon Serany to describe limitation 45d because Serany discloses that its Foley catheter tray is "enclosed within an envelope 16." *Id*. at 47–48 (citing Ex. 1006, 1:13–16, 1:60–72, 2:1–20, Fig. 1). Based on the combined teachings of Solazzo and Serany, Petitioner argues that an ordinarily skilled artisan would have found it obvious to combine the outer packaging of Serany with Solazzo's tray. *Id*. at 49. Petitioner argues that both references relate to Foley catheters and related medical devices, Serany's packaging and Solazzo's tray were well-known items that could have been combined while performing their known functions, and the combination would have yielded predictable results. *Id*. at 49–51 (citing Ex. 1002 ¶¶ 401–402).

Patent Owner does not respond to Petitioner's showing for limitation 45d. *See* PO Resp. 19–40. Based upon Petitioner's argument and reasoning, which we adopt as our own, and the evidence cited in the Petition, Petitioner persuades us by a preponderance of evidence that the combination of Solazzo, Serany, and Disston teaches limitation 45d.

4. Limitation 45e

Limitation 45e refers to the following text from claim 45: "an outer packaging disposed about both the single layer tray and the at least one layer of wrap material." Ex. 1001, 31:4–5. Petitioner recognizes that Solazzo does not describe how its catherization kit is packaged. Pet. 50. Petitioner

relies upon Serany to describe limitation 45e because Serany discloses that its Foley catheter tray is "encased within an envelope 16." *Id*. at 50–51 (citing Ex. 1006, 1:13–16, 1:60–72, 2:1–20, Figs. 1, 2, 2a, 3; Ex. 1002 ¶¶ 404–408). Petitioner argues that an ordinarily skilled artisan would have been motivated to wrap Solazzo's kit as suggested by Serany to preserve the sterility of items in Solazzo's kit including at least the catheter and surgical gloves. *Id*. at 51–52 (citing Ex. 1002 ¶¶ 410–412). Based on the combined teachings of Solazzo and Serany, Petitioner argues that an ordinarily skilled artisan would have found it obvious to wrap Solazzo's kit as suggested by Serany and would have expected that doing so would have been successful. *Id*. (citing Ex. 1002 ¶¶ 409–412).

Patent Owner does not respond to Petitioner's showing for limitation 45e. *See* PO Resp. 19–40. Based upon Petitioner's argument and reasoning, which we adopt as our own, and the evidence cited in the Petition, Petitioner persuades us by a preponderance of evidence that the combination of Solazzo, Serany, and Disston teaches limitation 45e.

5. Objective Evidence of Nonobviousness

For the reasons expressed *infra* in Part IX, we find that Patent Owner's objective evidence of nonobviousness, considered in conjunction with all other evidence of record, does not weigh against a conclusion of obviousness for claim 45.

6. Conclusion

For all the reasons expressed above including weighing objective evidence of nonobviousness, we conclude that Petitioner has proven by a preponderance of evidence that the combined teachings of Solazzo, Serany, and Disston render claim 45 unpatentable as obvious.

B. DEPENDENT CLAIMS 46–48

Claim 46 depends from claim 45 and further recites: "wherein one of the first syringe or the second syringe contains lubricating jelly." Ex. 1001, 31:6–8. Claim 47 depends from claim 46 and further recites: "wherein another of the first syringe or the second syringe contains water." *Id.* at 31:9–11. Claim 48 depends from claim 47 and further recites: "wherein the water is sterile." *Id.* at 31:12–13. Thus, these three claims fully define the contents of both syringes in the kit as one containing lubricant and the other containing sterile water.

Petitioner argues that the combined teachings of Solazzo, Serany, and Disston render claims 46–48 unpatentable as obvious. Pet. 53–55. Petitioner argues that Solazzo's disclosure of including tube of lubricant fluid 140 in compartment 3 would suggest the well-known, simple substitution of containing the lubricant in a syringe rather than a tube. *Id.* at 53–54 (citing Ex. 1005, 4:41–46, Fig. 8; Ex. 1002 ¶¶ 417–419; Ex. 1003 ¶ 22; Ex. 1010, 52; Ex. 1015). Petitioner identifies Solazzo's inflation syringe as containing sterile water because Solazzo describes its tray as including "a syringe prefilled with bacteriostatic water," which an ordinarily skilled artisan would understand refers to sterile water. *Id.* at 54–55 (citing Ex. 1005, 1:15–21, 1:38–42; Ex. 1002 ¶ 422). Petitioner also notes that Serany describes filling an inflation syringe 45 with "sterile water." *Id.* at 55 (citing Ex. 1006, 3:50–51; Ex. 1002 ¶ 423).

Patent Owner does not respond to Petitioner's showing for claims 46 and 47. *See* PO Resp. 19–40 (addressing only claims 48 and 54 among claims linked to claim 45). Regarding claim 48, Patent Owner merely asserts without evidentiary support that none of Solazzo, Serany, or Disston

discloses "plural syringes, one filled with lubricant and the other with sterile water." *Id*. at 40. Patent Owner's unsupported argument fails to address the challenge as proffered by Petitioner, which is based on the combined teachings of Solazzo, Serany, and Disston, rather than these references individually. Accordingly, we find Patent Owner's argument to be unpersuasive.

Based upon Petitioner's argument and reasoning, which we adopt as our own, and the evidence cited in the Petition, Petitioner persuades us by a preponderance of evidence that the combined teachings of Solazzo, Serany, and Disston render claims 46–48 unpatentable as obvious.

C. DEPENDENT CLAIM 49

Claim 49 depends from claim 45 and recites: "further comprising a specimen jar disposed within the single layer tray." Ex. 1001, 31:14–15. Petitioner argues that the combined teachings of Solazzo, Serany, Disston, and Salvadori render claim 49 unpatentable as obvious. Pet. 67–68. Petitioner identifies Salvadori's specimen bottle 68 within its catheter tray as meeting the limitations introduced in claim 49. *Id*. (citing Ex. 1009, 1:12–16, 3:8, Fig. 1). Petitioner argues that an ordinarily skilled artisan would have been motivated to include a specimen jar, a well-known device in catheter trays, into Solazzo's kit to allow a practitioner to collect a urine sample when needed. *Id*. (citing Ex. 1010; Ex. 1013, 1:11; Ex. 1014, 1:21–25; Ex. 1002 ¶¶ 468–470).

Patent Owner does not respond to Petitioner's showing for claim 49. *See* PO Resp. 19–40 (addressing only claims 48 and 54 among claims linked to claim 45).

Based upon Petitioner's argument and reasoning, which we adopt as our own, and the evidence cited in the Petition, Petitioner persuades us by a preponderance of evidence that the combined teachings of Solazzo, Serany, Disston, and Salvadori render claim 49 unpatentable as obvious.

D. DEPENDENT CLAIMS 50 AND 51

Claim 50 depends from claim 45 and further recites: "the single layer tray comprising a lubricating jelly application compartment." Ex. 1001, 31:16–17. Claim 51 depends from claim 50 and further recites: "the lubricating jelly application compartment to receive lubricating jelly from one of the first syringe or the second syringe to lubricate at least some of the Foley catheter." *Id*. at 31:18–21.

Petitioner argues that the combined teachings of Solazzo, Serany, and Disston render claims 50 and 51 unpatentable as obvious. Pet. 55–56. Petitioner identifies Solazzo's lubricating wells 31, 33 as the claimed "lubricating jelly application compartment." *Id*. (citing Ex. 1005, 4:21–25, Figs. 1, 3). Although Solazzo expressly describes "tube of lubricant 140," which is deposited into wells 31, 33 to lubricate its catheter, Petitioner contends that replacing the tube with a syringe would have been obvious. *Id*. at 56 (citing Ex. 1005, 4:21–25; Ex. 1002 ¶¶ 427–430 and cross-referencing showing for claim 46 regarding replacing a tube with a syringe (*id.* at 54 (citing Ex. 1002 ¶ 419; Ex. 1003 ¶ 22))).

Patent Owner does not respond to Petitioner's showing for claims 50 and 51. *See* PO Resp. 19–40 (addressing only claims 48 and 54 among claims linked to claim 45).

Based upon Petitioner's argument and reasoning, which we adopt as our own, and the evidence cited in the Petition, Petitioner persuades us by a

preponderance of evidence that the combined teachings of Solazzo, Serany, and Disston render claims 50 and 51 unpatentable as obvious.

E. DEPENDENT CLAIMS 52 AND 53

Claim 52 depends from claim 45 and recites: "further comprising printed instructions for using the single layer tray." Ex. 1001, 31:23–24. Claim 53 depends from claim 52 and further recites: "the printed instructions to instruct application of lubricating jelly to the Foley catheter using a lubricating jelly application compartment of the single layer tray." *Id.* at 31:25–28.

Petitioner argues that the combined teachings of Solazzo, Serany, Disston, and Franks-Farah render claims 52 and 53 unpatentable as obvious. Pet. 71–73. Petitioner first argues that the limitations introduced in claims 52 and 53, which merely recite including printed instructions with the kit, are not entitled to patentable weight. *Id.* at 24–25 (citing *In re Ngai*, 367 F.3d 1336, 1339 (Fed. Cir. 2004) ("[Ngai] is not, however, entitled to patent a known product by simply attaching a set of instructions to that product.")). Alternatively, Petitioner identifies Franks-Farah's instructions 34 in its catheterization kit as the claimed "printed instructions" for performing a catheterization procedure, including lubricating the catheter. *Id.* at 71–72 (citing Ex. 1007, 4:12–16, Fig. 2A). Petitioner argues that an ordinarily skilled artisan would have been motivated to include Franks-Farah's instructions in Solazzo's kit to (1) "help ensure that physicians perform a catheterization or irrigation procedure using the proper technique" and (2) comply with Food and Drug Administration regulations issue in 2009 that required medical devices to include "adequate directions for use." *Id.* at 72–73 (citing Ex. 1002 ¶ 483; 21 C.F.R. § 801.5 (2009)). Petitioner also

argues that including instructions was applying a known technique to a known device that would have yielded predictable results. *Id*. at 73 (citing Ex. 1002 ¶ 484).

Patent Owner does not respond to Petitioner's showing for claims 52 and 53. *See* PO Resp. 19–40 (addressing only claims 48 and 54 among claims linked to claim 45).

Based upon Petitioner's argument and reasoning, which we adopt as our own, and the evidence cited in the Petition, Petitioner persuades us by a preponderance of evidence that the combined teachings of Solazzo, Serany, Disston, and Franks-Farah render claims 52 and 53 unpatentable as obvious.

F. DEPENDENT CLAIM 54

Claim 54 depends from claim 45 and recites: "further comprising one or more swabsticks disposed within the single layer tray." Ex. 1001, 31:29–31. Petitioner argues that the combined teachings of Solazzo, Serany, Disston, and Salvadori render claim 49 unpatentable as obvious. Pet. 68–70. Petitioner identifies Salvadori's swab sticks 60 within its catheter tray as meeting the limitations introduced in claim 54. *Id*. (citing Ex. 1009, 1:12–16, 3:4, Fig. 1). Petitioner argues that an ordinarily skilled artisan would have been motivated to include swab sticks, a well-known device in catheter trays, into Solazzo's kit to allow a practitioner cleanse the patient's genitals prior to insertion of the catheter. *Id*. (citing Ex. 1010, 52; Ex. 1002 ¶¶ 474–476). Petitioner also points out that Serany includes "balls of cleansing material" that serve the same purpose as swab sticks. *Id*. at 69 (citing Ex. 1006, 2:57–65; Ex. 1002 ¶ 474). Petitioner further argues that including swab sticks in Solazzo's catheterization kit merely involves improving a

known device by incorporating a known technique to clean the patient. *Id.* at 70 (citing Ex. 1002 ¶ 476).

Patent Owner argues that an ordinarily skilled artisan would not have incorporated Salvadori's swab sticks into Solazzo's kit because Salvadori's "rolled package" without syringes "teaches away" from combining Solazzo and Salvadori. PO Resp. 36. PO focuses on Salvadori's assertion that its kit provides advantages over typical kits because it "occupies less space." *Id.* (citing Ex. 1009, 3:62–67). Patent Owner cites no expert testimony to support its position. *Id.*

Patent Owner's argument is unpersuasive because neither Solazzo nor Salvadori criticizes the other for including or excluding swab sticks. Moreover, Serany suggests that cleansing material is desirable in a catheterization kit. Moreover, testimony from both parties' experts reveals that cleaning the insertion point on the patient's body before catheterization is desirable and that swabs and cotton balls are interchangeable for that purpose. Ex. 1002 ¶ 19; Ex. 1003 ¶ 58; Ex. 1071 ¶ 56; Ex. 1073, 37:16–39:12. Based upon Petitioner's argument and reasoning, which we adopt as our own, and the evidence cited in the Petition, Petitioner persuades us by a preponderance of evidence that the combined teachings of Solazzo, Serany, Disston, and Salvadori render claim 54 unpatentable as obvious.

G. DEPENDENT CLAIMS 55–58 AND 60

Each of claims 55–58 and 60 depends directly from claim 45 and further recites that the kit contains a particular piece of equipment related to performing a catheterization procedure located either in the tray or within the outer packaging. Ex. 1001, 31:32–41, 31:43–46. Petitioner identifies

either Solazzo or Serany as describing each added piece of equipment as summarized in the table below. Pet. 57–62.

Claim	Claimed Equipment	Prior Art
55	a Foley catheter securement device disposed within the single layer tray	Serany's safety pin 41 or rubber band 42. Ex. 1006, 3:1–5, 3:55–58.
56	an underbuttocks drape disposed within the outer packaging	Serany's waterproof underpad 20. *Id*. at 2:21–33.
57	gloves disposed within the outer packaging	Solazzo's surgical gloves. Ex. 1005, 3:15–19, Fig. 8.
58	hand sanitizer disposed within the outer packaging	Solazzo's antiseptic solution. Ex. 1005, 3:15–24.
60	a fenestrated drape disposed within the outer packaging	Serany's fenestrated drape 24. Ex. 1006, 2:30–33, Fig. 5.

Petitioner also provides testimony and objective evidence to support its argument that an ordinarily skilled artisan would have been motivated to include the various pieces of equipment in a catheterization kit and that doing so would have been merely using well-known equipment for a well-known purpose to yield predictable results. Pet. 57–62 (citing Ex. 1002 ¶¶ 434–436, 439–441, 446, 450–451; Ex. 1010, 52).

Patent Owner does not respond to Petitioner's showing for claims 55–58 and 60. *See* PO Resp. 19–40 (addressing only claims 48 and 54 among claims linked to claim 45).

Based upon Petitioner's argument and reasoning, which we adopt as our own, and the evidence cited in the Petition, Petitioner persuades us by a preponderance of evidence that the combined teachings of Solazzo, Serany, and Disston render claims 55–58 and 60 unpatentable as obvious.

VII. CLAIMS 61–74 AND 76

A. INDEPENDENT CLAIM 61

Independent claim 61 recites:

61. A medical procedure kit, comprising:

[a] a surface defining a single layer tray having a first compartment separated by a barrier from a second compartment, the second compartment configured for receiving a medical assembly comprising a Foley catheter, a coiled tubing, and a fluid drain bag;

[b] a first syringe and a second syringe disposed within the first compartment;

[c] the medical assembly disposed in the second compartment;

[d] at least one layer of wrap material enclosing the single layer tray within one or more folds of the at least one layer of wrap material; and

[e] an outer packaging disposed about both the single layer tray and the at least one layer of wrap material.

Ex. 1001, 31:47–61 (with added letter designations a–e to ease discussion).

Previously, we concluded that Petitioner had failed to prove by a preponderance of evidence that the combination of Solazzo, Serany, and Disston described limitations 61b and 61c and thus failed to establish that claim 61 was obvious. Dec. 16–17.

The Federal Circuit found that: "Although the prior art does not 'expressly' direct a skilled artisan to place two syringes in one compartment, it certainly was well within the possibilities available to him to do so." Op. *4. On this basis, the Federal Circuit found that we erred in our "determination that the prior art did not teach the claim limitation of storing two syringes in one compartment." *Id*. at *5. Thus, the Federal Circuit has found in Petitioner's favor that the combined teachings of Solazzo, Serany,

and Disston suggest limitation 61b. *Id*. The Federal Circuit vacated our conclusion that claim 61 remained patentable and remanded for further proceedings consistent with its opinion. *Id*. at *10. On remand, we must (1) address whether the combination of Solazzo and Serany describes or suggests all other elements of claim 61 and (2) consider and weigh Patent Owner's objective evidence of nonobviousness.

1. Limitation 61a

Limitation 61a refers to the following text from claim 61: "A medical procedure kit, comprising: a surface defining a single layer tray having a first compartment separated by a barrier from a second compartment, the second compartment configured for receiving a medical assembly comprising a Foley catheter, a coiled tubing, and a fluid drain bag." Ex. 1001, 31:47–52.

During the trial, the parties have contested the meaning of "a surface defining a single layer tray having a first compartment separated by a barrier from a second compartment," which is a portion of limitation 61a. PO Resp. 37–39; Reply 11–13; Sur-reply 6–7. On remand, Petitioner initially implied that the Federal Circuit resolved any claim interpretation issue by stating that the Federal Circuit had determined that independent claim 61 was "prima facie obvious." Pet. Remand Br. 1. Patent Owner correctly notes, however, that the Federal Circuit expressly analyzed only claim 45 which does not include the disputed language from limitation 61a. PO Remand Reply. 1–3. Additionally, we note that the parties have extensively briefed arguments on the proper interpretation of "a surface defining a single layer tray having a first compartment separated by a barrier from a second compartment." PO Remand Br. 3–9; Pet. Remand Reply 3–12; PO Remand

Reply 1–3. Essentially, the dispute focuses on the whether the phrase requires that the "barrier" be integrally formed with the adjacent first and second compartments in the single layer tray. PO Remand Br. 3–9; Pet. Remand Reply 4–12; PO Remand Reply 1–3. Petitioner argues that Patent Owner should be held to its proposed meaning of "barrier" in a parallel district court proceeding as referring to a "structure that separates one compartment from another compartment and prevents or blocks movement between the two." Pet. Remand Reply 4 (citing Reply 12 (citing Ex. 1022)). Patent Owner responds that "barrier" is used in numerous claims and its proposed meaning relates to the broader recitations of "barrier" but that other language in claim 61 narrows the meaning of "barrier" compared to the broader definition. More specifically, Patent Owner argues that the surface of the tray must define both compartments and the barrier that separates them, which means that the barrier is integrally formed with the first and second compartments. *See, e.g.*, Sur-reply 6–7 (citing Ex. 1001, 31;48–50, 4:59–61). For the reasons that follow, we agree with Patent Owner's interpretation of "barrier," but we find that Solazzo describes the claimed barrier along with the other aspects of limitation 61a, even under Patent Owner's narrower interpretation.

The claim language itself favors Patent Owner's interpretation. The claim recites "a surface defining a single layer tray having a first compartment separated by a barrier from a second compartment." Grammatically, the phrase requires us to identify which word[s] "defining" modifies, viz., what items from among the tray, first compartment, and second compartment are "defined" by the surface. We believe the most natural reading is that the surface defines all three items. Such a reading is

supported by comparing the phrase at issue in claim 61 with other phrases used in other claims that also incorporate "defining" and those that do not. For example, independent claims 1 and 25 recite "a surface defining at least two compartments" without mentioning a "barrier." Ex. 1001, 27:60–61 (claim 1), 29:42–43 (claim 25). To argue that these phrases do not require that the surface define both of the "at least two compartments" is grammatically untenable. Independent claim 77 recites "a single layer tray having a first compartment separated by a barrier from a second compartment." *Id*. at 32:36–37. Claim 77 thus recites all three items, the first and second compartments and the barrier separating them, without requiring that a surface define these features. Petitioner would have us interpret the phrases from claims 61 and 77 as meaning the same thing, even though they use different words to recite the compartments and barrier. We agree with Patent Owner that the different language used in claims 61 and 77 results in a different meaning, namely that claim 61 is narrower than claim 77 by requiring the surface of the tray to define the barrier as well as both compartments.

The Specification further supports Patent Owner's interpretation by explaining, in connection with Figure 1 (reproduced at right), that: "The tray 100, in one embodiment, is formed by a contoured surface 104 that defines the various features and compartments of the tray 100." *Id*. at 4:59–61. We read this passage as explicitly stating that all the compartments and various features of tray 100 are "defined" by a "contoured surface."

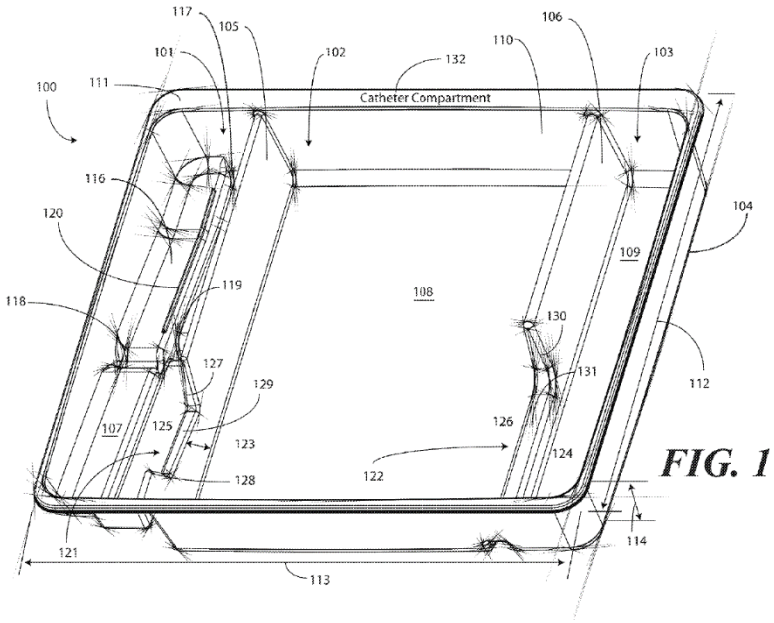

FIG. 1

Neither party argued during the trial that the prosecution history of the '088 patent is probative for resolving their dispute. PO Resp. 37–39; Reply 11–13; Sur-reply 6–7. Nor do we. We find the arguments raised in the Barrier Briefs to be duplicative of those raised in earlier briefing and discern no reason to address those arguments separately.

Based on our review of the plain language of claim 61, other relevant claims, and the Specification, we interpret "a surface defining a single layer tray having a first compartment separated by a barrier from a second compartment" as requiring that the first and second compartments and the barrier separating them be part of the same surface.

Petitioner argues, however, that even if we were to find that limitation 61a requires that the barrier be part of the same surface as the first and second compartments, Solazzo suggests such a barrier to an ordinarily

skilled artisan in the form of its divider wall 17. Pet. Remand Reply 4–6. Petitioner relies on Patent Owner's expert, Dr. Singh, who testified that an ordinarily skilled artisan would have understood that Solazzo's tray would have been made using thermoforming or injection molding. *Id*. at 5 (citing Ex. 2026 ¶ 138). Although Dr. Singh testified that thermoforming would not be consistent with forming Solazzo's divider wall 17, he did not testify that divider wall 17 could not have been formed using injection molding. Reply 13–14 (citing Ex. 2026 ¶ 138). Dr. Singh also testified that a different prior art single layer tray that was formed by injection molding depicted a molded surface defining multiple compartments separated by a barrier. Pet. Remand Reply 5–6 (citing Ex. 1013, Figs. 1–3; Ex. 1074, 149:3–12, 155:15–156:3; Ex. 2026 ¶ 138).

Patent Owner argues that Solazzo's divider wall 17 is "optional" and therefore "a distinct structural component that can be removed from or added to the tray." PO Remand Br. 3–5 (citing Ex. 1005, 3:52–53, 4:15, Figs. 1–2).

Based on our review of Solazzo, we discern no express description that divider wall 17 is removable as Patent Owner contends. However, we find that Solazzo implies that divider wall 17 is integrally formed with the adjacent compartments 3 and 27 because divider wall 17 prevents fluid from crossing the wall unless the fluid overflows the top of the wall. Ex. 1005, 4:15–20. Based on the testimony by Dr. Singh that Petitioner identifies in its briefing, we also conclude that an ordinarily skilled artisan would have understood that at least injection molding was a method for making Solazzo's tray.

The Specification explains that a surface defining two compartments and the barrier separating them can be manufactured using a wide array of methods as follows:

> The contoured surface 104 of the tray 100 can be manufactured in various ways. For example, in one embodiment, the tray 100 can be thermally formed on a mold from a soft thermoplastic, such as styrene or polystyrene. In another embodiment, the tray 100 can be injection molded. In another embodiment, the tray can be poured on a mold using a quick setting plastic, epoxy, or resin. Other methods of manufacture will be obvious to those of ordinary skill in the art having the benefit of this disclosure.

Id. at 4:61–5:3.

Based on our review of the evidence, we find that an ordinarily skilled artisan would have found it likely that Solazzo's tray was formed using thermoforming or injection molding. Both methods are described in the Specification as appropriate for forming the "surface defining a single layer tray having a first compartment separated by a barrier from a second compartment" of limitation 61a. No dispute remains about the remaining aspects of limitation 61a.

Based upon Petitioner's argument and reasoning, which we adopt as our own, and the evidence cited throughout the trial and remand briefing, Petitioner persuades us by a preponderance of evidence that Solazzo teaches limitation 61a.

2. Limitation 61c

Limitation 61c refers to the following text from claim 61: "the medical assembly disposed in the second compartment" and is materially identical to beginning of limitation 45c. *Compare* Ex. 1001, 31:55–56, *with id*. at 30:64–65. When addressing limitation 61c, Petitioner cross-references its showing for limitation 45c. Pet. 63–64 (cross-referencing *id*. at 42–46).

Patent Owner does not contest Petitioner's showing for limitation 61c. PO Resp. 37–39 (contesting Petitioner's showing only for limitation 61a).

Based upon Petitioner's argument and reasoning, which we adopt as our own, and the evidence cited in the Petition, Petitioner persuades us by a preponderance of evidence that Solazzo teaches limitation 61c.

3. Limitation 61d

Limitation 61d refers to the following text from claim 61: "at least one layer of wrap material enclosing the single layer tray within one or more folds of the at least one layer of wrap material" and is identical to the language of limitation 45d. *Compare* Ex. 1001, 31:57–59, *with id.* at 31:1–3. When addressing limitation 61d, Petitioner cross-references its showing for limitation 45d. Pet. 64 (cross-referencing *id*. at 47–50 (citing Ex. 1006, 1:13–16, 1:60–72, Fig. 2, 2a, 3; Ex. 1002 ¶¶ 396–402)). Patent Owner does not contest Petitioner's showing for limitation 61d. PO Resp. 37–39 (contesting Petitioner's showing only for limitation 61a).

Based upon Petitioner's argument and reasoning, which we adopt as our own, and the evidence cited in the Petition, Petitioner persuades us by a preponderance of evidence that Solazzo in view of Serany teaches limitation 61d.

4. Limitation 61e

Limitation 61e refers to the following text from claim 61: "at least one layer of wrap material enclosing the single layer tray within one or more folds of the at least one layer of wrap material" and is identical to the language of limitation 45e. *Compare* Ex. 1001, 31:57–59, *with id.* at 31:1–3. When addressing limitation 61d, Petitioner cross-references its showing for limitation 45e. Pet. 64 (cross-referencing *id*. at 50–53 (citing

Ex. 1006, 1:13–16, 1:60–72, Figs. 1, 2, 2a; Ex. 1002 ¶¶ 404–412)). Patent Owner does not contest Petitioner's showing for limitation 61e. PO Resp. 37–39 (contesting Petitioner's showing only for limitation 61a).

Based upon Petitioner's argument and reasoning, which we adopt as our own, and the evidence cited in the Petition, Petitioner persuades us by a preponderance of evidence that Solazzo in view of Serany teaches limitation 61e.

5. Objective Evidence of Nonobviousness

For the reasons expressed *infra* in Part IX, we find that Patent Owner has failed to demonstrate that objective evidence of nonobviousness weighs against a conclusion of obviousness for claim 61.

6. Conclusion

For all the reasons expressed above including weighing objective evidence of nonobviousness, we conclude that Petitioner has proven by a preponderance of evidence that the combined teachings of Solazzo, Serany, and Disston render claim 61 unpatentable as obvious.

B. DEPENDENT CLAIMS 62–74 AND 76

Dependent claims 62–74 and 76 ultimately depend from independent claim 61 and introduce materially the same limitations as those recited in dependent claims 46–58 and 60 respectively. *Compare* Ex. 1001, 31:6–41, 44–46 (claims 46–58 and 60), *with id*. at 31:62–32:29, 32–34 (claims 62–74 and 76). We discern no material differences between the parties' arguments regarding dependent claims 46–58 and 60 and dependent claims 62–74 and 76. Accordingly, for the reasons expressed in Parts VI.B–G above, we conclude that Petitioner has proven by a preponderance of evidence that the combined teachings of Solazzo, Serany, and Disston, along with either

Salvadori or Franks-Farah as described above in connection with claims 46–58 and 60, render claims 62–74 and 76 unpatentable as obvious.

VIII. CLAIMS 77–90 AND 92

A. INDEPENDENT CLAIM 77

Independent claim 77 recites:

77. A medical procedure kit, comprising:

[a] a single layer tray having a first compartment separated by a barrier from a second compartment configured for receiving a medical assembly;

[b] a first syringe and a second syringe disposed within the first compartment;

[c] the medical assembly disposed in the second compartment, the medical assembly consisting essentially of a Foley catheter coupled to a coiled tubing, wherein the coiled tubing is coupled to a fluid drain bag;

[d] at least one layer of wrap material enclosing the single layer tray within one or more folds of the at least one layer of wrap material; and

[e] an outer packaging disposed about both the single layer tray and the at least one layer of wrap material.

Ex. 1001, 32:35–49 (with added letter designations a–e to ease discussion).

Limitations 77a–e of claim 77 are identical to limitations 45a–e of claim 45 respectively and are collectively identical to limitations 61a–e of claim 61 respectively. *Compare id*. at 32:35–49 (limitations 77a–e), *with id*. at 30:58–31:5 (limitations 25a–f) and *id*. at 31:47–61 (limitations 61a–e).

Previously, we concluded that Petitioner had failed to prove by a preponderance of evidence that the combination of Solazzo and Serany described elements 77b and 77c and thus failed to establish that claim 77 was obvious. Dec. 17–18.

The Federal Circuit found that: "Although the prior art does not 'expressly' direct a skilled artisan to place two syringes in one compartment, it certainly was well within the possibilities available to him to do so." Op. *4. On this basis, the Federal Circuit found that we erred in our "determination that the prior art did not teach the claim limitation of storing two syringes in one compartment." *Id*. at *5. Thus, the Federal Circuit has found in Petitioner's favor that the combined teachings of Solazzo, Serany, and Disston suggest limitation 77b. *Id*. The Federal Circuit vacated our conclusion that claim 77 remained patentable and remanded for further proceedings consistent with its opinion. *Id*. at *10. On remand, we must (1) address whether the combination of Solazzo and Serany describes or suggests all other elements of claim 77 and (2) consider and weigh Patent Owner's objective evidence of nonobviousness.

Petitioner argues that claim 77 is unpatentable for the same reasons and evidence offered in connection with its challenges to claims 37 and 61. Pet. 64–65 (cross-referencing showing for limitations 61a and 45b–e). For all the reasons expressed in Parts VI.A and VII.A above, we similarly conclude that Petitioner has proven by a preponderance of evidence that the combined teachings of Solazzo, Serany, and Disston render claim 77 unpatentable as obvious.

B. DEPENDENT CLAIMS 78–90 AND 92

Dependent claims 78–90 and 92 ultimately depend from independent claim 77 and introduce materially the same limitations as those recited in dependent claims 46–58 and 60 respectively. *Compare* Ex. 1001, 31:6–41, 44–46 (claims 46–58 and 60), *with id*. at 32:50–33:17, 20–22 (claims 78–90 and 92). We discern no material differences between the parties' arguments

regarding dependent claims 46–58 and 60 and dependent claims 78–90 and 92. Accordingly, for the reasons expressed in Parts VI.B–G above, we conclude that Petitioner has proven by a preponderance of evidence that the combined teachings of Solazzo, Serany, and Disston, along with either Salvadori or Franks-Farah as described above in connection with claims 46–58 and 60, render claims 78–90 and 92 unpatentable as obvious.

IX. OBJECTIVE INDICIA OF NONOBVIOUSNESS

A. COLLATERAL ESTOPPEL

We made findings on the probative value of Patent Owner's objective evidence of nonobviousness in a related proceeding, IPR2019-00208, which involves a related patent, U.S. Patent No. 9,808,400 B2 (the "'400 patent"). IPR2019-00208, Paper 57 (the "208 Decision"), 22–26. All challenged claims of the '400 patent (i.e., claims 13, 14, 16, and 17) require a single layer tray, but none requires arranging two syringes in a single compartment according to their preferred order of use. IPR2019-00208, Ex. 1001, 11:47–12:28. We concluded that claims 13, 14, 16, and 17 of the '400 patent were unpatentable. 208 Decision, 34–35. Patent Owner did not appeal the 208 Decision.

Petitioner argues that, because the 208 Decision is now final and involved an identical issue, Patent Owner is estopped from "relying on secondary considerations." Pet. Remand Br. 20–27. We disagree.

IPR2019-00208 and this proceeding do not involve an "identical issue" despite Patent Owner relying on essentially the same body of objective evidence of nonobviousness in both proceedings. The challenged claims in this proceeding materially differ from those at issue in IPR2019-00208. *Compare* Ex. 1001, 30:58–33:22, *with* IPR2019-00208, Ex. 1001,

11:47–12:28; *see also* PO Remand Br. 26–27. The material differences in the claims, alone, and thus the issues previously decided, precludes a finding of collateral estoppel. Therefore, we conclude that Patent Owner is not collaterally estopped from relying upon its objective evidence of nonobviousness. Rather, we consider and weigh that evidence as it applies to the claims at issue in this proceeding below.

B. LEGAL PRINCIPLES

We necessarily must evaluate and weigh objective evidence of nonobviousness (alternatively, "secondary considerations") in determining whether any challenged claim is unpatentable as obvious. Op. *10.

> In order to accord substantial weight to secondary considerations in an obviousness analysis, "the evidence of secondary considerations must have a 'nexus' to the claims, i.e., there must be 'a legally and factually sufficient connection' between the evidence and the patented invention." *Henny Penny Corp. v. Frymaster LLC*, 938 F.3d 1324, 1332 (Fed. Cir. 2019) (quoting *Demaco Corp. v. F. Von Langsdorff Licensing Ltd.*, 851 F.2d 1387, 1392 (Fed. Cir. 1988)). "The patentee bears the burden of showing that a nexus exists." *WMS Gaming Inc. v. Int'l Game Tech.*, 184 F.3d 1339, 1359 (Fed. Cir. 1999). "To determine whether the patentee has met that burden, we consider the correspondence between the objective evidence and the claim scope." *Henny Penny*, 938 F.3d at 1332.

Fox Factory, Inc. v. SRAM, LLC, 944 F.3d 1366, 1373 (Fed. Cir. 2019).

C. PRESUMED NEXUS

[P]resuming nexus is appropriate "when the patentee shows that the asserted objective evidence is tied to a specific product and that product 'embodies the claimed features, and is coextensive with them.'" *Id*. (quoting *Polaris Indus., Inc. v. Arctic Cat, Inc.*, 882 F.3d 1056, 1072 (Fed. Cir. 2018) (quoting *Brown & Williamson Tobacco Corp. v. Philip Morris Inc.*, 229

F.3d 1120, 1130 (Fed. Cir. 2000))). "Whether a product is coextensive with the patented invention, and therefore whether a presumption of nexus is appropriate in a given case, is a question of fact." *Id*.

> [T]he degree of correspondence between a product and a patent claim falls along a spectrum. At one end of the spectrum lies perfect or near perfect correspondence. At the other end lies no or very little correspondence, such as where "the patented invention is only a component of a commercially successful machine or process." *Id*. Although we do not require the patentee to prove perfect correspondence to meet the coextensiveness requirement, what we do require is that the patentee demonstrate that the product is essentially the claimed invention. *See id*.

Fox Factory, 944 F.3d at 1374 (quoting and citing *Demaco*, 851 F.2d at 1392). Patent Owner bears the burden of proving that its objective evidence of nonobviousness is attributable to the combination of features that is claimed rather than "prior art features in isolation or unclaimed features." *Id*. at 1378.

Petitioner argues that Patent Owner fails to carry this burden because: (1) the claims fail to recite a critical feature (that the syringes be arranged in the tray according to their order of use); (2) the claimed critical feature is taught by the prior art (a single layer tray); or (3) Patent Owner's showing is outweighed by the strong prima facie case of obviousness. Pet. Remand Br. 4–9. Petitioner argues that Patent Owner, through testimony by its experts, identifies two critical features as the basis for its argument that a nexus exists between the claims and the objective evidence of nonobviousness, namely, a single layer tray and syringes being arranged in their order of use. *Id*. at 6 (citing Reply 15 (citing Ex. 2041 ¶ 125; Ex. 2026 ¶ 208; Ex. 2028 ¶¶ 8, 23)); *see also* Tr. 84:10–17 (Judge Goodson: "the

specific combination that you're relying on to establish nexus is a single-level tray with syringes arranged according to their order of use" . . . Mr. Hoover: "I think that's basically right."). Petitioner argues that Patent Owner fails to demonstrate a presumed nexus between the claimed subject matter and any of its objective evidence for all claims, but for different reasons. We find Petitioner's arguments to be persuasive for the reasons expressed below in connection with groups of claims that we consider to be substantively similar.

Petitioner correctly points out that none of the challenged independent claims 45, 61, and 77 recites the second feature alleged to demonstrate nexus, syringes arranged according to their order of use. Pet. Remand Br. 6; *see also* Ex. 1001, 30:58–31:5 (claim 45), 31:47–61 (claim 61), 32:35–49 (claim 77). None of the dependent claims recites this feature either. Ex. 1001, 30:58–33:22. The first feature, the tray being a single layer, is required in each of independent claims 45, 61, and 77, and thus all challenged claims. Ex. 1001, 30:59 (claim 45), 31:48 (claim 61), 32:36 (claim 77). However, the claimed feature, a single layer tray, was well known in the prior art, for example, as shown by Solazzo. Ex. 1005, Figs. 1, 8. Patent Owner cannot establish nexus by linking objective evidence of non-obviousness to "prior art features in isolation or unclaimed features." *Fox Factory*, 944 F.3 at 1378. For these reasons, we find that Patent Owner has not proven that a presumption of nexus exists.

D. NEXUS IN FACT AND WEIGHT OF OBJECTIVE EVIDENCE

> A finding that a presumption of nexus is inappropriate does not end the inquiry into secondary considerations. *See In re Huang*, 100 F.3d 135, 140 (Fed. Cir. 1996). To the contrary, the patent owner is still afforded an opportunity to prove nexus by showing that the evidence of secondary considerations is the

> "direct result of the unique characteristics of the claimed invention." *Id.*

Fox Factory, 944 F.3d at 1373–74. Additionally, a presumption of nexus is rebuttable.

> The presumption of nexus is rebuttable: a patent challenger may respond by presenting evidence that shows the proffered objective evidence was "due to extraneous factors other than the patented invention." *Demaco*, 851 F.2d at 1393. Such extraneous factors include additional unclaimed features and external factors, such as improvements in marketing. *See, e.g.*, *Ecolochem, Inc. v. S. Cal. Edison Co.*, 227 F.3d 1361, 1378 (Fed. Cir. 2000) (applying presumption even though commercial embodiment had unclaimed mobility feature); *Ormco Corp. v. Align Tech., Inc.*, 463 F.3d 1299, 1312 (Fed. Cir. 2006) (holding that evidence that commercial success was due to unclaimed or non-novel features of device "clearly rebuts the presumption that [the commercial product's] success was due to the claimed and novel features". However, a patent challenger cannot successfully rebut the presumption with argument alone—it must present evidence. *Brown & Williamson*, 229 F.3d at 1130 (citing *Demaco*, 851 F.2d at 1393).

WBIP, 829 F.3d at 1329.

1. Long-felt Need

Patent Owner argues that its single-layer tray met a long-felt need to reduce catheter-associated urinary tract infections ("CAUTI"). PO Resp. 46–49. The argument rests largely upon testimony from Ms. Chiapetta. *Id.* (citing Ex. 2027 ¶¶ 73, 85–91, 93–97, 105–124, 126–136, 197–205). Ms. Chiappetta testifies that the single layer tray "reduced the likelihood of accidental contamination" to reduce the incidence of CAUTI. Ex. 2027 ¶ 127. To support her conclusion that single layer trays reduce the incidence of CAUTIs, Ms. Chiappetta cites anecdotal reports from three hospitals that used Patent Owner's commercial ERASE CAUTI trays and

reported reduced incidence of CAUTIs. *Id*. ¶¶ 131–135 (citing Ex. 2049; Ex. 2050; Exs. 2057–2059).

Petitioner persuasively points out that the underlying evidence from these three hospitals fails to support Patent Owner's claims because: (1) the hospital did not report infection rates at all (Ex. 2057, 4); (2) Patent Owner cherry-picked data in a manner that distorted the outcome (Ex. 2058, 7; Ex. 1087, 2); and (3) the data reflected a reduction in infection rates that mostly occurred before the hospital bought trays from Patent Owner (Ex. 1085, 15). Reply 18–21. Petitioner also persuasively discredits Ms. Chiappetta's testimony that CAUTI rates declined in 2015–2016 after single level trays "had time to gain traction in the market," Ex. 2027 ¶ 73, because she was unaware that the apparent reduction in infection rates largely reflected a change in the definition of CAUTI in 2015 to exclude yeast infections, Ex. 1073, 209:9–22, 211:6–20; Ex. 1042. Reply 20–21. Finally, Petitioner persuasively demonstrates that CAUTI rates declined steadily before single level trays gained market share and thus decreased for reasons unrelated to the claimed tray. *Id*. at 21 (citing Ex. 1042, 5; Ex. 1073, 218:7–14; Ex. 1071 ¶¶ 60–72[12]). Based on the entire record, we conclude that Patent Owner fails to establish that single level trays reduced CAUTI rates rather than other factors identified by Petitioner. Accordingly, we consider Patent Owner's argument that the claimed invention addressed a long-felt need to be unpersuasive.

[12] It is apparent from the context and our review of the record that Petitioner mistakenly cited Exhibit 1070 rather than Exhibit 1071.

2. Copying and Praise

"[P]raise from a competitor tends to indicate that the invention was not obvious." *In re Cree, Inc.*, 818 F.3d 694, 702 (Fed. Cir. 2016). "'Copying may indeed be another form of flattering praise for inventive features,' . . . and thus evidence of copying tends to show nonobviousness." *WBIP*, 829 F.3d at 1331 (quoting *Crocs, Inc. v. Int'l Trade Comm'n*, 598 F.3d 1294, 1311 (Fed. Cir. 2010)).

> Not every competing product that arguably falls within the scope of a patent is evidence of copying; otherwise, "every infringement suit would automatically confirm the nonobviousness of the patent." Our case law holds that copying requires evidence of efforts to replicate a specific product, which may be demonstrated through internal company documents, direct evidence such as disassembling a patented prototype, photographing its features, and using the photograph as a blueprint to build a replica, or access to the patented product combined with substantial similarity to the patented product.

Wyers v. Master Lock Co., 616 F.3d 1231, 1246 (Fed. Cir. 2010) (quoting *Iron Grip Barbell Co. v. USA Sports, Inc.*, 392 F.3d 1317, 1325 (Fed. Cir. 2004)) (other citations omitted).

Petitioner and Patent Owner focus on dramatically different facts when addressing whether Petitioner copied Patent Owner's ERASE CAUTI tray. Patent Owner focuses on Petitioner's actions earlier in the development process before it finalized and released the SureStep trays. For example, Petitioner commissioned a survey of a group of 17 users to understand the appeal of Patent Owner's ERASE CAUTI tray. *See* Ex. 2100. Patent Owner argues that the report concluded that participants "preferred [Patent Owner's] tray as having a '[m]ore intuitive insertion sequence due to order of components and single level tray,' and criticized

[Petitioner's] tray as 'not intuitive.'" PO Remand Br. 19 (citing Ex. 2028 ¶ 32; Ex. 2100 at BARD 0227940; Ex. 2101 at BARD 0227984). Various employees of Petitioner identified the reasons underpinning Patent Owner's competitive threat as "1 level tray, more user friendly" (Ex. 2048, 4); "single layer tray, such as Medline's would be preferred" (Ex. 2081, 2); and "kit components and configuration." (Ex. 2082, 2). PO Remand Br. 19. Patent Owner cites numerous examples of Petitioner expressing a need to develop a new product that includes a single layer tray and an intuitive layout. PO Remand Br. 19–20 (citing Ex. 2086, 2–3; Ex. 2110, 3; Ex. 2106 at BARD 0004235; Ex. 2107 at BARD 0333084; Ex. 2108; Ex. 2092, 1).

Petitioner also conducted an internal design contest to create a product to compete with the ERASE CAUTI tray, which ultimately resulted in a prototype. Ex. 2066. Below, we reproduce an image of the prototype tray made by Petitioner on the left and an image of ERASE CAUTI rotated 180 degrees to ease comparison on the right.

Petitioner's prototype tray

ERASE CAUTI tray

Petitioner's witness in related litigation admitted that the prototype and ERASE CAUTI trays had "essentially the same layout." Ex. 2068,

259:11–261:15; Ex. 1082, 4. But, Petitioner persuasively demonstrates that it never sold the prototype tray, which Petitioner persuasively argues "bears little resemblance to the SureStep tray." Reply 28 (citing Ex. 1070 ¶¶ 40–45).

Petitioner contends that its SureStep trays dramatically differed from Patent Owner's ERASE CAUTI tray and more closely resembled a prior art tray described in U.S. Patent No. 4,160,505 (Ex. 1013, "Rauschenberger"). Petitioner supports its contention with the exemplary images reproduced below.

Bard SureStep	Medline ERASE CAUTI

The image above illustrates one of Petitioner's SureStep trays on the left and Patent Owner's ERASE CAUTI tray on the right. The second image (shown below) illustrates the same SureStep tray on the left and the prior art tray shown in Rauschenberger's Figure 2 on the right.

Bard SureStep	Rauschenberger
	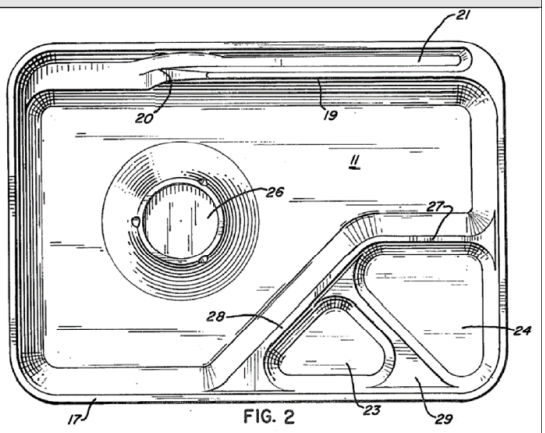

Petitioner argues, for example, that the SureStep trays bear numbered steps printed on the tray rather than being designed to be used in a "left-to-right configuration" as like Patent Owner's ERASE CAUTI tray. Pet. Remand Br. 12 (citing Reply 29 (citing Ex. 1073, 251:2–13)). The printed steps on the SureStep tray advise the user to move from bottom-to-top, left-to-right, and right-to-left. *Id*. (citing Ex. 1070 ¶¶ 48–49).

Based on the entirety of evidence, Patent Owner persuades us that Petitioner made a prototype that was a "copy" of the ERASE CAUTI tray and ultimately adopted the single layer feature in its SureStep trays. Petitioner's initial reaction to the "competitive threat" posed by the ERASE CAUTI tray to incorporate a single layer tray does tend to weigh against a finding of obviousness. However, we agree with Petitioner that (1) it never sold the prototype tray, and (2) the commercial SureStep tray was not a copy of the ERASE CAUTI tray but more closely resembles the Rauschenberger tray. Petitioner's SureStep trays included an altered single layer feature that was indisputably well known within the prior art, which diminishes the probative value of Patent Owner's evidence of copying and praise. On

balance, we find that the evidence of copying and praise slightly favors a finding of nonobviousness.

3. Failure of Others

Patent Owner argued during the trial that Petitioner's design contest and the resulting prototype reflected a "failure of others" because (1) Petitioner "devoted great resources to this project," Sur-reply 14 (citing Ex. 2068, 251:13–25, 117:21–120:5, 139:15–21, 143:1–15, 189:16–190:1, 234:11–237:24, 238:7–240:4, 265:20–266:4; Ex. 2070; Ex. 2097), and (2) Ms. Chiappetta testified that Petitioner "tried, but failed, to solve the CAUTI problem," Ex. 2027 ¶¶ 98–104. Petitioner responds that the design contest succeeded because important ideas were generated that ultimately were incorporated into the SureStep product. Pet. Remand Br. 13 (citing Reply 29–30); Reply 29–30 (citing Ex. 1070 ¶¶ 57–60; Ex. 2066, 1, 9; Ex. 2065, 89:24–90:12, 98:3–20). Patent Owner, by recognizing that Petitioner did not expend great effort, implies that its evidence of "failure of others" is weak at best, stating "regardless of the effort expended, [Petitioner] ultimately chose to copy [Patent Owner]." PO Remand Reply. 9. We agree with Patent Owner's implication and discern no logical or evidentiary support for its argument that "failure of others" weighs against a finding of obviousness.

4. Commercial Success

Each party proffers its own expert, Dr. Rao for Patent Owner and Dr. Sheridan for Petitioner, to analyze the sales data and offer opinions on the relationship between sales, "commercial success," and obviousness. Ex. 1072; Ex. 2028. Both experts analyze data for four products, Petitioner's sales of Legacy, Advance, and SureStep trays, and Patent

Owner's sales of ERASE CAUTI kits. Ex. 1072; Ex. 2028. Of these, only the SureStep and ERASE CAUTI kits include a single layer tray. Both experts include spreadsheets alleged to be reporting the unit sales, revenues, profits, and average selling prices for 2006 through 2018. Ex. 2028, p. 65 (Tab 3); Ex. 1072, p. 102[13] (Schedule 5.0). Based on our close examination of this data, we find that both witnesses materially agree on the numbers of units sold and revenues for all but Petitioner's "Legacy" products. *Compare* Ex. 2028, p. 65 (Dr. Rao's data), *with* Ex. 1072, p. 102 (Schedule 5.0) (Dr. Sheridan's data showing 22.4% higher unit sales and 38.0% higher revenue for Legacy than Dr. Rao's data). Significant differences exist in the data for Legacy sales during 2007 through 2013, with especially large differences during 2008 through 2011. *Compare* Ex. 2028, p. 65 (Dr. Rao's data), *with* Ex. 1072, p. 102 (Schedule 5.0) (Dr. Sheridan's data showing 22.4% higher unit sales and 38.0% higher revenue for Legacy than Dr. Rao's data).

Based on our careful review of both reports, we find that Dr. Sheridan's data is more reliable because Dr. Sheridan cites and provides copies of the evidence upon which his numbers for the Legacy product are based. Ex. 1072 ¶ 99 (citing Schedule 5.0, which cites Schedules 6.0 (ERASE CAUTI), 7.0 (SureStep), 8.0 (Advance), and 9.0 (Legacy with Schedule 9.0 citing Schedule 9.6 for unit sales, which cites Bard_1086170 (Ex. 1098)). Dr. Rao cites "BARD_1087970_HIGHLY

[13] Dr. Sheridan's report does not include page numbers, but, when necessary, we refer to the page number as revealed in the electronic version of the report. When available and helpful, we also refer to Dr. Sheridan's own labels for the various schedules in his report (e.g., Schedule 5.0).

CONFIDENTIAL.xlsx" as the source of his Legacy information. We, however, cannot verify the accuracy of Dr. Rao's numbers because we cannot identify a copy of the cited evidence in the record of this proceeding. Ex. 2028, p. 65 (Tab 3).

Using the data from Dr. Sheridan's spreadsheet, we have generated the chart below to illustrate the annual unit sales of the Legacy, Advance, SureStep, and ERASE CAUTI products from 2006 through 2018.[14]

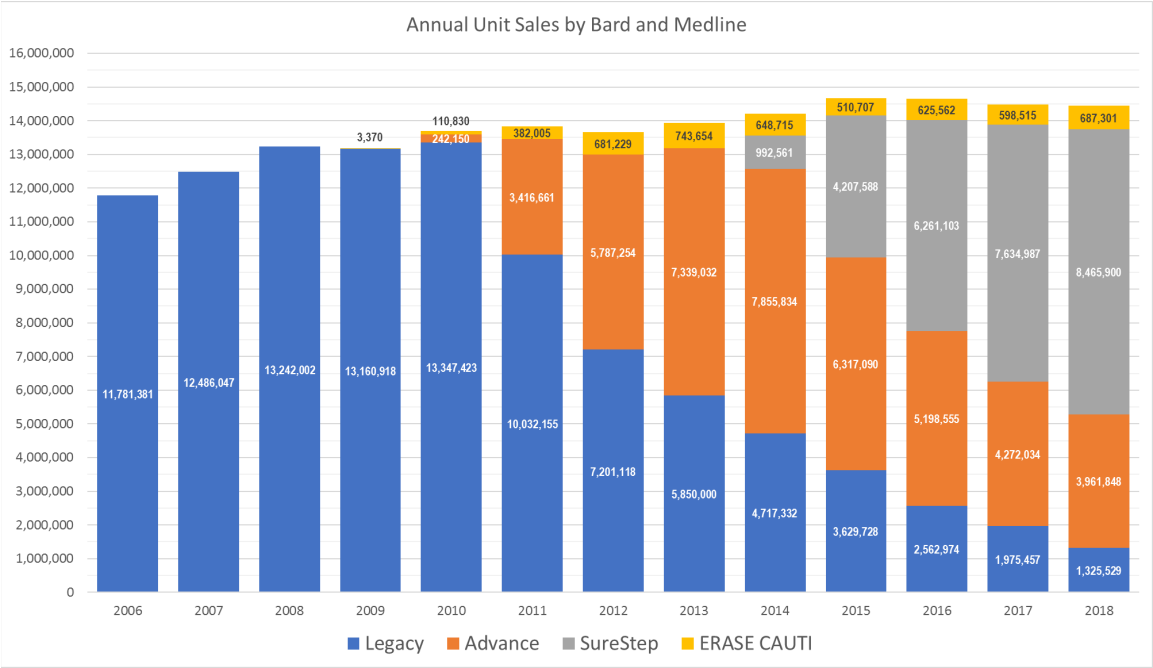

The data reveals that Petitioner's total unit sales of all its catheter trays remained comparatively stable throughout the entire reported period with year-over-year changes ranging from -3.4% to +6.1%. Ex. 3003. Petitioner argues that it "actively converted Advance and Legacy customers to SureStep" and "converted its customers to SureStep at the same rate it previously converted its customers to Advance" from Legacy. Reply 32

[14] We copied and transposed relevant data from Dr. Sheridan's spreadsheet into a new spreadsheet, which we used to generate the chart. Ex. 3003.

(citing Ex. 1072 ¶ 100). We find Petitioner's argument persuasive based on the data reflected in the chart above.

The chart also reflects that Patent Owner's annual unit sales grew relatively quickly but at a declining rate from 2010 to 2012 immediately after ERASE CAUTI was introduced in 2009. Ex. 1072 ¶ 88; Ex. 3003. Even with this fast growth, ERASE CAUTI sales did not meet Patent Owner's expectations. Ex. 1072 ¶ 89 (citing Ex. 1093). ERASE CAUTI sales declined in 2014, the year that Petitioner's SureStep was introduced, and declined again in 2015, but largely rebounded in 2016 through 2018. *Id*. Patent Owner argues that the decline in ERASE CAUTI sales during 2014 was caused by Petitioner entering the market with its single layer SureStep kit. Sur-reply 16. However, our review of Patent Owner's internal management report from 2014 identifies the more likely reason for the decline was the poor quality of the components in the ERASE CAUTI kit. The report states:

> The ERASE CAUTI line has experienced several significant quality issues over the last two years. These issues, combined with a lack of key-connections at the higher levels at our accounts, have resulted in the loss of our largest customers thus affecting our reputation amongst the sales team. As a result, the past 12 months have been spent raising the bar on the quality of the Urological product line in an effort to make our product line surpass the expectations of our customers. We are now in a situation where we must prove to the sales force that this is a product they should want to sell.

Ex. 1065, 12–13. The report explained the precise reasons for losing a large portion of ERASE CAUTI sales as follows:

> Approximately $2.39M in Acute Care business has been lost over the past 12 months at 4 key healthcare systems; Providence Health & Services, Ohio Health, Wake Forrest, and University

> of Indiana. This business was lost due to a combination of quality and sales related issues; sample ports breaking off, drainage, Silvertouch [catheter] malfunctions, latex catheter balloon deflation and poor clinical relationships to name a few.

Id. at 2. Patent Owner's ERASE CAUTI sales declined by about $944K. Ex. 3003. If Patent Owner had retained the $2.39M in business lost directly because of poor quality components, Patent Owner would have reported an increase in sales for 2014 of almost $1.5M (or about 15% increase over 2013). We find that these quality issues and the dramatic effect that they had on sales of ERASE CAUTI trays demonstrate that the quality of the items in the kits are a primary driver of sales success or failure, not the number of layers in the tray, or the layout of items in the tray.

We infer that the importance of the quality of items in a kit as a driver of sales is further demonstrated by how many customers continued to use kits with two trays rather than one during the relevant time period. Until 2017, eight years after Patent Owner introduced ERASE CAUTI and three years after Petitioner introduced SureStep, Petitioner sold more kits with two-layer trays than both companies sold kits with single layer trays. Even in 2018, Petitioner's two-layer Legacy and Advance kits accounted for about 43% of the parties' combined sales, and in 2019 they accounted for more than 36% of the parties' combined sales. Ex. 1072 ¶ 88; Ex. 3003.

Although not shown in the chart above, Patent Owner, acting as a distributor, also sold Petitioner's Legacy, Advance, and SureStep kits between 2014 and 2018 (after the introduction of SureStep in 2014). Ex. 1072 ¶ 90. Further demonstrating the market equivalence of two-layer and single layer trays, Patent Owner consistently sold about twice as many of Petitioner's Legacy and Advance two-layer kits as it sold its own ERASE

CAUTI kits during 2014 and 2018. Ex. 1072 ¶ 91, Schedules 6.0, 10.1, 10.5. Patent Owner also sold about 1.5 times the number of Petitioner's Legacy and Advance two-layer kits as it sold Petitioner's single layer SureStep kits. *Id*.

Rather, Petitioner persuasively argues that its ability to retain existing customers was driven by factors other than a switch to a one-layer tray in the SureStep kit, namely: (1) brand loyalty; (2) the distributors and Group Purchasing Organizations involved; (3) price; and (4) quality. Reply 34 (citing Ex. 1071 ¶¶ 116–126; Ex. 1072 ¶ 83). To the extent that Patent Owner penetrated the market with ERASE CAUTI, Petitioner persuasively argues that Patent Owner did so by competing on price. *Id*. 34–35 (citing Ex. 1072 ¶¶ 109–110).

Patent Owner contends that Petitioner sold SureStep for an average of $1.10 more than Advance. PO Resp. 60 (citing Ex. 2028 ¶¶ 46–49); Ex. 2028 ¶ 46 (summarizing Dr. Rao's analysis of price differences between SureStep and Advance). Dr. Rao notes that SureStep kits had a single layer tray with an "improved component layout" when compared to Advance. Ex. 2028 ¶ 47 (citing BARD_0004235–0004236 (Ex. 2106, 1–2)). Dr. Rao concludes that "the claimed features command a price premium when incorporated in catheterization kits." Ex. 2028 ¶ 49.

After carefully reviewing Dr. Rao's analysis of price differences, we identified a number of issues that diminish the weight we accord his conclusion. First, the evidence upon which Dr. Rao relies when comparing features of SureStep and Advance describes Petitioner's prototype tray, not SureStep. *See* Ex. 2106, 1 (referring to "Bearcat1"). Even assuming that the improvements noted in Exhibit 2106 were also present in SureStep,

Exhibit 2106 lists three improvements in the prototype tray other than "Single level tray" and "Improved component layout," namely: "Improved labeling," "New foam swabs," and "Drainage system tubing design improvements." Ex. 2106, 2. The prototype single layer kit was also to include an improved "Fidelis" catheter. *Id*. Dr. Rao does not comment upon or analyze the effect, if any, on how these other three improvements affected the price or performance of SureStep compared to Advance. Ex. 2028 ¶¶ 46–49.

Petitioner responds that the price of Patent Owner's ERASE CAUTI kits was comparable to Patent Owner's previous two-layer kit. Reply 33 (citing PO Resp. 48). Petitioner also responds that Patent Owner sold Petitioner's Advance kits at a higher average price than ERASE CAUTI kits. *Id*. (citing Ex. 1072 ¶ 109). Finally, Petitioner criticizes Dr. Rao's analysis of the alleged "price premium" that SureStep commanded over Advance as failing to account for the higher cost of goods for SureStep resulting, for example, from SureStep including peri-care products that were not included in the Advance kit. *Id*. (citing Ex. 1072 ¶¶ 113–125). We have reviewed the evidence upon which Petitioner bases its response and find it to persuasively rebut Patent Owner's argument that the inclusion of claimed features in the SureStep kits commanded a price premium over prior Advance kits.

After a thorough review of the evidence relating to commercial success, we find that the commercial success of the parties' products was not the direct result of the claimed features of a single layer tray or Patent Owner's arrangement of syringes in the tray. Accordingly, we find that Patent Owner has not shown that the "commercial success" of kits incorporating a single layer tray, an arrangement of syringes according to

their order of use, or both weighs significantly against a conclusion of obviousness.

5. Conclusion

For the reasons expressed above, Patent Owner's objective evidence of nonobviousness does not weigh significantly against a conclusion of obviousness for any claim at issue on remand.

X. CONCLUSION

For all the reasons expressed above, Petitioner has not demonstrated by a preponderance of the evidence that claims 45–58, 60–74, 76–90, and 92 are unpatentable for obviousness.

Claims	35 U.S.C. §	References	Claims Shown Unpatentable	Claims Not Shown Unpatentable
45–48, 50, 51, 55–58, 60–64, 66, 67, 71–74, 76–80, 82, 83, 87–90, 92	103	Solazzo, Serany, Disston	45–48, 50, 51, 55–58, 60–64, 66, 67, 71–74, 76–80, 82, 83, 87–90, 92	
49, 54, 65, 70, 81, 86	103	Solazzo, Serany, Disston, Salvadori	49, 54, 65, 70, 81, 86	
52, 53, 68, 69, 84, 85	103	Solazzo, Serany, Disston, Franks-Farah	52, 53, 68, 69, 84, 85	

Claims	35 U.S.C. §	References	Claims Shown Unpatentable	Claims Not Shown Unpatentable
55, 71, 87	103	Solazzo, Serany, Disston, Bierman	55, 71, 87	
		Overall Outcome	45–58, 60–74, 76–90, 92	

XI. ORDER

For the reasons given, it is:

ORDERED that Petitioner has demonstrated by a preponderance of evidence that claims 45–58, 60–74, 76–90, and 92 of U.S. Patent No. 9,745,088 B2 are unpatentable as obvious under 35 U.S.C. § 103; and

FURTHER ORDERED that because this is a final written decision, the parties to this proceeding seeking judicial review of our Decision must comply with the notice and service requirements of 37 C.F.R. § 90.2.

PETITIONER:

Mehran Arjomand
Dylan James Raife *(pro hac* vice)
MORRISON & FOERSTER LLP
marjomand@mofo.com
draife@mofo.com

PATENT OWNER:

Jeffrey P. Kushan
Courtney Cronin
Nathaniel C. Love (pro hac vice)
SIDLEY AUSTIN LLP
jkushan@sidley.com
courtney.cronin@sidley.com
nlove@sidley.com