Trials@uspto.gov
571.272.7822

Paper 45
Entered: April 13, 2020

UNITED STATES PATENT AND TRADEMARK OFFICE

BEFORE THE PATENT TRIAL AND APPEAL BOARD

INNOVEX DOWNHOLE SOLUTIONS, INC.,
Petitioner,

v.

BAKER HUGHES OILFIELD OPERATIONS, LLC,
Patent Owner.

IPR2019-00158
Patent 9,080,439 B2

Before MITCHELL G. WEATHERLY, CARL M. DEFRANCO, and RYAN H. FLAX, *Administrative Patent Judges.*

FLAX, *Administrative Patent Judge*.

JUDGMENT
Final Written Decision
Determining All Challenged Claims Unpatentable
35 U.S.C. § 318(a)

I. INTRODUCTION

Baker Hughes Oilfield Operations, LLC ("Patent Owner") is the owner of U.S. Patent 9,080,439 B2 ("the '439 patent"). Innovex Downhole Solutions, Inc. ("Petitioner") filed a Petition requesting *inter partes* review of claims 1–23 of the '439 patent. Paper 1 ("Pet."). Patent Owner filed a Patent Owner's Response to Petition. Paper 19 ("PO Resp."). Thereafter, Petitioner filed a Reply (Paper 31, "Pet. Reply"), and Patent Owner filed a Sur-Reply (Paper 35, "PO Sur-Reply"). A final hearing was conducted on January 14, 2020, where the parties presented oral argument. *See* Paper 44 ("Hr'g Tr.").

We have jurisdiction for this matter under 35 U.S.C. § 6. After considering the parties' arguments and the evidence of record, we conclude that Petitioner has proved by a preponderance of the evidence that claims 1–23 of the '439 patent are unpatentable. 35 U.S.C. § 316(e).

Patent Owner moved to exclude certain evidence submitted by Petitioner. Paper 39 ("PO Mot. Exclude"). Petitioner opposed this motion. Paper 40 ("Pet. Opp. Mot. Exclude"). Patent Owner filed a Reply to Petitioner's Opposition to the Motion to Exclude. Paper 43 ("PO Reply Opp. Mot. Exclude"). We deny Patent Owner's motion as moot.

II. BACKGROUND

A. REAL PARTIES-IN-INTEREST

Petitioner identifies the Real Parties-in-Interest in this proceeding as "Innovex Downhole Solutions, Inc.; Intervale Capital, LLC; Intervale Capital Fund, L.P.; Intervale Capital Co-Investment Fund, L.P.; Intervale Capital Fund II, L.P.; Intervale Capital Fund II-A, L.P.; Intervale Capital

Co-Investment Fund II, L.P.; Intervale Capital Fund III, L.P.; Intervale Capital Co-Investment Fund III, L.P." Paper 28.

Patent Owner identifies the Real Parties-in-Interest in this proceeding as "Baker Hughes Oilfield Operations LLC; Baker Hughes, a GE Company, LLC; Baker Hughes, a GE Company; and General Electric Company." Paper 5.

B. RELATED MATTERS

Petitioner states that "[t]he outcome of this proceeding could affect or be affected by *Baker Hughes Oilfield Operations, LLC v. Innovex Downhole Solutions, Inc.*, No. 4:18-cv-2236 (S.D. Tex.) ("District Court Litigation"). In that case, Baker Hughes has asserted that Innovex infringes claims 1-23 of the '439 patent." Papers 22, 28 (citing Ex. 1011; Ex. 2002). Patent Owner identifies this same matter as related to this proceeding. Paper 5.

C. THE '439 PATENT

The '439 patent issued July 14, 2015, from US Application 13/549,659, which was filed July 16, 2012. Ex. 1003, codes (45), (21), (22). The '439 patent identifies its inventors as Edward J. O'Malley, Graeme M. Kelbie, YingQing Xu, James G. King, and Jimmie J. Holland. *Id.* at code (75). The '439 patent states that its invention is directed to

> [a] deformation system, including a deformable member and a tool operatively arranged to deform the member due to actuation of the tool from a first set of dimensions at which the deformable member is positionable with respect to a structure to a second set of dimensions at which the deformable member engages with the structure. The tool at least partially comprises a disintegrable material responsive to a selected fluid. A method of operating a deformation system is also included.

Id. at Abstract. Generally, such a system and method apply to the downhole drilling and completions industry, where "plug and perf" operations (hydraulic fracturing) are well known. *Id.* at 1:5–6.

Such a system is illustrated, in-part, by the '439 patent at its Figure 1, which is reproduced below:

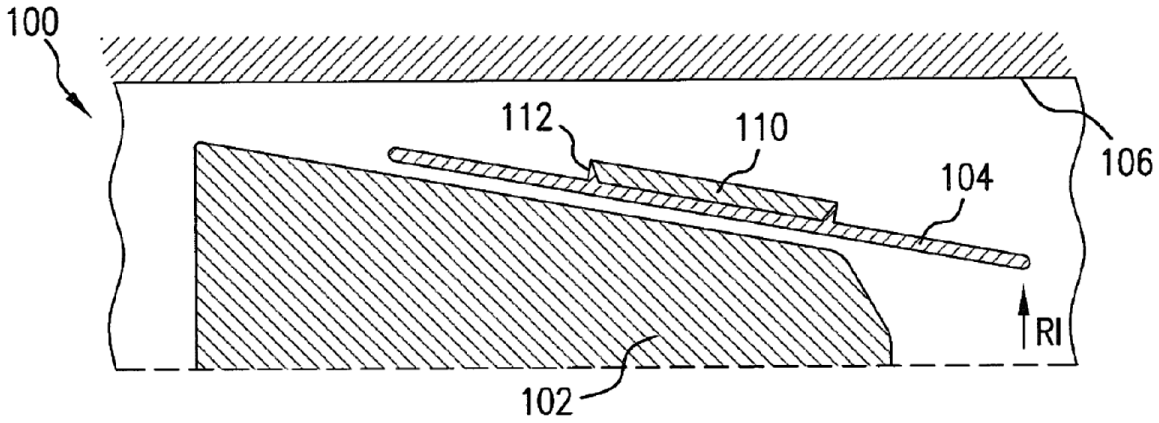

FIG. 1

Figure 1 "is a cross-sectional view of a system including a disintegrable tool engaging a deformable member." *Id.* at 1:43–44. Figure 1 shows part of a cross-section of a segment of borehole 106, within which is positioned deformable member (or, simply, member) 104, and within which is positioned deformation tool (or, simply, tool) 102. *Id.* at 2:10–45. Tool 102 and deformable member 104 are parts of a downhole expansion system 100. It is understood that Figure 1 shows possibly half, or only a small portion, of the cross-section of borehole 106 and system 100 because the '439 patent explains that deformable member 104 "is generally an annular or ring shaped" structure, and is such in the embodiment shown in Figure 1, but only part of such an annular/ring shape is shown. *Id.* at 2:14–15; *see also id.* at 2:18–23 (the deformable member is not limited to annular shapes, but can

be deformed in any direction and the illustration shows just one example). Tool 102, however, can "take any suitable form." *Id.* at 2:27–28.

The '439 patent describes that tool 102 is "for deforming the member 104 from a first set of dimensions to a second set of dimension[s]," for example, radially expanding or enlarging member 104. *Id.* at 2:11–17. The '439 patent further describes that "the tool 102 could be any suitable setting tool or take any suitable form, e.g., a wedge, swage, shoulder, cone, ramp, mandrel, etc., orientated in any direction, i.e., corresponding to the desired direction of deformation of the member 104." *Id.* at 2:23–30. The '439 patent describes that the tool can be a plug or a dart, that the tool can be dropped or pumped downhole, or sent downhole disposed on or with a string.[1] The '439 patent describes that the tool can be "arranged as a cone, wedge, swage, etc. for deforming the member [] against a structure []." *Id.* at 5:26–28.

The '439 patent describes that deformable member 104 can "optionally include[] various features to enable the member 104 to sealingly engage the structure 106." *Id.* at 3:34–36. For such a configuration, the '439 patent shows at Figure 1, above, that member 104 includes a sealing

---

[1] The '439 patent incorporates by reference US 6,352,112 ("Mills") for its disclosure of a tool disposed on a string. Ex. 1003, 2:37–40. Mills was not submitted as evidence in this proceeding, but is publicly available. Mills discloses swaging devices for changing the shape of deformed downhole junctions by passing a swage through a wellbore casing and forcing the swage through a deformed junction to reform the junction into an operational position. Mills, 1:30–36. Such a swage is disclosed by Mills as comprising a swage member including an annular base portion and a frustoconical annular cup element, provided with a support structure on a mandrel, such that the swage member reforms a deformed junction upon being passed therethrough. *Id.* at 2:48–3:14, 3:31–4:34, Figs. 1, 2, 4.

element 110, for example, elastomer, swellable material, foam, or any other known sealing element, and a gripping element 112, for example, slips, grit, texture, grooved surface, teeth, protrusions, etc. *Id*. at 3:36–46. The ’439 patent describes that the gripping element can be arranged to both anchor the member 104 and provide a sealing function, for example, a metal-to-metal seal. *Id*. at 3:46–50.

The ’439 patent describes that, in certain embodiments, tool 142 and deformable member 144 can be arranged so as to each be supported by a common member 148. *Id.* at 5:21–47. Such an embodiment is illustrated by Figure 11. A Panel-modified and annotated version of Figure 11 is reproduced below, which is modified to include a mirror image of the original figure to depict the second half of the system and reoriented to its vertical downhole orientation, and annotated with names of components as described in the ’439 patent.

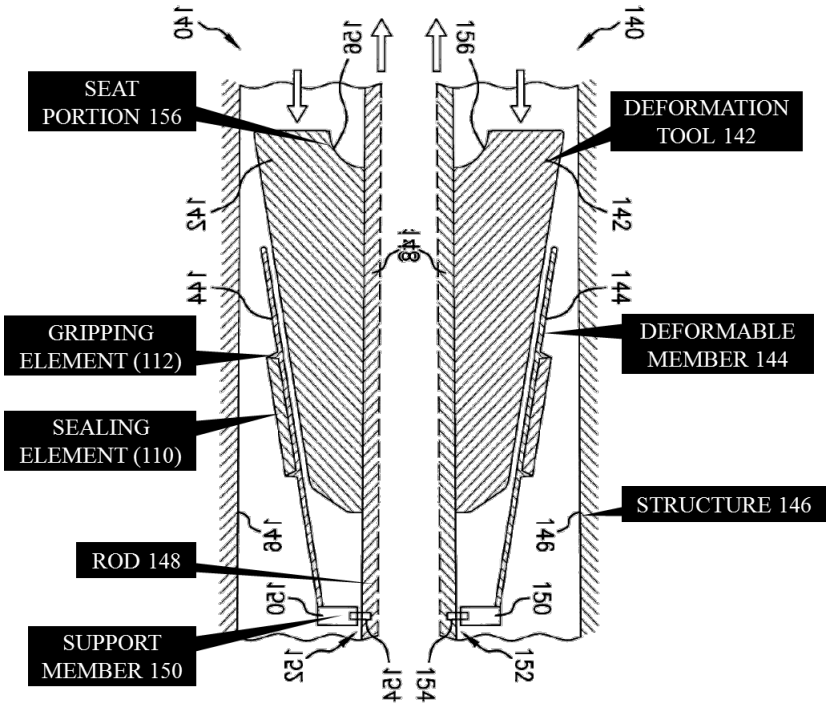

Figure 11 shows an annotated "cross-sectional view of a system according to yet another embodiment disclosed [in the '439 patent] in an initial configuration." *Id.* at 1:65–67. Figure 11 shows an embodiment very similar to that shown in Figure 1, above, in that "tool 142 [is] similarly arranged as a cone, wedge, swage, etc. for deforming the member 144 against a structure 146," but tool 142, as opposed to tool 102, includes an open area therethrough "so that a rod, pipe, or other member 148 can be inserted therethrough." *Id.* at 5:26–30. Member 148 has a support member 150 connected to deformable member 144; tool 142 and member 144 can move relative to one another. *Id.* at 5:30–34. The embodiment illustrated in Figure 11 also includes seat portion 156 in tool 142 so that it may receive a plug 158, such as a ball, upon removal of the rod/member 148. *Id.* at 5:43–47, Figs. 11, 12.

The '439 patent describes that "any mechanical deformation process, e.g., swaging, drawing, bending, compressing, stretching, etc., could be used to alter any desired dimension of the member 104 by actuation of the tool 102." *Id.* at 2:23–26. The '439 patent describes that the deformation of member 104 by tool 102 occurs when the tool is actuated by an actuator, "powered hydraulically, mechanically, electrically, magnetically, etc." *Id.* at 2:31–34.

The '439 patent describes that, advantageously, the deformation tools, e.g., tool 102, are made "at least partially from a disintegrable material that is responsive to a selected fluid, thereby avoiding the need for intervention to remove the tool." *Id.* at 2:59–64. According to the '439 patent, "'disintegrable' refers to a material or component that is consumable, corrodible, degradable, dissolvable, weakenable, or otherwise removable,"

and indicates that "disintegrate" "incorporates this stated meaning." *Id.* at 2:64–3:2. The selected fluids to which the disintegrable material is responsive are disclosed as being, for example, brine, water, oil, or any fluid delivered or pumped downhole for the purpose of disintegrating the tool, for example, solvents and acids. *Id.* at 3:2–6.

The '439 patent describes that the tool can be formed of "a metal composite that includes a metal matrix disposed in a cellular nanomatrix" so that disintegration rate, compressive strength, hardness, etc., can be tailored. *Id.* at 3:7–12. Disintegrable materials, such as Zn, Al, Mg, etc., are incorporated in the metal composites. *Id.* at 3:12–13. The '439 patent includes a photograph of such materials at its Figure 7, reproduced below:

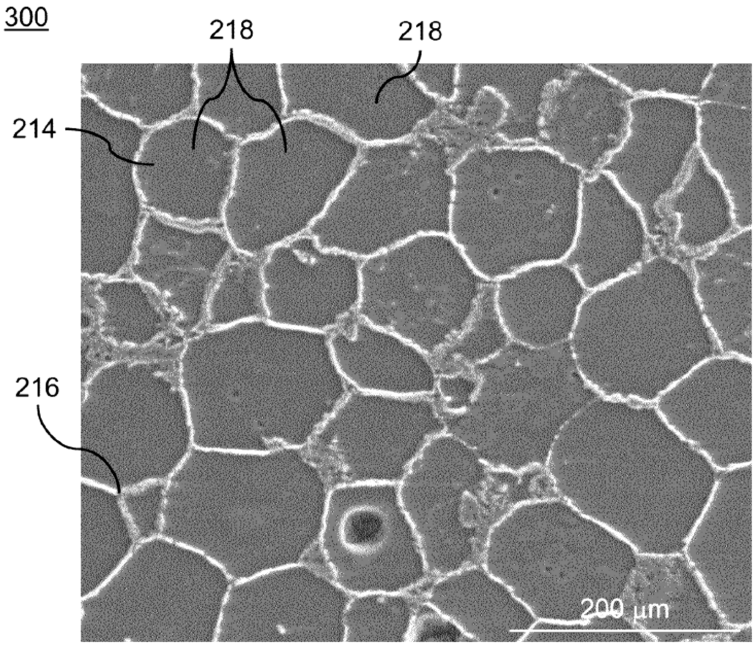

FIG.7

Figure 7, above, is "a photomicrograph of an exemplary embodiment of a metal composite [where] [t]he metal composite 300 has a metal matrix 214 that includes particles having a particle core material 218." *Id.* at 9:26–29.

The ’439 patent describes that “each particle of the metal matrix 214 is disposed in a cellular nanomatrix 216” and “the cellular nanomatrix 216 is shown as a white network that substantially surrounds the component particles of the metal matrix 214.” *Id.* at 9:29–33.

The ’439 patent concludes with 23 claims, of which claims 1, 13, 19, and 21 are independent. Claims 1 and 13 are illustrative and are reproduced below:

> 1. A deformation system, comprising:
>
> a deformable member having a first set of dimensions; and
>
> a tool within the deformable member having at least a portion thereof operatively arranged to impart a deforming force to the deformable member in order to deform the member from the first set of dimensions at which the deformable member is positionable with respect to a structure to a second set of dimensions at which the deformable member engages with the structure, wherein at least the portion of the tool that imparts the deforming force at least partially comprises a disintegrable material responsive to a selected fluid.
>
> 13. A deformation system, comprising:
>
> a deformable member having a first set of dimensions; and
>
> a tool having at least a portion thereof operatively arranged to impart a deforming force to the deformable member in order to deform the member from the first set of dimensions at which the deformable member is positionable with respect to a structure to a second set of dimensions at which the deformable member engages with the structure, wherein at least the portion of the tool that imparts the deforming force at least partially comprises a disintegrable material responsive to a selected fluid, and wherein the deformable member is arranged to seal against the structure after deformation of the member.

Id. at 16:14–25, 16:66–17:12. Independent claim 19 is substantially similar to independent claim 1, but claims a method of using a system as defined by

claim 1, whereas claim 1 is directed to the system itself. Independent claim 21 is substantially similar to independent claim 13, except again, where claim 13 is directed to a system, claim 21 is directed to a method of operating such a system. Claims 2–12 depend directly or indirectly from claim 1, claims 14–18 depend directly or indirectly from claim 13, claim 20 depends from claim 19, and claims 22 and 23 depend directly or indirectly from claim 21.

D. PETITIONER'S ASSERTED GROUNDS

Petitioner asserts eight grounds for unpatentability, under 35 U.S.C. § 102(b) and 35 U.S.C. § 103(a), as set forth below.[2] Pet. 5, 29–84.

Grounds	Claims Challenged	35 U.S.C. §	Basis
1	1, 7–23	102(b)	Head[3]
2	1, 7–23	102(b)	Starr[4]
3	1–23	103(a)	Head, Xu[5]
4	1–23	103(a)	Head, Holmes[6]
5	1–23	103(a)	Starr, Xu
6	1–23	103(a)	Starr, Holmes
7	1–23	103(a)	Stout[7], Xu
8	1–23	103(a)	Stout, Holmes

[2] The Leahy-Smith America Invents Act ("AIA"), Pub. L. No. 112-29, 125 Stat. 284, 287–88 (2011), amended 35 U.S.C. § 103. Because the'439 patent has a filing date before March 16, 2013, the effective date of the relevant amendment, the pre-AIA version of § 103 applies.
[3] US 5,709,269 (issued Jan. 20, 1998). Ex. 1005 ("Head").
[4] US 7,168,494 B2 (issued Jan. 30, 2007). Ex. 1007 ("Starr").
[5] US 2011/0132143 A1 (published June 9, 2011). Ex. 1008 ("Xu").
[6] US 2010/0294510 A1 (published Nov. 25, 2010). Ex. 1010 ("Holmes").
[7] US 2010/0139911 A1 (published June 10, 2010). Ex. 1009 ("Stout").

Although the Petition groups the above-identified Grounds 3–8 under a single obviousness ground, the Petitioner fashions such a ground in the alternative with respect to the prior art combinations asserted. Therefore, we understand six distinct obviousness grounds to have been presented. In support for the above-identified grounds for unpatentability, Petitioner submitted, *inter alia*, the Declaration of John Rodgers, Ph.D., P.E. Ex. 1001 ("Rodgers Declaration"). We discuss Petitioner's cited prior art references below.

E. HEAD

Head issued on January 20, 1998, from US Application 568,009, filed December 6, 1995. Ex. 1005, codes (45), (21), (22). Head identifies its inventor as Philip Head. *Id.* at code (76). Head discloses that its

> invention relates to an [*sic*] releasable grip arrangement providing an impermeable barrier in an annular space between an inside tube and an outside tube of an oil well and is made of a material which may be dissolved by a suitable solvent and includes a seal member and a locking member 3, a sleeve which comprises holes which can be blocked during normal use but can be opened to permit the entrance of a solvent.

Id. at Abstract. Head discloses that this releasable grip arrangement provides an "annular seal arrangement" such that "a differential pressure can be maintained between one side of the releasable grip arrangement and the other in the longitudinal direction" and "[t]he annular seal arrangement may include at least one seal member and at least one locking member," where "[t]he entire grip arrangement may be made from a material which is dissolvable by a solvent such as magnesium." *Id.* at 1:65–2:11.

Panel-annotated versions of Head's Figures 1 and 2 illustrate a dissolvable grip/seal arrangement for use in oil and gas wells; they are reproduced, as annotated, below:[8]

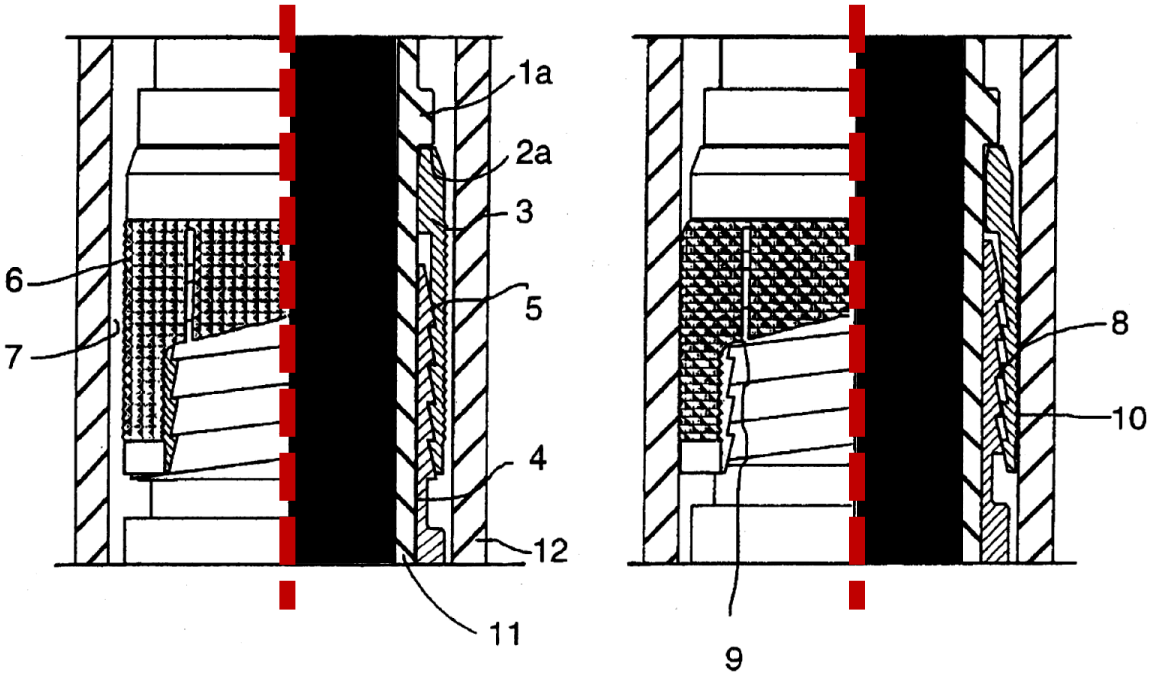

Fig 1 Fig 2

Figures 1 and 2 show "a longitudinal cross section of the locking members of the releasable grip arrangement of the invention," respectively, "not engaged" and "in the engaged condition." *Id.* at 3:12–17. Figure 1 shows a releasable grip arrangement having locking members 3, 4, which may be

[8] Because Head's Figures 1 and 2 are potentially difficult to interpret, we annotate them to add a red dashed-line to each to better distinguish the drawings' interior view of the casing/annular space showing a side-view of the releasable grip components (each figure's left portion), and the drawings' interior, cross-sectioned view of the components of the releasable grip arrangement (each figure's right portion). Also added are blacked-out regions, which illustrate vacant space within the annular structure, to provide additional visual separation between the two interior views of each drawing.

made of a material that can be dissolved by a solvent, and are provided on a mandrel 1a. *Id.* at 3:45–57. Figure 1 shows that locking part 4 is provided inside locking part 3 and engages therewith via a series of ramped threads. Figure 2 shows that locking part 4 has moved (for example, by hydraulic engagement) upward respective of locking part 3 and has forced the displacement of locking part 3 outward to be engaged against borehole casing 7. *Id.* at 3:45–4:61, Figs. 1–5.

Head discloses that "locking parts 3 and 4 [] are screwed together on a very course ramp type thread 5" and that this "method [is] employed to deploy and engage the gripping surface 6 of the locking part 3 against the internal casing surface 7" of the well. *Id.* at 3:57–61. Head discloses that locking part 3 has a gripping surface 6 having a very course knurled surface 10 that engages casing 7 to anchor the device. *Id.* at 3:64–4:5. Head calls this a "seal arrangement." *Id.* at 4:6–9. Head also discloses a "metal-to-metal seal assembly," which is adjacent the locking parts 3, 4 and also includes deformable and dissolvable components (seal support 20, seal component 21, seal member 2). *Id.* at 4:18–54, Figs. 3, 4.

Head discloses dissolvable materials such as magnesium and titanium for use in its seal arrangement. *Id.* at 2:9–11, 4:33–35, 4:48–51. Where titanium is selected as the dissolvable material, Head discloses hydrofluoric acid as the related solvent. *Id.* at 4:50–51, 5:35–40.

F. Starr

Starr issued on January 30, 2007, from US Application 10/803,662, which was filed March 18, 2004. Ex. 1007, codes (45), (21), (22). Starr identifies its inventors to be Philip M. Starr, Loren C. Swor, and Don S. Folds. *Id.* at code (75). Starr discloses its invention as follows:

> A disposable downhole tool comprises a material that dissolves when exposed to a chemical solution, an ultraviolet light, a nuclear source, or a combination thereof. In an embodiment, the material comprises an epoxy resin, a fiberglass, or a combination thereof. In another embodiment, the material comprises a fiberglass and a binding agent. The material may also be customized to achieve a desired dissolution rate of the tool. In an embodiment, the disposable downhole tool further comprises an enclosure for storing the chemical solution. The tool may also comprise an activation mechanism for releasing the chemical solution from the enclosure. In an embodiment, the disposable downhole tool is a frac plug. In another embodiment, the tool is a bridge plug. In yet another embodiment, the tool is a packer.

Id. at Abstract. Such a "disposable downhole tool" is illustrated at Starr's Figure 2, reproduced below:

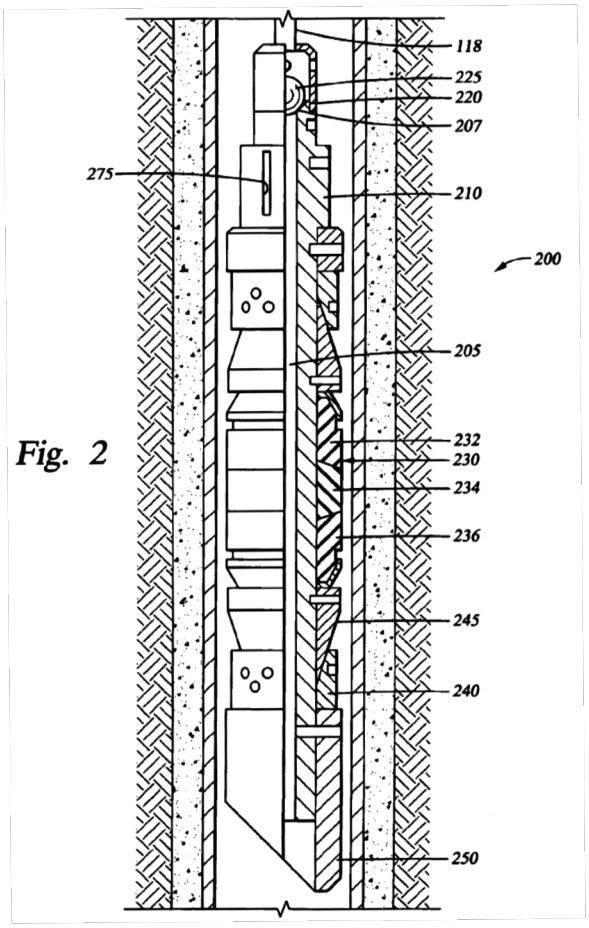

Fig. 2

"FIG. 2 is an enlarged side view, partially in cross section, of an embodiment of a dissolvable downhole tool comprising a frac plug being lowered into a wellbore." *Id.* at 2:49–51. Figure 2 shows dissolvable frac plug 200 in a wellbore. *Id.* at 3:36–41. Plug 200 has packer element assembly 230 with sealing elements 232, 234, 236 around body member 210. *Id.* at 3:48–51. Plug 200 also includes one or more slips 240 around body member 210, which are "guided by a mechanical slip body 245." *Id.* at 3:51–54. Starr discloses that "the packer element assembly 230 is set against the casing 125 in a conventional manner," but does not specify the "conventional manner" or any steps thereof. *Id.* at 4:45–49.

Starr discloses that "[a]t least some of the components comprising the frac plug 200 are formed from materials that dissolve when exposed to a chemical solution, an ultraviolet light, a nuclear source, or a combination thereof. These components may be formed of any dissolvable material that is suitable for service in a downhole environment and that provides adequate strength and proper operation of the plug 200." *Id.* at 3:61–67. Starr does not specify which components are dissolvable. Starr discloses that "by exposing the frac plug 200 to a chemical Solution, an ultraviolet light, a nuclear Source, or a combination thereof, at least some of its components will dissolve, causing the frac plug 200 to release from the casing 125, and the undissolved components of the plug 200 to fall to the bottom of the wellbore 120." *Id.* at 5:20–26.

G. Stout

Stout published on June 10, 2010, from US Application 12/653,155, which was filed on December 9, 2009. Ex. 1009, codes (43), (21), (22).

Stout identifies its inventor as Greg W. Stout. *Id.* at code (76). Stout indicates its invention is directed to

> A subterranean well tool is provided for sealing along a section of a wall of the well and is carried on a conduit into the well. The tool is designed to be comparatively short in length to afford easier mill or drill out subsequent to the tool's useful need in the well. A plurality of anchoring elements and seal means are provided for respective anchoring and sealing engagement along the wall of the well in concert and substantially concurrently with one another when the tool is shifted to the set position. The anchoring means are sandwiched in between first and second, or upper and lower, sets of seal means.

Id. at Abstract. Such a well tool is illustrated by Stout at Figures 1 and 2, which are reproduced side-by-side below:

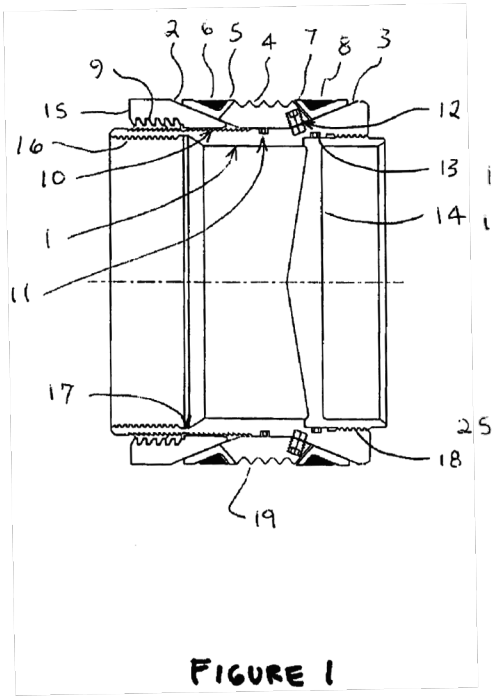

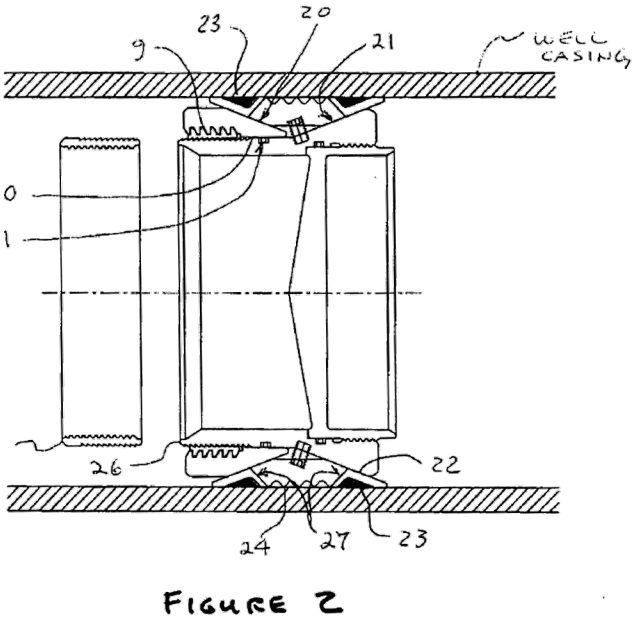

"FIG. 1 is a schematic view of the present invention in the 'running position'" and "FIG. 2 is a schematic view of the present invention in the 'set position'." *Id.* ¶¶ 22, 23.

Figure 1 shows mandrel 1 having a millable, frangible, or disintegrable disk 14 and cone surface 3, and supporting upper cone 2, where these two cones have inclined surfaces (20, 21 of Fig. 2) opposing one another to form a recess therebetween. *Id.* ¶¶ 30–34. Figure 1 further shows that mandrel 1 also supports seal 11 on its outer diameter and within the recess between the cones 2, 3. *Id.* ¶ 30. The seal 11 includes deformable seals 5, 6, 7, 8, and slip segments 4 therebetween and "positioned almost 360 degrees around the [outer diameter] of the mandrel 1." *Id.* ¶ 31. Gaps between any of these parts are minimized. *Id.* Lock pin 12 holds these components in place. *Id.*

Upper cone 2 has an internal thread that engages a body lock ring 9, which ratchets freely toward the slip segments 4, but prevents movement away from slip segments 4 by engaging the threads. *Id.* ¶ 33. A setting tool (not shown) pushes the upper cone 2 at its surface 15 and pulls on mandrel 1's thread 16, thereby closing the volume of the recessed area between cones 2, 3 and expanding the slip segments 4 and deformable seals 5, 6, 7, 8 to contact an internal diameter of the well casing, as shown in Figure 2. *Id.* ¶ 34.

H. XU

Xu was published on June 9, 2011, from US Application 12/633,682, which was filed on December 8, 2009. Ex. 1008, codes (43), (21), (22). Xu identifies its inventors to be Zhiyue Xu and Gaurav Agrawal. *Id.* at code (76). Xu discloses that its invention is directed to

> A powder metal compact . . . . The powder metal compact includes a substantially-continuous, cellular nanomatrix comprising a nanomatrix material. The compact also includes a plurality of dispersed particles comprising a particle core material that comprises Mg, Al, Zn or Mn, or a combination thereof, dispersed in the nanomatrix and a solidstate bond layer extending throughout the nanomatrix between the dispersed particles. The nanomatrix powder metal compacts are uniquely lightweight, high-strength materials that also provide uniquely selectable and controllable corrosion properties, including very rapid corrosion rates, useful for making a wide variety of degradable or disposable articles, including various downhole tools and components.

Id. at Abstract.

Xu discloses that "[i]n order to eliminate the need for milling or drilling operations, the removal of components or tools by dissolution of degradable polylactic polymers using various wellbore fluids has been proposed" and "the development of materials that can be used to form wellbore components and tools having the mechanical properties necessary to perform their intended function and then [be] removed from the wellbore by controlled dissolution using wellbore fluids is very desirable." *Id.* ¶¶ 10, 12.

Xu discloses that a "powder metal compact includes a substantially-continuous, cellular nanomatrix comprising a nanomatrix material" and "a plurality of dispersed particles comprising a particle core material that comprises Mg, Al, Zn or Mn, or a combination thereof, dispersed in the nanomatrix and a solid-state bond layer extending throughout the nanomatrix between the dispersed particles." *Id.* ¶13. Xu discloses that these are "lightweight, high-strength and selectably and controllably degradable materials" that are "made from coated metallic powders" and

"dispersed within a cellular nanomatrix form from the various nanoscale metallic coating layers of metallic coating materials, and are particularly useful in wellbore applications." *Id.* ¶ 41.

Xu provides several photographs of a powder metal compact material, including at Figure 9, reproduced below:

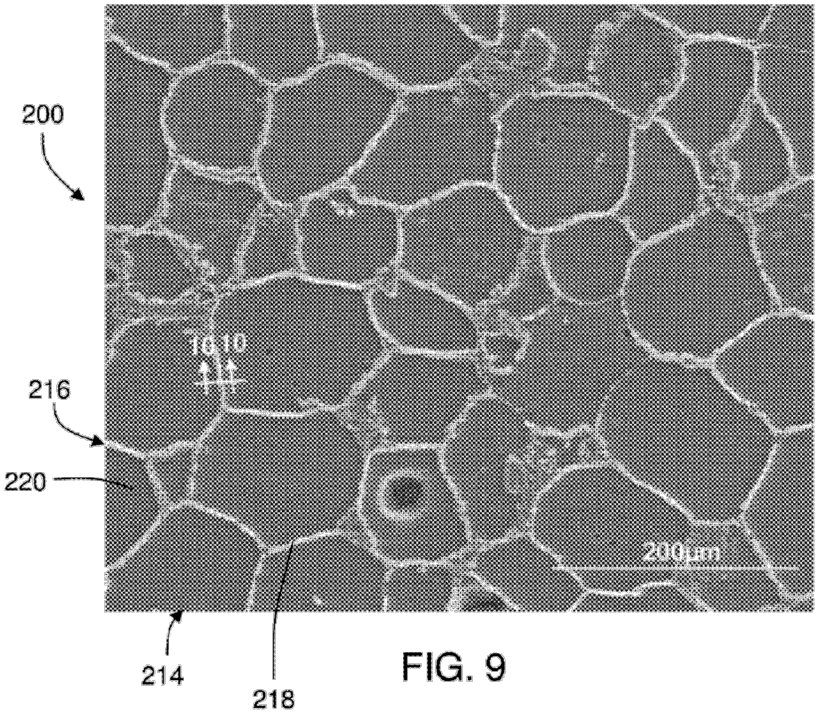

FIG. 9

"FIG. 9 is a photomicrograph of an exemplary embodiment of a powder compact as disclosed" in Xu's Specification. *Id.* ¶ 24. Xu discloses that

> [Figure] 9 [shows] particle core 14 and core material 18 and metallic coating layer 16 and coating material 20 may be selected to provide powder particles 12 and a powder 10 that is configured for compaction and sintering to provide a powder compact 200 that is lightweight (i.e., having a relatively low density), high-strength and is selectably and controllably removable from a wellbore in response to a change in a wellbore property, including being selectably and controllably dissolvable in an appropriate wellbore fluid.

Id. ¶ 63. Xu further discloses that "[p]owder compact 200 includes a substantially-continuous, cellular nanomatrix 216 of a nanomatrix material 220 having a plurality of dispersed particles 214 dispersed throughout the cellular nanomatrix 216." *Id.*

Xu discloses that "[e]ach of the metallic, coated powder particles 12 of powder 10 includes a particle core 14 and a metallic coating layer 16 disposed on the particle core 14." *Id.* at ¶ 43. Xu discloses that the core materials can be Mg, Al, Mn, or Zn, or combinations thereof, or ceramics, composites, glasses, or carbon, or combinations thereof, because they are very reactive with common wellbore fluids, such as ionic fluids or highly polar fluids, such as those that contain various chlorides. *Id.* Xu discloses providing different core and coating materials to provide different dissolution rates for selectable and controllable dissolution. *Id.* ¶ 52.

I. HOLMES

Holmes was published on November 25, 2010, from US Application 12/469,108, which was filed May 20, 2009. Ex. 1010, codes (43), (21), (22). Holmes identifies its inventor to be Kevin C. Holmes. *Id.* at code (75). Holmes discloses its invention to be directed to

> a dissolvable downhole tool. The tool includes, a dissolvable body constructed of at least two materials and at least one of the at least two materials is a reactive material, and a first material of the at least two materials being configured to substantially dissolve the dissolvable body and a second material configured to control reaction timing of the first material.

Id. at Abstract. Holmes also discloses "a method of making a dissolvable downhole tool. The method includes, encasing particulates of a first reactive material with a second reactive material." *Id.* ¶ 4. Holmes also discloses "constructing a core of the dissolvable downhole tool with a first reactive

material, and coating the core with a second reactive material, the second reactive material being significantly less reactive than the first reactive material." *Id.* ¶ 5.

Holmes discloses that such dissolvable downhole tools can be, for example, a tripping ball, ball seats, cement shoes, as well as other tools whose continued downhole presence may become undesirable. *Id.* ¶ 13. Holmes discloses that the reactive materials for such tools can be, for example, magnesium, aluminum, tin, tungsten, nickel, carbon steel, stainless steel, and combinations thereof, selected based on being reactive to environmental and conditional reactants, such as typical wellbore fluids, oil, water, mud, and natural gas. *Id.* ¶ 14.

One example of a dissolvable downhole tool disclosed by Holmes is a tripping ball having an inner portion made of a first reactive material and a shell of a second reactive material encasing the inner portion. *Id.* ¶ 21. Holmes illustrates such a tool at its Figure 5, which is reproduced below:

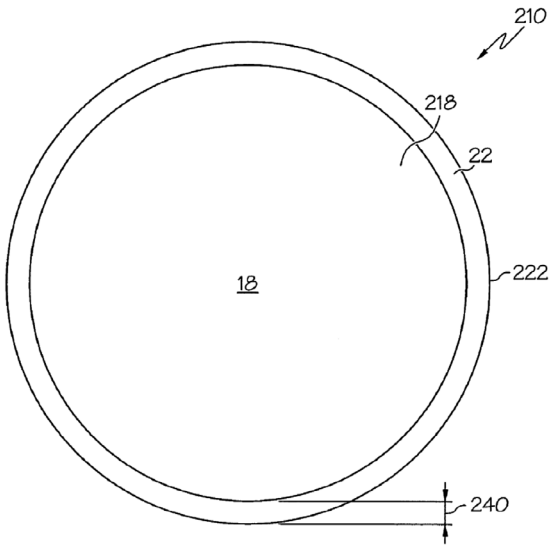

FIG. 5

"FIG. 5 depicts a cross-sectional view of an alternate embodiment of a dissolvable downhole tool disclosed [in Holmes]." *Id.* ¶ 11. Figure 5 shows downhole tool 210 (a tripping ball) having an inner portion 218 made of a first reactive material 18, and a shell 222 made of a second reactive material 22, which sealingly encases the inner portion 218. *Id.* ¶ 21. Holmes discloses the shell reacts with the downhole environment and degrades to expose the inner material, which reacts with the downhole environment and, thereby, the tool dissolves. *Id.*

III. DISCUSSION

A. ORDINARY LEVEL OF SKILL IN THE ART

Petitioner asserts that

> A person of ordinary skill in the art as of July 2012 would have had a Bachelor's degree in Mechanical Engineering or Petroleum Engineering, as well as at least five years of experience manufacturing or designing packers or plugs. Additional education or experience in related fields could compensate for deficits in the above qualifications.

Pet. 18; *see also* Ex. 1001 ¶¶ 83–84.

Patent Owner neither expressly advocates for a definition of the ordinary level of skill in the art nor contests Petitioner's proposed definition thereof. *See generally* PO Resp.; PO Sur-Reply. Patent Owner, however, submitted a Declaration of William W. Fleckenstein, Ph.D., PE, which states that "a POSITA [person of ordinary skill in the art] in the relevant art would have a bachelor's or master's degree in petroleum, mechanical, or chemical engineering, with at least 2-3 years of experience designing and/or operating downhole tools such as packers and bridge plugs." Ex. 2010 ¶ 11 ("Fleckenstein Declaration").

Petitioner also does not expressly argue that Dr. Fleckenstein is incorrect or that his opinions based on his definition of the skilled artisan are incorrect due to the ordinary level of skill that he presumed. *See generally* Pet. Reply.

Based on our consideration of the parties' largely consistent definitions of the ordinarily skilled artisan, we adopt the following definition of a person of ordinary skill in the art for this proceeding:

> a person of ordinary skill in the art as of July 16, 2012, would have had a bachelor's degree in petroleum, mechanical, or chemical engineering, as well as at least 5 years of experience manufacturing, designing, and/or operating downhole tools such as packers or plugs; or, alternatively, a master's degree in petroleum, mechanical, or chemical engineering and 2–3 years' experience manufacturing, designing, and/or operating downhole tools such as packers and bridge plugs. Additional education or experience in related fields could compensate for deficits in these qualifications.

This definition of the skilled artisan is consistent with the level of skill in the art reflected in the prior art of record. *See Okajima v. Bourdeau*, 261 F.3d 1350, 1355 (Fed. Cir. 2001) ("the prior art itself [may] reflect[] an appropriate level" as evidence of the ordinary level of skill in the art) (quoting *Litton Indus. Prods., Inc. v. Solid State Sys. Corp.*, 755 F.2d 158, 163 (Fed. Cir. 1985)).

B. CLAIM CONSTRUCTION

Based on the filing date of the Petition, the Board interprets claim terms in an unexpired patent according to the broadest reasonable construction in light of the specification of the patent in which they appear. 37 C.F.R. § 42.100(b) (2018); *Cuozzo Speed Techs. v. Lee*, 136 S. Ct. 2131,

2142–46 (2016).[9] Under this standard, and absent any special definitions, we generally give claim terms their ordinary and customary meaning, as would be understood by one of ordinary skill in the art in the context of the entire patent disclosure. *In re Translogic Tech., Inc.*, 504 F.3d 1249, 1257 (Fed. Cir. 2007). Any special definitions for claim terms must be set forth with reasonable clarity, deliberateness, and precision. *See In re Paulsen*, 30 F.3d 1475, 1480 (Fed. Cir. 1994). In the absence of such a definition, limitations are not to be read from the specification into the claims. *See In re Van Geuns*, 988 F.2d 1181, 1184 (Fed. Cir. 1993).

Should claim terms require construction, sources for claim interpretation include "the words of the claims themselves, the remainder of the specification, the prosecution history [i.e., the intrinsic evidence], and extrinsic evidence concerning relevant scientific principles, the meaning of technical terms, and the state of the art." *Phillips v. AWH Corp.*, 415 F.3d 1303, 1314 (Fed. Cir. 2005) (en banc). "[T]he claims themselves [may] provide substantial guidance as to the meaning of particular claim terms." *Id.* However, the claims "do not stand alone," but are part of "'a fully integrated written instrument,' consisting principally of a specification that concludes with the claims," and, therefore, the claims are "read in view of

[9] On October 11, 2018, the USPTO revised its rules to harmonize the Board's claim construction standard with that used in federal district court. Changes to the Claim Construction Standard for Interpreting Claims in Trial Proceedings Before the Patent Trial and Appeal Board, 83 Fed. Reg. 51,340 (Oct. 11, 2018)) (to be codified at 37 C.F.R. pt. 42). This rule change, however, applies to petitions filed on or after November 13, 2018, and therefore does not apply to this proceeding because the Petition was filed November 1, 2018. *Id.*

the specification." *Id.* at 1315 (quoting *Markman v. Westview Instruments, Inc.*, 52 F.3d 967, 978–79 (Fed. Cir. 1995)).

We analyze the parties' positions on claim interpretation in view of these standards of law.

Petitioner asserts that the claim terms *deform*, *tool*, and *disintegrable material* require construction. Pet. 5–8. Patent Owner asserts that the claim terms *seal against* and *seal element* require construction. PO Resp. 31–34. Except as set forth below, no claim terms require express construction. *See Nidec Motor Corp. v. Zhongshan Broad Ocean Motor Co. Matal*, 868 F.3d 1013, 1017 (Fed. Cir. 2017) (noting that "we need only construe terms 'that are in controversy, and only to the extent necessary to resolve the controversy'") (citing *Vivid Techs., Inc. v. Am. Sci. & Eng'g, Inc.*, 200 F.3d 795, 803 (Fed. Cir. 1999)).

DEFORM

The claim term *deform*, not considering claim preambles, is recited in some variation by claims 1, 10–15, and 17–21. Ex. 1003, 16:14–18:28.

Petitioner's Position

Petitioner asserts *deform* means "change shape, dimension, or position upon application of a mechanical force." Pet. 5–6.

Patent Owner's Position

Patent Owner presents no argument for the claim term *deform* in its Response and only generally indicates that it "does not agree with the other [other than for "tool"] constructions proposed in the Petition." *See generally* PO Resp.

Analysis

We do not adopt Petitioner's proposed construction (and Patent Owner offers none), but instead, based on the information presented, assign the claim term *deform* its plain and ordinary meaning, i.e., *alter any dimension*. The claims and Specification of the '439 patent use the term *deform*, or variants thereof (e.g., deformable, deformation), according to the term's ordinary meaning. For example, the Specification states that "any mechanical deformation process, e.g., swaging, drawing, bending, compressing, stretching, etc., could be used to *alter any desired dimension* of the member 104 by actuation of the tool 102," and "deforming the deformable member with the tool." Ex. 1003, 2:23–26 (emphasis added), 18:6 (claim 19). Adopting Petitioner's proposed definition of *deform* would add unnecessary and undesirable redundancy to the claims.

TOOL

The claim term *tool* is recited by claims 1, 4, 7, 8, 10, 13, 15, 16, 19, 21, and 22. Ex. 1003, 16:14–18:31.

Petitioner's Position

Petitioner asserts that the claim term *tool* should be construed as a means-plus-function limitation under 35 U.S.C. § 112, paragraph 6, where the recited function is *imparting a deforming force on the deformable member*, and the Specification's disclosed corresponding structure is *a wedge, swage, shoulder, cone, ramp, mandrel* as exemplified by the '439 patent's tools 102, 122, and 142. Pet. 6–7 (citing Ex. 1003, 2:10–18, 2:26–30, 5:4–5, 5:21–30, Fig. 1; Ex. 1001 ¶ 92; Ex. 1056). Petitioner expands on this argument in its Reply, arguing that the '439 patent describes the claimed *tool* broadly as any suitable tool, taking any suitable form, for

example a wedge, swage, shoulder, cone, ramp, mandrel, etc., oriented in any direction, and arguing that the claims do not convey any structure for the recited *tool* (other than it be positioned inside the deformable member or have a ratcheting/locking feature). Pet. Reply 3. Petitioner, however, adopts one position advanced by Patent Owner (*see* PO Resp. 17–18), that "a tool is a '*device* that achieves a specific function,'" and argues this indicates the claim term *tool* is a generic term, not connoting sufficiently definite structure to be interpreted other than under § 112(6). Pet. Reply 3–4 (citing *Massachusetts Inst. of Tech. & Elecs. for Imaging, Inc. v. Abacus Software*, 462 F.3d 1344, 1354 (Fed. Cir. 2006)). Petitioner asserts that *tool*, as it is used in the '439 patent's claims, is distinguishable from the term *downhole tool* used in the relevant industry to refer to a category of devices and has a broader meaning as illustrated by its use in the '439 patent. *Id.* at 9 (citing Ex. 2011, 151:13–152:12; Ex. 1001 ¶ 97).

Patent Owner's Position

Patent Owner disagrees with Petitioner and asserts that *tool* has a well-understood meaning in the art and that applying a means-plus-function interpretation to the term, as asserted by Petitioner, would impermissibly broaden the meaning of the term. PO Resp. 14–15. Patent Owner asserts that *tool* would have been understood by the skilled artisan "as the name for a class of structures, precluding [means-plus-function] construction." *Id.* at 17. Patent Owner asserts that the '439 patent identifies three exemplary, well-known tools within such a class—a plug, a dart, and a setting tool—and that the '439 patent thereby limited the universe of relevant downhole tools of the invention to those tools. *Id.* (citing Ex. 1003, 2:26–30, 2:34–37; Ex. 2010 ¶¶ 31–39). Patent Owner asserts that *tool* would have been

"understood in the oilfield services art as referring to *a downhole device that achieves a specific function*" and "[s]uch devices include packers, bridge plugs, setting tools, droppable darts, tripping balls, ball seats, and *a number of others*." *Id.* at 17–18 (emphasis added) (citing Ex. 2010 ¶¶ 34–38; Ex. 1001 ¶ 92); *see also id.* at 20–21 ("The challenged claims use 'tool' in this same, ordinary way: to refer to downhole devices that achieve a specific function. EX2010, ¶¶40-51"). Patent Owner argues that "'tool' is not somehow stripped of its status as a tool by being a component of a larger tool." *Id.* at 23 (citing Ex. 2010 ¶ 47; Ex. 2011, 86:18–87:20).

Patent Owner also asserts that Petitioner cannot overcome the legal presumption that because the claims do not use the term *means* the limitation is presumed not to be a means-plus-function limitation. PO Resp. 16–17 (citing *Williamson v. Citrix Online, LLC*, 792 F.3d 1339, 1349 (Fed. Cir. 2015)); *see also id.* at 26–31. Patent Owner further asserts that the claims recite sufficient structure so that a means-plus-function interpretation of *tool* would be inappropriate, arguing that the word "tool" is itself sufficient structure, that the *tool* is recited by the claims to be arranged to impart a deforming force on the deformable member, and that the *tool* has a ratcheting/locking feature. *Id.* at 24–25 (citing Ex. 2010 ¶ 33; Ex. 1003, 2:10–45).

Petitioner's and Patent Owner's arguments similarly extend into and dominate their respective Reply and Sur-Reply. *See* Pet. Reply 3–14; PO Sur-Reply 1–16. Notably, Petitioner asserts that Patent Owner, for all its argument on the term *tool*, "offers no 'ordinary' definition. Nor does [Patent Owner] identify all the members of that allegedly 'finite class.'" Pet. Reply 4. Patent Owner's final say on the term *tool* was that "[n]o

construction of 'tool' is necessary because both experts agree that the prior art structures identified in the Petition are ***not*** tools under the ordinary meaning of the term." PO Sur-Reply 1.

Analysis

We conclude the claim term *tool* invokes a means-plus-function construction. 35 U.S.C. § 112(6) states:

> An element in a claim for a combination may be expressed as a means or step for performing a specified function without the recital of structure, material, or acts in support thereof, and such claim shall be construed to cover the corresponding structure, material, or acts described in the specification and equivalents thereof.

This provision allows patentees to craft a claim limitation by reciting a function to be performed rather than by reciting structure for performing that function, but, in exchange for such leeway in claim language, restricts the scope of coverage of such a limitation to only the structure, materials, or acts described in the specification as corresponding to the claimed function and equivalents thereof. *See Northrop Grumman Corp. v. Intel Corp.*, 325 F.3d 1346, 1350 (Fed. Cir. 2003).

A claim's use of the word "means" creates a rebuttable presumption that the respective limitation should be interpreted under § 112(6), and a claim's lack of the word "means" creates a rebuttable presumption that the statutory provision does not apply. *Williamson*, 792 F.3d at 1348. The presumption that a claim limitation that lacks the word "means" is not subject to § 112(6) is not a strong one and does not require any heightened evidentiary showing to overcome. *Id*. at 1349.

The essential inquiry is not merely the presence or absence of the word "means," but whether the words of the claim are understood by

persons of ordinary skill in the art to have a sufficiently definite meaning as the name for structure. *Id.* at 1348–49. Where a claim term is susceptible to only one reasonable interpretation, the court must construe the claim based on patentee's version of the claim that he himself drafted. *Process Control Corp. v. HydReclaim Corp.*, 190 F.3d 1350, 1356 (Fed. Cir. 1999) (interpreting claim language not to preserve validity, but as dictated by the patentee's use of the term). Sometimes such a single reasonable interpretation might be gleaned from the claim language as was the case in *Process Control*, sometimes a claim term might be well-understood to have an ordinary meaning in the art, and sometimes a patent's specification might clearly indicate the meaning of a claim term and it is well-settled that "a claim must be read in view of the specification of which it is a part." *Renishaw plc v. Marposs Societa per Azioni*, 158 F.3d 1243, 1248 (Fed. Cir. 1998).

Upon consideration of the record before us, the claim term *tool* is susceptible to only one interpretation. We agree with Petitioner that the claim term *tool* should be interpreted as a means-plus-function limitation. The independent claims recite no structural requirements for the *tool*, and when the claims are read in view of the Specification, it is clear that the claims' *tool* does not refer to, or at least is not limited to, the standard downhole devices argued by Patent Owner.

We first identify the claimed function for *tool*, which is *to impart a deforming force to the deformable member in order to deform the member from the first set of dimensions at which the deformable member is positionable with respect to a structure to a second set of dimensions at*

which the deformable member engages with the structure. *See, e.g.*, Ex. 1003, 16:16–22.

Having identified the function, we next determine the corresponding structure, or structures, for *tool*, described in the Specification of the ’439 patent, which are *any suitable setting tool, a wedge, a swage, a shoulder, a cone, a ramp, a mandrel, a plug, and a dart*, represented by elements 102, 102′, 122, and 142 in the ’439 patent’s figures. *Id.* at 2:23–30, 3:34–37, 5:26–30, Figs. 1, 2, 5, 10–12. Each of the structures of this group correspond to the claimed function, noted above, because the Specification expressly states that these structures are suitable to “alter any desired dimension of the member 104 by actuation of the tool 102.” *See id.* at 2:23–30.

Here, the ’439 patent’s Specification clearly indicates that the claim term *tool* can include, but is not limited to, downhole devices such as setting tools, plugs, or darts, which are potentially complex, multi-component devices, as argued by Patent Owner. However, the Specification indicates that a deformation tool can have *any* suitable form; thus, it could be a multi-component device like a setting tool or a plug, but it also could be a swage, a cone, or a ramp, which are simple structures that could be components of a more complex device. *See, e.g.*, Ex. 1003, 2:23–30, 5:21–47, Figs. 11, 12; *cf.* Hr’g Tr. 48:3–49:13 (Patent Owner takes the position that the Specification’s description of, e.g., a wedge, a cone, or a ramp, are merely examples of forms the tool structure can take, rather than things the tool can be; we are unpersuaded by this strained reading). Therefore, it is apparent that the claim term *tool*, when read in view of the Specification, conveys to the skilled artisan that the term *tool* must be interpreted under § 112(6), as it

has been above. Any presumption that the lack of the word "means" in the claim requires that the respective limitation is not a means-plus-function limitation is rebutted by the disclosure of the '439 patent itself, which indicates the claim term *tool* is used generically and that the Specification must be consulted to ascertain its structure.

It is worth noting Petitioner's evidence regarding Patent Owner's SPECTRE frac plug product and Patent Owner's litigation position in the related District Court Litigation (noted above) that "the SPECTRE™ frac plug and associated systems and methods practice claims 1, 4, 6-12, 19, and 20 of the '439 patent," which appears contradictory to some of Patent Owner's arguments here. *See* Ex. 1011, 3; Ex. 1001 ¶ 90; Ex. 1044, 1 ("the entire plug—including the plug body, anchoring grip, and packing element—completely disintegrates" and "[t]he body of the SPECTRE frac plug, including the mandrel and cone, is constructed of controlled electrolytic metallic (CEM) nanomaterial."); Ex. 1046; Ex. 1047, 3 ("The SPECTRE™ frac plug is the industry's first fully disintegrating plug").

Exhibit 1046 includes the following illustration of Patent Owner's SPECTRE product:

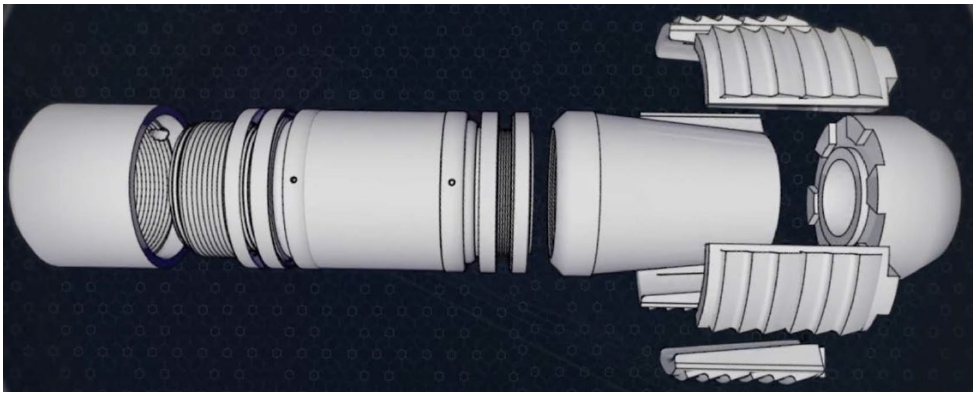

The image above shows an exploded view of a SPECTRE frac plug having many components, including slips surrounding a frustoconical cone member (respectively, the toothed components exploded around the device and the component inside them). *Compare* Ex. 1046 *with* Ex. 1003, Fig. 11 (reproduced above).

Such a product and Patent Owner's position in the related District Court Litigation that it is covered by the '439 patent's claims belies Patent Owner's claim construction position on *tool* here, and supports Petitioner's position, because SPECTRE's cone (a *deformation tool*, as claimed) and slips (a *deformable member*, as claimed) would be components of the greater downhole device that is the SPECTRE product. *See* Ex. 1067, 61:17–62:2, 63:13–20 (Dr. Fleckenstein deposition testimony regarding how SPECTRE works); *see also* Hr'g Tr. 75:6–12 (Patent Owner confirming that, in SPECTRE, the cone is a *tool* and the slips are a *deformable member*). If the SPECTRE device is a downhole tool, then both the claimed *deformation tool* (cone) and the *deformable member* (slips) thereof are mere component parts of that downhole tool, i.e., the downhole tool includes a *deformation tool*. *See, e.g.*, Hr'g Tr. 11:23–12:10. Patent Owner's inconsistent litigation position diminishes the persuasiveness of its argument to the contrary in this proceeding, that the claimed *tool* here cannot be a component of a larger multi-component device.

Even in view of the means-plus-function construction for *tool* set forth above, it is worth noting that, even were *tool* not interpreted as a means-plus-function limitation, when the claim term *tool* is read in the context of the claims and in view of the Specification of the '439 patent, as it must, *tool* has a breadth of scope necessarily including *any* suitable setting tool or

taking any suitable form for mechanically deforming the deformable member by altering any desired dimension of the deformable member, for specific examples, a wedge, a swage, a shoulder, a cone, a ramp, a mandrel, a plug, and/or a dart. *See* Ex. 1003, 2:23–30; *see also Vitronics Corp. v. Conceptronic, Inc.*, 90 F.3d 1576, 1582–83 (Fed. Cir. 1996) ("[T]he specification is always highly relevant to the claim construction analysis. Usually, it is dispositive; it is the single best guide to the meaning of a disputed term. . . . In most situations, an analysis of the intrinsic evidence alone will resolve any ambiguity in a disputed claim term. In such circumstances, it is improper to rely on extrinsic evidence."); *see also* Hr'g Tr. 8:4–12 (even if *tool* does not invoke means-plus-function interpretation, the claims are still invalid). Therefore, it would be improper to limit the meaning of the claim term *tool* to only a plug, a dart, or a setting tool, for example, as argued by Patent Owner, when the Specification so clearly indicates that it can be a variety of other forms. *See* Hr'g Tr. 10:17–11:6.

Even were we to adopt Patent Owner's proposed interpretation of the term *tool*, i.e., "a downhole device that achieves a specific function," which we do not, the '439 patent's Specification still demands that such a device include within its scope a wedge, a swage, a shoulder, a cone, a ramp, a mandrel, etc., as noted above. The scope of the term *tool*, when read in light of the Specification, would necessarily include the same structures we found to be corresponding structures under the means-plus-function interpretation above.

DISINTEGRABLE MATERIAL

The term *disintegrable material* is recited by claims 1, 2, 3, 13, 19, and 21. Ex. 1003, 16:14–18:28.

Petitioner's Position

Petitioner asserts that *disintegrable material* should be interpreted to mean *a material or component* ***intended in ordinary usage*** *to be consumable, corrodible, degradable, dissolvable, weakenable, or otherwise removable*, rather than "a material or component that is consumable, corrodible, degradable, dissolvable, weakenable, or otherwise removable," as stated in the '439 patent's Specification, because all materials are weakenable or removable in response to some fluid. Consequently, according to Petitioner, the Specification fails to apprise one of ordinary skill in the art of any reasonable definition of the claimed subject matter. Pet. 7–8 (citing Ex. 1001 ¶¶ 99–101; Ex. 1003, 2:64–66).

Patent Owner's Position

Patent Owner presents no argument over the claim term *disintegrable material* in its Response and only generally indicates that it "does not agree with the other [other than for "tool"] constructions proposed in the Petition." *See generally* PO Resp.

Analysis

We do not adopt Petitioner's proposed construction (and Patent Owner offers none), but instead, based on the information presented, assign the claim term *disintegrable material* its plain and ordinary meaning as would be understood from a reading of the plain language of the claims in view of the Specification, that is "a material or component that is consumable, corrodible, degradable, dissolvable, weakenable, or otherwise removable." Ex. 1003, 2:64–66.

SEAL AGAINST

The claim term *seal against*, or a variant thereof, is recited by claims 13, 18, and 21. *Id*. at 16:66–18:28.

Patent Owner's Position

Patent Owner asserts that *seal against* should be interpreted to mean *the formation of a seal by continuous engagement of the deformable member against a radially adjacent structure*. PO Resp. 31–33 (citing Ex. 2010 ¶¶ 52–58). Patent Owner argues that not just any engagement (between the claimed deformable member and adjacent structure) will do and, "[w]hile absolute impermeability is not required for seal formation or fluid isolation—with enough pressure, any downhole seal will leak—a POSITA would not consider non-continuous engagement leaving gaps to be a 'seal' or to 'seal against.'" *Id.* at 33. Patent Owner asserts that "the ordinary meaning of 'seal against' also includes continuous engagement." *Id*. at 32 (citing Ex. 2010 ¶¶ 55–58).

Petitioner's Position

Petitioner asserts that *seal against* does not require continuous engagement as argued by Patent Owner, but equates *seal against* to *press against*. Pet. Reply 14 (citing Ex. 1003 (claims 13, 18, 21)). Petitioner argues that Patent Owner's proposed construction imports limitations into the claims, which are otherwise separately recited by dependent claims, for example, by claim 16 (which indirectly depends from claim 13) where fluid isolation is recited to be an additional claim element achieved by the recited tool and a seal element of the deformable member. *Id*. at 14–15.

Analysis

We do not adopt either party's proposed construction. We conclude the portion of Patent Owner's proposed construction including *the formation of a seal* reflects the ordinary meaning of *seal against* as it would have been understood by a person of ordinary skill in the art. We also agree with Petitioner's position that *seal against* does not require continuous engagement against a radially adjacent structure. Based on the information presented, we assign the claim term *seal against* its plain and ordinary meaning as would be understood by a person of ordinary skill in the art from a reading of the plain language of the claims in view of the Specification. *See, e.g.*, Ex. 1003, 3:34–50 ("The member 104 in the illustrated embodiment optionally includes various features to enable the member 104 to sealingly engage the structure 106" and "provide a sealing function"), 12:52–53 and 13:18–19 (equating "a disintegrable anchoring system" with "e.g., a seal"). The Specification expressly indicates that the sealing function (called a "suitable seal" in the Specification) can be achieved via a metal-to-metal seal or via other materials, for example, elastomer. *Id.* at 3:34–50; 5:5–8, 5:25–26. Moreover, the concept of continuous engagement for zonal isolation, and that such engagement is against a radially adjacent structure, are addressed in dependent claims (for example, dependent claims 15, 16, 22, 23); therefore, such concepts are not necessarily a part of the independent claims which recite *seal against*. *See, e.g.*, Ex. 1003, 16:66–17:22 (compare claims 13–16); *see also* PO Resp. 33 ("absolute impermeability is not required for seal formation or fluid isolation").

Again, we assign the claim term *seal against* its plain and ordinary meaning as would be understood by a person of ordinary skill in the art.

SEAL ELEMENT

The term *seal element* is recited by claims 14 and 16. *Id*. at 17:13–14, 17:19–22.

Patent Owner's Position

Patent Owner asserts that *seal element* should be interpreted to mean *a structural feature capable of forming a seal by continuous engagement against the structure*. PO Resp. 33. Patent Owner argues that "[a] POSITA would recognize that 'fluid isolation' provided by 'sealing element 110' could only result from a seal formed by continuous engagement with the structure." *Id.* at 34 (citing Ex. 2010 ¶ 58).

Petitioner's Position

Petitioner's arguments against this claim construction are the same as those regarding *seal against*, discussed above. *See* Pet. Reply 14–16.

Analysis

The claims and Specification of the '439 patent use the term *seal element* according to the term's ordinary meaning, as explained in the Specification, and the Specification expressly indicates that the sealing function can be achieved via a metal-to-metal seal or via other materials, for example, elastomer. Ex. 1003, 3:34–50.

Although we agree with the portion of Patent Owner's proposed definition that *seal element* refers to *a structural feature capable of forming a seal*, we have already discussed above that the concept of *continuous engagement* is not a required part of defining a seal or the claim term *seal against*, and that analysis also applies here. *See, e.g.*, PO Resp. 33 ("absolute impermeability is not required for seal formation or fluid isolation"). Other than this *continuous engagement* concept, Patent Owner's

proposed construction of *seal element* reflects *seal element's* ordinary meaning as would have been understood by the person of ordinary skill in the art.

Based on the information presented, we assign the claim term *seal element* the plain and ordinary meaning as would be understood by a person of ordinary skill in the art from a reading of the plain language of the claims in view of the Specification.

C. APPLICABLE LEGAL STANDARDS

"In an IPR, the petitioner has the burden from the onset to show with particularity why the patent it challenges is unpatentable." *Harmonic Inc. v. Avid Tech., Inc.*, 815 F.3d 1356, 1363 (Fed. Cir. 2016) (citing 35 U.S.C. § 312(a)(3) (requiring *inter partes* review petitions to identify "with particularity . . . the evidence that supports the grounds for the challenge to each claim")). This burden of persuasion never shifts to Patent Owner. *See Dynamic Drinkware, LLC v. Nat'l Graphics, Inc.*, 800 F.3d 1375, 1378 (Fed. Cir. 2015) (discussing the burden of proof in *inter partes* review).

Regarding anticipation, our reviewing court has held:

> a patent is invalid [or unpatentable] as anticipated if "the [claimed] invention was described in" a patent or published application "before the invention by" the patentee. 35 U.S.C. § 102(e). In order to anticipate the claimed invention, a prior art reference must "disclose all elements of the claim within the four corners of the document," and it must "disclose those elements 'arranged as in the claim.'" *Net MoneyIN, Inc. v. VeriSign, Inc.*, 545 F.3d 1359, 1369 (Fed. Cir. 2008) (quoting *Connell v. Sears, Roebuck & Co.*, 722 F.2d 1542, 1548 (Fed. Cir. 1983)). "However, a reference can anticipate a claim even if it 'd[oes] not expressly spell out' all the limitations arranged or combined as in the claim, if a person of skill in the art, reading the reference, would 'at once envisage' the claimed arrangement or combination." *Kennametal*, 780 F.3d at 1381 (alteration in

> original) (quoting *In re Petering*, 301 F.2d 676, 681 (CCPA 1962)); *see also Blue Calypso, LLC v. Groupon, Inc.*, 815 F.3d 1331, 1344 (Fed. Cir. 2016) ("[A] reference may still anticipate if that reference teaches that the disclosed components or functionalities may be combined and one of skill in the art would be able to implement the combination." (citing *Kennametal*, 780 F.3d at 1383)).

Microsoft Corp. v. Biscotti, Inc., 878 F.3d 1052, 1068 (Fed. Cir. 2017); *see also Purdue Pharma L.P. v. Epic Pharma, LLC*, 811 F.3d 1345, 1358–59 (Fed. Cir. 2016) (distinct, but directly related disclosures of a reference may be combined in an optional, anticipating embodiment, e.g., a controlled-release pharmaceutical formulation specifically disclosed as an embodiment with claimed components *directly relates* to a disclosed list of therapeutic compounds useable therewith).

Regarding obviousness, the Supreme Court in *KSR International Co. v. Teleflex Inc.*, 550 U.S. 398 (2007), reaffirmed the framework for determining obviousness as set forth in *Graham v. John Deere Co*., 383 U.S. 1 (1966). The *KSR* Court summarized the four factual inquiries set forth in *Graham* (383 U.S. at 17–18) that are applied in determining whether a claim is unpatentable as obvious under 35 U.S.C. § 103(a) as follows:
(1) determining the scope and content of the prior art; (2) ascertaining the differences between the prior art and the claims at issue; (3) resolving the level of ordinary skill in the pertinent art; and (4) considering objective evidence indicating obviousness or non-obviousness. *KSR*, 550 U.S. at 406.

"The combination of familiar elements according to known methods is likely to be obvious when it does no more than yield predictable results." *Id.* at 416. "[W]hen the question is whether a patent claiming the combination of elements of prior art is obvious," the answer depends on

"whether the improvement is more than the predictable use of prior art elements according to their established functions." *Id.* at 417.

With these standards always in mind, and in view of the definition of the skilled artisan and claim interpretations discussed above, we address Petitioner's challenges below.

D. ANTICIPATION BY HEAD

Under Ground 1, Petitioner asserts that claims 1 and 7–23 are unpatentable under 35 U.S.C. § 102(b) as anticipated by Head. Pet. 29–43. Petitioner addresses each limitation of each of these claims and asserts that Head discloses the same. *Id.* Patent Owner disagrees and asserts that Head does not anticipate these claims. PO Resp. 34–49. Much of Patent Owner's argument for patentability is focused on its position regarding the meaning of the claim term *tool*, discussed above, and that no such *tool* is disclosed by the cited prior art. *Id.* at 1. We analyze the parties' positions, in view of the evidentiary record, below.

CLAIM 1

The '439 patent's independent claim 1 recites:

> 1. A deformation system, comprising:
>
> a deformable member having a first set of dimensions; and
>
> a tool within the deformable member having at least a portion thereof operatively arranged to impart a deforming force to the deformable member in order to deform the member from the first set of dimensions at which the deformable member is positionable with respect to a structure to a second set of dimensions at which the deformable member engages with the structure, wherein at least the portion of the tool that imparts the deforming force at least partially comprises a disintegrable material responsive to a selected fluid.

Ex. 1003, 16:14–25.

Petitioner's Position

Addressing the claim's preamble, Petitioner asserts that Head discloses a subterranean wellbore system with a releasable grip arrangement 1, which is a system that can deform from a non-engaged position to an engaged position and that this is the claimed "deformation system." Pet. 19–21, 29 (citing Ex. 1005, 1:5–7, 1:11–14, 1:55–2:7, 3:16–18, 3:45–54, 3:59–4:5, Figs. 1, 2).

Addressing the claim's limitation reciting "a deformable member having a first set of dimensions," Petitioner asserts that Head's disclosed locking part 3 is such a *deformable member* because it can change shape, dimension, or position, upon the application of a force—it expands outwardly to an engaged position (from a first set of dimensions to a second set of dimensions). *Id.* at 29 (citing Ex. 1005, 3:13–18, 3:61–66, Figs. 1, 2; Ex. 1001 ¶ 135).

Addressing the claim's limitation reciting "a tool within the deformable member," Petitioner asserts that Head's Figures 1 and 2 illustrate that the locking part 4 is a wedge for deforming locking part 3 and show it to be within locking part 3. *Id*. at 30 (citing Ex. 1005, 3:13–18, 3:57–66, Figs. 1, 2; Ex. 1001 ¶ 136).

Addressing a further part of this same claim limitation reciting the *tool* "having at least a portion thereof operatively arranged to impart a deforming force to the deformable member in order to deform the member from a first set of dimensions at which the deformable member is positionable with respect to a structure to a second set of dimensions," Petitioner's annotated Figures 1 and 2 from Head illustrate such an

arrangement and deformation, they are reproduced below, as annotated by Petitioner:

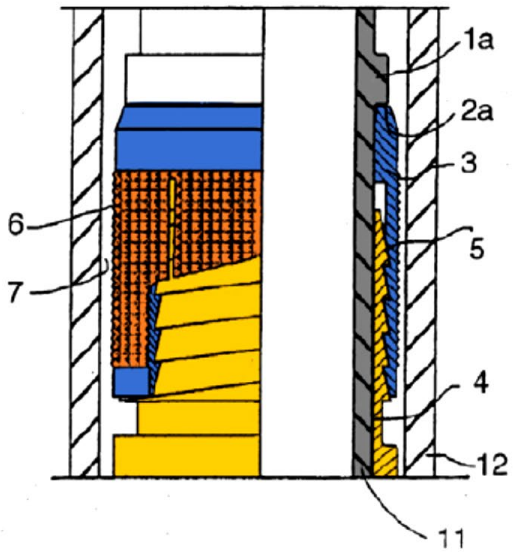

Fig 1

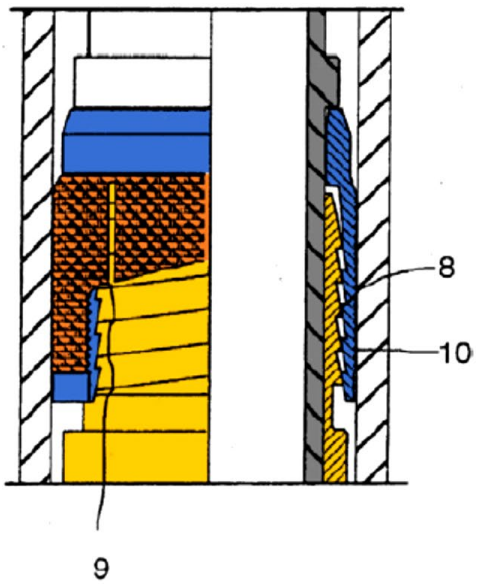

Fig 2

Head's Figure 1 is shown above-left and Head's Figure 2 is shown above-right, each as annotated by Petitioner, showing cross-sectioned views of the interior of Head's disclosed packer-system. Petitioner annotates Head's locking part 3 in blue coloring, annotates head's locking part 4 in light orange coloring, and annotates the knurled gripping surface 6 of locking part 3 in dark orange coloring. Pet. 30.

Petitioner asserts that, when locking part 3 is not engaged against the wellbore casing 7, the entire device is free to move throughout the wellbore, meaning it is positionable. *Id.* This is shown by the arrangement in Figure 1, above. Petitioner asserts that locking part 4 creates stress, friction, and pressure to force locking part 3 outward to engage the casing 7, which is a deforming force to deform locking part 3, and that this outwardly expands

locking part 3 to a second set of dimensions, thereby engaging the casing surface (the structure, as claimed), as shown in Figure 2, above. *Id.* at 31 (citing Ex. 1005, 3:64–66, Figs. 1, 2; Ex. 1001 ¶ 137).

Regarding a further part of this same claim limitation reciting the *tool* deforms the *deformable member* to "a second set of dimensions at which the deformable member engages with the structure," Petitioner asserts that this is illustrated by the transition from Head's Figure 1 to Figure 2, shown above, where the gripping surface 6 of locking part 3 engages against the internal casing surface 7 of the wellbore. *Id.* (citing Ex. 1005, 3:59–66; Ex. 1001 ¶ 138).

Regarding a further part of this same claim limitation reciting "wherein at least the portion of the tool that imparts the deforming force at least partially comprises a disintegrable material responsive to a selected fluid," Petitioner asserts Head discloses that locking member 4, the claimed *tool*, can be made of a material that can be dissolved by a solvent, i.e., intentionally dissolved so as to be *disintegrable* as claimed. *Id*. at 31–32 (citing Ex. 1005, 1:58–64, 2:58–61, 3:52–54, 6:49–51 (claim 5); Ex. 1001 ¶ 139).

In view of the disclosures of Head, discussed above, Petitioner asserts that each element of the '439 patent's claim 1 is disclosed by Head and, therefore, claim 1 is anticipated.

Patent Owner's Position

Patent Owner disagrees with Petitioner. Most generally, Patent Owner argues that Head discloses a packer device, which is itself a *tool*, rather than any individual component of Head's system, for example, locking part 4, being considered a *tool*. PO Resp. 9–11; *see also* PO Sur-

Reply 3. Patent Owner argues that Head's "releasable grip arrangement is one part of a tool or 'packer' that 'provide[s] an impermeable barrier in an annular space between an inside tube and an outside tube of an oil well.'" PO Resp. 10 (citing Ex. 1005, 3:45–50; Ex. 2010 ¶ 24). Patent Owner argues that the person of ordinary skill in the art would not have considered Head's locking part 4 to be a *tool*. *Id.* at 10–11 (citing Ex. 2010 ¶ 26; Ex. 2011, 151:13–18 (Rodgers Deposition Testimony)).

Patent Owner argues independent claims 1, 13, 19, and 21 together over Head and asserts that "[t]he Petition fails to establish that Head discloses the 'tool' arrangement to impart a deforming force to a deformable member, as required by all independent claims." *Id.* at 34. Patent Owner reasserts that Petitioner's proposed means-plus-function interpretation of the claim term *tool*, which we largely adopted as discussed above, is incorrect and, thus, Head does not teach a *tool* as claimed. *Id.* at 35.

Patent Owner also argues that, even under a means-plus-function interpretation of *tool*, "Petitioner has not established that Head's locking part 4 is equivalent to the '439 Patent's corresponding structures," which would be the structures labeled as 102 in Figures 1 and 2, labeled as 122 in Figure 10, and as 142 in Figures 11 and 12 of the '439 patent, and variations, including a wedge, swage, shoulder, cone, ramp, mandrel, etc. *Id.* at 35–37 (citing Ex. 2010 ¶¶ 64, 66). Patent Owner argues that Petitioner has failed to show there are no substantial differences in the way Head's locking part 4 performs the function of deforming locking part 3 or the result achieved relative to the '439 patent's *tool* structures, making the Petition "deficient as a matter of law." *Id.* at 37 (citing *Odetic, Inc. v. Storage Tech Corp.*, 185 F.3d 1259, 1267 (Fed. Cir. 1999)).

Patent Owner argues "Head's locking part 4 does not act like a plug to block the wellbore and isolate zones for fracturing." *Id.* at 40 (citing Ex. 2010 ¶ 70). Patent Owner argues that only an annulus is blocked by Head's packer and that locking part 4's gaps allow fluid to circulate past and, therefore, there is no seal. *Id.* (citing Ex. 1005, 3:45–4:32, 4:58–5:4, Figs. 1–4; Ex. 2010 ¶¶ 70–71). Patent Owner argues that this means the results achieved by Head's alleged *tool* are not equivalent to the claimed *tool*. *Id.*

Analysis

As to claim 1, we conclude Petitioner has shown by a preponderance of the evidence that it is anticipated by Head.

Head discloses a downhole deformation system to be used inside the tube of an oil or gas well so as to provide an impermeable barrier in an annular space—there is an inside tube and an outside tube in the well, sealed by Head's seal and locking members forming a sleeve with holes that are blocked during normal use and can be opened to permit passage of a solvent.[10] Ex. 1005, Abstract. Head discloses slips provided as locking member/part 3 (Head uses "member" and "part" interchangeably), which are outwardly deformed from a first position to a second position to engage the interior surface of a casing 7 of the well. *Id.* at 3:45–4:17, Figs. 1, 2.

Head discloses that, inside locking member 3 is locking member 4, which has ramped threads 5 so that, when locking members 3, 4 are screwed together, locking member 4 outwardly displaces locking member 3 so its gripping surface 6 (knurled surface 10) contacts the casing 7, anchoring the

[10] Regardless of whether the preamble is limiting, Petitioner has shown that the recitation in the preamble is satisfied by the prior art.

entire device in place. *Id.* Head's locking member 4 is a *tool within the deformable member*, locking member 3, *operatively arranged to impart a deforming force to the deformable member*, locking member 3, *in order to deform the member from the first set of dimensions at which the deformable member is positionable with respect to a structure to a second set of dimensions at which the deformable member engages with the structure,* as claimed. The ramped threads of Head's locking member 4 are a wedge or ramp, which is/are the identical structure(s) identified by the '439 patent's Specification as corresponding to the claimed *tool*. Head calls this combination of locking member components a "releasable grip arrangement" or "seal arrangement," which "provide[s] an impermeable barrier in an annular space between an inside tube and an outside tube of an oil well, to maintain a differential pressure between one side of the releasable grip arrangement 1 and the other side in the longitudinal direction," and states that the "seal arrangement comprises locking parts 3 and 4." *Id.* at 3:45–58, 4:6–9. Finally, Head discloses that each of locking parts 3 and 4 can be "made of a material [for example, magnesium or titanium] which may be dissolved by a suitable solvent." *Id.* at 2:6–11, 3:50–54, 4:35, 4:48–50, 6:49–51 (claim 5), 8:6–8 (claim 8). Our reading of Head is supported by Petitioner's evidence and arguments presented in the Petition, as discussed above.

Patent Owner's arguments regarding the interpretation of the claim term *tool* and whether Head discloses such a *tool* are not persuasive. We have construed this claim term in accordance with the intrinsic record as set forth above. Even if a skilled artisan might conventionally refer to tools in the oil and gas production or service industry as downhole devices (*see e.g.*,

Ex. 1001 ¶¶ 7, 92; Ex. 1067, 25:3–10; Ex. 2010 ¶¶ 31, 32; Ex. 2011, 29:5–24), the '439 patent is clear that the term *tool* refers to, for example, a wedge or ramp for deforming an associated component (the deformable member), which is exactly what is disclosed by Head as locking member 4. *See supra* Section III.B.

Patent Owner's argument that Petitioner was required to show the Head locking part 4 was equivalent to the claimed *tool* is not correct under the law. When interpreting a means-plus-function claim limitation, the claimed structure is the structure described in the specification for performing the recited function and equivalents of those structures. *See Odetic*, 185 F.3d at 1266–67. To prove literal infringement or anticipation of a means-plus-function limitation one must show a structure that performs the identical function and that the structure is identical *or* equivalent to the corresponding structure of the patent's specification, i.e., equivalence is not a requirement if identity is established. *Id.*; *see also Peters v. Active Mfg. Co.*, 129 U.S. 530, 537 (1889) ("That which infringes, if later, would anticipate, if earlier."). Here, as discussed above, Petitioner has shown that Head's locking part 4 is a wedge or ramp that deforms Head's locking part 3; a wedge and ramp are among the identical structures identified by the '439 patent as corresponding to the claimed deforming *tool*. Once identity of the structure is shown, equivalence need not be evaluated.

Finally, Patent Owner's argument that Head's locking parts 3, 4 do not perform the same function as the claimed *tool* and *deformable member*, for example, because "Head's locking part 4 does not act like a plug to block the well bore and isolate zone for fracturing," is not persuasive. PO Resp. 40. As discussed above, equivalency is not an issue here because Head

discloses identical structures to the claimed deforming *tool*. Moreover, claim 1 does not require that its recited *tool* seal or plug anything. Even the *deformable member* of claim 1 merely "engages with the structure," which is a broader concept than sealing or plugging the structure.

For the reasons set forth above, Petitioner has carried its burden in showing claim 1 to be anticipated by Head by a preponderance of the evidence. The claim is unpatentable.

CLAIM 7

The '439 patent's claim 7 depends from claim 1 and further requires "a ratcheting or locking feature between the tool and the member for maintaining the tool and the member in an engaged state after actuation of the tool." Ex. 1003, 16:49–52.

Petitioner's Position

Petitioner asserts that the ramped thread of Head's locking part 4, which deforms locking part 3 to engage its gripping surface 6 against the casing 7 of the wellbore, satisfies this claim element. Pet. 32 (citing Ex. 1005, 3:59–61; Ex. 1001 ¶ 140).

Petitioner's witness testifies that Head discloses "[i]t has been conventional practice to use ratchet mechanisms to retain the packer or hanger in its engaged position," that Head discloses the "ramp thread 5 is the method employed to deploy and engage the gripping surface 6," and that it accomplishes this "through stress, friction and pressure" against locking part 3 so that it "aids in maintaining the locking members in the engaged state." Ex. 1001 ¶ 140.

Petitioner provides the following annotated pertinent portion of Head's Figure 2 to illustrate the "ratcheting or locking" arrangement between locking parts 3 and 4:

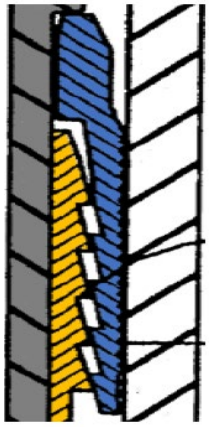

As above, in Petitioner's annotation, locking member 3 is shown in blue color and locking part 4 is shown in light orange color; locking part 3 is shown to have been deformed by the ramped threads of locking part 4 so it engages the casing of the wellbore. Pet. 32.

Patent Owner's Position

Patent Owner makes no arguments specific to claim 7, regarding Head and anticipation, or otherwise. *See generally* PO Resp. and PO Sur-Reply.

Analysis

We agree with Petitioner's assertions.

Head is explicit that its *locking* members 4 and 3, that we have concluded above are analogous to the claimed *tool* and *deformable member*, respectively, are "screwed together on a very course ramp type thread 5." Ex. 1005, 3:57–58. These components of Head *lock* together at their threaded portions, e.g., 5, so they cannot be forced apart and it is at these threaded portions that the two locking members 3, 4 are engaged when

locking member 3 is actuated against the casing 7 by locking member 4. *See* Ex. 1001 ¶ 140. This threaded portion 5 of Head's locking members 3, 4 is "a ratcheting or locking feature between the tool and the member for maintaining the tool and the member in an engaged state after actuation of the tool," as claimed.

For the reasons above, we conclude Petitioner has established by a preponderance of the evidence that Head discloses the limitations of and anticipates claim 7. The claim is unpatentable.

CLAIM 8

Claim 8 depends from claim 1 and further requires "the tool is actuated by hydraulic pressure." Ex. 1003, 16:53–54.

Petitioner's Position

Petitioner asserts that Head discloses this limitation in disclosing its grip arrangement (including the locking parts 3, 4) is set by hydraulic energy or set hydraulically. Pet. 33 (citing Ex. 1005, 4:55–58, 5:13–14).

Patent Owner's Position

Patent Owner makes no arguments specific to claim 8, regarding Head and anticipation, or otherwise. *See generally* PO Resp. and PO Sur-Reply.

Analysis

We agree with Petitioner's assertions.

As identified by Petitioner, Head discloses "hydraulically engag[ing] [the] releaseable grip arrangement" and also "locking members 32, 33 will be put together using an hydraulic assembly system," via a "hydraulic energizing system." Ex. 1005, 4:55–63, 5:13–14. Therefore, Head discloses the limitation of claim 8 requiring that "the tool is actuated by hydraulic pressure."

For the reasons above, we conclude Petitioner has established by a preponderance of the evidence that Head discloses the limitations of and anticipates claim 8. The claim is unpatentable.

CLAIM 9

Claim 9 depends from claim 1 (which recites "at least the portion of the tool that imparts the deforming force at least partially comprises a disintegrable material responsive to a selected fluid") and further requires "the selected fluid is water, brine, oil, or a combination including at least one of the foregoing." Ex. 1003, 16:55–57.

Petitioner's Position

Petitioner asserts that Head discloses this limitation in disclosing its dissolvable material (i.e., the material making up the grip arrangement) can be dissolved by a suitable solvent, asserts that Head further discloses that magnesium is such a dissolvable material, and argues that magnesium is a material that disintegrates in response to water, brine, oil, or a combination including one of these. Pet. 33 (citing Ex. 1005, 1:58–64, 2:9–11, 2:58–61, 3:52–54, 6:49–51 (claim 5); Ex. 1001 ¶ 142). Petitioner argues that the '439 patent confirms this property of magnesium. *Id.* (citing Ex. 1003, 5:67–6:3).

Patent Owner's Position

Patent Owner makes no arguments specific to claim 9, regarding Head and anticipation, or otherwise. *See generally* PO Resp. and PO Sur-Reply.

Analysis

We agree with Petitioner's assertions.

As Petitioner has identified, Head discloses its locking members 3 and 4, as well as its seal member 21, can be made of magnesium. *See, e.g.*,

Ex. 1005, 2:10–11, 3:52–54, 6:49–51 (claim 5), 8:6–8 (claim 15). Petitioner has also identified that the '439 patent evidences magnesium to be a suitable core material that is a disintegrable material. *See, e.g.*, Ex. 1003, 3:12–14. Petitioner's witness states:

> Magnesium is inherently a "disintegrable material responsive to a selected fluid" as required by claim 1 because it will at least partially disintegrate, decompose, or otherwise react with "a selected fluid." Magnesium is also inherently "responsive to" "water, brine, oil, or a combination" of these fluids because magnesium is known to at least react with water and/or brine to decompose.

Ex. 1001 ¶ 142; *see also* Ex. 1010 ¶ 14 (magnesium is a reactive material, reactive to downhole wellbore conditions, such as oil and water). As noted above, Patent Owner does not specifically contest any of these points.

For the reasons above, we conclude Petitioner has established by a preponderance of the evidence that claim 9 is anticipated by Head. The claim is unpatentable.

CLAIM 10

Claim 10 depends from claim 1 and further requires "the deformable member is at least temporarily secured to a support member for enabling relative movement between the tool and the deformable member during deformation." Ex. 1003, 16:58–61.

Petitioner's Position

Petitioner asserts that Head discloses this limitation in disclosing the locking members 3, 4 to be held on or supported by a mandrel 1a and secured in a non-engaged position by shear pins, where the mandrel 1a allows relative movement between the tool and the deformable member, i.e., the locking members 3, 4, during deformation of locking member 3 by

locking member 4. Pet. 34 (citing Ex. 1005, 4:25–32, Figs. 1, 2; Ex. 1001 ¶ 143).

Patent Owner's Position

Patent Owner makes no arguments specific to claim 10, regarding Head and anticipation, or otherwise. *See generally* PO Resp. and PO Sur-Reply.

Analysis

We agree with Petitioner's assertions.

As identified by Petitioner, Head discloses that its locking members 3 and 4 screw together, i.e., they have relative movement between one another. *See* Ex. 1005, 3:57–61. Further, both of the locking members 3 and 4 are secured to and supported by mandrel 1a, as shown in Head's Figures 1 and 2. These facts are not contested by Patent Owner.

For these reasons, we conclude Petitioner has established by a preponderance of the evidence that claim 10 is anticipated by Head. The claim is unpatentable.

CLAIM 11

Claim 11 depends from claim 1 and further requires "the deformable member is at least in part disintegrable." Ex. 1003, 16:62–63.

Petitioner's Position

Petitioner asserts that Head discloses this limitation in disclosing, *inter alia*, "locking members 3, 4 which may themselves be made of a material which can be dissolved by a solvent" and in actually claiming "said first and second locking members are made of the dissolvable material." Pet. 35 (citing Ex. 1005, 1:58–64, 2:58–61, 3:52–54, 6:49–51 (claim 5)).

Patent Owner's Position

Patent Owner makes no arguments specific to claim 11, regarding Head and anticipation, or otherwise. *See generally* PO Resp. and PO Sur-Reply.

Analysis

We agree with Petitioner's assertions.

We concluded, as discussed above, that Head's locking member 3 is a *deformable member*, as claimed. Head expressly states that both of its locking members 3 and 4 can be made of a dissolvable material. *See, e.g.*, Ex. 1005, 2:7–11, 3:52–54. Therefore, Head's *deformable member* is disclosed to be a *disintegrable material*. Patent Owner does not contest this fact.

For these reasons, we conclude Petitioner has established by a preponderance of the evidence that claim 11 is anticipated by Head. The claim is unpatentable.

CLAIM 12

Claim 12 depends from claim 1 and further requires "the deformable member is made from a disintegrable material." Ex. 1003, 16:64–65.

Petitioner's Position

Petitioner argues that the same disclosure of Head that anticipates claim 11 anticipates claim 12. Pet. 35 (also citing Ex. 1001 ¶ 145).

Patent Owner's Position

Patent Owner makes no arguments specific to claim 12, regarding Head and anticipation, or otherwise. *See generally* PO Resp. and PO Sur-Reply.

Analysis

We agree with Petitioner's assertions.

We concluded, as discussed above, that Head's locking member 3 is a *deformable member*, as claimed. Head expressly states that both of its locking members 3 and 4, i.e., the entirety of each, can be made of a dissolvable material. *See, e.g.*, Ex. 1005, 2:7–11, 3:52–54. Therefore, Head's *deformable member* is disclosed to be a *disintegrable material*. Patent Owner does not contest this fact.

For these reasons, we conclude Petitioner has established by a preponderance of the evidence that claim 12 is anticipated by Head. The claim is unpatentable.

CLAIM 13

Claim 13 is an independent claim and recites:

> 13. A deformation system, comprising:
>
> a deformable member having a first set of dimensions; and
>
> a tool having at least a portion thereof operatively arranged to impart a deforming force to the deformable member in order to deform the member from the first set of dimensions at which the deformable member is positionable with respect to a structure to a second set of dimensions at which the deformable member engages with the structure, wherein at least the portion of the tool that imparts the deforming force at least partially comprises a disintegrable material responsive to a selected fluid, and wherein the deformable member is arranged to seal against the structure after deformation of the member.

Ex. 1003, 16:66–17:12. Claim 13 is similar to independent claim 1, however, it does not require that the *tool* be within the *deformable member* and it adds the limitation that *the deformable member be arranged to seal against the structure* on deformation.

Petitioner's Position

Just as claims 13 and 1 have mostly similar elements, as noted, Petitioner's arguments regarding Head's anticipation of claim 13 are substantially similar to those for claim 1. Pet. 35–36; *see also* Ex. 1001 ¶¶ 146–152. We will not restate those same arguments.

Regarding the limitation requiring "the deformable member is arranged to seal against the structure after deformation of the member," which is the divergence from claim 1 of most significance, Petitioner asserts both that Head's locking part 3 is depicted as *sealed against* the internal casing 7 in Head's Figure 2 and also that Head's seal assembly adjacent the locking member 4 also includes a *deformable member*, as claimed, in seal member 21, which is deformed by locking member 4. Pet. 36–37 (citing Ex. 1005, 3:13–18, 3:59–4:5, 4:19–20, 4:38–44, Figs. 2, 4); *see also* Ex. 1001 ¶ 153. Head's Figures 2 and 4, illustrating these rationales for anticipation, as annotated by Petitioner, are reproduced below:

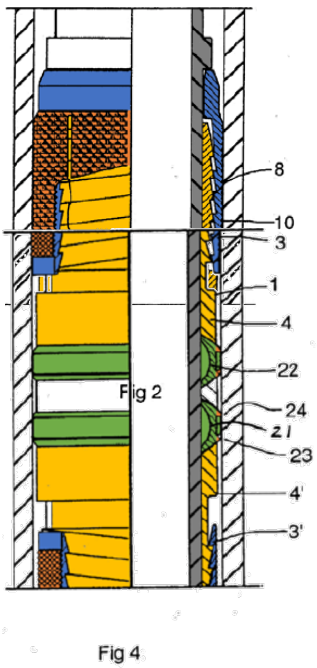

Although shown by Petitioner in the Petition side-by-side, Figures 2 and 4 are shown here stacked one above the other to better represent the arrangement of components common to both figures and how they interact. Figure 2, top portion above, again shows the interaction between interior locking member 4 (light orange color) and exterior locking member 3 (blue color) in an engaged state where the gripping surface of locking member 3 is forced against casing. Ex. 1005, 3:45–4:5, Fig. 2. Figure 4, bottom portion above, shows a continuation of locking member 4 (light orange color) as it extends downward to abut the seal assembly's seal support (green color), which is deformed by being forced against the locking member 4 so that a metal-to-metal seal is provided between the casing and seal member 21. *Id.* at 4:6–47, Fig. 4.

Petitioner's witness, Dr. Rodgers, states that when Head's locking part 3 is pressed against the internal casing surface 7, it necessarily seals against the structure after deformation of the member. Ex. 1001 ¶ 153. Petitioner's witness further states that when seal member 21 is pressed against the casing upon deformation of the seal support 20, it forms a metal-to-metal pressure seal, thus, the seal assembly 20/21 is arranged to seal against the structure after deformation of the member. *Id.* ¶ 154.

Patent Owner's Position

Patent Owner's first argument is that claim 13 recites the same *tool* as claim 1 and, therefore, the same arguments apply. PO Resp. 40. Patent Owner also identifies Petitioner's two theories on how Head meets the *seal against* element of claim 13, i.e., the locking part 3 is the *deformable member* and *seals against* the casing and/or the seal assembly 20/21 is the

deformable member and *seals against* the casing. *Id.* at 40–41. Patent Owner argues that both of these theories fail because they both rely on Head's locking part 4 being a *tool*. *Id.* at 41.

Regarding the *seal against* claim element, Patent Owner argues that Petitioner failed to provide any evidence that Head discloses that locking part 3 "seals against" a structure because Petitioner relies solely on the illustration in Head's Figures 1 and 2. *Id.* Patent Owner argues that, under the correct interpretation of *seal against*, as proposed by Patent Owner (i.e., continuous engagement), the Petition does not point to any disclosure in Head of such engagement and instead relies on *any* engagement to satisfy the claimed seal. *Id.*

Patent Owner argues that Head does not disclose a sealing or continuous engagement by locking part 3, but discloses that the engagement of locking part 3 against the casing leaves open gaps at the slots in locking part 3 so acid can be circulated past. *Id*. at 41–42 (citing Ex. 1005, 3:59–67, 4:48–54; Ex. 2010 ¶ 59; Ex. 2011, 137:6–13 (Rodgers deposition testimony)). On this Petitioner-theory, Patent Owner concludes, "Head does not describe locking part 3 as forming a 'seal,' but instead reserves that term for the continuous engagement formed by seal member 21." *Id.* at 42 (citing Ex. 1005, 4:42–44).

Regarding Petitioner's second theory on the *sealing against*, Patent Owner argues that the way locking part 4 imparts a force on Head's seal assembly 20/21 is substantially different from the way the '439 patent's *tools* impart a deforming force on the *deformable member*; thus, argues Patent Owner, barring *equivalence* of Head's locking part 4 to the claimed *tool*. *Id.* at 42.

Analysis

We agree with Petitioner's assertions.

We have discussed above how Head anticipates the limitations of claim 13 shared with claim 1 and will not restate these facts and conclusions. The similar elements of claim 13 are anticipated by Head for the same reasons as for claim 1. Furthermore, Patent Owner's arguments over the interpretation of *tool* are not persuasive for the reasons discussed above.

Turning to Petitioner's first theory pertaining to Head's *tool* being its locking member 4 and its *deformable member* being its locking member 3, we agree with Petitioner that Head discloses that locking member 3 *seals against* the surrounding structure of the casing surface. Head most specifically describes a seal relating to its "seal assembly," which is composed of seal member 2, seal support 20, and seal component 21; however, Head repeatedly refers to a seal arrangement as including the locking members, identifying, for example, that "[t]he seal arrangement comprises locking parts 3 and 4" where, when screwed together, "the gripping surface of the locking part 3 [is engaged] against the internal casing surface 7." Ex. 1005, 2:6–7, 3:57–61. Contrary to Patent Owner's argument, Head expressly calls its locking parts 3, 4 a "seal arrangement," as opposed to its "seal assembly," which is composed of locking part 4 and seal member 2 (which includes seal support 20 and seal component 21), noted above. *Id.* at 4:6–7.

The only structure that Head's locking part 3 can conceivably be sealed against upon being deployed by Head's locking part 4 is Head's casing structure, into which locking member 3 is forced by Head's locking part 4. *See id.* at Figs. 1, 2. Thus, according to Head's express disclosure,

Head in this way anticipates the claim element "the deformable member is arranged to seal against the structure after deformation of the member."

Turning to Petitioner's second theory regarding *sealed against*, we also agree that, under claim 13, the seal assembly 20/21 can be considered a *deformable member* because it deforms from a first set of dimensions to a second (where it engages the surrounding casing structure) responsive to a force imparted by locking part 4, and claim 13 does not require the *tool* to be within the *deformable member.* Patent Owner's argument about equivalence of structures is inapplicable here because, as discussed above, Head's locking member 4 has already been identified as a wedge or a ramp, which is an identical structure to that disclosed in the '439 patent's Specification as performing the deforming function of the claimed *tool*. Even if one were required to shift perspective from the relationship between locking part 4 and 3, to locking part 4 and Head's seal assembly 20/21, locking part 4 is still illustrated in Figures 3 and 4 to be a wedge or a ramp with respect to how it physically impinges upon seal assembly 20/21.

For these reasons, we conclude Petitioner has established by a preponderance of the evidence that claim 13 is anticipated by Head. The claim is unpatentable.

CLAIM 14

Claim 14 depends from claim 13 and further requires that "the deformable member includes a seal element." Ex. 1003, 17:13–14.

Petitioner's Position

Petitioner asserts that Head discloses this limitation in disclosing the seal assembly 20 with seal element 21 or, alternatively, in disclosing locking part 3's gripping surface 6, which is a course knurled surface 10 and,

according to Petitioner's witness, Dr. Rodgers, at least partially seals. Pet. 37 (citing Ex. 1001 ¶¶ 155–156; Ex. 1005, 4:1–3, Fig. 2).

Patent Owner's Position

Patent Owner argues that "both theories fail." PO Resp. 43. Regarding Petitioner's first proposed theory, Patent Owner argues Petitioner has identified both elements 20 and 21 of Head as a *seal element* as claimed, but that if the entire Head seal assembly 20/21 is the claimed *seal element*, Petitioner does not also explain what element is the *deformable member*. *Id.*

Regarding Petitioner's other proposed theory, Patent Owner argues that Head's locking member 3's gripping surface 6 is not a *seal element* because it does not continuously engage against the casing structure, per Patent Owner's proposed interpretation of *seal element* (discussed above). *Id.* at 44. Patent Owner gives no credit to Petitioner's witness's testimony that this gripping surface 6 would provide at least a partial seal. *Id.* (citing Ex. 1001 ¶ 155). Patent Owner argues that the slots Head discloses are part of locking member 3 leave gaps to allow fluid to circulate, meaning there is no seal. *Id.* at 44–45 (citing Ex. 1005, 3:66–67, 4:48–54, Figs. 1, 2; Ex. 2010 ¶¶ 59–60; Ex. 2011, 137:6–13).

Analysis

We agree with Petitioner's positions on claim 14.

Regarding Petitioner's first theory on the *seal element*, Head discloses that its seal member 2 includes the seal support 20, which is the primary seal structure and deforms under force from the locking member 4, and includes the seal component 21, which is shown in Figures 3 and 4 to be a sealing component. Of relevance, Head states:

> In operation, when the high strength alloy seal support 20 is deformed 22, it contacts the casing surface at two contact points 23, 24 either side of the softer alloy seal member 21. At the same time the softer alloy is pressed against the casing and conforms to the casing surface forming a metal to-metal pressure seal.

Ex. 1005, 4:39–44. This portion of Head very clearly explains how the two seal member 2 components 20, 21 operate as a *deformable member* and *seal element*.

Regarding Petitioner's second theory, we first note that Head, even while at once identifying and illustrating that the locking member 3 has slots 9, simultaneously identifies locking members 3 and 4 as a "seal arrangement" where "locking part 3 [is engaged] against the internal casing surface 7." *See* Ex. 1005, 3:52–67. Therefore, Head considers its locking member 3 to create a seal of some form with the casing structure. Petitioner's witness, Dr. Rodgers, explains that "[t]he gripping and anchoring parts of Head necessarily at least partially operate as 'seal elements' that seal portions above and below the gripping and anchoring parts." Ex. 1001 ¶ 155 (discussing Ex. 1005, 4:1–3, 3:60–61, Fig. 2). Patent Owner expressly disagrees with Dr. Rodgers, but presents no persuasive countervailing evidence.

For these reasons, we conclude Petitioner has established by a preponderance of the evidence that claim 14 is anticipated by Head. The claim is unpatentable.

CLAIM 15

Claim 15 depends from claim 14 (and thereby from claim 13) and further requires that "the structure is a tubular, a casing, or a tubing radially

outwardly positioned with respect to the tool and the deformable member." Ex. 1003, 17:15–18.

Petitioner's Position

Petitioner asserts that Head discloses this limitation by disclosing a casing 7, depicted as radial and outward of the locking parts 3, 4 and seal assembly 20, 21. Pet. 38 (citing Ex. 1005, 4:39–41, Figs. 1, 3, 4; Ex. 1001 ¶ 158).

Patent Owner's Position

Patent Owner makes no arguments specific to claim 15, regarding Head and anticipation, or otherwise. *See generally* PO Resp. and PO Sur-Reply.

Analysis

We agree with Petitioner's assertions.

Head describes its systems as being composed of "tubular section[s]" and having annular arrangements, with annular space, for use in an oil or gas well, which is also a tube. *See, e.g.*, Ex. 1005, 1:54–2:5. Such a device would fit inside a typical tubular wellbore. Patent Owner presents no persuasive argument to the contrary. Therefore, we agree with Petitioner's position and argument regarding claim 15.

For these reasons, we conclude Petitioner has established by a preponderance of the evidence that claim 15 is anticipated by Head. The claim is unpatentable.

CLAIM 16

Claim 16 depends from claim 15 (and thereby from claims 14 and 13) and further requires that "the tool is a plug, and the plug and the seal element

are operatively engagable together to fluidly isolate areas in the structure on opposite sides of the tool." Ex. 1003, 17:19–22.

Petitioner's Position

Petitioner asserts that Head discloses this limitation in disclosing that its grip and seal arrangement provides an annular seal arrangement to provide an impermeable barrier between an inside and outside tube of an oil well so differential pressure can be maintained between one side of the releasable grip arrangement and the other. Pet. 38 (citing Ex. 1005, 1:65–2:3). Petitioner argues that Head's locking part 4 is part of this arrangement and when it expands locking part 3, and also expands the seal assembly 20, 21, this seals against the casing 7, acting as a plug in the claimed fashion. *Id.*

Patent Owner's Position

Patent Owner argues that the claim requires "the *tool itself* must be a plug, and not merely a *piece* of a plug." PO Resp. 45 (citing Ex. 2010 ¶ 79). Patent Owner argues that the Specification of the '439 patent supports this understanding where it describes tool 102 as a plug (as illustrated at Figure 2), engaged with the deformable member 104 as a "seat/plug assembly." *Id.* (citing Ex. 1003, 2:34–35, 3:58–65; Ex. 2010 ¶ 79).

Patent Owner argues that Head's locking part 4, which Petitioner contends is the *tool*, cannot be a *plug* and the Petition does not allege it is a plug. *Id*. at 46 (citing Pet. 38).

Analysis

We agree with Petitioner's assertions.

As to Patent Owner's last point, we disagree. Petitioner clearly alleged that Head's locking member 4 is a *plug*. Petitioner alleged:

> Locking part 4 (the "tool") is part of this arrangement, which, as seen in Figures 2 and 4, expands locking part 3 and seal assembly 20/21 (the "deformable members") to seal against the casing 7, thereby isolating, or plugging, the areas on the opposite sides of locking part 4.

Pet. 38. Petitioner thus identifies the locking part 4 to be plugging, or a *plug*.

As to Patent Owner's preceding argument, we next look to the '439 patent's Specification, as urged by Patent Owner, to identify how it describes the *tool* being a *plug*, and find it states:

> Sealingly engaging and anchoring the member 104 with the structure 106 effectively results in the member 104 becoming a seat for the structure 106. Likewise, the engagement of the tool 102 with the member 104 effectively enables the tool 102 to behave as a plug for selectively blocking fluid flow through the structure 106.

Ex. 1003, 3:58–63. This description of how the '439 patent's *tool* works as a *plug* also describes how Head's locking part 4 engages with locking part 3 to create an annular seal as a sealing arrangement, as illustrated at Head's Figure 2.

Head describes its "seal arrangement" as including locking parts 3 and 4; its Figure 2 shows locking part 3 engaged with and anchored to the surrounding casing structure and engagement of locking part 4 with the interior of locking part 3. Ex. 1005, 3:45–4:32. Head states that this "annular seal arrangement [] provide[s] an impermeable barrier between the annular space such as between an inside tube and outside tube of an oil well, such that a differential pressure can be maintained between one side of the releaseable grip arrangement and the other in the longitudinal direction . . . ." *Id*. at 1:65–2:5; *see also* Ex. 1001 ¶ 159. Therefore, Head's disclosed

locking member 4, which we have discussed above as disclosing the claimed *tool*, is a *plug* that engages with Head's locking member 3, which is the claimed *deformable member* and has a *seal element* in its knurled surface that impacts the casing, fluidly isolates areas in the structure on opposite sides of the locking member 4, in conjunction with the locking member 3.

Additionally, Head's locking member 4 also deforms Head's seal assembly 20/21, which can also be considered a *deformable member* and *seal element*, such that the locking member 4 again acts as a plug and, with the seal member 21, fluidly isolates areas in the structure on opposite sides of the locking member 4 and seal member 21.

For these reasons, we conclude Petitioner has established by a preponderance of the evidence that claim 16 is anticipated by Head. The claim is unpatentable.

CLAIM 17

Claim 17 depends from claim 13 and further requires that "the deformable member includes a gripping element for enabling the deformable member to grip the structure." Ex. 1003, 17:23–25.

Petitioner's Position

Petitioner asserts that this limitation is disclosed by Head in that it discloses locking part 3 engages casing 7 with gripping surface 6. Pet. 39 (citing Ex. 1005, 3:59–61). Alternatively, Petitioner argues seal assembly 20, 21 has two contact points 23, 24 that allow the seal to grip casing 7. *Id.* (citing Ex. 1005, 4:39–41).

Patent Owner's Position

Patent Owner makes no arguments specific to claim 17, regarding Head and anticipation, or otherwise. *See generally* PO Resp. and PO Sur-Reply.

Analysis

We agree with Petitioner's assertions regarding Head's locking part 3's gripping surface and/or the seal assembly's contact points 23 and 24 being *gripping elements*, as claimed. *See, e.g.*, Ex. 1005, Figs. 1–4. Patent Owner presents no persuasive arguments to the contrary.

For these reasons, we conclude Petitioner has established by a preponderance of the evidence that claim 17 is anticipated by Head. The claim is unpatentable.

CLAIM 18

Claim 18 depends from claim 17 (and thereby from claim 13) and further requires that "the gripping element also seals the deformable member against the structure." Ex. 1003, 17:26–28.

Petitioner's Position

Petitioner asserts that this limitation is disclosed by Head because Head's gripping surface 6 at least partially seals locking part 3 against the casing 7. Pet. 39 (citing Ex. 1001 ¶ 162). Further, Petitioner asserts that as the contact points 23, 24 of seal support 20 contact the casing, they allow seal member 21 to create a metal-to-metal seal with the casing; thus, these contact points 23, 24 necessarily seal the assembly. *Id.* at 40 (citing Ex. 1005, 4:39–44, Fig. 4; Ex. 1001 ¶ 163).

Patent Owner's Position

Patent Owner renews its argument as made for claim 13, that Head's locking part 3 does not *seal against* the casing for lack of a continuous engagement. PO Resp. 46 (citing *id*. at Section IV.A.2.a). Patent Owner also argues that Petitioner has not established that the seal support 20 forms a seal by continuous engagement with the casing and that Head fails to disclose that the seal supports 20/22 form a seal. *Id.* at 47 (citing Ex. 1001 ¶ 163; Ex. 1005, 4:41–44; Ex. 2010 ¶ 61). Patent Owner concludes that the skilled artisan would not understand from Head that support 20 forms a seal. *Id.* (citing Ex. 2010 ¶ 61).

Analysis

We agree with Petitioner's assertions.

Petitioner's witness, Dr. Rodgers, testifies that "[t]he gripping and anchoring parts of Head necessarily at least partially operate to 'seal[] the deformable member against the structure,' which can be seen in Figure 2 where the locking part 3 is flush with the casing." Ex. 1001 ¶ 162. Head's Figure 2 shows that locking member 3's gripping surface 6 is indeed pressed into the casing structure; as discussed above regarding claim 13, this creates a seal. *See* Ex. 1005, Fig. 2.

Dr. Rodgers also testifies that

> Head also discloses, in Figures 3 and 4, a seal support 20 deforms and "contacts the casing surface at two contact points 23, 24 either side of the softer alloy seal member 21." Ex. 1005 (4:39-41). Moreover, the "metal-to-metal seal assembly" comprising seal member 21 (i.e., "deformable member") is "pressed against the casing and conforms to the casing surface forming a metal-to-metal pressure seal" (i.e., "a seal element"). Ex. 1005 (4:39-44). The contact points 23 and 24 necessarily at least partially operate to "seal[] the deformable member against the structure,"

> which can be seen in Figure 4 where they are flush with the casing.

Ex. 1001 ¶ 163. Head's Figure 4 shows that the system's seal member 21 is pressed into sealing engagement with the contact points 23, 24, thus, all creating a seal, as discussed above regarding claim 13. *See* Ex. 1005, Fig. 4.

Thus, Dr. Rodgers confirms Petitioner's assertions on each theory and Head's disclosure, likewise, supports Petitioner's assertions. We do not find Patent Owner's arguments persuasive.

For these reasons, we conclude Petitioner has established by a preponderance of the evidence that claim 18 is anticipated by Head. The claim is unpatentable.

CLAIM 19

Claim 19 is an independent method claim similar to independent claim 1, reciting:

> 19. A method of operating a deformation system, comprising:
>
> actuating a tool having at least a portion thereof within a deformable member and operatively arranged to impart a deforming force to the deformable member in order to deform the member from a first set of dimensions at which the deformable member is positionable with respect to a structure to a second set of dimensions at which the deformable member engages with the structure, wherein at least the portion of the tool that imparts the deforming force at least partially comprises a disintegrable material;
>
> deforming the deformable member with the tool; and
>
> disintegrating at least the portion of the tool upon exposure to a selected fluid.

Ex. 1003, 17:29–18:8. As can be seen upon comparing claim 19 and claim 1, claim 19 recites much of the same language as claim 1, but is adapted to recite steps of a method.

Petitioner's Position

Petitioner identifies essentially the same disclosure of Head that was asserted to anticipate claim 1 as also anticipating claim 19. Pet. 40–41. Petitioner asserts Head discloses using the claimed system components in the way claimed in claim 19, e.g., actuating the tool, deforming the member, and disintegrating a portion of the tool. *Id.* (citing Ex. 1005, 3:16–18, 3:57–66, 5:15–28, Fig. 7).

Patent Owner's Position

Patent Owner's arguments over claim 19 and anticipation by Head are identical to those presented over claim 1. PO Resp. 34–40.

Analysis

We agree with Petitioner's assertions.

For the same reasons discussed above regarding claim 1, we conclude Petitioner has established by a preponderance of the evidence that claim 19 is anticipated by Head. The claim is unpatentable.

CLAIM 20

Claim 20 depends from claim 19 and further requires "disintegrating the deformable member." Ex. 1003, 18:9–10. Claim 20 is similar to claim 11, but requires disintegrating the deformable member.

Petitioner's Position

Petitioner asserts claim 20 is anticipated by Head for the reasons Head discloses that the tool of claims 1 and 19 are disintegrable. Pet. 42 (internally citing Sections X.A.1.f and X.A.14.e). Notwithstanding this

erroneous internal citation by Petitioner, we understand that Petitioner's evidence regarding claim 11 is applicable to claim 20 because the claims are largely identical. *See id*. at 35 (citing Ex. 1005, 1:58–64, 2:58–61, 3:52–54, 6:49–51 (claim 5)).

Patent Owner's Position

Patent Owner makes no arguments specific to claim 20, regarding Head and anticipation, or otherwise. *See generally* PO Resp. and PO Sur-Reply. However, we understand Patent Owner's arguments over claim 11 to also be applicable to claim 20.

Analysis

We agree with Petitioner's assertions.

For the same reasons discussed above regarding claim 11, we conclude Petitioner has established by a preponderance of the evidence that claim 20 is anticipated by Head. The claim is unpatentable.

CLAIM 21

Claim 21 is an independent method claim very similar to independent claim 13 and recites:

> 21. A method of operating a deformation system, comprising:
>
> actuating a tool having at least a portion thereof operatively arranged to impart a deforming force to the deformable member in order to deform the member from the first set of dimensions at which the deformable member is positionable with respect to a structure to a second set of dimensions at which the deformable member engages with the structure, wherein at least the portion of the tool that imparts the deforming force at least partially comprises a disintegrable material;

> deforming the deformable member with the tool, wherein deforming the deformable member includes sealing the deformable member against a radially adjacent structure; and
>
> disintegrating at least the portion of the tool upon exposure to a selected fluid.

Ex. 1003, 18:11–27. Like independent claim 13, independent claim 21 does away with the requirement of claim 1 that the *tool* be within the *deformable member* and adds a limitation that upon deforming the member *seals against* a radially adjacent structure. Compared with claim 13, claim 21 requires performing steps with the otherwise recited structures, e.g., actuating a tool, deforming the deformable member, and disintegrating a portion of the tool.

Petitioner's Position

Petitioner asserts claim 21 is anticipated by Head for the reasons Head discloses that the system of claim 1 is anticipated. Pet. 42–43 (internally citing Sections X.A.1.a, X.A.1.b–e, and X.A.8.d). Although not specifically cited, we understand Petitioner's evidence relating to the anticipation of claim 13 also applies to claim 21 because the two claims are largely identical. *See id.* at 35–37; *see also supra* discussion of claim 13.

Patent Owner's Position

For the limitations of claim 21 that overlap with claim 1, Patent Owner renews its arguments made over claim 1 and Head. PO Resp. 47–48. Similarly, for the limitations of claim 21 that overlap with claim 13, Patent Owner renews its arguments made over claim 13 and Head. *Id*. at 48.

Analysis

We agree with Petitioner's assertions.

For the same reasons discussed above regarding claims 1 and 13, we conclude Petitioner has established by a preponderance of the evidence that claim 21 is anticipated by Head. The claim is unpatentable.

CLAIM 22

Claim 22 depends from claim 21 and further requires "the tool is a plug operatively engagable with the member for together isolating zones in the structure on opposite sides of the tool." Ex. 1003, 18:28–31. Claim 22 is similar to claim 16, which indirectly depends from claim 13.

Petitioner's Position

Petitioner asserts claim 22 is anticipated by Head for the reasons Head discloses that the system of claim 1 was anticipated. Pet. 43 (internally citing Section X.A.1.a). Although not specifically cited, we understand Petitioner's evidence relating to the anticipation of claim 16 also applies to claim 22.

Patent Owner's Position

Patent Owner renews its arguments made over claim 16 and Head. PO Resp. 48.

Analysis

We agree with Petitioner's assertions.

For the same reasons discussed above regarding claim 16, we conclude Petitioner has established by a preponderance of the evidence that claim 22 is anticipated by Head. The claim is unpatentable.

CLAIM 23

Claim 23 depends from claim 22 and thereby from claim 21 and further requires "fracturing a selected one of the zones while the zones are isolated from each other." Ex. 1003, 18:32–34.

Petitioner's Position

Petitioner asserts "Head discloses that its packer provides an impermeable barrier in a wellbore. Head discloses fracturing in one isolated zone. Ex.1001 (¶183)." Pet. 43; *see also* Ex. 1001 ¶ 183 (citing Ex. 1005, 1:54–55, 3:45–50).

Patent Owner's Position

Patent Owner argues that Head does not disclose fracturing at all. PO Resp. 48. Patent Owner asserts that, even considering Dr. Rodgers's statements that a skilled artisan would understand Head's packer device would be used in hydraulic fracking, Head fails to disclose the *fracturing* limitation of claim 23 because mere understanding of a possible use of Head's packer is not sufficient and there is no contention that a skilled artisan would use Head's packer to isolate a zone on one side of the packer for fracturing, as required by the claim. *Id.* at 49.

Analysis

We agree with Petitioner's position.

A person of ordinary skill in the art having Head's disclosure before them would instantly understand (at once envisage) that Head's packer device, which would include locking members 3 and 4 and sealing components 20 and 21, would necessarily be used in hydraulic fracturing.

Dr. Rodgers explains that "packers" are used as isolation devices for fracking operations. Ex. 1001 ¶ 18. Head's systems and devices are disclosed to be used as *packers* in oil and gas wells. Ex. 1001 ¶ 183; Ex. 1005, 1:5–7. The stated purpose for Head's invention is "that a differential pressure can be maintained between one side of the releasable grip arrangement and the other in the longitudinal direction." Ex. 1005,

2:1–3. Dr. Rodgers states that "[a] POSA would therefore deploy the packer of Head as disclosed in Head into the wellbore, isolating two zones of the wellbore from one another while conducting hydraulic fracturing." Ex. 1001 ¶ 183. Thus, even though Head does not use the term *fracturing*, the skilled artisan would at once envisage using Head's disclosed releasable/dissolvable grip and seal arrangement for this purpose, as claimed.[11] *See Microsoft*, 878 F.3d at 1068.

For the reasons discussed above, we conclude Petitioner has established by a preponderance of the evidence that claim 23 is anticipated by Head. The claim is unpatentable.

E. OBVIOUSNESS OVER HEAD AND XU OR HOLMES

PETITIONER'S POSITION ON COMBINING THE PRIOR ART

Claims 1 and 7–23 have been discussed above as proven anticipated by Head by a preponderance of the evidence. "Though it is never necessary to so hold, a disclosure that anticipates under § 102 also renders the claim invalid under § 103, for 'anticipation is the epitome of obviousness.'"

---

[11] Petitioner's Reply cites other evidence of record supporting its assertion that the skilled artisan would understand Head's devices are used to isolate fracking zones:

> POSITAs understand that Head's devices are used for zonal isolation in fracking operations. *See* Ex.1009(¶9) (packers "used as a 'Frac Plug.'"); Ex.1021(2) (showing "packers that separate the producing zones"); Ex.1023(5) (listing packers under "Zonal isolation techniques"); Ex.1027(2) (showing isolation packers used in fracking); Ex.2017(3) ("packers isolate each interval"); Ex.1067(20:1-21:17, 162:8-10); Ex.1060(4) (packers used for "[a]ssisting with stimulation operations" and "[s]eparation of producing zones").

Pet. Reply 21.

Connell v. Sears, Roebuck & Co., 722 F.2d 1542, 1548 (Fed. Cir. 1983) (quoting *In re Fracalossi*, 681 F.2d 792 (CCPA 1982). Therefore, claims 1 and 7–23 would have been obvious over Head and Xu or Holmes for the reasons discussed above and we do not further discuss these claims under this ground. Rather, here we address claims 2–6, which were not shown to be anticipated by Head.

Head, and its relevance to and disclosure of the limitations of the claims of the ’439 patent, has been discussed above. Each of Xu and Holmes teaches, and is cited by Petitioner for teaching, disintegrable material to replace traditional components in downhole equipment. Pet. 59. Petitioner asserts that Head teaches that its *tool* and *deformable member* components, i.e., locking members 3 and 4, can be made of a dissolvable material and that each of Xu and Holmes teaches that its dissolvable, disintegrable materials can be used with existing downhole plug designs, such as taught by Head, thus using Xu’s or Holmes’s materials in Head’s device would merely be replacing traditional components with tailored disintegrable materials. *Id.* at 61.

Petitioner asserts that the person of ordinary skill in the art would be motivated to modify Head to use Xu’s or Holmes’s materials to reduce downhole milling and to tailor disintegration of components for desired applications, for example, controlling rate and extent of dissolution, as taught by Xu and Holmes. *Id*. (citing Ex. 1001 ¶¶ 251–258; Ex. 1010 ¶ 15, Ex. 1008 ¶ 12). Moreover, Petitioner asserts Xu teaches that its materials “‘provide a unique and advantageous combination of mechanical strength properties’” and Holmes teaches its materials “allow an operator to substantially control the time from first exposure of the downhole tool 10 to

a reactive environment until completion of dissolving," which are properties a person of ordinary skill would have valued adding to Head's designs. *Id.* at 61–62 (citing Ex. 1010 ¶ 15; Ex. 1008 ¶¶ 12, 41; Ex. 1001 ¶ 265).

Petitioner also asserts that the person of ordinary skill in the art would have had a reasonable expectation of successfully using the materials of and as described by Xu and Holmes in Head's device because Xu and Holmes teach that their materials have properties engineered for such uses. *Id.* at 62 (citing Ex. 1008 ¶ 41; Ex. 1001 ¶ 265). Petitioner asserts that such substitutive use would merely be the predictable use of prior art elements according to their established functions, and similar disintegrable materials had been in similar use in the art, therefore, the person of ordinary skill would have bolstered confidence that the combination would work. *Id.* (citing Ex. 1001 ¶¶ 267–269).

We agree with Petitioner's rationale for combining Head and Xu or Holmes and conclude that the person of ordinary skill in the art would have been motivated to do so and expected to successfully do so for the reasons asserted by Petitioner. Patent Owner does not argue to the contrary. *See* PO Resp. 64–67.

Most persuasive on motivation for and expectation of successfully combining the references is the disclosure of the references themselves. Head is explicit that its locking members 3 and 4, and its seal components 20, 21 are preferably materials that dissolve. Ex. 1005, 3:45–4:54. Xu is explicit that it was "very desirable" to form downhole (the hole being oil and natural gas wells) components and tools of materials that have controllable dissolution, for example nanomatrix materials comprising magnesium, as it discloses, to "eliminate the need for milling or drilling" to remove

components or tools. Ex. 1008, Abstract, ¶¶ 9, 10, 12, 13. Holmes is explicit that downhole tools eventually become unwanted obstructions, so making such tools of dissolvable materials, such as magnesium, is advantageous. Ex. 1010, Abstract, ¶¶ 1–5, 13–14.

Thus, as asserted by Petitioner, it would have been obvious to combine Head and Xu or Holmes and the person of ordinary skill in the art would have been motivated to do so and would have reasonably expected to successfully do so.

PATENT OWNER'S GENERAL DEFENSE TO OBVIOUSNESS

Patent Owner argues that Petitioner's obviousness arguments in the Petition are not sufficiently particular and so the Petition is defective. *Id.* at 64–65 (citing *Intelligent Bio-Systems, Inc. v. Illumina Cambridge Ltd.*, 821 F.3d 1359, 1369 (Fed. Cir. 2016); *St. Jude Medical, LLC v. Snyders Heart Valve LLC*, IPR2018-00105, Paper 59 at 35–37 (PTAB May 2, 2019); *Nanya Tech. Corp. v. Lone Star Silicon Innovations, LLC*, IPR2018-00065, Paper 22 at 17-20 (PTAB Apr. 24, 2019)). Patent Owner argues that "Petitioner's lack of particularity also deprives Patent Owner of meaningful notice or opportunity to respond to any purported obviousness theory." *Id.* at 65.

We are not persuaded by this argument.

As should be apparent from the analysis in this Final Decision, this Panel was able to discern Petitioner's obviousness arguments, even if the Petition was less focused than desirable. For example, the disclosures of Head (and Starr and Stout) that Petitioner asserts apply to the subject matter of the '439 patent's claims were set forth in the Petition, as were the Petitioner-conceded shortcomings of each primary reference and the

portions of secondary references (Xu and Holmes) that addressed those shortcomings. Thus, the Petition was sufficiently specific and particular as to its grounds for obviousness both for the Board to consider Petitioner's positions, which we analyze below, and for Patent Owner to have responded to Petitioner's positions.

Intelligent Bio-Systems, 821 F.3d 1359, is not determinative. In *Intelligent Bio-Systems*, the Federal Circuit affirmed a Board panel's decision that a petitioner had failed to meet its burden of proving by a preponderance of the evidence that claims were obvious. *Id.* The Federal Circuit noted the panel's conclusion that the petition in the case did not point to any specific evidence as to why the skilled artisan would have expected the prior art to meet the requirements of other, combined, prior art, thus, failing to evidence motivation to combine and reasonable expectation of successfully doing so, which are questions of fact. *Id.* at 1365–66. The Federal Circuit also held that issues required for a petitioner's case must be presented in the petition and those presented for the first time in a reply or expert declaration are correctly not considered. *Id.* at 1369. Taking the Federal Circuit's guidance into consideration, *Intelligent Bio-Systems* reinforces that each case must be examined individually to determine if a petition satisfactorily makes a petitioner's case for unpatentability, particularly for issues of fact. *Intelligent Bio-Systems* does not require that every case with a petition that presents some issues generally must be considered a failure. Particularity in a petition is important, especially at the institution phase of a proceeding, but whether a petition is particular enough is to be determined by the Panel on a case-by-case basis.

St. Jude Medical, IPR2018-00105, Paper 59, is not determinative. In *St. Jude Medical*, a panel concluded a petitioner's obviousness case was insufficient because it was not proved, not that a petitioner's less-than-desirable-particularly is automatically fatal to a case. *See id*. at 35–37. One noted deficiency in the case was the petitioner's and its expert's failure to identify specifically what elements would have been substituted between prior art references, a deficiency that we do not discern in this proceeding as explained herein. *Id.* at 36–37. Whether evidence is sufficient to establish obviousness by a preponderance, as is a petitioner's burden, can only be determined on a case-by-case basis.

The circumstances in *Nanya Tech.*, IPR2018-00065, Paper 22, are similar. There, the panel reviewed a petition and concluded that certain cited references did not expressly support assertions made by the petitioner and that the petition did not provide more than bare citations to those references (and pointing to figures therein, generally) and that this was insufficient to carry its burden of proof. *Id*. at 17. Again, in *Nanya Tech.*, as in any case, whether a petitioner has met its burden of proof can only be determined on the record before a panel and must be determined on a case-by-case basis.

CLAIM 2

Claim 2 depends from claim 1 and further requires that "the disintegrable material comprises a plurality of metallic powder particles, each powder particle including a particle core, each particle core comprising a core material and a metallic coating layer disposed on the particle core and comprising a metallic coating material." Ex. 1003, 16:26–31.

Petitioner's Position

Petitioner asserts that Xu teaches a disintegrable material as claimed, for example, "Xu Figures 1 and 2 teach a powder containing a particle core 18 made of electrochemically active metals and a metallic coating layer 16, 20 on top of the particle core." Pet. 68–69 (citing Ex. 1008 ¶ 43, Figs. 1, 2; Ex. 1001 ¶¶ 271, 273); *see also* Ex. 1001 ¶¶ 252–253.

In the alternative, Petitioner asserts that Holmes teaches a disintegrable material as claimed by disclosing its dissolvable material comprises core materials coated by metal shells configured to react with the downhole environment to degrade. *Id.* at 68 (citing Ex. 1010 ¶¶ 5, 15, 21).

Patent Owner's Position

Patent Owner does not offer an argument specifically directed to claim 2 and obviousness over Head and Xu or Holmes. *See* PO Resp. 64–67. Instead, Patent Owner relies on its arguments on Petitioner's anticipation and obviousness challenges, generally, as discussed above.

Analysis

We agree with Petitioner's assertions.

Claim 2 requires "the disintegrable material comprises a plurality of *metallic powder particles*, each powder particle including a *particle core*, each particle core comprising a *core material* and a *metallic coating* layer disposed on the particle core and comprising a metallic coating material." Ex. 1003, 16:26–31 (emphases added).

Head teaches the claimed *tool* and that it is made of a dissolvable material. Ex. 1005, 3:52–54. Xu discloses downhole tools made of "a *powder metal compact*." Ex. 1008 ¶ 13 (emphasis added). Xu discloses that such a powder metal compact "includes a substantially-continuous, cellular

nanomatrix comprising a nanomatrix material" and "[t]he compact also includes a plurality of dispersed particles comprising a *particle core* material that comprises Mg, Al, Zn or Mn, or a combination thereof, dispersed in the nanomatrix and a solid-state bond layer extending throughout the nanomatrix between the dispersed particles." *Id.* (emphasis added). Xu further discloses "[e]ach of the metallic, *coated powder particles* 12 of powder 10 includes a *particle core* 14 and a *metallic coating layer* 16 disposed on the particle core 14." *Id.* ¶ 43 (emphases added). Thus, it is apparent that Xu teaches the elements of claim 2 lacking in Head's disclosure.

Holmes discloses a downhole tool made from sinterable (coalescable powder material) particles of a first reactive material (e.g., magnesium, aluminum, tin, tungsten, nickel, carbon steel, stainless steel, and combinations thereof) encased within a second reactive sinterable material (see aforementioned materials), where, in certain embodiments, the first reactive material is provided as a core and the second reactive material is a coating (shell) over the core. Ex. 1010 ¶¶ 3–5, 13–21, Figs. 4, 5. Thus, it is apparent that Holmes teaches the elements of claim 2 lacking in Head's disclosure.

For the reasons set forth above, Petitioner has carried its burden in showing claim 2 would have been obvious over Head and Xu or Holmes. The claim is unpatentable.

CLAIM 3

Claim 3 depends from claim 1 and further requires "the disintegrable material comprises a cellular nanomatrix comprising: a metallic nanomatrix

material; a metal matrix disposed in the cellular nanomatrix; and a disintegration agent." Ex. 1003, 16:32–37.

Petitioner's Position

Petitioner asserts that "Xu states that its 'powder compacts are made from coated metallic powders . . . that are dispersed within a cellular nanomatrix.' Ex.1008 (¶41); Ex.1001 (¶277). Xu's Figure 9 depicts this cellular nanomatrix, and corresponds with the '439 Figure 7." Pet. 69. Further, Petitioner illustrates that Xu and the '439 patent disclose the same cellular nanomatrix material for their disintegrable materials by reproducing, side-by-side for comparison, Xu's Figure 9 and the '439 patent's Figure 7, which, but for their reference number labeling and positioning of their "200 μm" scale reference, are identical photomicrographs. *Id.* at 70. Petitioner asserts that Xu teaches its cellular nanomatrix is composed of "[']various nanoscale metallic coating layers of metallic coating materials,' which are a metallic nanomatrix material." *Id.* (citing Ex.1008 ¶ 41; Ex. 1001 ¶ 279). Returning to Xu's Figure 9, Petitioner asserts it "depicts particles 214 formed from 'particle cores 14 dispersed in the cellular nanomatrix 216.' Ex.1008 (¶66). Xu describes particle cores 14 as being 'electrochemically active metals.' *Id*. (¶43); Ex.1001 (¶281)." *Id.* Finally, Petitioner asserts that "Xu teaches that '[c]ore material 18 may also include . . . non-metallic materials, or a combination thereof,' including ceramics. Ex.1008 (¶43); *see also id.* (¶48). POSA would understand the nanomatrix comprises a disintegration agent. Ex.1001 (¶283)." *Id.* at 71.

Petitioner asserts that, alternatively, "Holmes illustrates the matrix—including metals such as magnesium, aluminum, tin and tungsten—in Figures 2 and 3." *Id.* at 70 (citing Ex. 1010 ¶¶ 15–16). Petitioner further

asserts that "Holmes Figures 2-3 similarly illustrate metals disposed within a nanomatrix of reactive materials." *Id.* (citing Ex.1010, Figs. 2–3). Finally, Petitioner asserts "Holmes discloses a matrix including a 'second reactive material' such that 'the time to dissolve is controlled primarily by the second reactive material 22'." *Id* at 71 (citing Ex.1010 ¶ 15).

Patent Owner's Position

Patent Owner does not offer an argument specifically directed to claim 3 and obviousness over Head and Xu or Holmes. *See* PO Resp. 64–67. Instead, Patent Owner relies on its arguments on Petitioner's anticipation and obviousness challenges, generally, as discussed above.

Analysis

As discussed below, we agree with Petitioner's assertions.

Claim 3 requires "the disintegrable material comprises a *cellular nanomatrix* comprising: a *metallic nanomatrix material*; a *metal matrix* disposed in the cellular nanomatrix; and a *disintegration agent*." Ex. 1003, 16:32–37 (emphasis added). The '439 patent, in describing the above-quoted elements of claim 3, states:

> In some embodiments, the disintegrable material is a metal composite that includes a metal matrix disposed in a cellular nanomatrix and a disintegration agent. . . . An exemplary metal composite and method used to make the metal composite are disclosed in U.S. patent application Ser. Nos. **12/633,682**, . . . the disclosure of each of which patent application is incorporated herein by reference in its entirety.

Ex. 1003, 6:39–55 (emphasis added). U.S. application 12/633,628 is Xu, thus, for at least some relevant embodiments of the invention, Xu is indicated to be a disclosure. Ex. 1008, code (21). The question remains whether Xu discloses the claimed embodiment.

The ’439 patent describes that magnesium is a metal matrix material. Ex. 1003, 6:56–7:5. The ’439 patent describes that magnesium and magnesium alloys are active metals to be dispersed in a cellular nanomatrix, making them metallic nanomatrix materials. *Id*. at 5:48–6:10. The ’439 patent describes that metals, such as cobalt, copper, iron, nickel, tungsten, zinc, and combinations thereof, fatty acids, ceramic particles such as boron nitride, tungsten carbide, tantalum carbide, etc., are disintegration agents. *Id.* at 7:47–8:10. The ’439 patent states that its Figure 6 shows a cellular nanomatrix with a nanomatrix material and a metal matrix material, it is reproduced below:

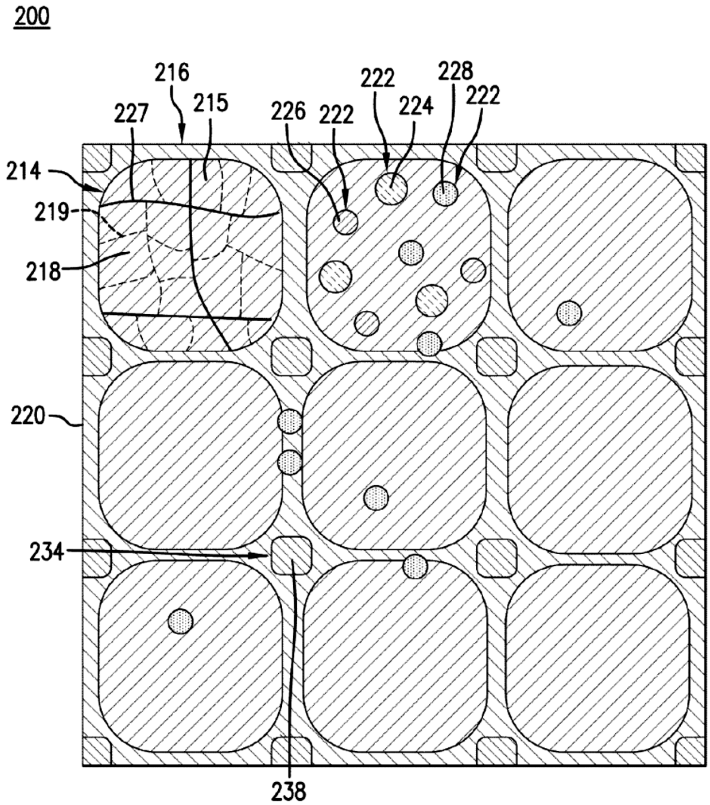

FIG.6

The ’439 patent’s Figure 6 shows “a cross sectional view of a disintegrable metal composite;” which is a metal composite 200 having a cellular nanomatrix 216 comprising a nanomatrix material 220 and a metal matrix 214 comprising a particle core material 218; Figure 6 also shows additive particles 222, 224. *Id.* at 1:54–55, 6:56–7:16. Although the ’439 patent describes that a disintegration agent can be included, it is not illustrated or referenced in Figure 6 (or any other figure). The ’439 patent indicates that its Figure 7, reproduced and discussed above at Section II.C, is a photomicrograph of a physical example of a metal composite 300 like that illustrated at Figure 6. *Id.* at 9:26–10:38; *see also* Ex. 1008, Fig. 9. Like Figure 6, the ’439 patent’s Figure 7 also does not show or identify a disintegration agent.

We reproduce the ’439 patent’s Figure 7 and Xu’s Figure 9, side by side, for comparison:

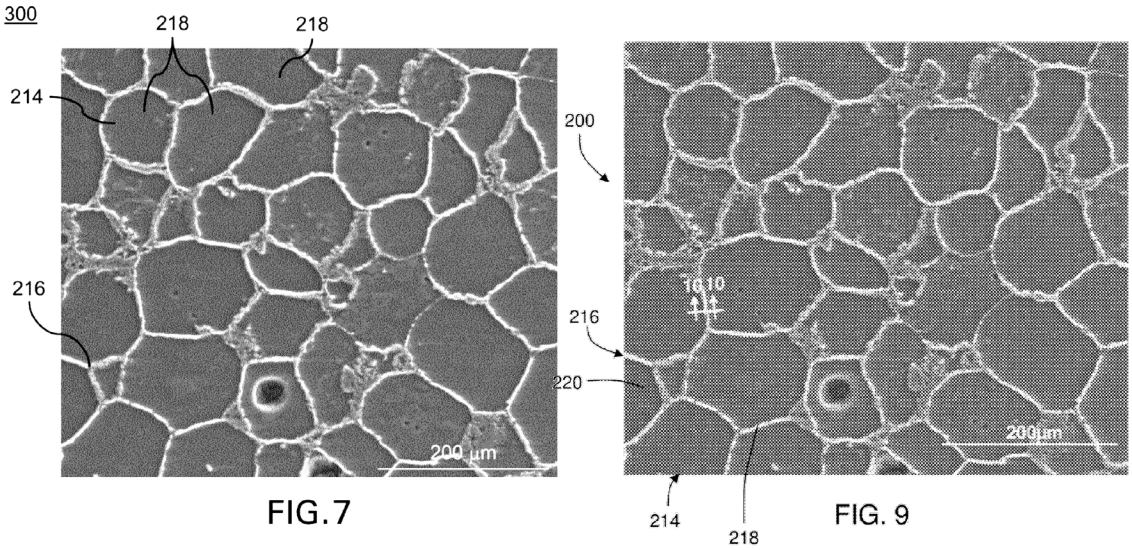

The ’439 patent’s Figure 7 is shown above-left and Xu’s Figure 9 is shown above-right. Each shows a “photomicrograph of an exemplary embodiment

of a disintegrable metal composite" and are visually identical, but for labeling. Ex. 1003, 1:55–56; Ex. 1008 ¶ 24. Xu discloses the same structure at its Figure 9 as does the '439 patent at its Figure 7. Ex. 1008, ¶¶ 63–66, Fig. 9. According to Xu, its Figure 9 shows a

> Powder compact 200 [that] includes a substantially-continuous, cellular nanomatrix 216 of a nanomatrix material 220 having a plurality of dispersed particles 214 dispersed throughout the cellular nanomatrix 216. The substantially continuous cellular nanomatrix 216 and nanomatrix material 220 formed of sintered metallic coating layers 16.

Id. ¶ 63. Xu teaches its cellular nanomatrix material can be pure metal or an alloy (e.g., Mg or an alloy thereof); teaches that its metallic nanomatrix material can be Mg, Al, Zn, or Mn. *See, e.g., id.* ¶¶ 51–57, 63, 66–68.

Xu does not expressly mention the term *disintegration agent. See generally id.* However, Xu does disclose including zinc, ceramic, glass or carbon, or pure Mg, in its core material and discloses a "metallic coating layer 16 [that] includes Al, Zn, Mn, Mg, Mo, W, Cu, Fe, Si, Ca, Co, Ta, Re, or Ni, or an oxide, nitride or a carbide thereof, or a combination of any of the aforementioned materials." *Id.* ¶¶ 14, 53. These materials substantially overlap with those the '439 patent identifies as suitable for a *disintegrating agent*. Thus, Xu teaches that its cellular nanomatrix includes a metallic nanomatrix material (magnesium), a metal matrix (magnesium or magnesium alloys) in the cellular nanomatrix, and a disintegration agent (*see* list above), configured as claimed.

Regarding Holmes, the reference does not use terminology such as matrix, nanomatrix, or metallic nanomatrix; however, Holmes does illustrate structures that resemble a matrix at its Figures 2–4, and these structures include magnesium reactive materials in a core and as a coating. Holmes

discloses its reactive materials may be magnesium, aluminum, tin, tungsten, nickel, and combinations thereof, but, it is unclear how such combinations of material are applied in Holmes. Ex. 1010 ¶ 14. Petitioner does not identify a *disintegration agent* in Holmes and it is not apparent, as it was in Xu, that Holmes teaches this claim element.

For the reasons set forth above, Petitioner has carried its burden in showing claim 3 would have been obvious over Head and Xu. The claim is unpatentable.

CLAIM 4

Claim 4 depends from claim 1 and further requires "the tool comprises at least a first material having a first rate of disintegration and a second material having a second rate of disintegration, the first and second rates of disintegration differing from each other." Ex. 1003, 16:38–42.

Petitioner's Position

Petitioner asserts the limitation of this claim is taught in that "Xu teaches a powder wherein the core material will provide a 'core chemical composition and the coating material 20 will be selected to provide a coating chemical composition and these chemical compositions will also be selected to differ from one another,'" which "'provide[s] different dissolution rates and selectable and controllable dissolution of powder compacts 200 that incorporate them making them selectably and controllably dissolvable.'" Pet. 71 (citing Ex. 1008 ¶ 52; Ex. 1001 ¶ 285–287).

Petitioner, alternatively, asserts that "Holmes teaches a composition with 'a core of the dissolvable downhole tool with a first reactive material, and coating the core with a second reactive material, the second reactive

material being significantly less reactive than the first reactive material.'" Pet 71–72 (citing Ex.1010 ¶ 5).

Patent Owner's Position

Patent Owner does not offer an argument specifically directed to claim 4 and obviousness over Head and Xu or Holmes. *See* PO Resp. 64–67. Instead, Patent Owner relies on its arguments on Petitioner's anticipation and obviousness challenges, generally, as discussed above.

Analysis

We agree with Petitioner's assertions.

Claim 4 requires "the tool comprises at least a first material having a first rate of disintegration and a second material having a second rate of disintegration, the first and second rates of disintegration differing from each other." Ex. 1003, 16:38–42. We agree with Petitioner that the identified portion of Xu discloses this subject matter. We also agree with Petitioner that the identified portion of Holmes likewise discloses this subject matter.

For the reasons set forth above, Petitioner has carried its burden in showing claim 4 would have been obvious over Head and Xu or Holmes. The claim is unpatentable.

CLAIM 5

Claim 5 depends from claim 4 (and thereby from claim 1) and further requires "the first material is arranged as a shell and the second material is arranged as a core surrounded by the shell." Ex. 1003, 16:43–45.

Petitioner's Position

Petitioner asserts that each of Xu and Holmes discloses that a first material can be provided as a shell and a second material can be provided as a core surrounded by the shell. Pet. 72 (citing Ex. 1001 ¶ 290; also citing

Pet. Section X.C). At the cited Petition Section X.C, Petitioner asserts that Xu's Figures 1 and 2 teach the claimed particle-core arrangement at reference number 18 (core) and 16/20 (coating), and that Holmes also teaches a core as its reference 18 and shell as its reference 22, shown at Figure 4 on a micro level in sintered particles, and shown at Figure 5 at a macro level as a tool. Pet. 59–60 (citing Ex. 1008 ¶ 43, Figs. 1, 2; Ex. 1001 ¶¶ 252–254; Ex. 1010 ¶¶ 5, 15, 21, Figs. 2, 5). Petitioner further asserts that "Holmes teaches that this can be either within the matrix (Figure 4), or on a macro level (Figure 5)." *Id.* at 72 (citing Ex. 1010, Figs. 4, 5).

Patent Owner's Position

Patent Owner does not offer an argument specifically directed to claim 5 and obviousness over Head and Xu or Holmes. *See* PO Resp. 64–67. Instead, Patent Owner relies on its arguments on Petitioner's anticipation and obviousness challenges, generally, as discussed above.

Analysis

We agree with Petitioner that the identified portion of Xu discloses the subject matter of claim 5, i.e., the two materials arranged as a core and a coating thereover. We also agree with Petitioner that the identified portion of Holmes likewise discloses this subject matter.

For the reasons set forth above, Petitioner has carried its burden in showing claim 5 would have been obvious over Head and Xu or Holmes. The claim is unpatentable.

CLAIM 6

Claim 6 depends from claim 4 (and thereby from claim 1) and further requires "the first rate of disintegration is slower than that of the second rate of disintegration." Ex. 1003, 16:46–48.

Petitioner's Position

Petitioner asserts "Xu teaches that the core material and coating material are different compositions, which provide different dissolution rates. Ex.1008 (¶52); Ex.1001 (¶293)" and "Holmes teaches the second being 'significantly less reactive than the first reactive material.' Ex.1010 (¶5); Ex.1001 (¶294)." Pet. 72.

Patent Owner's Position

Patent Owner does not offer an argument specifically directed to claim 6 and obviousness over Head and Xu or Holmes. *See* PO Resp. 64–67. Instead, Patent Owner relies on its arguments on Petitioner's anticipation and obviousness challenges, generally, as discussed above.

Analysis

We agree with Petitioner that the identified portion of Xu discloses the subject matter of claim 6, i.e., the two materials with different disintegration rates. We also agree with Petitioner that the identified portion of Holmes likewise discloses this subject matter.

For the reasons set forth above, Petitioner has carried its burden in showing claim 6 would have been obvious over Head and Xu or Holmes. The claim is unpatentable.

SUMMARY

For the reasons set forth above, Head and Xu or Holmes would have rendered the subject matter of claims 1–23 obvious; these claims are unpatentable.

F. Obviousness over Stout and Xu or Holmes Claims 1, 13, 19, and 21

Because independent claims 1, 13, 19, and 21 are so similar, we address them together as rendered obvious over Stout and Xu or Head. We have also discussed these claims and their limitations at length above.

Petitioner's Position

Petitioner asserts that Stout teaches a deformation system, as claimed, in that Stout discloses a set of seals 5, 6, 7, 8 and slips 4 that expand, i.e., deform, to engage a wellbore casing, similar to Head, as discussed above. Pet. 63–64, 81–82 (citing Ex. 1009 ¶¶ 17, 31–34, Figs. 1, 2; Ex. 1001 ¶ 232).

Petitioner asserts that Stout's upper seals 5, 6 and lower seals 7, 8, and also slip segments 4, are the claimed *deformable member*, and that these components have a *first set of dimensions* when in their running position and are deployed to a *second set of dimensions*, as claimed. *Id.* at 63–64 (citing Ex. 1009 ¶¶ 22, 31–32, 34, Fig. 1; Ex. 1001 ¶¶ 232–234).

Petitioner asserts that Stout teaches the claimed *tool* in disclosing cone surfaces 2, 3, which are wedges within the seals 5, 6, 7, 8, and slips 4 and, as claimed, function to impart a deforming force on these components (that are the analogous deformable member) to deform them from a first to a second set of dimensions to engage the surrounding wellbore casing. *Id.* at 64–66, 81–83 (citing Ex. 1009 ¶¶ 16, 17, 22, 23, 30–32, 34, Figs. 1, 2; Ex. 1001 ¶¶ 235, 237–240).

Regarding the *seal against* requirement of claims 13 and 21, Petitioner asserts "Stout discloses that when the packer is 'set' the slips penetrate the casing, and the seals 'make sufficient sealing contact' with the

inner diameter of the casing." *Id.* at 66, 77, 82–83 (citing Ex. 1009 ¶ 34, Figs. 2, 3; Ex. 1001 ¶¶ 242, 330–331).

Petitioner acknowledges that Stout does not expressly teach the claim element requiring "at least the portion of the tool that imparts the deforming force at least partially comprises a disintegrable material responsive to a selected fluid." Pet. 66. For such a teaching, Petitioner points to Xu or Holmes, which Petitioner combines with Stout. *Id.* at 66–68. Petitioner asserts that Xu teaches disintegrable materials responsive to a selected fluid, e.g., common wellbore fluids, and also asserts that Holmes teaches dissolvable materials to be used in downhole tools that dissolve in response to "typical well bore fluids, oil, water, mud and natural gas." *Id.* at 66 (citing Ex. 1008 ¶ 43; Ex. 1010 ¶¶ 14, 21; Ex. 1001 ¶¶ 251–257).

Petitioner asserts that the person of ordinary skill in the art would have been motivated to use Xu's or Holmes's materials for Stout's cone structures 2, 3 (the claimed *tool*) because an objective of Stout is to minimize mill-out requirements (time, cost, effort) for its devices and Xu's or Holmes's dissolving materials would accomplish this goal. Pet. 67. Petitioner asserts that each of Xu and Holmes teaches that its dissolvable materials could substitute for any traditional downhole components, for example, as Xu puts it, "'provide a unique and advantageous combination of mechanical strength properties'" and dissolvability. *Id.* (citing Ex. 1008 ¶ 41).

Petitioner asserts that the skilled artisan would have reasonably expected to successfully use Xu's or Holmes's materials for Stout's cones 2, 3 (for the same reasons discussed above regarding their use in Head's device). *Id.* at 67–68 (citing Ex. 1001 ¶¶ 264–269).

Patent Owner's Position

Patent Owner's primary argument is that the Petition was not particular enough in asserting its obviousness grounds. PO Resp. 64–65. We have addressed this argument above and concluded it is not persuasive.

Specific to the patentability challenge involving Stout, Patent Owner argues "[t]he Petition also lacks any legally sufficient showing of equivalence between Stout's cones and the '439 Patent's tools. Petitioner merely contends that Stout's cone surfaces impart a deforming force 'using a similar wedge structure.'" *Id.* at 66 (citing Pet. 64). Patent Owner argues Stout's cones are not equivalent to the '439 patent's *tool*. *Id.* at 67. We have addressed this "equivalence" argument above and concluded it is not persuasive. A "wedge," as discussed above, is one of the identical structures the '439 patent's Specification describes as corresponding to the claimed *tool* for performing its recited deforming function.

Analysis

We agree with Petitioner's assertions.

We agree with Petitioner's position that Stout, combined with Xu or Head, would have rendered claims 1, 13, 19, and 21 obvious.

Stout's Figures 1 and 2, as annotated by Petitioner, are reproduced below:

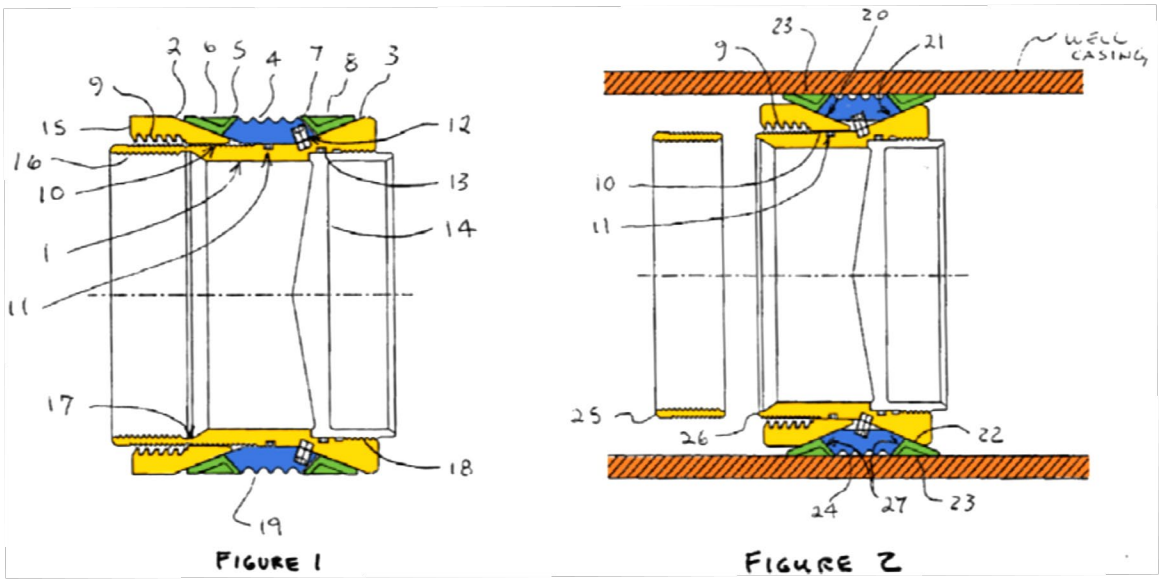

Pet. 66; Ex. 1009, Fig. 1. Stout's Figures 1 and 2 have already been described above (*see supra* Section II.G.) as showing Stout's downhole device in a "running position" and in a "set position" respectively (Ex. 1009, ¶¶ 22, 23), but Petitioner has annotated the figures with color to highlight how Stout's components meet the limitations of, at least, the '439 patent's independent claims (when the material for its cones 2, 3 is replaced with dissolvable material taught by Xu or Head).

Figure 1 above shows Stout's seal 11 components, with slip 4 in blue coloring and seal portions 5, 6, 7, 8 in green coloring; these components of Stout correlate to the *deformable member* of the claims because they deform from a first set of dimensions where the device is positionable in a wellbore, as shown in Figure 1, to a second set of dimensions where the device engages the casing of the wellbore, as shown in Figure 2. Pet. 62–66; Ex. 1009 ¶¶ 30–31. Figure 1 above also shows the upper cone 2 and cone surface 3 in orange coloring; these components correspond to the

deformation tool of the claims because they are wedges, or ramps, or cones, they are within the seal components, and they function to impart a deforming force on the seal components to deform them as just described. Pet. 62–66; Ex. 1009 ¶¶ 30–33. Figure 2 shows these same components annotated with the same coloring inside a wellbore casing, which is colored dark orange, where the upper cone 2 and cone surface 3 are brought together by a setting tool (not shown) and have expanded the seal components 4, 5, 6, 7, 8 to contact the internal diameter of the well casing so that they "make[] sufficient sealing contact with the [internal diameter] of the casing." Pet. 62–66; Ex. 1009 ¶¶ 34–36.

As discussed above, independent claims 13 and 21 require that the deformable member seal against the structure after deformation. Ex. 1003, 17:10–12, 18:25–26. As illustrated by Stout's Figure 2, above, upon deformation by the cones 2, 3, Stout's seal components 5, 6, 7, 8 and slips 4 seal against the wellbore casing. Ex. 1009, Fig. 2. Stout discloses that it's "tool is provided for sealing," calls the relevant components a "seal system" and "seals," and states that "when pressure is applied from below the packer, the cone surface 3 acts on the seal 7 and 8 and the slip segment 4 to further energize tooth engagement and the seals. Pressure from below acts on seals 7 and 8 to achieve a better seal." *Id.* ¶¶ 16, 17, 36. Thus, the *seal against* requirement of the claims is taught by Stout.

As identified by Petitioner, Stout does not disclose that its cone components, i.e., the analogous *tool* as claimed, are made of a *disintegrable material*. Stout discloses that one of the advantages of its device is that it minimizes mill-out requirements by providing a shorter device than conventionally used and by using frangible materials for certain components

of its device (e.g., its disc or flapper). Ex. 1009 ¶¶ 17–21. Although Stout does not expressly indicate its cone components (or its seal components) are made of similarly frangible, or otherwise disintegrable, materials, Stout does state that "[t]he materials of the packer can be optimized to reduce mill-out time." *Id.* ¶ 21. This is an express suggestion for the skilled artisan to optimize any of Stout's materials for this purpose, as known in the art.

As discussed above regarding their combination with Head, Xu and Holmes each teaches dissolvable/disintegrable materials that can be used for components of downhole tools. *See supra* Section III.E.

Xu discloses, e.g., magnesium-based nanomatrix, materials that are "useful in making a wide variety of degradable or disposable articles, including various downhole tools and components" for use in oil and natural gas wells, and states that "wellbore components and tools made of such materials hav[e] the mechanical properties necessary to perform their intended function and then [be] removed from the wellbore by controlled dissolution using wellbore fluids" and that this "is very desirable." Ex. 1008, Abstract, ¶¶ 9, 12. Thus, the skilled artisan would have been motivated to use Xu's materials for Stout's cones 2, 3 and would have reasonably expected to successfully do so.

Holmes discloses "a dissolvable downhole tool" made of "at least two materials" where at least one of, or both of, the materials "is a reactive material," such as a magnesium or magnesium-based material, that dissolves in reaction to "typical wellbore fluids" such as "oil, water, mud and natural gas." Ex. 1010, Abstract, ¶¶ 13–14. Holmes discloses that such reactivity and dissolvability is desired when the "continued presence" of the tool "become[s] undesirable." *Id.* ¶ 13. Holmes discloses that its dissolvable

downhole tools can be simple tools, such "as a tripping ball," or can be components of other devices, such as "ball seats." *Id.* Thus, the skilled artisan would have been motivated to use Holmes's materials for Stout's cones 2, 3 and would have reasonably expected to successfully do so.

For the reasons set forth above, Petitioner has carried its burden in showing claims 1, 13, 19, and 21 would have been obvious over Stout and Xu or Holmes. The claims are unpatentable.

CLAIM 2

Petitioner's Position

But for the substitution of the teachings of Stout, discussed above, Petitioner's position regarding claim 2's obviousness over Stout and Xu or Holmes is generally the same as that regarding Head and Xu or Holmes, as discussed above. Pet. 68–69; *see also supra* Section III.E. As noted above, Xu or Holmes is also combined with Stout for teaching a disintegrable material to be used in Stout's cones 2, 3, which equate to the '439 patent's independent claims' *tool*.

Patent Owner's Position

Patent Owner does not offer an argument specifically directed to claim 2 and obviousness over Stout and Xu or Holmes. *See* PO Resp. 64–67. Instead, Patent Owner relies on its arguments on Petitioner's obviousness challenges, generally, as discussed above.

Analysis

We agree with Petitioner's assertions.

We conclude Stout and Xu teach and render obvious the subject matter of claim 2 for the same reasons set forth above regarding Stout and Xu's combination with respect to claim 1, and regarding Head and Xu's

teachings respective of claim 2. Further, we conclude Stout and Holmes teach and render obvious the subject matter of claim 2 for the same reasons set forth above regarding Stout and Holmes's combination with respect to claim 1, and regarding Head and Holmes's teachings respective of claim 2.

For these reasons, Petitioner has carried its burden in showing claim 2 would have been obvious over Stout and Xu or Holmes. The claim is unpatentable.

CLAIM 3

Petitioner's Position

But for the substitution of the teachings of Stout, discussed above, Petitioner's position regarding claim 3's obviousness over Stout and Xu or Holmes is generally the same as that regarding Head and Xu or Holmes, as discussed above. Pet. 69–71; *see also supra* Section III.E. As noted above, Xu or Holmes is also combined with Stout for teaching a disintegrable material to be used in Stout's cones 2, 3, which equate to the '439 patent's independent claims' *tool*.

Patent Owner's Position

Patent Owner does not offer an argument specifically directed to claim 3 and obviousness over Stout and Xu or Holmes. *See* PO Resp. 64–67. Instead, Patent Owner relies on its arguments on Petitioner's obviousness challenges, generally, as discussed above.

Analysis

We conclude Stout and Xu teach and render obvious the subject matter of claim 3 for the same reasons set forth above regarding Stout and Xu's combination with respect to claim 1, and regarding Head and Xu's teachings respective of claim 3.

For these reasons, Petitioner has carried its burden in showing claim 3 would have been obvious over Stout and Xu. The claim is unpatentable.

CLAIM 4

Petitioner's Position

But for the substitution of the teachings of Stout, discussed above, Petitioner's position regarding claim 4's obviousness over Stout and Xu or Holmes is generally the same as that regarding Head and Xu or Holmes, as discussed above. Pet. 71–72; *see also supra* Section III.E. As noted above, Xu or Holmes is also combined with Stout for teaching a disintegrable material to be used in Stout's cones 2, 3, which equate to the '439 patent's independent claims' *tool*.

Patent Owner's Position

Patent Owner does not offer an argument specifically directed to claim 4 and obviousness over Stout and Xu or Holmes. *See* PO Resp. 64–67. Instead, Patent Owner relies on its arguments on Petitioner's obviousness challenges, generally, as discussed above.

Analysis

We conclude Stout and Xu teach and render obvious the subject matter of claim 4 for the same reasons set forth above regarding Stout and Xu's combination with respect to claim 1, and regarding Head and Xu's teachings respective of claim 4. Further, we conclude Stout and Holmes teach and render obvious the subject matter of claim 4 for the same reasons set forth above regarding Stout and Holmes's combination with respect to claim 1, and regarding Head and Holmes's teachings respective of claim 4.

For these reasons, Petitioner has carried its burden in showing claim 4 would have been obvious over Stout and Xu or Holmes. The claim is unpatentable.

CLAIM 5

Petitioner's Position

But for the substitution of the teachings of Stout, discussed above, Petitioner's position regarding claim 5's obviousness over Stout and Xu or Holmes is generally the same as that regarding Head and Xu or Holmes, as discussed above. Pet. 72; *see also supra* Section III.E. As noted above, Xu or Holmes is also combined with Stout for teaching a disintegrable material to be used in Stout's cones 2, 3, which equate to the '439 patent's independent claims' *tool*.

Patent Owner's Position

Patent Owner does not offer an argument specifically directed to claim 5 and obviousness over Stout and Xu or Holmes. *See* PO Resp. 64–67. Instead, Patent Owner relies on its arguments on Petitioner's obviousness challenges, generally, as discussed above.

Analysis

We conclude Stout and Xu teach and render obvious the subject matter of claim 5 for the same reasons set forth above regarding Stout and Xu's combination with respect to claim 1, and regarding Head and Xu's teachings respective of claim 5. Further, we conclude Stout and Holmes teach and render obvious the subject matter of claim 5 for the same reasons set forth above regarding Stout and Holmes's combination with respect to claim 1, and regarding Head and Holmes's teachings respective of claim 5.

For these reasons, Petitioner has carried its burden in showing claim 5 would have been obvious over Stout and Xu or Holmes. The claim is unpatentable.

CLAIM 6

Petitioner's Position

But for the substitution of the teachings of Stout, discussed above, Petitioner's position regarding claim 6's obviousness over Stout and Xu or Holmes is generally the same as that regarding Head and Xu or Holmes, as discussed above. Pet. 72; *see also supra* Section III.E. As noted above, Xu or Holmes is also combined with Stout for teaching a disintegrable material to be used in Stout's cones 2, 3, which equate to the '439 patent's independent claims' *tool*.

Patent Owner's Position

Patent Owner does not offer an argument specifically directed to claim 6 and obviousness over Stout and Xu or Holmes. *See* PO Resp. 64–67. Instead, Patent Owner relies on its arguments on Petitioner's obviousness challenges, generally, as discussed above.

Analysis

We conclude Stout and Xu teach and render obvious the subject matter of claim 6 for the same reasons set forth above regarding Stout and Xu's combination with respect to claim 1, and regarding Head and Xu's teachings respective of claim 6. Further, we conclude Stout and Holmes teach and render obvious the subject matter of claim 6 for the same reasons set forth above regarding Stout and Holmes's combination with respect to claim 1, and regarding Head and Holmes's teachings respective of claim 6.

For these reasons, Petitioner has carried its burden in showing claim 6 would have been obvious over Stout and Xu or Holmes. The claim is unpatentable.

CLAIM 7

Petitioner's Position

Petitioner asserts that Stout teaches the claimed *ratcheting or locking feature between the tool and the member for maintaining the tool and the member in an engaged state after actuation of the tool* limitation of claim 7 in disclosing "'body lock ring 9 ratchets on mandrel 1 until the slip segments and seals are fully energized'" and because, once set, "'[l]ock ring 9 will not allow reverse movement to occur; therefore the packer is locked in the 'set' position.'" Pet. 73 (citing Ex. 1009 ¶ 35; Ex. 1001 ¶¶ 297–298).

Patent Owner's Position

Patent Owner does not offer an argument specifically directed to claim 7 and obviousness over Stout and Xu or Holmes. *See* PO Resp. 64–67. Instead, Patent Owner relies on its arguments on Petitioner's obviousness challenges, generally, as discussed above.

Analysis

Upon our review of Stout, we conclude Petitioner has not shown how it teaches *a ratcheting or locking feature* between its cones 2, 3, the claimed *tool*, and its seal elements 5, 6, 7, 8 and slips 4, the claimed *deformable member*, as required by claim 7. The physical interaction shown between these two components of Stout is featureless, but for a rotational lock pin 12, which Stout discloses only as assisting in positioning the slip segments around the mandrel. *See* Ex. 1009 ¶ 31.

For this reason, we disagree with Petitioner's assertions and conclude claim 7 would not have been obvious over Stout and Xu or Holmes.

CLAIM 8

Petitioner's Position

Petitioner asserts that Stout discloses a "hydraulic setting cylinder" can be included so that it "'pushes on [the] surface 15 [of cone 2] and pulls on thread 16'" to set the packer, i.e., force the cones 2, 3 against the seals 5, 6, 7, 8 and slips 4 to deform them outward against the wellbore casing. Pet. 73–74 (citing Ex. 1009 ¶¶ 20, 34; Ex. 1001 ¶ 300).

Patent Owner's Position

Patent Owner does not offer an argument specifically directed to claim 8 and obviousness over Stout and Xu or Holmes. *See* PO Resp. 64–67. Instead, Patent Owner relies on its arguments on Petitioner's obviousness challenges, generally, as discussed above.

Analysis

We agree with Petitioner's assertions. As argued by Petitioner, Stout teaches its cones 2, 3 can be actuated by hydraulic pressure, as claimed. Thus, we conclude Stout and Xu or Stout and Holmes teach and render obvious the subject matter of claim 8.

For these reasons, Petitioner has carried its burden in showing claim 8 would have been obvious over Stout and Xu or Holmes. The claim is unpatentable.

CLAIM 9

Petitioner's Position

But for the substitution of the teachings of Stout, discussed above, Petitioner's position regarding claim 9's obviousness over Stout and Xu or

Holmes is generally the same as that regarding Head and Xu or Holmes, as discussed above. Pet. 74; *see also supra* Section III.E. As noted above, Xu or Holmes is also combined with Stout for teaching a disintegrable material to be used in Stout's cones 2, 3, which equate to the '439 patent's independent claims' *tool*.

Patent Owner's Position

Patent Owner does not offer an argument specifically directed to claim 9 and obviousness over Stout and Xu or Holmes. *See* PO Resp. 64–67. Instead, Patent Owner relies on its arguments on Petitioner's obviousness challenges, generally, as discussed above.

Analysis

We conclude Stout and Xu teach and render obvious the subject matter of claim 9 for the same reasons set forth above regarding Stout and Xu's combination with respect to claim 1, and regarding Head and Xu's teachings respective of claim 9. Further, we conclude Stout and Holmes teach and render obvious the subject matter of claim 9 for the same reasons set forth above regarding Stout and Holmes's combination with respect to claim 1, and regarding Head and Holmes's teachings respective of claim 9.

For these reasons, Petitioner has carried its burden in showing claim 9 would have been obvious over Stout and Xu or Holmes. The claim is unpatentable.

CLAIM 10

Petitioner's Position

Petitioner asserts Stout's rotational lock pins 12, mentioned above, assist in positioning the slip segments around the mandrel, which supports cones 2, 3, and seals 5, 6, 7, 8, and slips 4, and asserts that, thereby, the

deformable member of Stout (the seals 5, 6, 7, 8 and slips 4) are temporarily secured to the support member (mandrel 1). Pet. 74 (citing Ex. 1009 ¶ 31; Ex. 1001 ¶ 308).

Patent Owner's Position

Patent Owner does not offer an argument specifically directed to claim 10 and obviousness over Stout and Xu or Holmes. *See* PO Resp. 64–67. Instead, Patent Owner relies on its arguments on Petitioner's obviousness challenges, generally, as discussed above.

Analysis

We agree with Petitioner's position. Stout discloses that "[r]otational lock pin 12 is either attached to, or part of mandrel 1. The number of rotational pins is equal to the number of gaps between slip segments 4. The rotational pins assist in positioning the slip segments equally around the mandrel" when the device is in a "running position." Ex. 1009 ¶¶ 31–32. Once the device is positioned where it is to be transitioned to the "set position," where the seal components 5, 6, 7, 8 and slips 4 are expanded by the cones 2, 3 to engage the wellbore casing, the lock pin 12 must allow relative movement between these components so that the cones 2, 3 can deform the seal 5, 6, 7, 8 and slips 4. Thus, the claim elements are met by Stout's disclosure.

For these reasons, Petitioner has carried its burden in showing claim 10 would have been obvious over Stout and Xu or Holmes. The claim is unpatentable.

CLAIMS 11, 12, AND 20

Each of claims 11, 12 and 20 require that the claimed deformable member be made of a disintegrable material, at least in part, or be disintegrated. Ex. 1003, 16:62–64, 18:10–11.

Petitioner's Position

Petitioner asserts "POSA would be motivated to make Stout's cones 2, 3 out of disintegrable material and [would] have a reasonable expectation of success in doing so, POSA would be motivated to make the slips 4 and seals 5-8 out of disintegrable material taught in Xu or Holmes, and would reasonably expect to succeed in doing so" because a "POSA would recognize that the less material left behind in the well, the less expensive, time-consuming milling was required." Pet. 75–76, 81 (citing Ex. 1001 ¶¶ 311–315, 320).

Patent Owner's Position

Patent Owner does not offer an argument specifically directed to claims 11, 12, or 20 and obviousness over Stout and Xu or Holmes. *See* PO Resp. 64–67. Instead, Patent Owner relies on its arguments on Petitioner's obviousness challenges, generally, as discussed above.

Analysis

We agree with Petitioner's position. As argued by Petitioner and as discussed above (regarding the independent claims), Stout teaches its components, for example, its seal and slip components, can be optimized to minimize milling requirements and Xu and Holmes teach materials suited to this purpose. Therefore, it would have been obvious in view of Stout and Xu or Holmes to make Stout's deformable member of a disintegrable

material, as claimed. Thus, we conclude Stout and Xu or Stout and Holmes teach and render obvious the subject matter of claims 11, 12, and 20.

For these reasons, Petitioner has carried its burden in showing claims 11, 12, and 20 would have been obvious over Stout and Xu or Holmes. The claims are unpatentable.

CLAIM 14

Petitioner's Position

Petitioner asserts that Stout discloses that the "deformable member includes a seal element" as discussed above regarding claim 13. Pet. 77 (citing Ex. 1009, Fig. 2).

Patent Owner's Position

Patent Owner does not offer an argument specifically directed to claim 14 and obviousness over Stout and Xu or Holmes. *See* PO Resp. 64–67. Instead, Patent Owner relies on its arguments on Petitioner's obviousness challenges, generally, as discussed above.

Analysis

We agree with Petitioner's assertion. It is apparent from Stout's disclosure that its *deformable member*, i.e., the seal 5, 6, 7, 8 and slip 4 components include *seal elements*, as claimed. *See, e.g.*, Ex. 1009, Figs. 1, 2. Thus, the claim elements are met by Stout's disclosure.

For these reasons, Petitioner has carried its burden in showing claim 14 would have been obvious over Stout and Xu or Holmes. The claim is unpatentable.

CLAIM 15

Petitioner's Position

Petitioner asserts that "Stout teaches a packer body and radially surrounding cone, slip and seal system 'that seals and engages the surrounding casing or other tubular member.' *Id*. (¶17). Figures 1 and 2 show the casing extending radially outward from the packer. *Id*. (Figs. 1, 2)." Pet. 78.

Patent Owner's Position

Patent Owner does not offer an argument specifically directed to claim 15 and obviousness over Stout and Xu or Holmes. *See* PO Resp. 64–67. Instead, Patent Owner relies on its arguments on Petitioner's obviousness challenges, generally, as discussed above.

Analysis

We agree with Petitioner's assertion. It is apparent from Stout's disclosure that its *deformable member*, i.e., the seal 5, 6, 7, 8 and slip 4 components, engage with a surrounding *tubular* wellbore *casing*, which is a *tubular*, a *casing*, or a *tubing structure radially outwardly positioned* respective of the tool and deformable member, as claimed. *See, e.g.*, Ex. 1009, Figs. 1–3. Thus, the claim elements are met by Stout's disclosure.

For these reasons, Petitioner has carried its burden in showing claim 15 would have been obvious over Stout and Xu or Holmes. The claim is unpatentable.

CLAIMS 16 AND 22

Both claims 16 and 22 require that the tool be a plug and that it and the seal element together fluidly isolate areas in the structure on opposite sides of the tool. Ex. 1003, 17:19–22, 18:28–31.

Petitioner's Position

Petitioner asserts:

> Stout discloses that the packer (including the cones) "can utilize a fixed frangible disc or a flapper device to serve as a bridge plug, frac plug, or frac disc-type of component." Ex.1009 (¶20). When set, "[s]ufficient force is placed on the slips and cones to achieve tooth penetration and store seal compression," and the seals are compressed into the casing. Ex.1009 (¶34). The cones, slips and seals act together. Ex.1001 (¶344-46). Stout's packer isolates areas in the casing on opposite sides of the cones, such that "[e]very time a zone is treated, a packer can be set, the formation treated, and then go to another zone up the hole if desired." Ex.1009 (¶40).

Pet. 78, 83.

Patent Owner's Position

Patent Owner does not offer an argument specifically directed to claims 16 or 22 and obviousness over Stout and Xu or Holmes. *See* PO Resp. 64–67. Instead, Patent Owner relies on its arguments on Petitioner's obviousness challenges, generally, as discussed above.

Analysis

We agree with Petitioner's position. Comparing Stout's disclosed device to the plug devices described in the '439 patent's Specification as within the scope of this claim, we conclude they are the same or, at least, obvious in view of one another. We reproduce Stout's Figure 2 and the '439 patent's Figure 12 below, side-by-side:

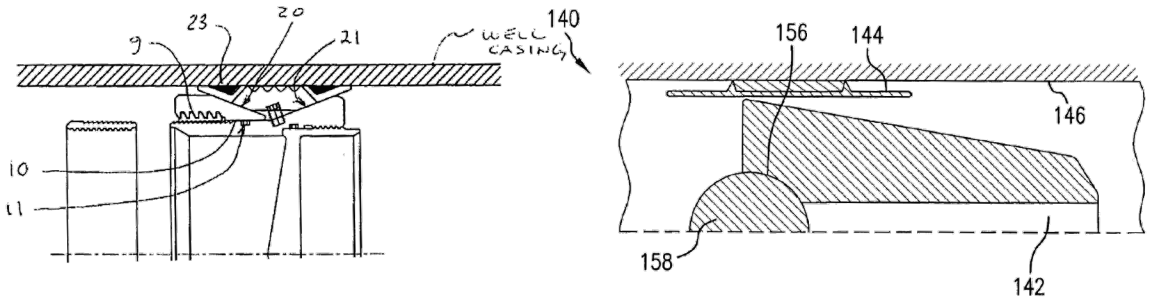

FIG.12

Stout's Figure 2, which we have cropped in half to better replicate the view provided by the illustration shown in the '439 patent's Figure 12, is shown above-left. The '439 patent's Figure 12 is shown above-right. Both show cross-sectioned views through half, or a portion, of a downhole device in a wellbore casing, where the device includes a radially outermost member (elements 20, 21, 23 of Stout's Figure 2 and element 144 of the '439 patent) engaging the casing, interior of that portion, a tool (unlabeled cone elements (2, 3) of Stout and element 142 of the '439 patent) that deformed the outermost member to engage the casing, and in the interior of the tool a device (unlabeled disk (14) or flapper of Stout and ball 158 of the '439 patent) for closing an internal bore of the device. *See* Ex. 1009 ¶¶ 16–20, 30–36, Figs. 1, 2; Ex. 1003, 5:21–47, Fig. 12.

Stout describes this arrangement of components as a packer that seals the wellbore and performs as a plug to isolate zones therein. Ex. 1009 ¶¶ 16–20, 40. Thus, the claim elements are met by Stout's disclosure.

For these reasons, Petitioner has carried its burden in showing claims 16 and 22 would have been obvious over Stout and Xu or Holmes. The claims are unpatentable.

CLAIM 17

Petitioner's Position

Petitioner asserts that Stout's slip segments have teeth 19, which grip the casing wall to prevent the packer device from moving, in use. Pet. 79 (citing Ex. 1009 ¶ 31; Ex. 1001 ¶¶ 349–350). Petitioner, thus, asserts slip elements 4 of Stout contain a gripping element, as claimed. *Id.*

Patent Owner's Position

Patent Owner does not offer an argument specifically directed to claim 17 and obviousness over Stout and Xu or Holmes. *See* PO Resp. 64–67. Instead, Patent Owner relies on its arguments on Petitioner's obviousness challenges, generally, as discussed above.

Analysis

We agree with Petitioner's assertion. It is apparent from Stout's disclosure that its *deformable member*, i.e., the seal 5, 6, 7, 8 and slip 4 components includes *a gripping element*, as claimed. *See, e.g.*, Ex. 1009, Figs. 1, 2. The teeth of the slip 4 satisfy this element. Thus, the claim element is met by Stout's disclosure.

For these reasons, Petitioner has carried its burden in showing claim 17 would have been obvious over Stout and Xu or Holmes. The claim is unpatentable.

CLAIM 18

Petitioner's Position

Petitioner asserts "In Stout, the teeth 19 of slip segments 4 'grip the wall and prevent the packer from moving relative to the casing' and furthermore 'prevent the packer from moving relative to the casing.' Ex.1009 (¶31); Ex.1001 (¶353)." Pet. 79.

Patent Owner's Position

Patent Owner does not offer an argument specifically directed to claim 18 and obviousness over Stout and Xu or Holmes. *See* PO Resp. 64–67. Instead, Patent Owner relies on its arguments on Petitioner's obviousness challenges, generally, as discussed above.

Analysis

Claim 18 requires "the gripping element also seals the deformable member against the structure." Ex. 1003, 17:26–28. Preventing the packer from moving is not the same as sealing. We discern no teaching in Stout, Xu, or Holmes, identified by Petitioner, of a gripping element, e.g., something like the teeth of Stout's slips, that seals. Therefore, we disagree with Petitioner that Stout and Xu or Holmes teaches the limitation of claim 18.

CLAIM 23

Petitioner's Position

Petitioner asserts that "Stout teaches its packer can 'serve as a bridge plug, frac plug, or frac disc-type of component,' such that '[e]very time a zone is treated, a packer can be set, the formation treated, and then go to another zone up the hole if desired.' Ex.1009 (¶¶20, 40). Stout's packer therefore isolates two zones while an operator fractures one of the zones. Ex.1001 (¶389)." Pet. 83–84.

Patent Owner's Position

Patent Owner does not offer an argument specifically directed to claim 23 and obviousness over Stout and Xu or Holmes. *See* PO Resp. 64–67. Instead, Patent Owner relies on its arguments on Petitioner's obviousness challenges, generally, as discussed above.

Analysis

Claim 23, which depends from claim 22 and thereby from claim 21, requires "fracturing a selected one of the zones while the zones are isolated from each other." Ex. 1003, 18:32–34. We agree with Petitioner's assertion that Stout teaches such a step. Stout's disclosure is directed to a downhole tool for zonal isolation in oil and gas wells, to protect tubulars from well pressures, i.e., "frac plugs." Ex. 1009 ¶¶ 3–6, 8. Stout's devices are intended to maintain a seal for high temperature and pressure applications. *Id.* ¶ 18. Stout discloses:

> FIG. 7 shows well casing 39 in a formation 43. The well casing 39 has two sets of perforations 41 and two packers 40 positioned between the perforations. A work string 42 places fluid, acid or proppant, into the formation. The packer 40 forces the fluid into the formation. Every time a zone is treated, a packer can be set, the formation treated, and then go to another zone up the hole if desired. When all zones are treated, the packers can be milled out prior to production. If milling is not desired, the frangible disc or flapper packer configuration can be used.

Id. ¶ 40. Thus, the claim element is met by Stout's disclosure.

For these reasons, Petitioner has carried its burden in showing claim 23 would have been obvious over Stout and Xu or Holmes. The claim is unpatentable.

G. STARR'S SHORTCOMINGS

Petitioner asserts Starr anticipates claims 1 and 7–23 and, when combined with Xu or Head, renders obvious claims 1–23. Pet. 43–84. We are not persuaded.

Every claim requires that "at least the portion of the tool that imparts the deforming force at least partially comprises a disintegrable material responsive to a selected fluid." Ex. 1003, 16:23–25 (claim 1), 17:7–10

(claim 13), 18:3–5 (claim 19), 18:20–22 (claim 21). We conclude Starr does not disclose or teach such a limitation.

Starr discloses "a dissolvable downhole tool 100" or 200. Ex. 1007, 3:8–9, 3:39–41, Fig. 1–3. Starr discloses its dissolvable downhole tool is a frac plug and has slips 240, a mechanical slip body 245, and a sealing element 232, 234, 236. *Id.* at 3:36–54. Starr discloses that this packer element is set against a casing "in a conventional manner, thereby isolating zone A, as depicted in FIG. 3." *Id.* at 4:45–49. This is the extent of Starr's teachings as to how these components work.

Starr discloses that

> At least some of the components comprising the frac plug 200 are formed from materials that dissolve when exposed to a chemical solution, an ultraviolet light, a nuclear source, or a combination thereof. These components may be formed of any dissolvable material that is suitable for service in a downhole environment and that provides adequate strength to enable proper operation of the plug 200.

Id. at 3:60–67. This is the extent to which Starr discloses components of its device are dissolvable or disintegrable. Thus, Starr does not teach its mechanical slip body 245, which would be analogous to the claimed *tool*, is disintegrable at all. Considering the Petitioner's obviousness ground including Starr, Petitioner makes no effort to explain how the references are combined, why they would be combined, or why the skilled artisan would expect to successfully do so.

For these reasons, we are not persuaded by Petitioner's assertions regarding Starr rendering the claims of the '439 patent unpatentable.

IV. PATENT OWNER'S MOTION TO EXCLUDE

Patent Owner moved to exclude Exhibit 1051, Exhibit 1052, Exhibit 1053, Exhibit 1054, Exhibit 1060, and Exhibit 1061, generally, on hearsay and authentication grounds under Federal Rules of Evidence 801(c), 802, and 901(a). Paper 39; *see also* Paper 33.

Our conclusions in this final decision do not rely upon and we did not consider any of the materials that Patent Owner seeks to exclude. Accordingly, Patent Owner's Motion to Exclude is *denied as moot*.

V. CONCLUSION

Petitioner has demonstrated that claims 1–23 of the '439 patent would have been either anticipated under 35 U.S.C. § 102(b) by Head or obvious under 35 U.S.C. § 103(a) over: (1) Head and Xu, (2) Head and Holmes, (3) Stout and Xu, or (4) Stout and Holmes, as discussed above.

In summary, on Petitioner's unpatentability challenges:[12]

Claims	35 U.S.C. §	Basis	Claims Shown Unpatentable	Claims Not Shown Unpatentable
1, 7–23	102(b)	Head	1, 7–23	
1, 7–23	102(b)	Starr		1, 7–23
1–23	103(a)	Head, Xu	1–23	
1–23	103(a)	Head, Holmes	1, 2, 4–23	3
1–23	103(a)	Starr, Xu		1–23
1–23	103(a)	Starr, Holmes		1–23

[12] Should Patent Owner wish to pursue amendment of the challenged claims in a reissue or reexamination proceeding subsequent to the issuance of this decision, see the April 2019 *Notice Regarding Options for Amendments by Patent Owner Through Reissue or Reexamination During a Pending AIA Trial Proceeding*. *See* 84 Fed. Reg. 16654 (Apr. 22, 2019). If Patent Owner chooses to file a reissue application or a request for reexamination of the challenged patent, Patent Owner has a continuing obligation to notify the Board in updated mandatory notices. *See* 37 C.F.R. § 42.8(a)(3), (b)(2).

1–23	103(a)	Stout, Xu	1–6, 8–17, 19–23	7, 18
1–23	103(a)	Stout, Holmes	1, 2, 4–6, 8–17, 19–23	3, 7, 18
Overall Outcome:			1–23	

ORDER

Accordingly, it is hereby:

ORDERED that Petitioner has demonstrated by a preponderance of the evidence that claims 1–23 of the ’439 patent are *unpatentable*;

FURTHER ORDERED that, because this is a Final Written Decision, any party to the proceeding seeking judicial review of the decision must comply with the notice and service requirements of 37 C.F.R. § 90.2; and

FURTHER ORDERED that Patent Owner’s Motion to Exclude is *dismissed*.

For PETITIONER:

Gregg LoCascio
Noah Frank
KIRKLAND & ELLIS LLP
Gregg.locascio@kirkland.com
Noah.frank@kirkland.com

For PATENT OWNER:

Eagle Robinson
Mark Garrett
Jeremy Albright
Thomas Owens
NORTON ROSE FULBRIGHT US LLP
Eagle.robinson@nortonrosefulbright.com
Mark.garrett@nortonrosefulbright.com
Jeremy.albright@nortonrosefulbright.com
Tom.owens@nortonrosefulbright.com