Trials@uspto.gov
571.272.7822

Paper 56
Entered: June 18, 2020

UNITED STATES PATENT AND TRADEMARK OFFICE

BEFORE THE PATENT TRIAL AND APPEAL BOARD

OCULAR THERAPEUTIX, INC.,
Petitioner,

v.

MATI THERAPEUTICS, INC.,
Patent Owner.

IPR2019-00448
Patent 9,849,082 B2

Before ERICA A. FRANKLIN, GRACE KARAFFA OBERMANN, and RYAN H. FLAX, *Administrative Patent Judges*.

FLAX, *Administrative Patent Judge*.

JUDGMENT
Final Written Decision
Determining All Challenged Claims Unpatentable
Denying Patent Owner's Motion to Strike
Dismissing-In-Part and Denying-In-Part Patent Owner's Motion to Exclude
Denying Petitioner's Motion to Exclude
35 U.S.C. § 318(a);37 C.F.R. § 42.64

I. INTRODUCTION

Mati Therapeutics, Inc. ("Patent Owner") is the owner of U.S. Patent No. 9,849,082 B2 (Ex. 1001, "the '082 patent"). Paper 5, 2. Ocular Therapeutix, Inc. ("Petitioner") filed a Petition requesting *inter partes* review of claims 1–23 of the '082 patent. Paper 3 ("Pet."). We instituted trial on June 26, 2019. Paper 8 ("Institution Decision").

Patent Owner filed a Response to the Petition. Paper 21 ("PO Resp."). Petitioner subsequently filed a Reply, to which Patent Owner responded with a Sur-reply. Papers 30 ("Pet. Reply"), 37 ("PO Sur-reply").

A final hearing was held where the parties presented oral argument in support of their positions. Paper 54 ("Hr'g Tr.").

We have jurisdiction under 35 U.S.C. § 6. After considering the parties' arguments and supporting evidence, we conclude that Petitioner has proven by a preponderance of the evidence that claims 1–23 of the '082 patent are unpatentable. 35 U.S.C. § 316(e).

Patent Owner filed a Motion to Strike Petitioner's Reply and Relied Upon Evidence. Paper 36 ("PO Mot. Strike"). Petitioner opposed this motion. Paper 39 ("Pet. Opp. PO Mot. Strike"). Petitioner and Patent Owner also each separately filed Motions to Exclude certain evidence. Paper 43 ("PO Mot. Exclude"); Paper 44 ("Pet. Mot. Exclude"). The parties filed respective oppositions and replies thereto. Paper 45 ("PO Opp. Pet. Mot. Exclude); Paper 47 ("Pet. Opp. PO Mot. Exclude"); Paper 50 ("PO Reply Mot. Exclude"); Paper 51 ("Pet. Reply Mot. Exclude"). We address each of these motions in this Decision.

II. BACKGROUND

A. REAL PARTIES-IN-INTEREST

Petitioner identifies the real party-in-interest as "Ocular Therapeutix, Inc." Pet. 3. Patent Owner identifies the real party-in-interest as "Mati Therapeutics, Inc." Paper 5, 2.

B. RELATED MATTERS

Petitioner has disclosed:

> Ocular is not aware of any pending litigation related to the '082 Patent nor of any requested reissue, reexamination, or review of the '082 Patent. Ocular is, however, aware of a co-pending IPR petition regarding U.S. Pat. No. 9,463,114 [IPR2019-00442], also filed by Ocular against the same Patentee, Mati. The '114 Patent is not related to the '082 Patent but is directed to similar technology.
>
> Ocular is aware of one pending continuation application, U.S. App. No. 15/852,619, that includes the '082 Patent among its priority claims. A non-final office action issued on August 28, 2018, rejecting the pending claims based on grounds similar to the one that the examiner raised against the '082 Patent.[1]

Pet. 4. Patent Owner identifies the same *inter partes* review and '619 application as Petitioner. Paper 5, 2. Patent Owner also identifies U.S. Patent Application No. 16/168,554 as related to the '082 patent.[2] *Id.*

C. THE '082 PATENT

The'082 patent issued December 26, 2017, from U.S. Patent Application 15,405,991, which was filed January 13, 2017. Ex. 1001, codes (45), (21), (22). The '082 patent indicates priority through a series of

---

[1] US application 15/825,619 issued as patent US 10,383,817 B2 on Aug. 20, 2019.

[2] US application 16/168,554 issued as patent US 10,300,014 B2 on May 28, 2019.

continuation applications to a pair of provisional applications: Provisional 60/787,775 filed March 31, 2006, and Provisional 60/871,864 filed December 26, 2006. *Id.* codes (63), (60). The parties do not dispute the '082 patent's priority date and each treats March 31, 2006, as the earliest effective priority date. *See* Pet. 5 ("the earliest claimed priority date is March 31, 2006"); PO Resp. 51 ("as of March 31, 2006, a POSA with both Pritchard and Gillespie in hand would not have been able to make and use a claimed drug delivery system without undue experimentation").

The '082 patent indicates its invention relates to "[a]n implant for insertion through a punctum and into a canalicular lumen of a patient." Ex. 1001, Abstract. In the parties' submissions here, such devices are interchangeably called punctal or lacrimal plugs, inserts, and implants. *See, e.g.*, Pet. 1, 2, 6–7, 15, 17–18, 20–26, 36–51, 54–57, 62–64; PO Resp. 1–14. Punctal plugs can be intracanalicular, where they are inserted fully into the lacrimal canaliculus below the punctal opening, or they can be inserted into the lacrimal canaliculus but still exposed above the punctal opening. PO Resp. 5–6.

The relevant physiology is illustrated in a figure provided in Patent Owner's Response, reproduced below:

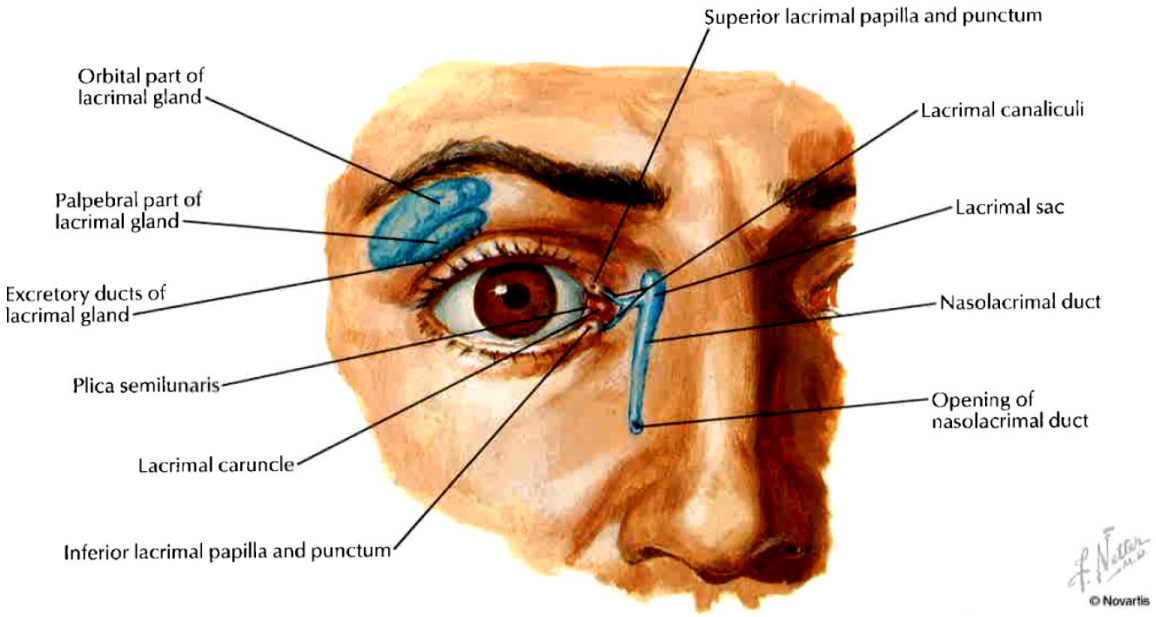

PO Resp. 5 (citing Ex. 2014 ¶¶ 26–27). Patent Owner's figure above shows (and labels) the relevant physiology of the human eye, including two openings, called puncta, in the corner of the eye and respectively behind the upper and lower eyelids, each of which connects to a respective duct called lacrimal canaliculi, which converge and connect with a lacrimal sac, which becomes a nasolacrimal duct as it travels down along the nose. *See id.* at 4–5. The puncta and lacrimal canaliculi carry tears away from the eye to the nasolacrimal duct of the nose anatomy. *Id.*

This physiology is also illustrated and described in the ’082 patent at Figure 1-1, as shown below:

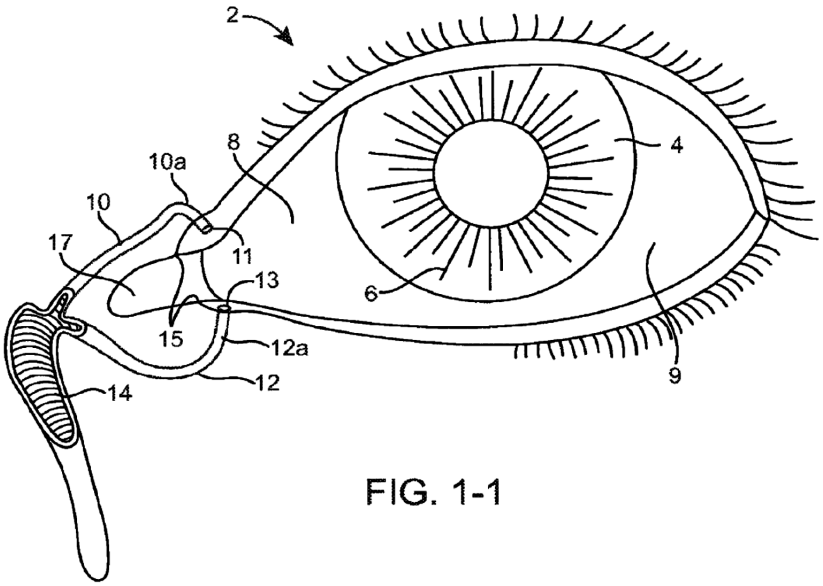

FIG. 1-1

“FIG[]. 1-1 [above] . . . show[s] anatomical tissue structures of an eye 2 suitable for treatment with implants,” where the upper and lower canaliculus are labeled 10 and 12 and each has a punctal opening labeled 11 and 13. Ex. 1001, 7:31–65.

The ’082 patent describes a diversity of embodiments of implants. *See id.* at 7:66–14:39, 16:27–19:25, 20:12–25, Figs. 1A–1G, 2A–2M, 3A, 3B, 4A, 4B, 9A–9G, 10A–10C, 11, 14A, 14B. One embodiment of an implant is shown at Figure 1A, reproduced below:

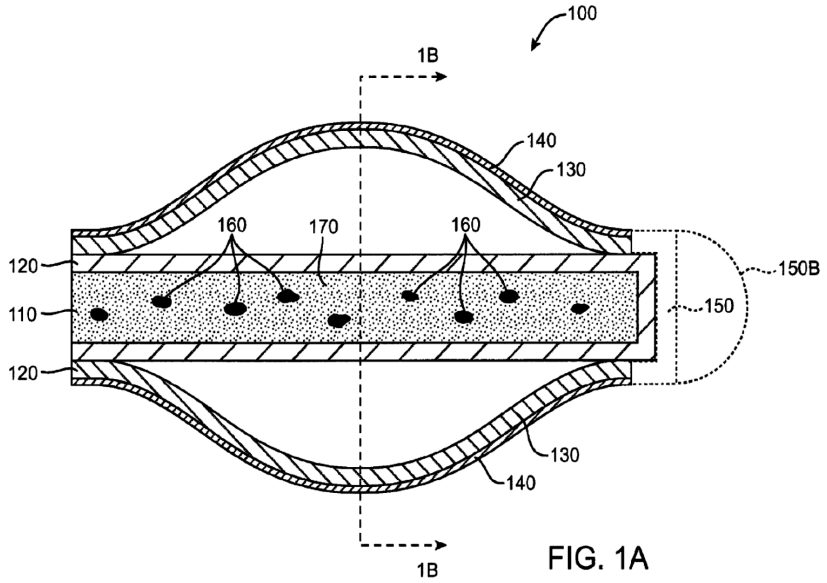

FIG. 1A

"FIG. 1A shows a top cross sectional view of a sustained release implant to treat an optical defect of an eye." *Id.* at 5:1–2. Figure 1A shows implant 100 having drug core 110, which can be a matrix 170 of silicone or the like and retains a therapeutic agent, such as Latanoprost oil or Bimatoprost particles. *Id.* at 7:66–8:28. Also shown is sheath body 120, impermeable to the therapeutic agent, surrounding core 110, but open at an end to allow release of the therapeutic agent. *Id.* at 8:29–37. Implant 100 also includes occlusive element 140 and retention structure 130. *Id.* at 8:38–52. Occlusive element 140 is impermeable to tears and occludes the hollow tissue structure therefrom. *Id.* Retention structure 130 is a component intended to retain implant 100 in the hollow tissue structure of the punctum of a canaliculus. *Id*. at 8:33–38.

Another embodiment is illustrated Figure 1G, reproduced below:

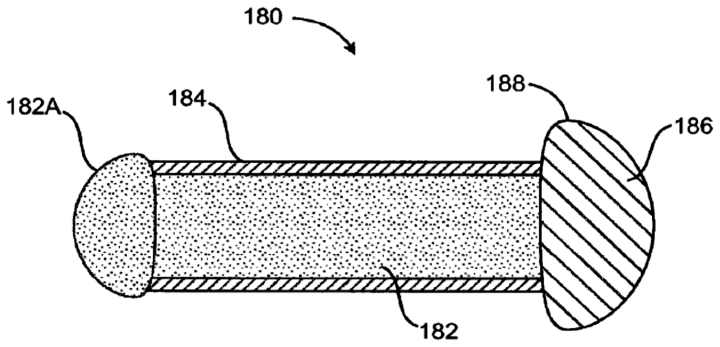

FIG. 1G

"FIG. 1G schematically illustrates a sustained release implant comprising a flow restricting retention element, a core and a sheath." *Id.* at 5:19–21. Figure 1G schematically illustrates, in cross-section, implant 180 having drug core 182 and sheath 184. *Id.* at 10:11–17. This embodiment further includes exposed (core) convex surface area 182A to increase release of the therapeutic agent contained within core 182, and retention structure 186 that can include occlusive element 188 that blocks tear flow through the canaliculus. *Id.* at 10:17–27.

Generally, the '082 patent describes the use and structure of punctal plugs as illustrated above, as follows:

> In many embodiments the tube body is sized to occlude the punctum to treat dry eye. In some embodiments, the body may be smaller than the punctum such that the swollen hydrogel can occlude the punctum. The body can comprises a protrusion comprising a flange, rim, wing or the like that is sized to remain on the exterior of the punctum while the body is positioned in the punctum so as to facilitate removal of the plug body and retention structure from the punctum while the hydrogel retention element is swollen.

Id. at 17:51–60.

The ’082 patent also states, “[i]n many embodiments, the sheath body and/or retention structure may have a distinguishing feature, for example *a distinguishing color, to show placement such that the placement of the sheath body and/or retention structure in the canaliculus or other body tissue structure can be readily detected by the patient*.” *Id.* at 20:67–21:5 (emphasis added). Other than the claims, this is the only discussion of color in the Specification. *See generally id.*

The ’082 patent has 23 claims, of which claims 1, 11, and 18 are independent claims. Independent claim 1 is illustrative and is reproduced below:

> 1. A drug delivery system for insertion into a lacrimal canaliculus of a patient, comprising:
>
> a therapeutic agent, a distinguishing color to show placement of the system in the lacrimal canaliculus of the patient and a body of material to hold the therapeutic agent wherein the body of material comprises hydrogel polymers and wherein the body of material is a cylindrical rod.

Id. at 30:20–27. Independent claim 11 is similar to claim 1, except in further requiring that the body of material “swells when placed in the lacrimal canaliculus.” *Id.* at 30:51–67. Independent claim 18 is also similar to claim 1, except in further requiring that the “therapeutic agent [is] selected from an anti-glaucoma agent, a corticosteroid[,] an anti-microbial agent, and anti-allergy agent[,] or a non-steroidal anti-inflammatory agent.” *Id.* at 31:8–17.

D. PETITIONER'S ASSERTED GROUNDS FOR UNPATENTABILITY

Petitioner asserts five (5) grounds for unpatentability, one under 35 U.S.C. § 102 for anticipation and the remaining four under 35 U.S.C. § 103 for obviousness. Pet. 13, 27–69. Petitioner's grounds are as follows:[3]

Ground	Claims Challenged	35 U.S.C. §	References/Basis
1	1–7, 9–16, 18–20, 22–23	102	Pritchard[4]
2	1–7, 9–16, 18–20, 22–23	103(a)	Pritchard, Gillespie[5]
3	8, 17, 21	103(a)	Pritchard, Gillespie, Hellberg[6]
4	1–7, 9–16, 18–20, 22–23	103(a)	Pritchard, Handbook[7]
5	8, 17, 21	103(a)	Pritchard, Handbook, Hellberg

[3] Because March 31, 2006 is the effective filing date of the '082 patent, and there is no evidence that any claim in the '082 patent's application ever had an effective filing date on or after March 16, 2013, the changes to Sections 102 and 103 under the AIA do not apply and the '082 patent is governed by pre-AIA 35 U.S.C. §§ 102 and 103.

[4] US 2005/0197614 A1 (published Sept. 8, 2005) (Ex. 1010, "Pritchard"); *see also* U.S. Provisional Application No. 60/557,368 (filed Mar. 29, 2004) (Ex. 1012, "Pritchard '368 Provisional") (cited for priority and incorporated by reference by Pritchard at paragraphs 1, 44, 46, 47, 59, 82, 101, 105, 116, 121). The Pritchard '368 provisional includes page numbering at its bottom center and lower left corner; we use the numbering at the latter herein.

[5] US 2002/0169409 A1 (published Nov. 14, 2002) (Ex. 1015, "Gillespie").

[6] US 6,646,001 B2 (issued Nov. 11, 2003) (Ex. 1017, "Hellberg").

[7] AMERICAN PHARMA ASSOCIATION, HANDBOOK OF PHARMACEUTICAL EXCIPIENTS 146–53 (Arthur H. Kibbe, Ph.D. ed., 3d ed. 2000) (Ex. 1016, "Handbook").

In support of these grounds for unpatentability, Petitioner submitted, *inter alia*, a Declaration of Reza Dana, M.D.,[8] and a Declaration of Anthony M. Lowman, Ph.D.[9] We discuss the disclosures of the asserted references below.

E. GILLESPIE

Gillespie is the November 14, 2002, published version of U.S. Application 09/852,519, which was filed May 10, 2001.[10] Ex. 1015, codes (43), (21), (22). Thus, Gillespie is prior art with respect to the '082 patent under 35 U.S.C. § 102. Gillespie indicates its invention relates to:

> An improved punctum plug [that] is more easily visualized when positioned within a punctual canal of a recipient. The body of the plug features an outwardly exposed surface when properly positioned, and a substance causing at least the outwardly exposed surface to contrast with surrounding tissue, such that the use of the substance causes the plug to be more easily visualized than if the substance were not present. The substance, which may be disposed on the outwardly exposed surface or within the body of the plug, may include a saturated coloration, or may be phosphorescent, fluorescent or otherwise operative to reflect or re-radiate light to assist in visualization.

Id. at Abstract, ¶¶ 1, 6.

Gillespie discloses that the insertion of punctal plugs treats the condition "dry eye." *Id.* ¶¶ 3–4. Gillespie states that because "the plug is extremely small, generally being less than a millimeter in diameter and a millimeter or so in length, it is very difficult to see" and "[i]t is the objects of this invention to make the punctum plug readably visible or detectable to the

[8] Ex. 1036 ("Dana Declaration").
[9] Ex. 1052 ("Lowman Declaration").
[10] Gillespie's application issued as US 6,982,090 B2 on January 3, 2006.

recipient or caregiver, and thereby help the recipient determine that the plug remains properly in place." *Id.* ¶ 5.

The visualization of punctal plugs disclosed by Gillespie includes providing "a substance causing at least the outwardly exposed surface to contrast with surrounding tissue, such that the use of the substance causes the plug to be more easily visualized than if the substance were not present." *Id*. at ¶ 6. However, Gillespie states that "[t]he rest of the plug body [other than the substances improving visualization] may be composed of any suitable material, including those presently used in the manufacture of such devices." *Id.* Gillespie teaches that the substance used to make the plugs more visible can be a variety of compositions, including "a dye or pigment." *Id.* ¶¶ 7, 13.

Gillespie states that, to

> allow[] the presence and position of the plug to be seen by another person or by the recipient in the mirror[,] [i]n one preferred embodiment, at least the outwardly exposed surface of the plug, or the entire plug body, is pigmented to contrast with surrounding tissue. For example, unlike existing devices, the exposed surface or plug body may be black or a saturated fluorescent color to create a more defined visual contrast.

Id. ¶ 11. Gillespie further states that "[i]n an alternative embodiment, the end of the plug or entire body is coated with, or otherwise contains a fluorescent dye, phosphor, phosphorescent pigment, reflective beads, quantum dots, or other material allowing the plug to be more easily visualized with appropriate illumination." *Id*. ¶ 12.

F. PRITCHARD

Pritchard is the September 8, 2005, published version of U.S. Patent Application 11/071,985, which was filed March 4, 2005. Ex. 1010, codes

(43), (21), (22). Therefore, it is 35 U.S.C. § 102 prior art with respect to the ’082 patent. Pritchard indicates priority to four U.S. Provisional Applications: provisional 60/550,132, filed March 4, 2004 (“Pritchard ’132 provisional”); provisional 60/557,368, filed March 29, 2004 (“Pritchard ’368 provisional”); provisional 60/564,858, filed April 23, 2004; and provisional 60/637,569, filed December 20, 2004. *Id.* at code (60). Pritchard states that “each of [these provisionals] are hereby incorporated by reference herein.” *Id.* ¶ 1; *see also id.* ¶¶ 43–45, 55, 77, 94, 98, 107, 111, 120 (repeatedly citing and incorporating these provisionals by reference).

Pritchard states that its invention relates to “a punctum plug for blocking flow of lacrimal fluid in an eye, the plug having an introducible portion comprising a dehydrated material hydratable by physiological saline to swell from a first diameter to a second diameter,” and is “related to occlusive devices, and includes disclosure of nasolacrimal occlusive devices such as canalicular plugs placed into the punctal opening of the lacrimal duct.” *Id.* at Abstract, ¶ 2. Pritchard states that its plugs can be used to treat a variety of conditions, such as dry eye syndrome, corneal ulcers, conjunctivitis, seasonal allergies, and glaucoma, to increase retention/enhancement of ocular medications, and to enhance healing and comfort after surgery, among many others. *Id.* ¶¶ 24, 48, claims 44, 77.

Pritchard states that

> Some punctal plug occlusion devices are meant to be inserted below the punctal opening and others possess a rim meant to sit atop the punctal opening. Devices of both categories can be fabricated using hydrogels and other materials as described herein.
>
> Devices inserted below the punctal opening are referred to herein as subpunctal devices. Advantages to this type of device

> include ease of insertion and low cost. Subpunctal devices are simple in design, being cylindrical pieces of material . . . .
>
> Devices made with a rim which rests atop the punctal opening provide some advantage in that they can be easily visualized and are simple to remove. . . . [T]he topmost parts of the plug may be made from materials other than hydrogel.

Id. ¶¶ 29–31.

Pritchard illustrates generic punctal plugs intended to have a rim that rests atop the punctal opening at its Figures 2A, 2B, and 3A, which are reproduced below:

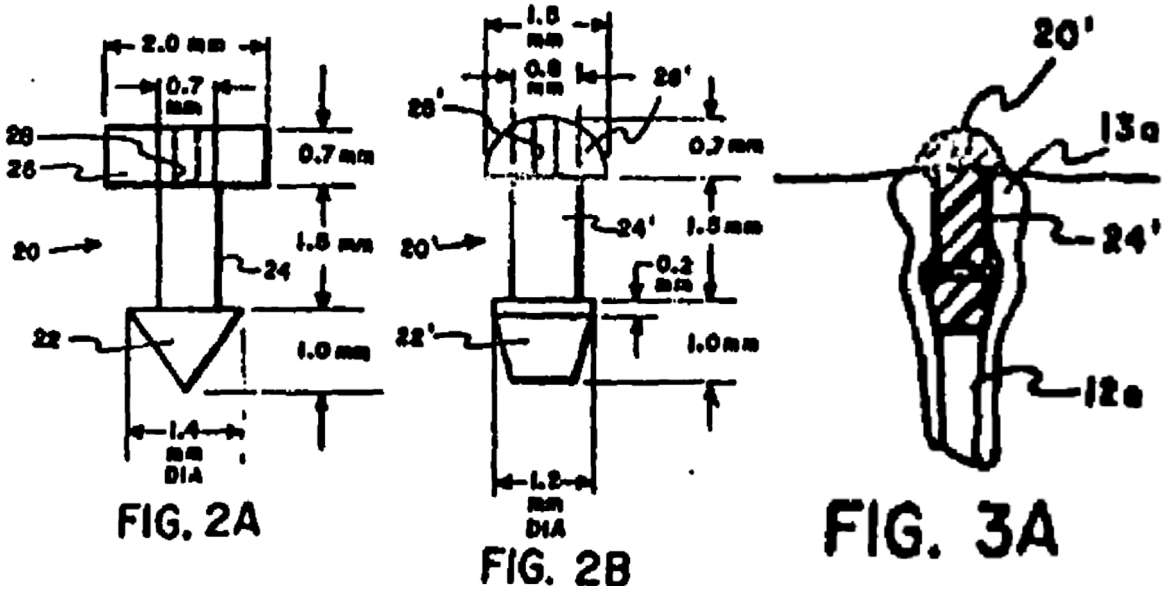

"FIG. 2A is a plan view, with representative dimensions, of one embodiment of a punctal plug in accordance with the present invention," "FIG. 2B is a plan view, with representative dimensions, of a second embodiment of a punctal plug," and Figure 3A shows "the punctal plug embodiment of FIG. 2B in place in the lower punctal opening." These figures each show a plug member 20, 20′ that has three portions: a tip (or barb) portion 22, 22′; a middle (or waist) portion 24, 24′; and a head portion 26, 26′. *Id.* ¶ 36. The

head portion 26, 26′ is large enough so it rests on the punctal opening to prevent the plug from passing into the canaliculus entirely. *Id.* ¶ 37.

Pritchard discloses that its plugs 20, 20′ can be made of HEMA hydrophilic polymer, for example, and can store and slowly dispense ophthalmic drugs to the eye. *Id.* ¶ 38. Pritchard states that, in addition to the basic structures shown in Figures 2A, 2B, and 3A,

> Other features may be incorporated into a nasolacrimal occlusive device, as set forth elsewhere herein. These various features may be combined with the various materials and methods set forth and referenced herein. For example, the shaft further may have a ridge or a collapsible portion. The device, or a portion thereof, may further comprise a degradable portion. The device, or a portion thereof, may further comprise a therapeutic agent.

Id. ¶ 43. Pritchard identifies that the Pritchard ’132 provisional and the Pritchard ’368 provisional (which are expressly incorporated by reference), among many other references, teach a variety of materials that may advantageously be employed in the construction of a nasolacrimal occlusive devices. *Id.* ¶ 44.

In addition to HEMA, noted above, Pritchard discloses various forms of gellan as a hydratable material for its punctal plugs. *Id.* ¶¶ 46–47. Pritchard discloses that

> Gellan has a long history of clinical use in humans that spans 15 years. It has been studied as a drug delivery material because of its in situ gelling properties. It has also been studied as a time release material for drug delivery for its controllable and predictable dissolution properties (as a gel) in contact with mucosal membrane (analogous to the punctum) in vivo, and for insulin delivery in vivo. And gellan has been studied for both its gelling properties and dissolution rate. Several studies have been completed dealing with the safety of gellan for use in the eye. And more specifically, numerous studies involving gellan as a

> safe and efficacious delivery vehicle for TIMOLOL (antiglaucomatous medication) have been completed.

Id. ¶ 48.

Pritchard further discloses that punctal plugs that incorporate hydrogel material swell to achieve a secure fit when used.[11] *Id.* ¶ 51–52. Pritchard further states

> This unconstrained hydrogel material may be located at, e.g., the bottom or nose of a plug. The top end of a plug, the neck and rim, may include a strong, non-swelling material to address the issues of cutting strength and dimensional stability. For example, a nonswelling plastic may be used to cover the upper portion of a polysaccharide plug so that the polysaccharide will swell against the plastic but not further expand. The other portion of such a plug, however, will be free to swell. A punctum plug may be shaped to have a configuration as shown in, e.g., FIGS. 2-3.

Id. ¶ 52. Furthermore, Pritchard discloses that such swellable hydrogels can be anisotropically swellable, meaning they swell in only lateral dimensions, such as shown in its Figures 7A and 7B (reproduced below), which depict cylinders of hydrogel swelling upon hydration after implantation (the cylinders become fatter). *Id.* ¶¶ 56–58. Pritchard states that, "[r]eferring to FIGS. 2A and 2B, for example, plug 20 may be made of an anisotropically swellable material" entirely or only partially such that the waist portion 24

---

[11] There is no dispute that HEMA and gellan are hydrogels. Ex. 1010 ¶ 54; Pet. 41–44 (citing Pritchard's HEMA and gellan as hydrogels); PO Resp. 20, 40 ("Gellan gum hydrogel"), 49 ("'*controllably swellable materials*' such as hydrogel (*e.g.*, Gellan gum); Ex. 1036 ¶¶ 33 ("HEMA is a well-known hydrogel material"), 54 (further discussing Pritchard's disclosure of HEMA); Ex. 2014 ¶ 40 ("The sustainability of the 'light straw color' in Gellan gum hydrogel, however depends on the media.").

could sell while the head portion 26 does not. *Id.* ¶¶ 62–63. Such devices are cylindrical in shape. *Id.* ¶¶ 65–66.

Pritchard describes cylindrically shaped plugs where either the entire plug can be cylindrical hydrogel or a middle portion can be cylindrical hydrogel. *Id.* ¶¶ 30, 36, 55, 65–66, 73–79, 113–119, 131–140, 152. Pritchard illustrates cylindrical-bodied plugs at Figures 2A, 2B, and 3A, shown above, and also at Figures 7A and 7B, reproduced below:

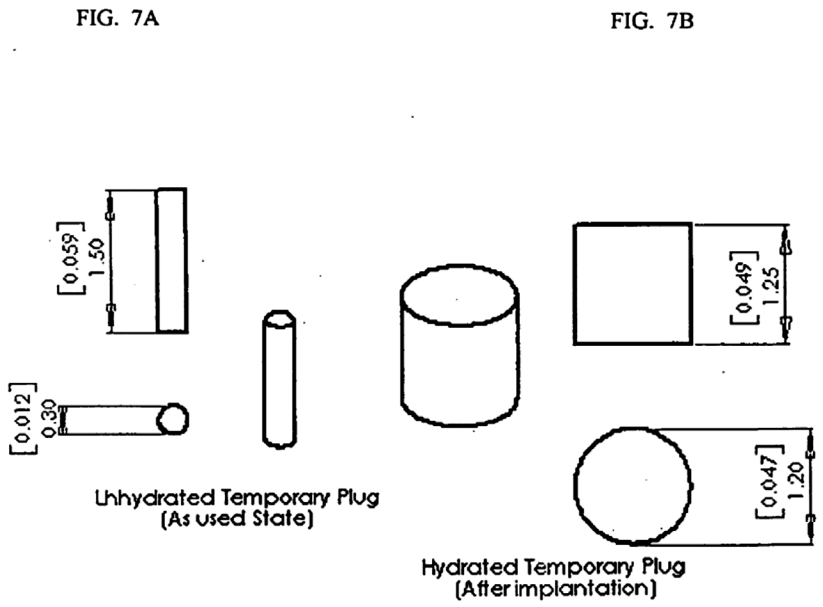

"FIGS. 7A and 7B are diagrams showing a nasolacrimal occlusion device that swells after contact with a tear or other physiological fluid." *Id.* ¶ 20. Figure 7A shows a gellan cylinder's dimensions before swelling and Figure 7B shows the gellan cylinder's dimensions after swelling under conditions simulating the lacrimal system (e.g., hydrated in response to tears or introduced saline). *Id.* ¶¶ 159–165.

Pritchard discloses that its devices can be a variety of colors. Pritchard discloses examples where devices made of gellan were a turquoise color, which persisted in physical saline. *Id.* ¶¶ 87, 107. This color was a

result of making the device chelation-resistant by including cuprous (copper (I)) chloride in the gellan material. *Id.* Pritchard discloses another example where a gellan device was brown-green, which persisted in physiological saline. *Id.* ¶ 88. This color also resulted from making the device chelation-resistant, but by adding iron (II) or iron (III) ions to the gellan material. *Id.* Pritchard discloses other examples where the device was a light straw color, which lasted 2–3 weeks upon exposure to physiological saline. *Id.* ¶¶ 137–140.

Pritchard also discloses that its devices can include functional groups that are capable of binding a metal ion. *Id.* ¶¶ 102–108. Such functional groups are described as advantageous because they facilitate catalytic oxidation of the material of the punctal plug, which may be used to remove the device from the nasolacrimal passage. *Id.* at 105.

Pritchard also discloses that

> The gels and other devices set forth herein could contain medicaments, therapeutic agents, antimicrobials (e.g., silver), bioactive minerals and glasses, radioactive therapeutic materials, cytotoxic agents (for tissue ablation), etc. The gel would entrap active therapeutic agents at the site where the gel is formed in a patient, or could slowly elute therapeutic agents into the patient, e.g., into the bloodstream or other tissues.

Id. ¶ 132. Examples of therapeutic agents disclosed by Pritchard include silver and the antimicrobial triclosan; however, Pritchard's incorporated provisionals, particularly the Pritchard '368 provisional, disclose many other therapeutic agents. Ex. 1010 ¶¶ 133, 135, 137–140; Ex. 1012. The '368 provisional discloses, for example, therapeutic agents such as steroids and corticosteroids (dexamethasone), prostaglandin inhibitors, anti-inflammatory agents, beta blockers, steroidal and non-steroidal anti-inflammatory agents,

prostaglandins, antihistamines, and anti-glaucoma drugs (timolol, latanoprost, brimonidine), to name a few. Ex. 1012, 6:4–14:22. The Pritchard '368 provisional states that "[p]ersons of skill in these arts, after reading this disclosure, will be able to use a variety of techniques to incorporate therapeutic agents into materials described herein." *Id.* at 15:1–2.

Pritchard concludes by stating that "[a]ll patents, patent applications, and publications set forth herein are hereby incorporated by reference herein" and "[t]he headings, while placed for general convenience of the reader, are not intended to limited the embodiments," followed by a set of 79 claims. Ex. 1010 ¶ 166, claims 1–79. In various combinations of elements, Pritchard's claims teach an invention, as discussed above, that is a punctum plug of dehydrated material hydratable by physiological saline, e.g., gellan, which may have a shaft portion introducible into the punctal opening of a patient, may have a head portion, may include a therapeutic agent, e.g., an antimicrobial such as silver, may include other metals, e.g., copper or iron, and may be used to treat eye conditions, such as dry eye, allergies, or trauma. *Id.* at claims 1–79.

G. HELLBERG

Hellberg issued on November 11, 2003, from U.S. Application 10/059,692, which was filed January 28, 2002. Ex. 1017, codes (45), (21), (22). Therefore, Hellberg is prior art with respect to the '082 patent under 35 U.S.C. § 102. Hellberg indicates its invention is related to "methods and compositions for the treatment of glaucoma and ocular hypertension, comprising the administration of a prostaglandin FP receptor agonist and a prostaglandin synthesis inhibitor." *Id.* at Abstract, 5:40–54.

Hellberg states that "[p]rostaglandins, which are metabolite derivatives of arachidonic acid, have recently been pursued for possible efficacy in treating glaucoma and lowering IOP." *Id.* at 3:40–42. Hellberg teaches that "preferred prostaglandin analogs" for treating glaucoma include latanoprost, travoprost, and bimatoprost, which are commercially available. *Id.* at 7:49–60. Hellberg states that "[t]he preferred route of administration is topical," and compounds "can be administered as solutions, suspension, or emulsions (dispersions) in an ophthalmically acceptable vehicle," which is "any substance . . . non-reactive with the compounds and suitable for administration to a patient[,] . . . suitable for topical application to the patient's eyes." *Id.* at 8:11–20; *see also id.* 8:31–34 (eye drops).

H. HANDBOOK

Handbook is a publication by the American Pharmaceutical Association and the Pharmaceutical Press and was published in 2000. Ex. 1016 (cover page and copyright notice). Therefore, Handbook is prior art with respect to the '082 patent.

Petitioner's Exhibit 1016 includes a portion of Handbook directed to "Coloring Agents." *Id.* at 146. Handbook states:

> The primary purpose of coloring agents is to visually alter the appearance of a medicinal product by imparting a definite color or shade. This has the advantage to the manufacturer of making otherwise similar products more distinctive. Easier differentiation of a product is also of considerable benefit to the patient on multiple medication.
>
> The use of color in medicinal products, in conjunction with other factors, such as shape and packing, additionally serves to reinforce brand image and identity. This commercial distinctiveness also aids in preventing the counterfeiting of products.

> Colors used in some preparations can also serve to introduce a uniformity of appearance to a product, e.g., a tablet, where an ingredient in the formulation has itself a variable appearance from batch to batch.

Id.

Handbook further states that "[t]he use of color is occasionally associated with topical preparations (especially over the counter remedies) and sustained-release granules in transparent hard gelatin capsules." *Id.* Handbook further states that "[s]ome of the insoluble colors or pigments have the additional benefit when used in tablet coatings or gelatin shells of providing useful opacity which can aid in the stability of light-sensitive active materials in the tablet or capsule formulation." *Id.*

Handbook includes tables of dozens of coloring agents that are approved for use by the United States or the European Community, as of 1997 and 1998, respectively. *Id.* at 146–50 (Tables I–VIII). Handbook discloses that some colors have excellent stability, where others have poor stability but are useful for low toxicity, indicates that the incompatibilities and method of manufacture of coloring agents was known, and discloses that "[c]oloring agents are used in a variety of oral and topical pharmaceutical formulations, in addition to their use in cosmetics and food products." *Id.* at 147–48. Handbook acknowledges that there are some concerns over the safety of particular coloring agents, but bodies such as the FDA have provided review that has resulted in a list of permitted colors that are generally regarded as safe. *Id.* at 148.

III. DISCUSSION

A. ORDINARY LEVEL OF SKILL IN THE ART

In determining the level of skill in the art, we consider the type of problems encountered in the art, the prior art solutions to those problems, the rapidity with which innovations are made, the sophistication of the technology, and the educational level of active workers in the field. *Custom Accessories, Inc. v. Jeffrey-Allan Indus., Inc.*, 807 F.2d 955, 962 (Fed. Cir. 1986); *Orthopedic Equip. Co. v. U.S.*, 702 F.2d 1005, 1011 (Fed. Cir. 1983).

Petitioner contends "[t]he person of ordinary skill in the relevant art is an ophthalmologist with several years of experience in the design, development, and/or study of drug delivery devices and/or ophthalmic inserts." Pet. 26–27 (citing Dana Declaration, Ex. 1036 ¶¶ 23–27).

Patent Owner states:

> Mati does not dispute Petitioner's proposed definition of a "POSA" ("an ophthalmologist with several years of experience in the design, development, and/or study of drug delivery devices and/or ophthalmic inserts," Pet. at 26-27), to the extent Petitioner agrees to clarify the definition as follows: **an ophthalmologist with several years of experience in the design, development, and/or study of drug delivery ophthalmic devices**.

PO Resp. 16 (citing Williams Declaration, Ex. 2014 ¶ 20) (emphasis added).

The two proposed definitions (or clarification) of the skilled artisan are very similar. The scope of Petitioner's definition encompasses Patent Owner's clarification because a skilled artisan experienced in both drug delivery devices and ophthalmic inserts would necessarily have experience with drug delivery ophthalmic devices as a subset of such things, thus making the clarification unnecessary. In addition, Petitioner's definition is consistent with the evidence of the ordinary level of skill conveyed by the

disclosure of the ’082 patent and cited prior art. *See Okajima v. Bourdeau*, 261 F.3d 1350, 1355 (Fed. Cir. 2001) (“the prior art itself [may] reflect[] an appropriate level” as evidence of the ordinary level of skill in the art) (quoting *Litton Indus. Prods., Inc. v. Solid State Sys. Corp.*, 755 F.2d 158, 163 (Fed. Cir. 1985)). Therefore, we agree with and adopt Petitioner’s proposed definition of the person of ordinary skill in the art set forth above. However, our decision would not be effected by or change based on which of the party’s definitions we used herein.

Petitioner cites the Dana Declaration’s paragraphs 23–27 as supporting the above-discussed definition of a person of ordinary skill in the art. Pet. 26–27. This portion of Dr. Dana’s Declaration identifies and discusses the “relevant art” for the invention claimed in the ’082 patent, as of March 31, 2006, as including hydrogel polymer technology, therapeutic agent technology, the treatment of ocular conditions, and the use of drug-delivering implants for such uses. Ex. 1036 ¶¶ 23–27. “The person of ordinary skill in the art is a hypothetical person who is presumed to know the relevant prior art,” which, as discussed above in relation to the cited prior art asserted against the claims and other prior art discussed by the parties and their witnesses, includes these various, related technologies. *In re GPAC Inc.*, 57 F.3d 1573, 1579 (Fed. Cir. 1995). Petitioner makes this point directly, and by implication in discussing the general knowledge in the prior art, throughout its Petition and Reply. Pet. 16 (n.2), 17–27; Pet. Reply, 1–2, 8–9, 19–21. The technologies addressed by Dr. Dana as the relevant art, which would have been known to and a part of the experience of the person of ordinary skill in the art, are not strictly or narrowly directed to only ophthalmology. Petitioner further asserts that the person of ordinary skill in

the art, if (or although) not a chemist, would rely on a chemist, such as an experienced formulator. Pet. Reply 9–10 (citing Ex. 1052, *generally*; Ex. 1043, 12:3–13:1, 36:15–37:1, 167:15–168:7, 224:23–226:2 (Dr. Williams's deposition testimony on collaboration between ophthalmologists and chemists)). Thus, we also note that the person of ordinary skill in the art would not have functioned in isolation in designing or developing a punctal plug that includes a therapeutic agent, but would likely have been a part of a multidisciplinary team, including a consulting chemist, and the skilled artisan's "experience in the design[] [and] development" of such drug delivery systems and/or ocular inserts would have included knowledge of such relevant prior art. *See* Ex. 1043 (as cited in Pet. Reply, 9–10) 8:8–13:5, 36:15–37:1 (Dr. Williams testifying that an ophthalmologist would have worked with a team, including a chemist, to develop a drug delivery device); Ex. 2014 (as cited in Pet. Reply, 2; PO Resp. 1, 16, 59) ¶¶ 36, 111 (POSA designers of drug-releasing punctal plugs would have to account for the physiochemical properties of the selected drug molecule), Exhibit A (Dr. Williams has a degree in Chemistry); Ex. 1052 (as cited, generally, in Pet. Reply, 10) ¶¶ 18–23 (Dr. Lowman discussing interactions between ophthalmologists and chemists in developing drug-delivering ocular inserts). As described by Dr. Dana, the relevant art to the '082 patent's invention included anatomy of the eye, treatment of ocular conditions, pharmaceuticals and drug delivery, materials science and polymer chemistry, and ocular inserts like punctal plugs. Ex. 1036 (as cited in Pet., 6, 9, 17–27) ¶¶ 28–45; *see also* Ex. 2014 ¶¶ 26–36 (Dr. Williams testifying to the same or similar technical background relating to the invention and development of punctal plugs).

Thus, we find the skilled artisan, i.e., an ophthalmologist with several years of experience in the design, development, and/or study of drug delivery devices and/or ophthalmic inserts, would have had access to the relevant knowledge of, *inter alia*, a chemist relating to her experience in the design, development, and/or study of drug delivery devices and/or ophthalmic inserts, as a part of such experience, as these are the type of problems or issues encountered in the art by active workers in the field and would bring such experience and knowledge to bear in developing a punctal plug as claimed. *Custom Accessories*, 807 F.2d at 962.

It is from the perspective of such a person of ordinary skill in the art, as defined above, that we consider and analyze the claims of the ’082 patent, the prior art, and the issues of patentability discussed below.

B. CLAIM CONSTRUCTION

Based on the filing date of the Petition (Dec. 14, 2018), the Board interprets claim terms in an *inter partes* review using the same claim construction standard that is used to construe claims in a civil action in federal district court. 37 C.F.R. § 42.100(b) (2019).

In construing claims, district courts give claim terms their ordinary and customary meaning, which is “the meaning that the term would have to a person of ordinary skill in the art in question at the time of the invention.” *Phillips v. AWH Corp.*, 415 F.3d 1303, 1312–13 (Fed. Cir. 2005) (en banc). Sources for claim interpretation include “the words of the claims themselves, the remainder of the specification, the prosecution history [i.e., the intrinsic evidence], and extrinsic evidence concerning relevant scientific principles, the meaning of technical terms, and the state of the art.” *Id.* at 1314 (quoting *Innova/Pure Water, Inc. v. Safari Water Filtration Sys., Inc.*, 381 F.3d 1111,

1116 (Fed. Cir. 2004)). "[T]he claims themselves [may] provide substantial guidance as to the meaning of particular claim terms." *Id.* However, the claims "do not stand alone," but are part of "'a fully integrated written instrument,' consisting principally of a specification that concludes with the claims," and, therefore, the claims are "read in view of the specification." *Id.* at 1315 (quoting *Markman v. Westview Instruments, Inc.*, 52 F.3d 967, 978–79 (Fed. Cir. 1995)).

Any special definition for a claim term must be set forth in the specification with reasonable clarity, deliberateness, and precision. *In re Paulsen*, 30 F.3d 1475, 1480 (Fed. Cir. 1994). Without such a special definition, however, limitations may not be read from the specification into the claims. *In re Van Geuns*, 988 F.2d 1181, 1184 (Fed. Cir. 1993).

Other than the claim language addressed below, no claim terms need be addressed or require express construction. *See Vivid Techs., Inc. v. Am. Sci. & Eng'g, Inc.*, 200 F.3d 795, 803 (Fed. Cir. 1999) ("[O]nly those terms need be construed that are in controversy and only to the extent necessary to resolve the controversy.").

Distinguishing Color to Show

The claim language "distinguishing color to show" appears in each of the independent claims, i.e., claims 1, 11, and 18, of the '082 patent. Ex. 1001, 30:20–27, 30:51–58, 31:8–17.

Petitioner contends, "[i]n the context of claim wording and the specification, a person of ordinary skill in the art would understand that 'distinguishing color to show' means ['']a color that improves visibility.'" Pet. 11 (citing Dana Declaration, Ex. 1036 ¶ 51; Ex. 1001, 20:67–21:5).

In response, Patent Owner states:

> Petitioner's construction of "distinguishing color to show" to mean "a color that improves visibility" (Pet. at 10-11) renders an otherwise unambiguous phrase ambiguous. It is unclear what "improves" – a term of degree – means. Also, the construction omits what it means to be "distinguishing." The phrase, in full context, "*a distinguishing color to show placement of the system in the lacrimal canaliculus of the patient*" as it appears in the claims, is unambiguous and needs no construction. In other words, what makes a color "distinguishing" is that it "show[s] placement of the system in the lacrimal canaliculus of the patient," as expressly recited by the claim. EX1001, claim 1. The claim language is clear.

PO Resp. 25–26 (emphasis added). Patent Owner further asserts that

> There is clear support in the specification for this phrase. Ex. 1001, 20:67-21:5, Pet. at 11. In view of the claim language and the express teachings of the de Juan ['082 patent's] specification, it is clear that "a distinguishing color to show the placement" must contrast the implant from the surrounding tissue of the canaliculus. Ex. 1001, 20:67-21:5, claim 1. A POSA applying the ordinary meaning would fully ascertain proper claim scope.

Id. at 26.

We found it unnecessary to construe "distinguishing color to show" at the institution stage of this proceeding because we initially determined this claim language to be readily understandable on its face to the person of ordinary skill in the art, within the context of the claims and Specification. Institution Decision 10–11. To the extent necessary to resolve any controversy involving that claim language, we further discuss its meaning here.

Petitioner asserts that '"placement . . . in the lacrimal canaliculus' encompasses the act of placing the system," meaning moving the punctal plug into the lacrimal canaliculus, such that Petitioner's above-noted

definition regarding improving visibility includes enhanced visibility of the punctal plug in any circumstance. *See, e.g.*, Pet. Reply 6; Hr'g Tr. 15:13–26 (arguing "placement means the act of placing, the act of inserting something"); *see also* Ex. 1036 ¶ 52 (describing a change from clear and colorless to a light straw color as making the plug easier to see). Patent Owner, on the other hand, asserts that merely comparing a clear and colorless device to a device having a color does not establish whether the color is distinguishing to show placement of the device in the lacrimal canaliculus because the surrounding tissue must be the context when considering the color. *See, e.g.*, PO Sur-reply 16–17; Hr'g Tr. 20:18–19 (arguing "in order to be distinguishing, it has to be distinguishing with respect to the tissue in which it is inserted."). Therefore, a dispute remains and clarification is warranted.

We maintain our finding that the claim term "distinguishing color to show" carries its ordinary meaning as it would have been understood by the person of ordinary skill in the art. However, in the context of the claim and in view of the Specification, this claimed color distinguishes "to show placement of the system in the lacrimal canaliculus of the patient." Ex. 1001, 30:22–24. Regarding the coloring of a punctal implant (the claimed system), the Specification states only that the "distinguishing color[] . . . show[s] placement such that the placement of the sheath body and/or retention structure in the canaliculus or other body tissue structure can be *readily detected by the patient*." *Id.* at 21:2–5 (emphasis added). Thus, the only "placement" that is described in the Specification is the position of the implant in the eye, not the act of placing it there, as the only viewer described as needing to see the implant placement is a patient, who would

not be a person actively implanting the device, but would only view it once it was placed in the eye.

Therefore, we agree with Patent Owner's position, particularly when considering the claim language within the context of the entire claim and the relevant description in the Specification. The plain and ordinary meaning of the full clause "a distinguishing color to show placement of the system in the lacrimal canaliculus of the patient" is that *the color must show the system as it sits in the lacrimal canaliculus of the patient*.

Sheath Body

Regarding "sheath body," which is recited by claim 2 of the '082 patent, Petitioner contends, "in the context of the specification of the '082 patent, a person of ordinary skill in the art would understand 'sheath body' to mean a 'material or structure that is impermeable to the therapeutic agent and that covers a portion of a drug core to prevent migration of the therapeutic agent from the covered portion of the drug core.'" Pet. 12 (citing Dana Declaration, Ex. 1036 ¶¶ 68–70; Ex. 1001, 20:27–34).

Patent Owner, in response, states, "[i]n view of the claim language and the express teachings of the de Juan ['082 patent] specification, a POSA applying the plain and ordinary meaning of the term would fully ascertain proper claim scope. The claim language is clear and would be readily understood by the Board. . . . Accordingly, as the Board agreed, Petitioner's proposed construction is unnecessary." PO Resp. 26–27. Therefore, Patent Owner argues no construction is necessary. *Id.*

We find it unnecessary to construe "sheath body," because this claim language is readily understandable on its face, within the context of the claims and Specification, to the person of ordinary skill in the art.

Other Claim Construction Disputes

The only claim terms the parties expressly assert require consideration for interpretation are the two addressed above. However, over the course of opposing the patentability challenge, Patent Owner asserts that the claims require (1) "intracanalicular placement" of the claimed system (meaning the device is implanted subpunctally, with no outwardly exposed surface once placed; applies to all claims), (2) "sustained release of the drug at the desired therapeutic level for an extended period of time" (applies to all claims), (3) the claimed distinguishing color be "retained" or "lasting" (applies to all claims), and (4) that the recited functional groups (applies to claims 9 and 22) "provide the desired solubility of the therapeutic agent in the matrix." *See* PO Resp. 1, 2, 12–14, 19, 20, 40–45, 47, 50, 58. Patent Owner contends the claims are distinguishable over Petitioner's prior art based on these requirements. *Id.*

Petitioner argues that Patent Owner is attempting to improperly import the above-identified limitations into the claims. Pet. Reply 1–8. Petitioner argues that the claims do not require a *sustained release at the desired therapeutic level for an extended period of time* because the limitation is not recited and the Specification describes drug release as potentially "a relatively short period of time, for example minutes or hours . . . through days or weeks . . . or longer." *Id.* at 3 (citing Ex. 1001, 23:59–63). Petitioner argues that *lasting* color is not recited in the claims and "[n]owhere does the '082 patent teach that color must endure under all conditions." *Id*. at 3–4 (citing Ex. 1043, 137:21–138:3, 138:21–139:4 (Dr. Williams testifying that the '082 patent does not teach how to make a plug with lasting and distinguishing color). Petitioner argues the claims do

not require placement of the system wholly within the canaliculus, i.e., intracanalicular placement. *Id.* at 5–8. Petitioner argues that "the plain meaning of [the claim language] 'placement . . . in the lacrimal canaliculus' encompasses the act of placing the system, as well as system locations both wholly within and only partly within the lacrimal canaliculus." *Id.* at 6. Petitioner further argues that the '082 patent never mentions or suggests using transillumination to observe the distinguishing color of its plugs and a patient, who would not use such a technique, would not be able to identify any device wholly within the canaliculus if transillumination was the intended means of distinguishing the claimed device. *Id.* at 7 (citing Ex. 1001, 20:67–21:5; Ex. 1043, 20:67–21:51, 32:15–18, 34:7–10, 130:7–131:19, 133:8–9). Petitioner does not discuss Patent Owner's position on "functional groups" in its Reply. *See generally id.*

In response to Petitioner's arguments, Patent Owner asserts that it merely argues the invention of the '082 patent "*allows for* sustained release of the drug," rather than that it *must* provide it. PO Sur-reply 10 (emphasis added). Regarding the "lasting" distinguishing color, Patent Owner states that "the challenged claims do not specifically require the distinguishing color to be lasting," but then states that "[a] color that does not last for as long as the device is in placement cannot be used to show placement, and thus, would not satisfy the claim limitation." *Id.* at 10–12 (citing Ex. 1043, 81:20–82:11). Regarding intracanalicular placement, Patent Owner argues that the fact that the claims require "1) '***a cylindrical rod***,' and 2) 'for ***insertion into*** a lacrimal canaliculus of a patient'" means that the claims require "an intracanalicular or subpunctal plug, i.e., a plug that is wholly placed within the canaliculus such that no externally exposed surface

remains." *Id*. at 12–13 (citing Ex. 1001, claim 1, 8:29–33, 9:47–10:3, 10:5–10, 10:17–27, Figs. 1F, 1G). Countering Petitioner's argument that the '082 patent does not describe any way of seeing plugs other than by their externally exposed parts, Patent Owner argues that the '082 patent need not have identified transillumination as a means of detecting its plugs because such was a conventional, well-known technique and patients with ocular conditions in need of punctal plugs often seek help from ophthalmologists. *Id*. at 15. Patent Owner does not address the issue of *functional groups* in its Sur-reply.

Having considered the parties' arguments on these other claim construction disputes and the intrinsic record, we conclude that Patent Owner's proposed claim interpretations are not supported by the record.

Regarding Patent Owner's assertion that the claimed invention requires "intracanalicular placement" of the *system*, this is not supported by the claims themselves or the Specification. No claim states or even suggests that the recited "drug delivery system" must be inserted *entirely* into a lacrimal canaliculus, below the puncta. Ex. 1001, 30:20–31:29. Patent Owner's argument that the claims recite "a cylindrical rod" and "for insertion into a lacrimal canaliculus" is not persuasive. Reading the plain language of the claims, the drug delivery system includes "a hydrogel body of material," which "is a cylindrical rod," and recites that the "system [is] for insertion into a lacrimal canaliculus." *See, e.g., id.* at 30:51–68. The entire system is not required to be the cylindrical rod, but only some portion holding the therapeutic agent. Moreover, even were the entire system cylindrical-rod-shaped, it is not apparent from Patent Owner's arguments why this would necessitate that it be placed wholly subpunctally. The

claims simply do not recite subpunctal insertion or complete insertion or intracanalicular insertion, or anything hinting that such is required.

Reading the claim language in view of the Specification further confirms our conclusion. The Specification does not use the terms "intracanalicular" or "subpunctal," or any variants thereof. *See generally* Ex. 1001. The Specification describes several embodiments of punctal plugs having complex shapes with only a portion being a cylindrical rod, and embodiments of punctal plugs intended to have portions remaining exposed at or above the puncta when implanted. *See, e.g.*, *id.* at 2:38–41 (the device may have a flange to retain it near the punctum, the retention structure may fit partially within the canalicular lumen), 4:1–9 (only a distal end of the implant is inserted into the punctum, therapeutic agent delivered from a proximal end of the implant to the tear fluid adjacent the eye), 5:19–22, 5:51–61, 6:42–50, 6:58–7:2, 10:11–27, 12:22–13:15, 17:45–19:25, Figs. 1G, 2I–2K, 9D, 9E, 10A–10C, 11. Nowhere in the claims or Specification are such embodiments excluded from the invention.

Moreover, the claims require a distinguishing color, which we concluded above means that the color must show the system as it sits in the lacrimal canaliculus of the patient. The *only* mention of such a color in the Specification is a single sentence, which describes this distinguishing color as readily detected *by the patient*. *Id.* at 20:66–21:5. It makes no sense for the claim's scope to at once encompass such ready visual detection by a patient and then also require that the device to be readily detected is entirely below the surface of the tissue, hidden from plain view, and requires technical equipment to detect.

Again, "while it is true that claims are to be interpreted *in light of* the specification . . . , it does not follow that limitations from the specification may be read into the claims. . . . [T]he claims define the invention." *Sjolund*, 847 F.2d at 1581–82. Here, although there may be embodiments described in the Specification where a plug is implanted entirely within the canaliculus, i.e., *intra*canalicularly, this is neither recited by the claims nor identified in the Specification as a requirement and, as noted, there are described embodiments where it does not occur (for example, the embodiments illustrated at Figs. 1G, 2I, 2K, 9D (Ex. 1001)). Thus, we will not read a limitation into the claims that is not therein-recited or otherwise clearly required.

The claims also do not require "sustained release of the drug at the desired therapeutic level for an extended period of time." As noted above, Patent Owner softened its position that this is a claim requirement. PO Sur-reply 10. No claim recites "sustained release" or that drug release must reach a "therapeutic level," although the latter may be implied by certain claims (e.g., 4, 13, 19) that recite that the drug delivery system is "used to treat" a condition, such as glaucoma. Ex. 1001, 30:20–31:29. Furthermore, the Specification does not support that the claims require "sustained release" of a drug. The Specification states that the "extended period of time" for drug release of the invention "may mean a relatively short period of time, for example minutes." And, the Specification further describes "[i]t is also within the scope of this invention to modify or adapt the devices to deliver a high release rate, a low release rate, a bolus release, a burst release, or combinations thereof." *Id.* at 25:66–26:1. Thus, it is apparent that the claims are not limited to a "sustained release of the drug at the desired

therapeutic level for an extended period of time," for more than mere minutes, if even that long.

The claims also do not require that the recited *distinguishing color* be "retained" or "lasting." There is nothing in the claims themselves that indicates the system's color must be retained or last for any period of time. The Specification describes the invention's coloring in only a single sentence, which does not mention how the color is applied, what the color may be or how it is achieved, and certainly does not indicate that it must last. *Id*. at 20:67–21:5. The Specification merely indicates that the "distinguishing color . . . show placement such that the placement of the sheath body and/or retention structure in the canaliculus or other body tissue structure can be readily detected by the patient." *Id.* Contrary to Patent Owner's arguments, there is nothing in the intrinsic record indicating that a plug's coloring must have some lasting quality. As with the other claim language discussed above, we will not read such a limitation into the claims.

The claims also do not require that the recited *functional groups* (claims 9 and 22) specifically "provide the desired solubility of the therapeutic agent in the matrix." Claims 9 and 22 recite that the hydrogel polymers of the independent claims "comprise functional groups," but do not state any structure for such functional groups nor any specific function for these groups. Ex. 1001, 30:46–47 (claim 9), 31:25–26 (claim 22).

The description of functional groups in the Specification is, "[f]or example, the core can comprise hydrogel that may promote solubility of hydrophilic treatment agent. In some embodiments, functional groups can be added to the polymer to provide the desired solubility of the therapeutic agent in the matrix. For example, functional groups can be attached to

silicone polymer." *Id.* at 27:26–32. This is neither an explicit nor implicit definition of the term *functional groups*, but rather identifies embodiments of the invention where functional groups provide the desired solubility of the therapeutic agent in the polymer matrix. *See Vitronics Corp. v. Conceptronic, Inc.*, 90 F.3d 1576, 1582 (Fed. Cir. 1996) ("The specification acts as a dictionary when it expressly defines terms used in the claims or when it defines terms by implication.").

Patent Owner's expert, Dr. Williams, testified at deposition that "the phrase 'functional group' [is not] a special technical term" and means "[a] group with a function," and does not imply or require any particular function. Ex. 1043, 40:7–41:8. Dr. Williams more specifically testified that he agreed that, and the person of ordinary skill in the art would have understood that, the term "functional group" was not limited to providing a desired solubility of a therapeutic agent in a matrix nor would have any other special meaning. *Id*. at 41:9–42:13; *cf.* Ex. 2014 ¶ 73 (Dr. Williams stating that the '082 patent defines functional groups as groups to provide the desired solubility of the therapeutic agent in the matrix.).

Thus, although the '082 patent's Specification identifies a type of functional group, which would certainly be within the scope of claims 9 and 22, it does not define the term. And, the claims do not state that the recited *functional groups* serve any specific purpose nor state their structure. Moreover, the term *functional groups* has no special meaning. Therefore, we do not interpret the claim term *functional groups* as asserted by the Patent Owner, but accord the term its ordinary and customary meaning as it would have been understood by the person of ordinary skill in the art, which according to Dr. Williams would be a (chemical) group that provides a

function. *See* Ex. 1043, 41:18–42:2. Again, we will not import limitations from the Specification into the claims. *Sjolund*, 847 F.2d at 1581–82.

C. Legal Standards for Anticipation and Obviousness

Regarding anticipation, our reviewing court has held:

> a patent is invalid [or unpatentable] as anticipated if "the [claimed] invention was described in" a patent or published application "before the invention by" the patentee. 35 U.S.C. § 102(e). In order to anticipate the claimed invention, a prior art reference must "disclose all elements of the claim within the four corners of the document," and it must "disclose those elements 'arranged as in the claim.'" *Net MoneyIN, Inc. v. VeriSign, Inc.*, 545 F.3d 1359, 1369 (Fed. Cir. 2008) (quoting *Connell v. Sears, Roebuck & Co.*, 722 F.2d 1542, 1548 (Fed. Cir. 1983)).

Microsoft Corp. v. Biscotti, Inc., 878 F.3d 1052, 1068 (Fed. Cir. 2017). Put another way, an anticipating reference must clearly and unequivocally disclose the claimed subject matter or direct those skilled in the art to the claimed subject matter without any need for picking, choosing, and combining various disclosures of the reference not directly related to each other by its teachings. *In re Arkley*, 455 F.2d 586, 587–88 (CCPA 1972) ("picking and choosing may be entirely proper in the making of a 103, obviousness rejection, . . . but it has no place in the making of a 102, anticipation rejection."); *see also Purdue Pharma L.P. v. Epic Pharma, LLC*, 811 F.3d 1345, 1358–59 (Fed. Cir. 2016) (distinct, but directly related disclosures of a reference may be combined in an optional, anticipating embodiment, e.g., a controlled-release pharmaceutical formulation specifically disclosed as an embodiment with claimed components *directly relates* to a disclosed list of therapeutic compounds useable therewith).

Regarding obviousness, the Supreme Court in *KSR International Co. v. Teleflex Inc.*, 550 U.S. 398 (2007), reaffirmed the framework for

determining obviousness as set forth in *Graham v. John Deere Co*., 383 U.S. 1 (1966). The *KSR* Court summarized the four factual inquiries set forth in *Graham* (383 U.S. at 17–18) that are applied in determining whether a claim is reasonably likely to be unpatentable as obvious under 35 U.S.C. § 103(a) as follows: (1) determining the scope and content of the prior art; (2) ascertaining the differences between the prior art and the claims at issue; (3) resolving the level of ordinary skill in the pertinent art; and (4) considering objective evidence indicating obviousness or non-obviousness.[12] *KSR*, 550 U.S. at 406.

"The combination of familiar elements according to known methods is likely to be obvious when it does no more than yield predictable results." *Id.* at 416. "[W]hen the question is whether a patent claiming the combination of elements of prior art is obvious," the answer depends on "whether the improvement is more than the predictable use of prior art elements according to their established functions." *Id.* at 417. "[C]ase law is clear that obviousness cannot be avoided simply by a showing of some degree of unpredictability in the art so long as there was a reasonable probability of success." *Pfizer, Inc. v. Apotex, Inc.*, 480 F.3d 1348, 1364 (Fed. Cir. 2007). "Reasonable expectation of success is assessed from the perspective of the person of ordinary skill in the art." *Life Techs. Inc. v. Clontech Labs. Inc.*, 224 F.3d 1320, 1326 (Fed. Cir. 2000).

With these standards in mind, we address the parties' arguments and the evidence of record below.

---

[12] No arguments directed to nor evidence of objective indicia of non-obviousness are of record in this case.

D. Claims 1–7, 9–16, 18–20, and 22–23 – Obviousness over Pritchard and Gillespie (Ground 2)

Petitioner challenges claims 1–7, 9–16, 18–20, and 22–23 as obvious over the prior art combination of Pritchard and Gillespie. Petitioner contends, "Pritchard expressly discloses all of the limitations recited in Claims 1–7, 9–16, 18–20, and 22–23 of the '082 Patent." Pet. 28 (citing Dana Declaration, Ex. 1036 ¶¶ 46–48). Petitioner identifies Pritchard as directed to the same field as the invention of independent claims 1, 11, and 18, that is, canalicular inserts, and identifies how and why Pritchard teaches every element of the claims. *See, e.g.*, Pet. 27–35 (citing generally Ex. 1010); *see also id.* at 36–37, 57 (claim chart citing Ex. 1010 ¶¶ 2, 13, 14, 35, 37–39, 41, 43, 44, 57, 131–132). Petitioner's premise for combining Pritchard and Gillespie is that, "to the extent that *Pritchard's* express and inherent disclosure of color is somehow deemed an insufficient disclosure of the "distinguishing color to show" limitation, then Claims 1–7, 9–16, 18–20, and 22–23 are obvious over *Pritchard* in view of *Gillespie*." Pet. 61. As discussed below, we conclude claims 1–7, 9–16, 18–20, and 22–23 would have been obvious over the prior art combination of Pritchard and Gillespie.

Petitioner asserts that the person of ordinary skill in the art would have been motivated to combine Gillespie's teachings with Pritchard's punctal plugs because Gillespie teaches that it is desirable to "enable a plug to be more easily visualized following insertion" because, normally, such plugs are "very difficult to see" because they are "extremely small" and may be "translucent." *Id.* at 61–63 (citing Ex. 1015 ¶¶ 1, 5–7, 11, 13; Ex. 1036 ¶¶ 73–77). Petitioner asserts that the person of ordinary skill in the art would have pigmented Pritchard's punctal plugs per Gillespie's teachings to

make them easier to see, use and locate, thus mitigating "one of the most common problems of these inserts." *Id*. at 63 (citing Ex. 1036 ¶ 78).

Petitioner also asserts that Gillespie evidences that the person of ordinary skill in the art would have been able to successfully make this combination and pigment either part or all of the Pritchard plugs because Gillespie states that, other than the substance used to cause the plug to be more easily visualized, "the rest of the plug body may be composed of any suitable material, including those presently used in the manufacture of such devices." *Id*. at 62–63 (citing Ex. 1015 ¶ 6).

We find Petitioner's positions on motivation for combining Pritchard and Gillespie, as well as the expectation of successfully doing so, persuasive and supported by the evidence. Gillespie unambiguously teaches that it is an advantage to color punctal plugs so that they contrast with the surrounding tissue once implanted and that such coloring may be added to "any suitable material, including those presently used in the manufacture of such devices," i.e., punctal plugs. Ex. 1015, Abstract, ¶¶ 1–56.

Regarding the expectation of success, Petitioner's evidence establishes that adding color to a drug-containing, hydrogel punctal plug would have been expected to succeed. Punctal plugs had been known and used as medical devices since the early 1960s. Pet. 15 (citing Ex. 1020; Ex. 1036 ¶¶ 31, 36). Punctal plugs that hold and deliver medications had also been well-known for decades preceding the '082 patent. *Id.* at 16–19 (citing Ex. 1036 ¶ 32; Ex. 1024; Ex. 1025).[13] Petitioner's expert, Dr. Dana,

[13] Although these cited references are not a part of the prior art combinations cited in the challenges against the '082 patent's claims, they are cited by Petitioner in the Petition and in Petitioner's expert's declaration as

testified that swellable, rod-like hydrogel plugs, like Pritchard's HEMA and gellan plugs, had been well-known and commercially successful for decades prior to the '082 patent. *See* Ex. 1036 ¶¶ 32–40 (citing Ex. 1020; Ex. 1022; Ex. 1023; Ex. 1026; Ex. 1027); *see also* Pet. 19–21. As of Gillespie's filing (May 10, 2001) and publication (November 14, 2002) dates, it was also well-known that the "Freeman" style of "true punctal plugs" (which Ex. 1020 (Baxter), Ex. 1022 (Freeman '750), and Ex. 1023 (Freeman '063) confirm were made of hydrogel materials) were available "in all different shapes, surface profiles, sizes, colors and inserter devices, depending on your preference and dexterity." Ex. 1028, 10; *see also* Pet. 23–24; and Ex. 1036 ¶¶ 32–45 (discussing the known materials, including colorants, for ocular inserts, further citing, *inter alia*, Ex. 1029 (drug-releasing, swellable, colored capsule for treatment of the eye), Ex. 1030 (ocular inserts of bio-erodible, swellable, hydrophilic, dexamethasone-containing, colored material), and Ex. 1031 (colored, bioactive-drug-containing, hydrogel devices for temporarily occluding a body lumen).

Petitioner's evidence establishes that the art of punctal plugs, as well as the use of hydrogels, therapeutic agents, and colorings therein, was mature as of the '082 patent. Thus, we are persuaded that the skilled artisan would have reasonably expected to successfully color the HEMA or gellan hydrogel, drug-containing, plugs of Pritchard with a colorant, as taught by

---

evidencing the state of the art and common knowledge (of the skilled artisan) in the years preceding the '082 patent's claims. *Genzyme Therapeutic Prods. Ltd. Partnership v. Biomarin Pharma. Inc.*, 825 F.3d 1360, 1369 (Fed. Cir. 2016) (citing *Ariosa Diagnostics v. Verinata Health, Inc.*, 805 F.3d 1359, 1365 (Fed. Cir. 2015) (the Board should, and may be required to, consider such evidence)).

Gillespie. Pritchard's plugs were "suitable material[s]" and, specifically, materials that were, then, "presently used in the manufacture of" punctal plugs, as taught by Gillespie. *See* Ex. 1015 ¶ 6.

Patent Owner presents several arguments alleging reasons why a person of ordinary skill in the art would not have combined Gillespie and Pritchard.

Patent Owner first argues that Gillespie is limited to "chemically inert materials," e.g., silastic rubber; therefore, it would not have been obvious to combine its teachings with those of Pritchard directed to hydrogel materials. PO Resp. 48–50 (citing Ex. 1015 ¶ 5; Ex. 2014 ¶ 89). Patent Owner argues "Gillespie is completely silent with regards to the use of hydrogel polymers, or any 'controllably swellable materials.'" *Id.* For these reasons, Patent Owner argues Petitioner failed to show there was an apparent reason to combine the references and the person of ordinary skill in the art would not have had a reasonable expectation of success.

This argument is not persuasive because Gillespie is clear that it is not limited to only chemically inert materials or to silastic rubber. *See, e.g.*, Pet. 62; Pet. Reply 19. Gillespie expressly states that a substance can be provided to a punctal plug

> to contrast with surrounding tissue, such that the use of the substance causes the plug to be more easily visualized than if the substance were not present. The rest of the plug body may be composed of any suitable material, including those presently used in the manufacture of such devices.

Ex. 1015 ¶ 6. As of Gillespie's filing and publication dates, i.e., the date where a survey of the punctal plug field would be made to ascertain what materials Gillespie intended to include in such a statement, it was well known that punctal plugs were made of hydrogel and included coloring

agents, along with therapeutic agents such as dexamethasone. *See, e.g.*, Ex. 1020, 255–56, 264 (disclosing "Freeman" plugs published in 1975 and plugs of hydrogel); Ex. 1022, Abstract, 1:8–5:15 (Freeman '750 disclosing, in 1974, punctal plugs shaped similarly to Pritchard's, made of HEMA hydrophilic polymer, impregnated with medication); Ex. 1023, Abstract, (Freeman '063 disclosing, in 1992, swellable punctal plugs shaped very similarly to Pritchard's, composed of hydrogel material); Ex. 1026, Abstract, ¶¶ 8, 34, 36 (disclosing punctal plugs made of hydrogel); Ex. 1029, Abstract, 2:25–4:61 (disclosing in 1974 ocular implants, colored to facilitate location, which are made of a gel which swells upon contact with tears); *see also* Pet. 15–27 (discussing this background of the relevant art). This is all knowledge the skilled artisan would have brought to bear on the development of a punctal plug, as claimed in the '082 patent. Patent Owner's own expert, Dr. Williams, testified at his deposition that hydrogel plugs were known as of Gillespie's date. Ex. 1043, 197:1–198:16.

Petitioner's expert witness, Dr. Dana, discussed these well-known features of punctal plugs and the state of the art in his declaration, which accompanied and was cited in the Petition. *See* Pet. 15–26; Ex. 1036 ¶¶ 31–45. Dr. Dana opined that the skilled artisan would have been motivated to combine Gillespie's colorings with Pritchard's "extremely small" and "difficult to see" punctal plugs to make them more easily visualized as contrasting with the surrounding tissue.[14] Ex. 1036 ¶¶ 74–78.

[14] Patent Owner chose not to depose Dr. Dana during this proceeding; therefore, his opinions are unrebutted by cross-examination.

As rebuttal to Patent Owner's arguments, Petitioner submits a declaration from its second expert, Dr. Lowman.[15] Ex. 1052; *see* Office Patent Trial Practice Guide 83 Fed. Reg. 156 (update Aug. 13, 2018). Dr. Lowman disagrees with Patent Owner's position and states that Gillespie is not limited to coloring silastic rubber devices, but confirms that "any suitable material, including those presently used in the manufacture of" punctal plugs, such as hydrogel, could be colored per Gillespie's teachings.

---

[15] Dr. Lowman was provided as, and is here considered, only as a rebuttal witness. *See* Pet. Reply. Petitioner proffers Dr. Lowman as a drug delivery and hydrogel expert. *Id.* at 4. Dr. Lowman professes to be and we find him to be an expert in such matters. *See* Ex. 1052 ¶¶ 1–15; Ex. 1053. Patent Owner argues Dr. Lowman is not a person of ordinary skill in the art, i.e., is not an ophthalmologist, but does not contest his knowledge or expertise in the matters of hydrogels or drug delivery. PO Sur-reply 3–4. Patent Owner also argues Dr. Lowman's opinions are proffered by Petitioner to fill gaps in the challenges made in the Petition. *Id.* at 5. Whether or not Dr. Lowman is a person of ordinary skill in the art is immaterial to whether we consider his opinions on the subjects of his expertise. A person need not be a person of ordinary skill in the art in order to testify as an expert under Rule 702, but rather must be "qualified in the pertinent art." *Sundance, Inc. v. DeMonte Fabricating Ltd.*, 550 F.3d 1356, 1363–64 (Fed. Cir. 2008). Dr. Lowman's opinions in rebuttal concerning hydrogels and drug delivery are relevant here and are considered as they apply to Patent Owner's arguments. Dr. Lowman is a chemist and, as discussed at Section III.A above, the person of ordinary skill in the art would have consulted such a chemist in developing a punctal plug. *See* Ex. 1052 ¶¶ 21–23. There is no requirement of a perfect match between the expert's experience and the relevant field. *SEB S.A. v. Montgomery Ward & Co.*, 594 F.3d 1360, 1373 (Fed. Cir. 2010). We disagree with Patent Owner's assertion that Petitioner has "back-filled" and conclude the evidence set forth by the Petition and the opinions of Dr. Dana are sufficient for Petitioner to carry its burden of showing the claims are unpatentable under Grounds 2 and 3.

Ex. 1052 ¶ 77; *see also* Pet. Reply 19 (discussing this portion of the Lowman Declaration). Dr. Lowman further opined that

> When *Gillespie* discloses "the plug body may be composed of any suitable material, including those presently used in the manufacture of such devices," one familiar with the relevant art would understand that suitable materials include hydrogel forming materials then used in the manufacture of punctum plugs. In other words, *Gillespie* contemplates a punctal plug made of hydrogel polymers.

Id. In view of the evidence cited and discussed by Dr. Dana and the Petition, we find Dr. Lowman's declaration rebuts Patent Owner's argument and further supports the conclusion that Gillespie taught or suggested coloring hydrogel plugs and that coloring would have been expected to be successful.

Patent Owner further argues that, even were Pritchard and Gillespie combined, there would have been no reasonable expectation that the color would be "sufficiently retained." PO Resp. 50–51. Patent Owner argues that Pritchard's light straw color was not retained in its gellan, which calls into question whether Gillespie's coloring could be applied. *Id.* (citing Ex. 2014 ¶ 93).

As an initial matter, the claims do not require that the recited "distinguishing color" be lasting or retained for any period of time. *See supra* Section III.B regarding Other Claim Construction Disputes. Therefore, Patent Owner's argument, on the whole, is not persuasive.

Moreover, the evidence indicates that hydrogel materials such as gellan can sustain color and that this quality would have been understood by the person of ordinary skill in the art. Ex. 1043, 116:12–14 (Dr. Williams testified that "[a] person of ordinary skill in the art would be led to believe

that certain hydrogels could sustain color."). Dr. Lowman states in his declaration that "[a]n experienced formulator," i.e., a chemist, who would be consulted by and would have contributed to the knowledge of the person of ordinary skill in the art, "would have known that hydrogels can be designed to sustain color until they have degraded." Ex. 1052 ¶ 58; *see also* Pet. Reply, 9–10 (generally citing the Lowman Declaration for this point), 14 (citing this paragraph, specifically). Dr. Lowman states that "*Pritchard* discloses exemplary hydrogel devices that certainly maintain their color." *Id.* ¶ 60 (citing Ex. 1010, claim 1, claim 13, ¶¶ 138, 140); *see also* Pet. Reply, 4–5 (discussing color retention). Thus, for these reasons, as well, Patent Owner's argument is not persuasive.

Patent Owner next argues that Gillespie's teachings are not applicable to drug-delivering punctal plugs. PO Resp. 51–55. Patent Owner concedes that "[i]t was well known that many coloring agents could be used to visually alter the appearance of a medicinal product," but argues the Handbook teaches that there were limitations to such uses because of possible stability or toxicity issues of some color agents. *Id.* (citing Ex. 1016, 22–24; Ex. 2014 ¶ 95). Patent Owner argues Gillespie is simply not related to drug delivery and that some coloring agents, e.g., fluorescein, are known to interact with 58 drugs, such as dexamethasone, and methylene blue interacts with 177 drugs. *Id.* at 53–54 (citing Ex. 2005; Ex. 2016; Ex. 2017; Ex. 2014 ¶ 98). Patent Owner argues that Pritchard's therapeutic agent silver was known to degrade a range of dyes. *Id.* at 54–55 (citing Ex. 2007; Ex. 2008; Ex. 2014 ¶ 99).

Patent Owner, thus, acknowledges that it was well known to color medicinal products (no more would be required by the claims) and identifies

that much was known about the potential limitations of using coloring agents and combining coloring agents with drugs—the interactions of various colors and drugs, the potential toxicities of certain colors, were understood. This evidences a level of predictability in such combinations, not unpredictability. The fact that *some* colors might not work is not evidence of unpredictability in the art or that coloring would not work, generally. "[O]bviousness cannot be avoided simply by a showing of some degree of unpredictability in the art so long as there was a reasonable probability of success." *Pfizer,* 480 F.3d at 1364. Furthermore, irrefutable evidence in the form of the Handbook, cited by both parties here, shows that a person of ordinary skill in the art had at least dozens of coloring agents that were generally regarded as safe to choose from when pigmenting a punctal plug, as taught by Gillespie, that included a therapeutic agent, as taught by Pritchard. *See* Ex. 1016.

As asserted by Petitioner (*see* Pet. Reply 21–24), Petitioner's expert, Dr. Lowman, points out that the claims merely require the presence of a distinguishing color, not a "coloring agent," thus, any specific concerns about the interactions between coloring agents and therapeutic agents, as argued by Patent Owner, is not wholly well-founded. Ex. 1052 ¶ 86, 90–93. However, considering the circumstance where a distinguishing color is achieved by supplying a coloring agent, for example the dyes or pigments of Gillespie, Dr. Lowman states that color additives were well known at the relevant time and routinely considered in combination with medicines. *Id.* (citing Ex. 1044; Ex. 1046, 21; Ex. 2014, 73; Ex. 2025, 8); *see also* Pet. Reply 4–5, 14, 19–23 (discussing coloring hydrogels and pharmaceuticals in the prior art as routine and straightforward). Contrary to the opinion of

Patent Owner's expert, Dr. Williams, Dr. Lowman explains that formulating a combination of a well-known drug that has been on the market for some time and another agent such as a color was straightforward for the person of ordinary skill in the art because the properties of the drug are known in greater detail. Ex. 1052 ¶¶ 88, 91–93. Dr. Lowman states that "[c]ompatibility is not a particular concern in follow-on formulations of known drugs," which are encompassed by the disclosure of Pritchard as well as the '082 patent and the scope of its claim term "therapeutic agent." *Id.* ¶¶ 87, 89. Dr. Lowman indicates that the types of drugs contemplated by Pritchard, for example, travoprost or dexamethasone (also Timolol), were such well-understood drugs that would be the subject of such "follow-on" formulations. *Id.* ¶¶ 88, 94–96.

Based on the analysis above, we conclude that Pritchard and Gillespie would have been combined by the person of ordinary skill in the art, as asserted by Petitioner, because there would have been motivation and a reasonable expectation of success to do so. Having so concluded, we now turn to Petitioner's evidence that this prior art combination teaches or suggests the limitations of the '082 patent's claims.

Claims 1, 11, and 18

As discussed above, Claims 1, 11, and 18 are the independent claims of the '082 patent and they are very similar to one another. *See supra* Section II.C; *see also* Ex. 1001, 30:20—27 (claim 1), 30:51–58 (claim 11 has all the limitations of claim 1 and further requires that the claimed body of material "swells when placed in the lacrimal canaliculus"), 31:8–17 (claim 18 has all the limitations of claim 1 and further requires that the claimed "therapeutic agent [is] selected from an anti-glaucoma agent, a

corticosteroid[,] an anti-microbial agent, and anti-allergy agent[,] or a non-steroidal anti-inflammatory agent"). We will address the differences in these claims in our analysis below, but both parties have addressed these claims together in their contentions and arguments. *See, e.g.*, Pet. 28–49, 57–64 (asserting the same, overlapping evidence for each independent claim); PO Resp. 27–33, 37–41, 44–55 (arguing over common limitations, but not distinguishing between independent claims). For these reasons, we also address these claims together.

Claim 1, 11, and 18 each recites as a preamble "[a] drug delivery system for insertion into a lacrimal canaliculus of a patient." Ex. 1001, 30:20–21, 30:51–52, 31:8–9. Claims 1 and 18 follow this preamble language with the open and inclusive transitional term "comprising" and claim 11 uses the transitional term "consisting essential [*sic*] of," however, neither party asserts there is any difference between these two transitional terms in view of the scope of the claims and the asserted prior art. *CIAS, Inc. v. Alliance Gaming Corp.*, 504 F.3d 1356, 1360 (Fed. Cir. 2007) ("In the patent claim context, the term 'comprising' is well understood to mean 'including but not limited to.'"); *PPG Indus. v. Guardian Indus. Corp*, 156 F.3d 1351, 1354 (Fed. Cir. 1998) ("By using the term 'consisting essentially of,' the drafter signals that the invention necessarily includes the listed ingredients and is open to unlisted ingredients that do not materially affect the basic and novel properties of the invention.").

Petitioner asserts that Pritchard teaches "[a] drug delivery system for insertion into a lacrimal canaliculus of a patient" in disclosing canalicular plugs to be placed into the punctal opening of the lacrimal duct and that such

plugs can be used to deliver therapeutic agents to the eye.[16] Pet. 28–29, 36–37 (citing Ex. 1010 ¶¶ 2, 13, 14, 35, 37–39, 41, 43, 44, 131–132, Figs. 1, 3, 3A; Ex. 1012, 3; Ex. 1036 ¶ 49).

Addressing the claims' next common element, Petitioner asserts Pritchard teaches "a therapeutic agent" in disclosing that its punctal plugs "may further comprise a therapeutic agent," as well as disclosing several specific examples of drugs that may be incorporated into and released by the punctal plug. Pet. 28–29, 38 (citing Ex. 1010 ¶¶ 38, 43, 131–132, claims 11, 21, 37, 58, 70; Ex. 1012, 3; Ex. 1036 ¶ 50).

Independent claim 18 further defines the commonly claimed *therapeutic agent* as "selected from an anti-glaucoma agent, a corticosteroid an anti-microbial agent, an anti-allergy agent or a non-steroidal anti-inflammatory agent." Ex. 1001, 31:10–12. Petitioner asserts Pritchard teaches this subject matter in disclosing the antimicrobial agents silver and Triclosan, as well as "anti-glaucoma agents, beta blockers, prostaglandins, corticosteroids, anti-fungal agents, antibiotics, [and] anti-inflammatories." Pet. 33–34, (citing Ex. 1010 ¶¶ 1, 44, 131, 132, 135; Ex. 1012, 5–15; Ex. 1036 ¶¶ 62–67). The Pritchard '368 provisional, incorporated by reference in Pritchard, as cited by the Petitioner and Dr. Dana, specifically discloses, *inter alia*, the corticosteroid anti-inflammatory agent dexamethasone, the non-steroidal anti-inflammatory agent ibuprofen, prostaglandin PGE1, the antifungal nystatin, the anti-glaucoma agents

[16] "Generally, the preamble does not limit the claims." *Allen Eng'g Corp. v. Bartell Indus., Inc.*, 299 F.3d 1336, 1346 (Fed. Cir. 2002). Regardless of whether the preamble is limiting here, Petitioner shows sufficiently that the recitation in the preamble is satisfied by the prior art.

timolol, latanoprost, and brimonidine, and the antibiotic agents triclosan and cephalexin, each held in gellan hydrogel. Ex. 1012, 5–15.

Addressing the claims' next common element, Petitioner asserts Pritchard teaches "a distinguishing color to show placement of the system in the lacrimal canaliculus of the patient" in disclosing that its hydrogel material plugs can be a light straw color. Pet. 29, 38–39 (citing Ex. 1010 ¶¶ 137–140; Ex. 1036 ¶ 51). Recognizing potential shortcomings in this position, Petitioner also asserts that "to the extent that Pritchard's express and inherent disclosure of color is somehow deemed an insufficient disclosure of the 'distinguishing color to show' limitation, then Claims 1–7, 9–16, 18–20, and 22–23 are obvious over *Pritchard* in view of *Gillespie*." *Id.* at 61. Petitioner asserts Gillespie teaches this limitation in disclosing a punctum plug that is colored to make it more easily visualized after insertion, that is, more readily visible or detectable to the recipient or caregiver. *Id.* at 62 (citing Ex. 1015 ¶¶ 1, 5–7, 11; Ex. 1036 ¶¶ 73–75). Petitioner asserts that Gillespie teaches that such coloring can be provided by adding a substance such as fluorescent material, reflective beads, quantum dots, dye, or pigment, which contrasts with surrounding tissue when the plug is in place. *Id.* at 62–63 (citing Ex. 1015 ¶¶ 7, 11; Ex. 1036 ¶¶ 76–78). Petitioner asserts that Pritchard and Gillespie would have been combined by the person of ordinary skill in the art for the reasons set forth above. *Id.* at 61–64.

Turning to the next common claim element, "a body of material to hold the therapeutic agent wherein the body of material comprises hydrogel polymers," Petitioner asserts Pritchard discloses numerous hydrogel polymers, teaches how to make them, discloses they are used as canalicular

inserts, and discloses the hydrogel holds a therapeutic agent. Pet. 29–30, 39–45 (citing Ex. 1010 ¶¶ 29, 38, 43, 52, 58, 61, 62, 86, 102, 104, 131–132, 139, 152, claims 11, 21, 37, 57, 58, 70, Figs. 2A, 2B, 7A, 7B; Ex. 1012, 3, 45; Ex. 1036 ¶¶ 53–54). Petitioner also asserts Gillespie teaches that punctal plugs have a body portion, which can be "any suitable material, including those presently used in the manufacture of such devices." *Id.* at 62–63 (citing Ex. 1015 ¶¶ 6, 7, 11).

Petitioner asserts that the next common claim element, "wherein the body of material is a cylindrical rod," is taught by Pritchard because it discloses throughout that its inserts / punctal plugs are preferably cylindrical in shape, depicts implants that are cylindrical in shape, and have bodies / middle neck / waist portions that are cylindrical rods. Pet. 30–31, 45–49 (citing Ex. 1010 ¶¶ 30, 36, 55, 65, 66, 75, 77, 79, 119, 138, 140, 152, Figs. 2A, 2B, 7A, 7B; Ex. 1012, 3; Ex. 1036 ¶¶ 56–57).

Independent claim 11 further defines the commonly claimed cylindrical rod body of material in that it "swells when placed in the lacrimal canaliculus of the patient." Ex. 1001, 30:56–58. Petitioner asserts Pritchard teaches this additional claim element because it "extensively discloses this phenomenon" and "emphasizes that numerous embodiments of the disclosed canalicular plugs include 'swellable devices that expand in volume in response to lacrimal fluid,'" and in some embodiments they swell anisotropically. Pet. 31–33, 54–58 (citing Ex. 1010 ¶¶ 8, 20, 22, 51–79, 156–161, Figs. 7A, 7B; Ex. 1036 ¶¶ 58–60).

Considering the claimed invention, as a whole, Dr. Dana opined that "[t]o a person of ordinary skill in the art, using swellable hydrogel polymers to construct cylindrical drug-eluting canalicular inserts for treating

ophthalmic conditions would have been known and understood before the '082 Patent." Ex. 1036 ¶¶ 38–45 (citing as background and common knowledge Ex. 1026 ¶¶ 14, 15, 34, 41, 45; Ex. 1027, 5:21–35, 7:10–8:32, 9:18–47, 13:60–68; Ex. 1020; Ex. 1025, 6:18–40; Ex. 1028; Ex. 1029, 2:38–40, 4:4–5; Ex. 1030; Ex. 1031, 4:20–23); *see also* Pet. 19–26 (citing the Dana Declaration for the same reason and discussing this same background of the technical field). Regarding Pritchard's and Gillespie's teachings, Dr. Dana stated, "[i]n my opinion, a person of ordinary skill in the art—who would, by definition, be familiar with this state of the art—would readily understand that the claims of the '082 Patent were anticipated by *Pritchard* or obvious based on *Pritchard* combined with *Gillespie*." Ex. 1036 ¶ 46. Dr. Dana opines:

> *Pritchard* discloses all of the limitations in these claims as arranged in those claims. That is, *Pritchard* discloses hydrogel canalicular inserts that are cylindrical rods, that are colored, that swell, that comprise functional groups, and that deliver a therapeutic agent to treat various ophthalmic conditions, such as dry eye, glaucoma, and post-surgical discomfort.

Id. ¶¶ 48–60 (citing the portions of Pritchard also cited by Petitioner, noted above). Dr. Dana further stated that "[t]o the extent that more is needed to show that the hydrogel canalicular inserts of Pritchard could have a distinguishing color, then a person of ordinary skill in the art would be motivated to combine Pritchard with . . . Gillespie." *Id.* ¶ 74. Dr. Dana states that Gillespie teaches "plugs and apparatus which enable a plug to be more easily visualized following insertion" and "discloses that '[b]roadly, this invention resides in punctum plug configurations which are more easily visualized, preferably allowing the presence and position of the plug to be seen by another person or by the recipient in a mirror." *Id.* ¶¶ 74–76 (citing

Ex. 1015 ¶¶ 1, 5, 11, 13). This is essentially the identical teaching of a "distinguishing color" as made in the Specification of the '082 patent. *Compare* Ex. 1015 ¶ 11, *with* Ex. 1001, 20:67–21:5. Dr. Dana states that Gillespie teaches that "the entire plug body[] is pigmented to constra[s]t with surrounding tissue." Ex. 1036 ¶ 76 (citing Ex. 1015 ¶ 11). Thus, Dr. Dana has explained why Pritchard and Gillespie would have been combined by the skilled artisan and how such a combination would work. *See* Pet. 61–64 (asserting the aforementioned portions of the Dana Declaration). Gillespie itself indicates that its coloring would predictably work with hydrogel plugs, as disclosed by Pritchard. Ex. 1015 ¶ 6.

Taking all of the above-referenced assertions and evidence into consideration, we find that Petitioner has accounted for each element of claims 1, 11, and 18, and the inventions claimed therein based on the teachings and suggestions of Pritchard and Gillespie. As noted above, Petitioner has likewise established that the person of ordinary skill would have been motivated to make this prior art combination and would have had a reasonable expectation of success in doing so.

Except for the claim element directed to "a distinguishing color to show placement of the system in the lacrimal canaliculus of the patient," Patent Owner does not assert that Pritchard fails to teach or suggest any limitation of claims 1, 11, and 18. *See generally* PO Resp.; *see, e.g., id.* at 31 (focusing argument on "distinguishing color to show placement" claim element). Patent Owner argues that Pritchard discloses "15 separate embodiments" that variously disclose the claim elements and that Petitioner has cherry picked features from these embodiments; however, this is an argument against anticipation by Pritchard and is not applicable to the

obviousness challenge. *See KSR*, 550 U.S. at 421 (picking one of a finite number of known solutions to a known problem is obvious); *Merck & Co. Inc. v. Biocraft Labs. Inc.*, 874 F.2d 804, 807 (Fed. Cir. 1989) (prior art "disclos[ing] a multitude of effective combinations does not render any particular formulation less obvious."); *In re Arkley*, 455 F.2d at 587 (picking and choosing from the teachings of a cited reference is entirely proper in the making of a case for obviousness). Patent Owner expressly agrees with our reading of Pritchard as the reference was discussed in the Institution Decision, that is, that Pritchard provides a "'menu' embrac[ing] a vast number of possible permutations and combinations of elements, including different punctal plug designs/shapes, different modes of administration, numerous classes of therapeutic agents, unknown and unknowable number of swellable materials defined by function, and other possible characteristics." PO Resp. 29. Even, assuming *arguendo*, that such a menu of choices was *more picking and choosing* than appropriate under an anticipation analysis, it provides both express disclosure of claim elements and a reason to combine them when analyzing obviousness.

Patent Owner argues "Petitioner has not made an obviousness argument with respect to Pritchard, and [has] foreclosed the ability to do so." PO Resp. 33. We disagree with Patent Owner. Petitioner's Ground 2 is based on obviousness in view of Pritchard and Gillespie and it expressly incorporates the anticipation rationale for Pritchard. *See* Pet. 61 ("For the reasons set forth in Ground 1, Pritchard anticipates Claims 1–7, 9–16, 18–20, and 22–23. Ocular incorporates by reference the facts and arguments of Ground 1.").

In addition to the arguments that Pritchard and Gillespie would not have been combined or that such a combination would not have been reasonably expected to succeed, which have been discussed above as not persuasive, Patent Owner also argues that Gillespie's punctal plugs have an outwardly exposed surface, thus, the combination of Pritchard and Gillespie does not teach or suggest an *intra*canalicular drug delivery device that contains a distinguishing color. PO Resp. 45–48. As discussed above at Section III.B, the claims do not require an intracanalicular, i.e., wholly within the lacrimal canaliculus, device. Therefore, this argument is not persuasive.

For the reasons above, we conclude Petitioner has proven by a preponderance of the evidence that independent claims 1, 11, and 18 would have been obvious over Pritchard and Gillespie.

Claim 2

Claim 2 depends from independent claim 1 and further requires "the system does not comprise a sheath body." Ex. 1001, 30:28–29. As discussed above at Section III.B, this claim language is accorded its ordinary meaning, i.e., a *sheath* is a cover and a *body* refers to a distinct mass, hence, a distinct cover. Although Petitioner's proposed interpretation of "sheath body" is more restrictive than the term's ordinary meaning, it nonetheless includes a material that covers, which falls within the scope of the ordinary meaning. *See* Pet. 12; *see also* Ex. 1036 ¶ 70.

Petitioner asserts that

> *Pritchard* discloses devices that are simply cylindrical pieces of hydrogel material that do not have a structure or material layered over it to prevent release of the therapeutic agent. *Id.*, ¶ 71; *see also* Ex. 1010, *Pritchard* at [0030]. *Pritchard* further discloses that hydrogel occlusive devices will achieve a more successful

> fit without an exterior constraint. Ex. 1010, [0052]. Accordingly, *Pritchard* discloses drug-eluting canalicular inserts that do not have a sheath body. *See* Ex. 1036, Dana Decl., ¶¶ 71-72.

Pet. 34–35; *see also id.* at 49–51 (citing Ex. 1010 ¶¶ 30, 52, 56–57, 61). Dr. Dana also opines that Pritchard discloses simple cylindrical pieces of hydrogel material as devices to release a therapeutic agent, without a covering and that the "person of ordinary skill in the art would immediately recognize that *Pritchard* discloses drug-eluting canalicular inserts that do not have a sheath body," as required by claim 2. Ex. 1036 ¶¶ 71–72; *see also* Pet. 34–35 (asserting the same).

Patent Owner does not directly contest Petitioner's assertions or evidence regarding the unpatentability of claim 2. *See generally* PO Resp.; *see also* Ex. 2014 (Dr. Williams does not discuss the matter).

We conclude Petitioner's evidence and assertions are sufficiently persuasive to prove by a preponderance of the evidence that claim 2 would have been obvious over Pritchard and Gillespie.

Claims 3–8, 12–17, 19–21

Claims 3–8 depend from independent claim 1, claims 12–17 depend from independent claim 11, and claims 19–21 depend from independent claim 18. These dependent claims are directed to certain therapeutic agents being included in the claimed drug delivery system or treatments for which the claimed system is used. Petitioner asserts that the claimed therapeutic agents and treatments would have been obvious over Pritchard and Gillespie.

Claims 3 and 12, like independent claim 18 discussed above, further require that "the therapeutic agent is selected from an anti-glaucoma agent, a corticosteroid, an anti-microbial agent, an anti-allergy agent or a non-

steroidal anti-inflammatory agent." Ex. 1001, 30:30–33, 30:59–62; *see also id.* at 31:10–12. Petitioner asserts the same evidence proves claims 3 and 12 to have been obvious over Pritchard and Gillespie as asserted for claim 18's respective limitation. Pet. 33–34, 51, 58, 59. Patent Owner does not directly contest Petitioner's assertions or evidence regarding the unpatentability of claim 3 or 12. *See generally* PO Resp.; *see also* Ex. 2014 (Dr. Williams does not discuss the matter).

Pritchard discloses a great variety of therapeutic agents for use in its hydrogel devices, including, for example the anti-glaucoma medication Timolol and the anti-microbial agents silver and Triclosan, as well as the corticosteroid agent dexamethasone, the non-steroidal anti-inflammatory agent ibuprofen, and anti-allergy agents such as antihistamines. Ex. 1010 ¶¶ 48, 131–137; Ex. 1012, 5–15; *see also* Ex. 1036 ¶¶ 62–67 (Dr. Dana discussing this evidence); *see also* Pet. 29, 33–34, 38, 51–53 (asserting Pritchard discloses such therapeutic agents). We conclude this is sufficient, and uncontroverted, evidence and Petitioner has proved by a preponderance of the evidence that claims 3 and 12 would have been obvious over Pritchard and Gillespie.

Claims 4, 13, and 19 further require that "the system is used to treat glaucoma, pre and post surgical treatments, dry eye or allergy." Ex. 1001, 30:34–36, 30:63–65, 31:18–20. Petitioner asserts that Pritchard discloses treating ocular dryness and dry eye, treating eye trauma from surgery, treating allergies, and treating glaucoma. Pet. 52, 58–60 (citing Ex. 1010 ¶ 24, claims 44, 77; Ex. 1012, 7, 14). Patent Owner does not directly contest Petitioner's assertions or evidence regarding the unpatentability of claim 4,

13, or 19. *See generally* PO Resp.; *see also* Ex. 2014 (Dr. Williams does not discuss the matter).

Pritchard teaches "using the device to treat at least one eye in a patient having at least one condition chosen from the group consisting of dry eye, seasonal allergy, and trauma caused by surgical correction." Ex. 1010, claim 44. Dr. Dana confirms that the person of ordinary skill in the art would have known Pritchard's punctal plugs could and would be used to treat such conditions. Ex. 1036 ¶ 64. Moreover, Gillespie confirms that punctal plugs are "a long term solution" for treating dry eye. Ex. 1015 ¶¶ 3–6; *see also* Pet. Reply 18 (asserting this disclosure of Gillespie). We conclude this is sufficient, and uncontroverted, evidence and Petitioner has proved by a preponderance of the evidence that claims 3 and 12 would have been obvious over Pritchard and Gillespie.

Claims 5, 14, and 20 further require that "the therapeutic agent is dexamethasone." Ex. 1001, 30:37–38, 30:66–67, 31:21–22. Petitioner asserts that Pritchard discloses dexamethasone as a therapeutic agent for use with its hydrogel punctal plugs. Pet. 52 (citing Ex. 1012, 6). Dr. Dana states that "[d]examethasone is an anti-inflammatory and can be used to treat pain and discomfort." Ex. 1036 ¶ 65; *see also* Pet. 34 (asserting this evidence regarding dexamethasone).

Patent Owner argues, "Pritchard and Gillespie do not teach or suggest an intracanalicular dexamethasone-delivery system that contains hydrogel polymers and has distinguishing color to show its placement in the intracanalicular tissue, as claimed in claims 5, 14 and 20. As an initial matter, Pritchard does not recite dexamethasone." PO Resp. 56 (citing Ex. 2014 ¶ 102). Patent Owner argues Pritchard provides the skilled artisan

no reason to select dexamethasone from the numerous options in the reference. *Id.* Patent Owner further argues that, even were dexamethasone selected by the skilled artisan, there would be no reason to combine it with Gillespie's coloring agents because Gillespie is altogether silent on drug delivery. *Id*. (citing Ex. 2014 ¶ 103). Patent Owner also argues that "dexamethasone is known to have adverse interactions with fluorescein, a widely used coloring agent" and "[n]owhere in Gillespie does it provide any guidance as to how to pick and choose appropriate coloring agents for dexamethasone." *Id.* at 56 (citing Ex. 2014 ¶ 104; Ex. 2005 (indicating fluorescein and dexamethasone have moderate interactions); Ex. 2017, 374–75 (disclosing adverse reactions to intravenous fluorescein angiography, which was co-administered with intravenous dexamethasone, but not expressly attributed to their interacting). At its cited portion, Dr. Williams's declaration mirrors this contention. Ex. 2014 ¶ 104.

We find Petitioner's evidence sufficient to meet its burden to show that the use of dexamethasone in Pritchard's punctal plugs, colored per the teachings of Gillespie, would have been obvious. We are not persuaded by Patent Owner's arguments.

Contrary to Patent Owner's argument, Pritchard does disclose dexamethasone used as a therapeutic. *See* Pet. Reply 16–17 (citing Ex. 2014; Ex. 1052; Ex. 1010; Ex. 1012). Pritchard's '368 provisional states:

> Materials set forth herein may be associated with therapeutic agents, including drugs, imaging agents, diagnostic agents, prophylactic agents, and bioactive agents. A therapeutic agent may be mixed with a gel precursor that is in solution or disposed in a solvent, and the gel may be formed. Alternatively, the therapeutic agent may be introduced after the gel is formed

> or at an intermediate point in the gel formation process. Certain embodiments include gels that are made in a first solvent and exposed to a second solvent that contains the therapeutic agent so as to load the therapeutic agent into the gel.

Ex. 1012, 5–6. Pritchard's '368 provisional then goes on to refer to dexamethasone used as a therapeutic agent. *Id.* at 6:12, 10:12–21. Stating that a reference, such as a provisional's disclosure is "incorporated herein by this reference," is sufficiently detailed and particular to plainly incorporate that reference in its entirety. *Paice LLC v. Ford Motor Co.*, 881 F.3d 894, 907 (Fed. Cir. 2018). Pritchard plainly incorporates all its provisionals by reference in their entirety. There is no dispute that the Pritchard '368 provisional is incorporated into Pritchard in its entirety. Hr'g Tr. 42:18–20 ("I want to make very clear for the record that Patent Owner is not arguing that Pritchard does not incorporate by reference its provisionals. That's not the argument."). Thus, all the provisionals' disclosures are a part of Pritchard. Thus, dexamethasone is clearly disclosed as a therapeutic agent in Pritchard.

In rebuttal, Dr. Lowman confirms that this disclosure in the Pritchard '368 provisional "discloses the use of dexamethasone as a therapeutic agent in [Pritchard's] hydrogel plugs for drug delivery." Ex. 1052 ¶ 67; *see also* Pet. Reply 16 (discussing the same). Dr. Lowman further explained, in rebuttal of Patent Owner's argument and Dr. Williams's testimony, that incorporating dexamethasone in a gellan device could be achieved in much the same way Pritchard describes incorporating silver into such a device and that dexamethasone would not alter the properties of the hydrogel device. Ex. 1052 ¶ 70 (discussing Ex. 1010 ¶ 139); *see also* Pet. Reply 16–17 (discussing the same).

Also, contrary to Patent Owner's argument, there is evidence as to why a skilled artisan would have selected dexamethasone as a therapeutic agent. Pet. 33–34 (discussing motivation to use dexamethasone and other therapeutic agents to treat ophthalmic conditions, citing Ex. 1036). Dr. Dana states that "[d]examethasone is an anti-inflammatory and can be used to treat pain and discomfort," thus, there would be a reason to select the agent from among Pritchard's plethora of choices. Ex. 1036 ¶ 65.

Further, the '082 patent's claims make no restrictions as to how to color a punctal plug body to provide a "distinguishing color." *See, e.g.*, Pet. 11 (discussing the '082 patent's limited disclosure regarding the claimed color); Pet. Reply, 1 (asserting Patent Owner imports limitations on color into the claims), 3–4 ("claims, however, simply require 'a distinguishing color to show placement"; "the '082 Patent has virtually no teaching on color"), 21 ("Nor did the '082 Patent advance the art as to how to include color in a pharmaceutical formulation."). The claims do not, for example, require the use of fluorescein, even if it is a "widely used coloring agent." Any means of coloring will do, so long as it is distinguishing. As evidenced by Pritchard (Ex. 1010 ¶¶ 87, 88, 107, 137–140), Gillespie (Ex. 1015 ¶¶ 6–13), and Handbook (Ex. 1016, 146–50), there is no shortage of methods of coloring and coloring agents for the skilled artisan to have chosen from in medical applications. In rebuttal to Patent Owner's arguments and Dr. Williams's testimony, Dr. Lowman explained that dexamethasone is a "drug that was generically available, both alone and in combination with other therapeutic agents, at the relevant time." Ex. 1052 ¶ 89 (citing Ex. 1045, 18, 21); *see also* Pet. Reply 22–23 (discussing this asserted evidence). Thus, concludes Dr. Lowman, the properties of this therapeutic

agent would have been well understood at the relevant time and it would be a mere straightforward formulation to combine dexamethasone with the punctal plugs disclosed by the Pritchard-Gillespie combination. Ex. 1052 ¶ 89. Dr. Lowman further responds to Patent Owner's argument, stating:

> It was within the ability of an experienced formulator at the relevant time to add color, likely chosen from materials that are very nearly pharmacotoxicologically inert, to a device for delivering a well-understood drug without causing adverse interactions.
>
> An experienced pharmaceutical formulator would have been able to include color in a pharmaceutical formulation based on what was known in the art at the relevant time.

Id. ¶¶ 92–93. As noted above, the skilled artisan would have such experience and knowledge. *See supra* Section III.A.

For the reasons above, we conclude Petitioner's evidence is sufficient, and Petitioner has proved by a preponderance of the evidence, that claims 5, 14, and 20 would have been obvious over Pritchard and Gillespie.

Claims 6 and 15 further require that "the therapeutic agent is an antibiotic or antifungal agent." Ex. 1001, 30:39–40, 31:1–2. Petitioner asserts that Pritchard discloses therapeutic agents, including antibiotics and antifungal agents. Pet. 52, 59 (citing Ex. 1012, 6, 7, 12–14). Dr. Dana states the same in his declaration. Ex. 1036 ¶ 66. Patent Owner does not directly contest Petitioner's assertions or evidence regarding the unpatentability of claims 6 or 15. *See generally* PO Resp.; *see also* Ex. 2014 (Dr. Williams does not discuss the matter).

The Pritchard '368 provisional discloses "a drug or other therapeutic substance may be associated with the implant, which may serve as a delivery vehicle for delivery or release of the drug" and that "[t]herapeutic agents

include . . . antibiotics." Ex. 1012, 3:19–21, 6:4–6; *see also* Pet. 52 (disusing this evidence). The Pritchard '368 provisional also discloses the therapeutic agent can be an antifungal. Ex. 1012, 12:14; *see also* Pet. 52. We conclude this is sufficient, and uncontroverted, evidence and Petitioner has proved by a preponderance of the evidence that claims 6 and 15 would have been obvious over Pritchard and Gillespie.

Claims 7 and 16 further require that "the therapeutic agent is a prostaglandin, a prostaglandin precursor, a beta-blocker, or a prostaglandin analog." Ex. 1001, 30:41–43, 31:3–5. Petitioner asserts this is taught by Pritchard. Pet. 33–34, 53, 59 (citing Ex. 1012, 7, 12; Ex. 1036 ¶¶ 62–67). Patent Owner does not expressly argue the patentability of claims 7 or 16 or directly contest Petitioner's assertions or evidence regarding their unpatentability. *See generally* PO Resp.; *see also* Ex. 2014 (Dr. Williams does not discuss the matter).

The Pritchard '368 provisional discloses hydrogel punctal plugs can include a beta blocker or prostaglandins as a therapeutic agent. Ex. 1012, 7:10, 12:6; *see also* Pet. 53 (discussing same). Dr. Dana confirms this disclosure, as it applies to claims 7 and 16. Ex. 1036 ¶ 67; *see also* Pet. 33–34. We conclude this is sufficient, and uncontroverted, evidence and Petitioner has proved by a preponderance of the evidence that claims 7 and 16 would have been obvious over Pritchard and Gillespie.

Claims 9 and 22

Claim 9 depends from independent claim 1 and claim 22 depends from independent claim 18. Each of claim 9 and 22 requires "the polymers comprise functional groups." Ex. 1001, 30:46–47, 31:25–26. We addressed the meaning of the term "functional groups" above at Section III.B,

concluding the term should be accorded its ordinary and customary meaning as it would have been understood by the person of ordinary skill in the art.

Petitioner asserts that Pritchard teaches devices with polymers having functional groups because Pritchard expressly states that its hydrogel devices have polymers, which effectively bind metals due to functional groups, and when the devices have cross-linked first and second polymers, either can have functional groups. Pet. 33, 54–54 (citing Ex. 1010 ¶¶ 86, 100–105; Ex. 1036 ¶ 61). Dr. Dana also testified that Pritchard teaches functional groups with such disclosure, which discloses the claimed subject matter of claims 9 and 22. Ex. 1036 ¶ 61; *see also* Pet. 33.

Patent Owner argues Pritchard does not disclose the claimed "functional groups" because Pritchard does not disclose functional groups that "provide the desired solubility of the therapeutic agent in the matrix." PO Resp. 43. This argument is not persuasive because, as discussed above, this is not a claim limitation and the claim term "functional groups" is not interpreted to require providing desired solubility of the therapeutic agent in the matrix.

We conclude Petitioner's evidence is sufficient and Petitioner has proved by a preponderance of the evidence that claims 9 and 22 would have been obvious over Pritchard and Gillespie.

Claims 10 and 23

Claim 10 depends from independent claim 1 and claim 23 depends from independent claim 18. Each of claims 10 and 23, like claim 11 discussed above, further requires that "the hydrogel swells when the system is inserted into the lacrimal canaliculus of a patient." Ex. 1001, 30:48–50, 31:27–29; *see also id.* at 30:56–58. Petitioner asserts the same evidence for

claims 10 and 23 as asserted for the obviousness of claim 11 over Pritchard and Gillespie. Pet. 31–33, 54–57, 61.

Patent Owner does not expressly argue the patentability of claims 10 or 23, or directly contest Petitioner's assertions or evidence regarding their unpatentability. *See generally* PO Resp.; *see also* Ex. 2014 (Dr. Williams does not discuss the matter).

Pritchard extensively teaches hydrogel punctal plugs that swell when inserted into the lacrimal canaliculus. *See e.g.*, Ex. 1010 ¶ 22; *see also* Pet. 54–57 (discussing this limitation and Pritchard's disclosure). Dr. Dana also discusses this fact, at length. Ex. 1036 ¶¶ 58–60 (citing Ex. 1010 ¶¶ 20, 22, 51–61, Figs. 7A, 7B). We conclude Petitioner's evidence is sufficient, and uncontroverted, and Petitioner has proved by a preponderance of the evidence that claims 10 and 23 would have been obvious over Pritchard and Gillespie.

Summary for Ground 2

To summarize, for the reasons above, we find that Petitioner has proven by a preponderance of the evidence the obviousness and unpatentability of claims 1–7, 9–16, 18–20, and 22–23 over Pritchard and Gillespie.

E. Claims 8, 17, and 21 – Obviousness Over Pritchard, Gillespie, and Hellberg (Ground 3)

Claims 8, 17, and 21 depend, respectively, from independent claims 1, 11, and 18 and further require that "the therapeutic agent is travoprost." Ex. 1001, 30:44–45, 31:6–7.

Petitioner asserts that Hellberg, which discloses treating glaucoma with travoprost (e.g., topically), would have been obvious to combine with Pritchard and Gillespie for teaching using travoprost as a therapeutic agent

to treat glaucoma. Pet. 64–66 (citing Ex. 1017, 5:40–46, 7:56–62, claim 4; Ex. 1036 ¶ 80). Petitioner asserts that the skilled artisan would have been motivated to use Hellberg's travoprost as a glaucoma treating therapeutic agent and as a substitutable, equivalent alternative for Pritchard's disclosed therapeutic agents, e.g., latanoprost and bimatoprost. *Id.* at 65–66. Dr. Dana confirms this motivation to use travoprost, as disclosed by Hellberg, in a punctal plug as taught by the Pritchard-Gillespie combination. Ex. 1036 ¶¶ 79–80. Dr. Dana also testified that travoprost was a well-known anti-glaucoma drug as of Hellberg's issue date (2003), and was an equivalent alternative to latanoprost and brimonidine, which are disclosed by Pritchard as therapeutic agents. Ex. 1036 ¶¶ 80–81 (citing Ex. 1017, 7:56–58; Ex. 1012, 14–17); *see also* Pet. 65–66 (asserting the same).

Patent Owner argues that Hellberg cannot cure the deficiencies of Pritchard and Gillespie. PO Resp. 59 (citing Ex. 2014 ¶¶ 110–111). Patent Owner also argues that there is no evidence that the skilled artisan would have selected travoprost individually to treat glaucoma because Hellberg describes a combination therapy using, e.g., travoprost, and a prostaglandin synthesis inhibitor. *Id.* (citing Ex. 1017, Abstract, claim 1; Ex. 2014 ¶ 112).

This argument is not persuasive. First, we do not find any deficiencies in Pritchard and Gillespie. Dr. Dana's testimony indicates that Hellberg teaches travoprost was a known anti-glaucoma drug. Ex. 1036 ¶ 81; *see also* Pet. 66 (citing Dana Declaration). Pritchard discloses that anti-glaucoma therapeutic agents are used with its gellan-based punctal plugs. Ex. 1010 ¶ 48; Ex. 1012, 14:15–17; *see also* Ex. 1036 ¶ 80 (discussing Pritchard's teaching of anti-glaucoma drugs, e.g., timolol, latanoprost, and brimonidine); *see also* Pet. 2–3, 27, 29, 33–34, 51–53, 65–

66 (discussing Pritchard's therapeutic agents, including anti-glaucoma drugs). Whether the skilled artisan would have selected travoprost individually or in combination with a prostaglandin inhibitor is immaterial because the claims do not preclude more than one therapeutic agent. Thus, we conclude the skilled artisan would have selected an anti-glaucoma drug to incorporate into Pritchard's devices and that travoprost is such a (well-known) drug, hence there was motivation to use it, as stated by Dr. Dana.

Patent Owner also argues that the skilled artisan would not have believed travoprost to be an equivalent alternative to latanoprost or bimatoprost, which are disclosed by Pritchard, because they have different potencies. PO Resp. 59 (citing Ex. 2014 ¶ 113). Patent Owner argues that because travoprost is more potent (marketed in a 0.004% formulation) than bimatoprost (marketed as a 0.01% or 0.03% formulation), and less potent than latanoprost (marketed as a 0.005% formulation), it is not interchangeable for use in a punctal plug. *Id.* at 59–60 (citing Ex. 2018; Ex. 2019; Ex. 2020; Ex. 2014 ¶ 113).

As rebuttal to this argument, Dr. Lowman testified that travoprost, latanoprost, bimatoprost, and unoprostone are "commercially available alternatives," as evidenced by the Physicians' Desk Reference for Ophthalmic Medicines (PDR-O). Ex. 1052 ¶¶ 100–101 (citing Ex. 1045, 24, 26 (including travoprost in a very short list of glaucoma drugs); *see also* Pet. Reply, 24–25 (asserting this evidence). Pritchard discloses that its punctal plugs' "therapeutic agents include anti-glaucoma drugs, e.g., timolol, dorzolamide hydrochloride, latanoprost, and brimonidine (see also: 1998 Physicians' Desk Reference for Ophthalmology)." Ex. 1012, 14:15–17; *see also* Pet. 51 (discussing Pritchard's disclosure of anti-glaucoma drugs).

Based on Patent Owner's evidence on potencies, Pritchard's disclosed anti-glaucoma drugs latanoprost and brimonidine have potencies that bracket that of travoprost, which does not support the contention that the skilled artisan would have found travoprost's potency an obstacle to its use, but supports the skilled artisan would have found travoprost to be interchangeable with at least one of latanoprost and brimonidine. Dr. Lowman testified that adjusting the dosage of the drug to the punctal plug means of delivery would be a matter of routine design work. Ex. 1052 ¶¶ 108–109; *see also* Pet. Reply, 26 (addressing this issue).

We conclude that Petitioner has shown by a preponderance of the evidence that claims 8, 17, and 21 would have been obvious over Pritchard, Gillespie, and Hellberg. The prior art combination teaches or suggests each limitation of these claims, there was motivation to make the combination, and there would have been a reasonable expectation of success.

F. Deficiencies of Ground 1, Ground 4, and Ground 5

We conclude that Petitioner's challenges under Grounds 1, 4, and 5 are not supported by a preponderance of the evidence. We explain why below.

Under Ground 1, Petitioner challenges claims 1–7, 9–16, 18–20, and 22–23 as anticipated by Pritchard. We have discussed above how Pritchard discloses each element of claim 1, except for the limitation requiring "distinguishing color to show placement of the system in the lacrimal canaliculus of the patient." *See* Ex. 1001, 30:22–24. As we discussed in Section III.B, above, we accord this claim language its ordinary meaning as it would have been understood by a person of ordinary skill in the art. However, that ordinary meaning includes the understanding that the color

must show (distinguish) the system as it sits in the lacrimal canaliculus of the patient, e.g., a patient must be able to see the plug and distinguish it from its environment of tissue.

Petitioner asserts that Pritchard's disclosure of a device with a light straw color satisfies this limitation. Pet. 29, 38–39 (citing Ex. 1010 ¶¶ 137–140; Ex. 1036 ¶ 51). Dr. Dana opined that this light straw color was a distinguishing color because it "improves visibility" of the device and makes it "easier to see" because it "is not clear or translucent," but made no mention as to whether the light straw color would be visible in the context of the device being implanted in a patient's eye. Ex. 1036 ¶¶ 51–52.

Patent Owner argues that the light straw color simply making the device easier to see does not meet the claim limitation of a distinguishing color that shows placement of the drug delivery system in the lacrimal canaliculus. PO Resp. 37–38. Patent Owner argues, and this argument is supported by Dr. Williams's testimony, that such a color must distinguish the device from the patient's surrounding tissue to meet the claim limitation. *Id.* at 38 (citing Ex. 2014 ¶ 65). Dr. Williams testified that "the "light straw color" asserted by Petitioner "is inadequate to distinguish an intracanalicular punctal plug from the surrounding tissue of the canaliculus." Ex. 2014 ¶ 65. Dr. Williams further testified that "[f]or color to be distinguishing, it needs to be sufficiently saturated with pigmentation that is in contrast to the color of the skin as well as the canalicular tissue." *Id.* ¶ 66. Dr. Williams concluded that the light straw color relied upon by Petitioner is so close to the color of skin and canalicular tissue, it is not a distinguishing color. *Id.* ¶ 67; *see also* PO Resp. 39 (making this argument).

Petitioner provided Dr. Lowman's testimony as a rebuttal to this argument. Ex. 1052 ¶ 61; *see also* Pet. Reply, 5–6 (discussing placement as an act), 15–16 (asserting the Lowman Declaration as support). However, Dr. Lowman, like Dr. Dana, opined only that the light straw color of Pritchard's device was a distinguishable color because it is observable; it is a color rather than clear and colorless. *Id.* ¶ 63. Dr. Lowman never indicates that Pritchard's light straw color is distinguishable with respect to surrounding tissue.

For these reasons, we conclude Petitioner failed to establish by a preponderance of the evidence that Pritchard disclosed each limitation of the claims. Therefore, Ground 1 of the Petition fails.

Petitioner asserts Ground 4 as an alternative to Ground 2 and, instead of combining Pritchard with Gillespie, combines Pritchard with Handbook in contending claims 1–7, 9–16, 18–20, and 22–23 would have been obvious. Pet. 66–68. Petitioner's premise for Ground 4 is that Handbook includes a section disclosing coloring agents as used in medicinal products to make them distinctive to prevent counterfeiting and to make commercial products more uniform in appearance. *Id.* (citing Ex. 1016, 146–53). Petitioner argues the skilled artisan would have been motivated to color Pritchard's devices as taught by Handbook for these reasons. *Id.* at 67.

We agree with Patent Owner's argument that the Handbook is silent on using its coloring agents for devices of the type disclosed by Pritchard. PO Resp. 62. Handbook is a general disclosure of the applicability of coloring agents to pharmaceutical products and lists some specific applications, such as in coated tablets, uncoated tablets, hard and soft gelatin capsules, liquid oral preparations, oral and topical formulations, and

cosmetics. *See* Ex. 1016, 146–53. Although Handbook assuages concerns over certain adverse effects by explaining that "continuous review, over many years, by such bodies as the FDA, has resulted in a list of permitted colors which are generally regarded as free of serious adverse toxicological effects," and that coloring agents "associated with adverse effects" relate to "a relatively small number of people," we are not persuaded on this record that such teachings or others of Handbook provide sufficient indication that Handbook's teachings relate to the use of its coloring agents to impart color to an implantable device. *Id*. at 148.

Further, Handbook's discussion of using a coloring agent to impart a distinctive or distinguishing color to a medicinal product is in the context manufacturing and marketing—to distinguish one product by its color from another. There is no suggestion in Handbook that such coloring agents are sufficient or suitable to provide a distinguishing color to show placement of an implant in an eye structure, as claimed. Insofar as Dr. Dana provides testimony that a person of skill in the art would have been motivated to combine the '"color' teachings of the Handbook to make the inserts of Pritchard easier to see" (Ex. 1036 ¶ 84), we note that discussion does not explain sufficiently how Handbook teaches or suggests the coloring agents are suitable for punctum plugs or any implant. Thus, we conclude Petitioner's case under Ground 4 lacks sufficient evidence that the skilled artisan would have motivation to combine Handbook with Pritchard.

Petitioner asserts Ground 5 as an alternative to Ground 3 and, instead of combining Pritchard and Hellberg with Gillespie, combines Pritchard and Hellberg with Handbook so as to have rendered claims 8, 17, and 21 obvious. Pet. 68–69. Petitioner's premise for Ground 5 is essentially the

same as those for Grounds 3 and 4—that it would have been obvious to use a colorant in Pritchard's devices as taught by Handbook, and that it would have been obvious to use travoprost as the therapeutic agent as taught by Hellberg, as discussed above. Patent Owner essentially invokes the same arguments over this Ground 5 as presented for Ground 4. PO Resp. 66. For the reasons discussed above regarding Ground 4, we find Petitioner has not established by a preponderance of the evidence that the claims would have been obvious over Pritchard, Handbook, and Hellberg.

IV. MOTIONS TO STRIKE AND MOTIONS TO EXCLUDE

A. PATENT OWNER'S MOTIONS

Patent Owner's Motion to Strike Petitioner's Reply and Relied Upon Evidence

Patent Owner filed a Motion to Strike Petitioner's Reply and Relied Upon Evidence, asserting the Reply and evidence relied upon therein are directed to "new theories of unpatentability and new evidence for the first time." Paper 36 ("PO Mot. Strike"). Patent Owner requests the following portions of the Reply and evidence be stricken: Pet. Reply, 4–5, 9–10, 13–14, 16–19, 20–21, 24–26; Ex. 1052 (Lowman Declaration) ¶¶ 46, 49, 50–52, 54, 64, 67–74, 77, 80–81, 83, 84, 100, 103, 106–107, 109–111; Ex. 1011 (Pritchard '132 provisional); Ex. 1024 (US. 6,196,993 B1 to Cohan); Ex. 1028 (Scot Morris, *Plugs, Drugs and Tears: a Dry Eye Update, Part Two*, OPTOMETRIC MANAGEMENT 36–42, 70 (Oct. 2002)); Ex. 1040 (Chris T. White, *This Just In: Transilluminating the Canaliculus*, Review of Optometry (May 28, 2002)); Ex. 1041 (US 2002/0198453 A1 by Herrick); Ex. 1042 (ARTHUR H. KIBBE, PH.D., HANDBOOK OF PHARMACEUTICAL EXCIPIENTS (2000)); Ex. 1044 (US FDA, Color Additives History (2003)); Ex. 1045 (PHYSICIANS' DESK REFERENCE FOR OPHTHALMIC MEDICINES

(2004)); Ex. 1047 (Anthony M. Lowman, *Biomaterials in Drug Delivery, in* BIOMEDICAL DEVICES AND THEIR APPLICATIONS (D.Shi ed.) 1–31 (2004)); Ex. 1049 (Hiroshi Nishida & Harman M. Risemberg, Silver Nitrate Ophthalmic Solution and Chemical Conjunctivitis 56(3) Pediatrics 368–73 (1975)); Ex. 1050 (US FDA, Guidance for Industry, FDA Staff, Eye Care Professionals, and Consumers Decorative, Non-corrective Contact Lenses (2006)). *See id.* at Exhibit 1. Petitioner opposed Patent Owner's Motion to Strike. Paper 39 ("Pet. Opp. PO Mot. Strike").

Patent Owner takes issue with the Lowman Declaration (Ex. 1052). PO Mot. Strike, 2. Patent Owner argues that because Dr. Lowman is a chemist, not an ophthalmologist, he is not a person of ordinary skill in the art and his opinions should not be considered. *Id.* at 2–4. Patent Owner argues Dr. Lowman's testimony backfills the Petition with new argument and advances new theories of unpatentability not made in the Petition. *Id.* Patent Owner argues that Dr. Lowman for the first time asserts that the person of ordinary skill would have consulted a chemist, seeking to change the definition of the person of ordinary skill in the art. *Id.* at 3; *see also* Pet. Reply 9–10.

Patent Owner argues that the Lowman Declaration introduced new evidence and a new theory of unpatentability that focuses on the Pritchard '132 provisional (Ex. 1011) disclosure of the Opaque Herrick Lacrimal Plug as teaching a visible plug with the claimed distinguishing color. PO Mot. Strike, 4–5. Similarly, Patent Owner argues that the Lowman Declaration makes the new assertion that silver is an imaging agent (energy obstructing) and, so, the silver in Pritchard's plugs would allow easier transillumination detection, i.e., visibility. *Id.* at 5–6.

Although it is somewhat unclear, Patent Owner argues that Dr. Lowman's testimony regarding colored contact lenses in the prior art evidencing that color could be sustained in hydrogel is a new theory that the prior art teaches a "distinguishing color," different from the "light straw color" of Pritchard's disclosure. PO Mot. Strike, 6. Patent Owner argues that this testimony was not responsive to Patent Owner's argument that Pritchard did not teach a lasting color. *Id.*

Patent Owner also argues that Dr. Lowman's testimony (and citation to Ex. 1045 and a new portion of Ex. 1028) and the related portions of Petitioner's Reply (pages 17–18) on dexamethasone make a new argument on a motivation to use the drug. *Id.* at 7.

Patent Owner argues that the Petition never discusses "how to apply *Gillespie's* color to *Pritchard*," or "how *Gillespie's* color in punctal plugs made of chemically inert materials could have possibly applied to the drug-eluting hydrogel device of *Pritchard*." *Id.* at 8. Patent Owner argues that Dr. Lowman's testimony that Gillespie contemplated hydrogel materials for punctal plugs is new and was not responsive to Patent Owner's arguments. *Id.* at 8–9.

Finally, Patent Owner argues that Dr. Lowman's testimony concerning a motivation to select travoprost as a therapeutic agent, as recited in claims 8, 17, and 21, which relied on Ex. 1045 (PDR), is also a new theory. *Id.* at 9–10.

Petitioner opposes Patent Owner's Motion to Strike and argues Dr. Lowman's declaration, and its Reply, directly respond to Patent Owner's arguments (in the Response) and Dr. Williams's opinions in his declaration (Ex. 2014). Pet. Opp. PO Mot. Strike, 1. Petitioner does not dispute that

Dr. Lowman's Declaration includes additional testimony and evidence beyond that of the Petition, but argues it was not required to anticipate the arguments presented in Patent Owner's Response (or expert's testimony). *Id.* (citing *Idemitsu Kosan Co. v. SFC Co.*, 870 F.3d 1376, 1381 (Fed. Cir. 2017) (Petitioner is entitled to counter arguments first raised by Patent Owner; preemptive evidence and arguments by Petitioner are not required).

Petitioner argues that its Reply is not backfilling the Petition, rather, it corrects Dr. Williams's testimony's mischaracterizations of the art and rehabilitates how a skilled artisan would read Pritchard, Gillespie, and Hellberg. *Id.* at 2. Regarding Dr. Lowman's experience and perspective as a chemist, Petitioner argues this testimony rebuts Dr. Williams's opinions on material chemistry and formulations. *Id.* at 3. Patent Owner contends Dr. Lowman testifies as an expert witness regarding pharmaceutics and collaboration with ophthalmologists, not as a person of ordinary skill in the art. *Id.* at 3, n.1.

Regarding Dr. Lowman's testimony on "distinguishing color" and the Herrick prior art plugs, and the related portions of the Reply, Petitioner argues it was Patent Owner that introduced a discussion of Herrick's plugs in its Response as evidence to distinguish Pritchard and Gillespie. *Id.* at 4 (citing PO Resp. 7–8, 38–39 (discussing the transillumination technology used to visualize Herrick's drug-free, blue, opaque plugs in use). Petitioner argues Dr. Lowman's discussion of Herrick's technology (Ex. 1040; Ex. 1041; Ex. 1011) is not creating a new theory, but rebuts Dr. Williams's speculation on the prior art and how transillumination works. *Id.* at 5. Further, regarding transillumination being a means to identify the claimed "distinguishing color," Petitioner argues that Patent Owner understood

(admitted) that Petitioner's theory of such a distinguishing color relied on Pritchard's examples of light straw colored pugs with suspended silver particles—Petitioner argues Dr. Lowman's discussion of energy blocking by such particles directly rebuts Dr. Williams's testimony on color and the prior art. *Id.* at 6.

Regarding Dr. Lowman's testimony on colored hydrogel materials, for example, colored hydrogel contact lenses, and the related Ex. 1050 and Ex. 1011, Petitioner argues that such evidence rebuts Dr. Williams's opinion that Pritchard and Gillespie do not provide the skilled artisan a reasonable expectation that color could be retained in hydrogel punctal plugs under physiological conditions. Pet. Opp. PO Mot. Strike, 5–6 (citing PO Resp. 50–51; Ex. 2014 ¶¶ 92–93).

Regarding Dr. Lowman's testimony on Pritchard's disclosure of dexamethasone and selecting dexamethasone as a therapeutic agent, Petitioner argues this rebuts Dr. Williams's (and Patent Owner's) position that the skilled artisan would not have had a reason to select dexamethasone because it is so different from silver. *Id.* at 6–7. Petitioner argues that Dr. Lowman's testimony on dexamethasone discusses the Physician's Desk Reference because Dr. Williams discussed it, and to explain why, contrary to Dr. Williams's position, the skilled artisan would focus on using dexamethasone (and silver). *Id.* at 7 (discussing Ex. 1045). Petitioner argues this testimony illuminates how a skilled artisan would have read Pritchard, but is not a new unpatentability theory. *Id.* Petitioner argues that Dr. Lowman's testimony, and Petitioner's Reply, are consistent with the Petition on anticipation and obviousness challenges to claims 5, 14, and 20. *Id.* (citing Pet. 27–49, 52, 57–64, 66–68).

Regarding Patent Owner's argument that the Petitioner does not set forth how Pritchard and Gillespie could be combined, Petitioner first points out that the challenged exhibits, Ex. 1002, Ex. 1011, and Ex. 1028, were provided with the Petition and cannot be considered new. *Id.* at 8. Petitioner argues that Patent Owner directly challenged the Pritchard-Gillespie combination by arguing Gillespie taught away from drug-delivering punctal plugs and that the skilled artisan would have not had a reasonable expectation of successfully adding color to an intracanalicular drug delivery device. *Id.* (citing PO Resp. 53, 55; Ex. 2014 ¶¶ 97, 100). Petitioner argues Dr. Lowman's testimony rebuts these arguments by evidencing color retention in hydrogel material (e.g., Gellan gum), that Gillespie is not limited to silastic rubber material, and that, to the contrary, Gillespie is directed to *any suitable materials, including those that were presently used in the manufacturing of punctal plugs*, which included hydrogels as taught by Pritchard. *Id.* at 8–9.

Regarding Patent Owner's argument about Dr. Lowman's testimony on travoprost, Petitioner argues that Dr. Lowman responds to Patent Owner's and Dr. Williams's assertions that the skilled artisan would have had no reason to select only travoprost from Hellberg's disclosure and that the skilled artisan would have had no reason to expect travoprost to be suitable for punctal plugs. *Id.* at 9. Petitioner argues that Dr. Lowman's testimony, that the skilled artisan's choices for a glaucoma treating drug were limited and travoprost would be at or near the top of the list, is consistent with Petitioner's positions in the Petition. *Id.* (citing Pet. 27–66, 68–69).

"A reply may only respond to arguments raised in the corresponding opposition, patent owner preliminary response, or patent owner response." 37 C.F.R. § 42.23(b) (2019). The Board's Trial Practice Guide clarifies:

> A petitioner may file a reply to a patent owner response, and a patent owner may file a reply to an opposition to a motion to amend. 37 C.F.R. § 42.23. Additionally, in response to issues arising from the Supreme Court's decision in *SAS* (138 S. Ct. at 1358), the Board will permit the petitioner, in its reply brief, to address issues discussed in the institution decision. . . . Petitioner may not submit new evidence or argument in reply that it could have presented earlier, e.g. to make out a prima facie case of unpatentability. A party also may submit rebuttal evidence in support of its reply. *See Belden Inc. v. Berk-Tek LLC*, 805 F.3d 1064, 1077–78 (Fed. Cir. 2015). If a party submits a new expert declaration with its reply, the opposing party may cross-examine the expert, move to exclude the declaration, and comment on the declaration and cross-examination in any sur-reply. *Id.* at 1081−82. . . .
>
> Generally, a reply or sur-reply may only respond to arguments raised in the preceding brief. 37 C.F.R. § 42.23, except as noted above. "Respond," in the context of 37 C.F.R. § 42.23(b), does not mean proceed in a new direction with a new approach as compared to the positions taken in a prior filing. While replies and sur-replies can help crystalize issues for decision, a reply or sur-reply that raises a new issue or belatedly presents evidence may not be considered. The Board is not required to attempt to sort proper from improper portions of the reply or sur-reply.
>
> Examples of indications that a new issue has been raised in a reply include new evidence necessary to make out a *prima facie* case for the patentability or unpatentability of an original or proposed substitute claim, such as newly raised rationale to combine the prior art references that was not expressed in the petition. *See Intelligent Bio-Sys., Inc. v. Illumina Cambridge Ltd.*, 821 F.3d 1359, 1369–70 (Fed. Cir. 2016) (holding that the Board did not err in refusing the reply brief as improper under 37 C.F.R. § 42.23(b) because petitioner relied on an entirely new rationale to explain why one of skill in the art would have

> combined the references at issue). It is also improper for a reply to present new evidence (including new expert testimony) that could have been presented in a prior filing, for example newly cited prior art references intended to "gap-fill" by teaching a claim element that was not present in the prior art presented with the petition. *See Genzyme Therapeutic Prods. Ltd. v. Biomarin Pharm. Inc.*, 825 F.3d 1360, 1365–69 (Fed. Cir. 2016) (proper for Board to rely on prior art references submitted with petitioner's reply to establish the state of the art at the time of the invention in response to patent owner arguments).

Patent Trial and Appeal Board Consolidated Trial Practice Guide 73–75 (Nov. 2019), https://www.uspto.gov/TrialPracticeGuideConsolidated (combining the Trial Practice Guide and updates). The Trial Practice Guide further states that:

> In most cases, the Board is capable of identifying new issues or belatedly presented evidence when weighing the evidence at the close of trial, and disregarding any new issues or belatedly presented evidence that exceeds the proper scope of reply or sur-reply. As such, striking the entirety or a portion of a party's brief is an exceptional remedy that the Board expects will be granted rarely.

Id. at 80.

We conclude that Dr. Lowman's testimony and the related discussion in Petitioner's Reply is responsive to arguments made by Patent Owner in its Response and opinions expressed by Dr. Williams in his declaration. Petitioner's Reply addresses issues raised in Patent Owner's Response, such as claim interpretations that would be required by Patent Owner's arguments (*see, e.g.*, PO Resp. 1–2), Dr. Williams's reliance on the prior art (e.g., Herrick's punctal plugs) to explain how intracanalicular plugs have a distinguishing color (*see* PO Resp. 7–8, 38–40), whether Pritchard's silver is a therapeutic agent, whether hydrogels can be colored, why Pritchard

discloses using dexamethasone as a therapeutic agent (*see, e.g.*, PO Resp. 34–35), whether color can be applied to hydrogel (*see, e.g.*, PO Resp. 40–41), why Pritchard and Gillespie were properly combined and what materials Gillespie taught or suggested could be colored (*see* PO Resp. 47–57), and why Hellberg's travoprost anti-glaucoma drug would have been used in Pritchard's punctal plugs (*see* PO Resp. 59–61). *See generally* Pet. Reply. Many of these issues relate to chemistry and pharmaceutical formulations, which is why Dr. Lowman, a chemist, appropriately testifies as an expert witness in rebuttal. There is no requirement of a perfect match between the expert's experience and the relevant field. *SEB*, 594 F.3d at 1373. A person need not be a person of ordinary skill in the art in order to testify as an expert under Rule 702, but rather must be "qualified in the pertinent art." *Sundance*, 550 F.3d at 1363–64.

Dr. Lowman begins his testimony by stating, "this declaration focusses on the testimony of Dr. Williams." Ex. 1052 ¶ 24. Subsequently, essentially every statement made and position taken by Dr. Lowman in his declaration is prefaced by the introduction, "I have been asked to consider Dr. Williams' opinion" on whatever subject is then discussed, followed by the reasons Dr. Lowman disagrees (or agrees) with Dr. Williams and citations to evidence supporting Dr. Lowman's rationale. *See, e.g., id.* at ¶¶ 25, 38, 45, 46, 55, 56, 61, 66, 71, 77, 78, 79, 85, 94, 97, 108. Petitioner's Reply and Dr. Lowman's declaration explain the knowledge a skilled artisan would have already had upon reading Pritchard, Gillespie, and Hellberg as of March 31, 2006, based on the prior art. *See e.g.*, Pet. Reply 8–10; Ex. 1052 ¶¶ 18–23, 45, 50–60, 64, 69, 73, 77, 80–82, 84, 86, 89, 92–93, 95–96, 100, 103, 107–109.

Our reviewing court has held that it is proper for the Board to consider prior art evidence, outside of specific prior art combinations cited for an obviousness challenge, for the purpose of illustrating "the knowledge that skilled artisans would bring to bear in reading the prior art identified as producing obviousness." *Genzyme*, 825 F.3d at 1368. In fact, not considering such evidence may constitute error. *See Ariosa*, 805 F.2d 1359. Moreover, it is proper for a petitioner to address issues in its reply that are first raised by a patent owner in its response; counter arguments need not be preemptively made by a petitioner in its petition. *Idemitsu*, 870 F.3d at 1381.

To the extent any new evidence is cited by Dr. Lowman or submitted by Petitioner, Patent Owner had the opportunity to submit rebuttal evidence in support of its Sur-reply. *See Belden*, 805 F.3d at 1077–78. Further, Patent Owner also had the opportunity to, and did, cross-examine Dr. Lowman at a deposition and addressed Dr. Lowman's declaration and deposition testimony in its Sur-reply. *See* Ex. 2030; PO Sur-reply 3–6, 11–12, 16–19, 21–22, 24, 26–33.

Furthermore, to the extent that any particular argument asserted in the Reply (or discussed in Dr. Lowman's supporting testimony) improperly introduces a new theory or position on patentability, we are capable of distinguishing and disregarding such argument. Similar to a district court in a bench trial, the Board, sitting as a non-jury tribunal with administrative expertise, is well positioned to determine and assign appropriate weight to evidence presented, including not relying on it or giving it no weight when improperly raised in a reply. *See, e.g.*, *Donnelly Garment Co. v. NLRB*, 123 F.2d 215, 224 (8th Cir. 1941) ("One who is capable of ruling accurately

upon the admissibility of evidence is equally capable of sifting it accurately after it has been received . . . ."). As illustrated above in our discussion of Petitioner's challenges and Patent Owner's response to those challenges, we have not relied upon any theories of unpatentability not presented in the Petition and our conclusions on obviousness are based on the evidence cited in the Petition. Thus, in this *inter partes* review, the better course is to have a complete record of the evidence to facilitate public access as well as appellate review.

For the reasons above, we deny Patent Owners' Motion to Strike.

Patent Owner's Motion to Exclude Evidence

Patent Owner filed a Motion to Exclude Evidence. Paper 43 ("PO Mot. Exclude"). Petitioner opposed Patent Owner's Motion to Exclude Evidence. Paper 47 ("Pet. Opp. PO Mot. Exclude"). Patent Owner filed a Reply in support of its Motion to Exclude. Paper 50 ("PO Reply Mot. Exclude").

Patent Owner seeks to exclude the following evidence: Ex. 1011 (Pritchard '132 provisional); Ex. 1013 (Pritchard '858 provisional); Ex. 1014 (Pritchard '569 provisional); Ex. 1028 (Morris); Ex. 1032, (Balaram); Ex. 1035 (PDR re. travoprost); Ex. 1040–1042 (respectively White, Herrick '453, Handbook - re. history of lacrimal plugs); Ex. 1044 (FDA color additives history); Ex. 1045 (PDR); Ex. 1047–1050 (respectively, Lowman, Cayman Chemicals, Nishida, FDA guidance); Ex. 1052 (Lowman Declaration); Ex. 1053 (Lowman CV).

Patent Owner argues that Ex. 1032, Ex. 1035, Ex. 1042, Ex. 1047, and Ex. 1048 are inadmissible hearsay under Fed. R. Evid 801–802 and lack

authentication under Rule 901. The other evidence, Patent Owner argues is untimely, irrelevant or unduly prejudicial under Fed. R. Evid. 401–403.

As an initial matter, we have not relied on Ex. 1013, Ex. 1014, Ex. 1032, Ex. 1035, Ex. 1040, Ex. 1041, Ex. 1042, Ex. 1047, Ex. 1048, Ex. 1049, or Ex. 1050 in our analysis or conclusions on the unpatentability of the claims, as set forth above. Petitioner has met its burden without such evidence. Thus, we dismiss the motion to exclude as moot with respect thereto.

Regarding the other evidence sought to be excluded, we have above addressed Dr. Lowman's declaration and the evidence cited therein, and as cited in the Reply, as not improper. Furthermore, Petitioner's exhibits up to Ex. 1037 were submitted with the Petition, thus they are neither late nor new. We disagree with Patent Owner's position that the evidence is not relevant under Fed. R. Evid. 401 because it relates to materials and to chemistry, as well as to the knowledge of those of ordinary skill in the art relating to the invention of the '082 patent's claims. Furthermore, we also disagree that this evidence is prejudicial under Fed. R. Evid 403, as the Panel is capable of weighing whether any evidence is overly confusing, misleading, or cumulative, for example. Except as proper rebuttal evidence, we have not relied on any evidence submitted by Petitioner, or any theory of unpatentability, not presented in the Petition and discussed in the Dana Declaration.

For the reasons above, we dismiss-in-part and deny-in-part Patent Owner's Motion to Exclude.

B. Petitioner's Motion to Exclude

Petitioner filed a Motion to Exclude certain evidence of record. Paper 44 ("Pet. Mot. Exclude"). Patent Owner opposed this motion. Paper 45 ("PO Opp. Pet. Mot. Exclude). Petitioner filed a Reply in support of its Motion to Exclude. Paper 51 ("Pet. Reply Mot. Exclude").

Petitioner seeks to exclude the declaration of Dr. Williams (Ex. 2014) because it is not relevant and not reliable, because Dr. Williams does not offer his own opinions, but merely adopts Patent Owner's positions, and because Dr. Williams misunderstood the person of ordinary skill in the art standard and failed to carefully review Pritchard. Pet. Mot. Exclude, 1.

Dr. Williams's testimony is relevant because it is directed to the issues of patentability set forth in the Petition. *See generally* Ex. 2014. Petitioner's further objections go to the weight that should be accorded the testimony, not its admissibility. The Board has broad discretion to assign weight to be accorded expert testimony. *Yorkey v. Diab*, 601 F.3d 1279, 1284 (Fed. Cir. 2010). Petitioner's objections do not support excluding the evidence.

For the reasons above, we deny Petitioner's Motion to Exclude.

V. Conclusion

Petitioner has demonstrated by a preponderance of the evidence that claims 1–23 of the '082 patent would have been obvious (1) over Pritchard and Gillespie, and (2) over Pritchard, Gillespie, and Hellberg.

In summary, on Petitioner's unpatentability challenges:[17]

---

[17] Should Patent Owner wish to pursue amendment of the challenged claims in a reissue or reexamination proceeding subsequent to the issuance of this decision, see the April 2019 *Notice Regarding Options for Amendments by*

Claims	35 U.S.C. §	References	Claims Shown Unpatentable	Claims Not shown Unpatentable
1–7, 9–16, 18–20, 22, 23	102	Pritchard		1–7, 9–16, 18–20, 22, 23
1–7, 9–16, 18–20, 22, 23	103(a)	Pritchard, Gillespie	1–7, 9–16, 18–20, 22, 23	
8, 17, 21	103(a)	Pritchard, Gillespie, Hellberg	8, 17, 21	
1–7, 9–16, 18–20, 22, 23	103(a)	Pritchard, Handbook		1–7, 9–16, 18–20, 22, 23
8, 17, 21	103(a)	Pritchard, Handbook, Hellberg		8, 17, 21
Overall Outcome			1–23	

ORDER

Accordingly, it is hereby:

ORDERED that Petitioner has demonstrated by a preponderance of the evidence that claims 1–23 of the ’082 patent are *unpatentable*;

FURTHER ORDERED that, because this is a Final Written Decision, any party to the proceeding seeking judicial review of the decision must comply with the notice and service requirements of 37 C.F.R. § 90.2; and

---

Patent Owner Through Reissue or Reexamination During a Pending AIA Trial Proceeding. *See* 84 Fed. Reg. 16654 (Apr. 22, 2019). If Patent Owner chooses to file a reissue application or a request for reexamination of the challenged patent, Patent Owner has a continuing obligation to notify the Board in updated mandatory notices. *See* 37 C.F.R. § 42.8(a)(3), (b)(2).

FURTHER ORDERED that Patent Owner's Motion to Strike is *denied*;

FURTHER ORDERED that Patent Owner's Motion to Exclude is *dismissed-in-part* and *denied-in-part*; and

FUTHER ORDERED that Petitioner's Motion to Exclude is *denied*.

For PETITIONER:

Kia Freeman
Brian M. Seeve
Thomas Foley
McCARTER & ENGLISH, LLP
kfreeman@mccarter.com
brian.seeve@wilmerhale.com
tfoley@mccarter.com

For PATENT OWNER:

Anita Varma
David Tennant
Grace Wang
Yang Xu
WHITE & CASE LLP
anita.varma@whitecase.com
dtennant@whitecase.com
grace.wang@whitecase.com
yang.xu@whitecase.com