Trials@uspto.gov
571-272-7822

Paper 51
Date: July 14, 2020

UNITED STATES PATENT AND TRADEMARK OFFICE

BEFORE THE PATENT TRIAL AND APPEAL BOARD

QIAGEN NORTH AMERICAN HOLDINGS, INC.,
Petitioner,

v.

HANDYLAB, INC.,
Patent Owner.

IPR2019-00490[1]
Patent 8,323,900 B2

Before JO-ANNE M. KOKOSKI, CHRISTOPHER G. PAULRAJ, and JULIA HEANEY, *Administrative Patent Judges.*

HEANEY, *Administrative Patent Judge*.

JUDGMENT
Final Written Decision
Determining No Challenged Claims Unpatentable
35 U.S.C. § 318(a)

---

[1] IPR2019-01494 has been joined with this proceeding.

I. INTRODUCTION

We have jurisdiction to conduct this *inter partes* review under 35 U.S.C. § 6, and this Final Written Decision is issued pursuant to 35 U.S.C. § 318(a). For the reasons that follow, we determine that QIAGEN North American Holdings, Inc. ("Petitioner") has not shown by a preponderance of the evidence that claims 1–22 of U.S. Patent No. 8,323,900 B2 ("the '900 patent," Ex. 1003) are unpatentable.

A. Procedural History

Petitioner filed a Petition ("Pet.") to institute an *inter partes* review of claims 1–22 of the '900 patent. Paper 1. HandyLab, Inc. ("Patent Owner") filed a Preliminary Response. Paper 5. Pursuant to 35 U.S.C. § 314(a), we instituted an *inter partes* review of claims 1–22 on all grounds advanced in the Petition. Paper 8 ("Dec. on Inst." or "Institution Decision"), 7, 20.

After institution of trial, Patent Owner filed a Patent Owner Response ("PO Resp.," Paper 24), Petitioner filed a Reply ("Pet. Reply," Paper 31), and Patent Owner filed a Sur-Reply ("PO Sur-Reply," Paper 42).

Patent Owner filed a Motion to Strike certain portions of Petitioner's Reply. Paper 37. Petitioner filed an Opposition. Paper 38. We denied Patent Owner's Motion to Strike. Paper 41. Patent Owner also filed a Motion to Exclude Exhibits 1030 and 1032. Paper 43. Petitioner filed an Opposition (Paper 45), and Patent Owner filed a Reply (Paper 46).

An oral hearing was held on April 21, 2020, and a transcript is included in the record. Paper 50 ("Tr.").

B. Related Proceedings

Petitioner indicates that there are no related matters. Pet. 3. Patent Owner identifies QIAGEN North American Holdings, Inc. v. HandyLab,

Inc., Case IPR2019-00488, which concerns U.S. Patent No. 7,998,708 ("the '708 patent"), as a related matter. Paper 3, 1.[2]

C. The '900 Patent

The '900 patent, titled "Microfluidic System for Amplifying and Detecting Polynucleotides in Parallel," is directed to "a system and related methods for amplifying, and carrying out diagnostic analyses on, polynucleotides (e.g., a DNA, RNA, mRNA, or rRNA) from biological samples." Ex. 1003, code (54), 4:4–7. The claimed system "includes a disposable microfluidic cartridge containing multiple sample lanes in parallel and a reusable instrument platform (a PCR analyzer apparatus) that can actuate on-cartridge operations" and "can detect (e.g., by fluorescence detection) and analyze the products of the PCR amplification in each of the lanes separately, in all simultaneously, or in groups simultaneously." *Id.* at 4:14–20. The system optionally "can display the results on a graphical user interface." *Id.* at 4:20–21.

[2] Petitioner indicates that the '900 patent issued from the same application as the '708 patent. Pet. 7.

The '900 patent's Figure 1 is reproduced below.

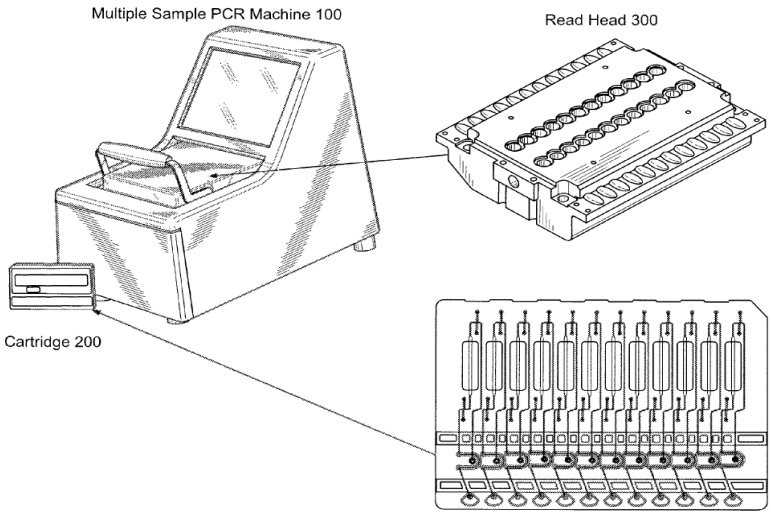

FIG. 1

Figure 1 is "a perspective view of an exemplary apparatus 100" described by the '900 patent. *Id.* at 4:33–34. Apparatus 100 includes read head 300 "that contains detection apparatus for reading signals from cartridge 200." *Id.* at 4:42–43. Apparatus 100 "is able to carry out real-time PCR on a number of samples in cartridge 200 simultaneously." *Id.* at 4:43–45. Cartridge 200 contains multiple sample lanes, and the '900 patent explains that "[p]referably the number of samples is 12 samples, as illustrated with exemplary cartridge 200," although other numbers of samples can be present. *Id.* at 4:40–41, 4:45–46.

The '900 patent's Figure 3 is reproduced below.

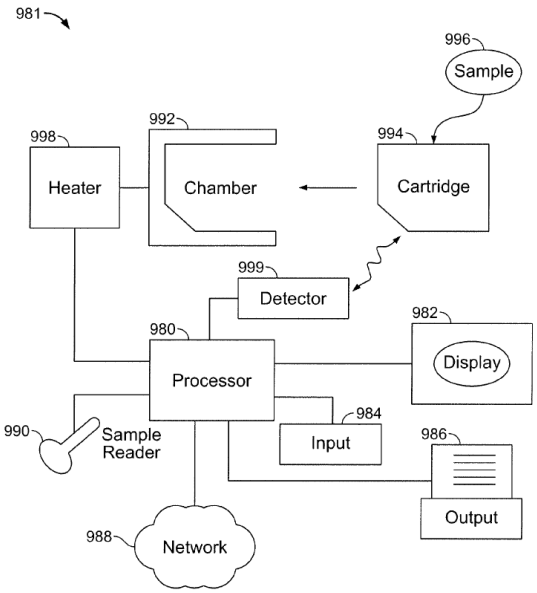

FIG. 3

Figure 3 is a "schematic overview of a system 981 for carrying out the analyses described" in the '900 patent. *Id.* at 4:59–62. Processor 980 "is configured to control functions of various components of the system," such as receiving data about a sample to be analyzed from sample reader 990, "which may be a barcode reader, an optical character reader, or an RFID scanner (radio frequency tag reader)." *Id.* at 4:64–5:3. Processor 980 can also be configured to accept user instructions from input 984, to communicate with optional display 982, to transmit analysis results to an output device, and to control various aspects of sample diagnostics. *Id.* at 5:5–19, 6:6–7.

System 981 "is configured to operate in conjunction with a complementary cartridge 994, such as a microfluidic cartridge." *Id.* at 6:8–10. Cartridge 994 is itself configured "to receive one or more samples 996 containing one or more polynucleotides in a form suitable for amplification and diagnostic analysis," and "has dedicated regions within which

amplification, such as by PCR, of the polynucleotides is carried out when the cartridge is situated in the apparatus." *Id.* at 6:12–17. Receiving bay 992 is "configured to selectively receive the cartridge," and "is in communication with a heater unit 998 that itself is controlled by processor 980 in such a way that specific regions of the cartridge, such as individual sample lanes, are independently and selectively heated at specific times during amplification and analysis." *Id.* at 6:18–19, 6:39–43.

Processor 980 "is also configured to receive signals from and control a detector 999 configured to detect a polynucleotide in a sample in one or more of the individual sample lanes, separately or simultaneously." *Id.* at 7:36–39. Detector 999 can be "an optical detector that includes a light source that selectively emits light in an absorption band of a fluorescent dye, and a light detector that selectively detects light in an emission band of the fluorescent dye, wherein the fluorescent dye corresponds to a fluorescent polynucleotide probe." *Id.* at 7:45–50.

The '900 patent explains that system 981 "is configured so that a cartridge with capacity to receive multiple samples can be acted upon by the system to analyze multiple samples—or subsets thereof—simultaneously, or to analyze the samples consecutively." *Id.* at 8:1–4. According to the '900 patent, this system is self-contained and therefore "is advantageous at least because it does not require locations within the system suitably configured for storage of reagents," and does not "require inlet or outlet ports that are configured to receive reagents from, e.g., externally stored containers such as bottles, canisters, or reservoirs." *Id.* at 8:9–15.

D. Challenged Claims

Petitioner challenges claims 1–22 ("the challenged claims") of the '900 patent. Claims 1, 7, and 20 are independent. Claim 1 is representative and is reproduced below.

> 1. An apparatus, comprising:
>
> a plurality of multi-lane microfluidic cartridges, each lane comprising a PCR reaction zone;
>
> a plurality of receiving bays, each receiving bay configured to receive one of the plurality of the microfluidic cartridges;
>
> each PCR reaction zone comprising a separately controllable heat source thermally coupled thereto, wherein the heat source thermal cycles the PCR reaction zone to carry out PCR on a polynucleotide-containing sample in the PCR reaction zone and maintains a substantially uniform temperature throughout the PCR reaction zone during each cycle;
>
> a detector configured to detect the presence of an amplification product in one or more PCR reaction zones; and
>
> a processor coupled to the detector and the heat sources, configured to control heating of one or more PCR reaction zones by the heat sources.

Ex. 1003, 46:4–20.

E. Prior Art and Asserted Grounds

Petitioner challenges the patentability of claims 1–22 of the '900 patent on the following grounds:

Claim(s) Challenged	35 U.S.C. §[3]	Reference(s)/Basis
1–8, 12, 14, 15, 17, 19–22	103(a)	Zou I[4] and McNeely[5] or Pourahmadi[6]
9–11, 13	103(a)	Zou I, McNeely or Pourahmadi, and Zou II[7]
18	103(a)	Zou I, McNeely, or Pourahmadi, and Chow[8]
16	103(a)	Zou I, McNeely, or Pourahmadi, and Duong[9]

Petitioner relies on the Declaration of Bruce K. Gale, Ph.D. ("Gale Declaration," Ex. 1001) and the second Declaration of Bruce K. Gale, Ph.D. ("Second Gale Declaration," Ex. 1026) in support of its contentions. Patent Owner relies on the Declaration of Allen Northrup, Ph.D. ("Northrup Declaration," Ex. 2036).

II. ANALYSIS

A. Level of Ordinary Skill in the Art

Petitioner contends that a person having ordinary skill in the art ("POSA") would have had "a degree in Mechanical Engineering, Bioengineering, or a similar field, and three years of experience with microfluidic devices or systems relating to biochemical reactions/analysis,

---

[3] The Leahy-Smith America Invents Act ("AIA") included revisions to 35 U.S.C. § 103 that became effective on March 16, 2013. Because the '900 patent issued from an application filed before March 16, 2013, we apply the pre-AIA versions of the statutory bases for unpatentability.
[4] U.S. Patent No. 6,509,186 B1, issued Jan. 21, 2003 (Ex. 1008).
[5] U.S. Patent App. Pub. No. US 2004/0037739 A1, published Feb. 26, 2004 (Ex. 1009).
[6] U.S. Patent App. Pub. No. US 2002/0055167 A1, published May 9, 2002 (Ex. 1015).
[7] U.S. Patent No. 6,762,049 B2, issued July 13, 2004 (Ex. 1011).
[8] U.S. Patent No. 5,955,028, issued Sept. 21, 1999 (Ex. 1014).
[9] WO 01/54813 A2, published Aug. 2, 2001 (Ex. 1013).

such as PCR," or "an advanced degree in a similar field with at least one year of related experience." Pet. 7. Patent Owner argues that Petitioner's proposed definition "is not narrowly drawn to experience in 'microfluidic systems that carry out PCR,'" and contends that a POSA "would have had a degree in Mechanical Engineering, Bioengineering, or a similar field, and three years of experience with microfluidic devices that carry out PCR, or would have an advanced degree in a similar field with at least one year of related experience." PO Resp. 8 (citing Ex. 2036 ¶¶ 25–26). Patent Owner's declarant Dr. Northrup states that, although he disagrees with Petitioner's proposed definition of a POSA, his "opinions would not change under" that definition. Ex. 2036 ¶ 28.

We agree with the parties that a POSA would have had an engineering background and experience with microfluidic devices, which is consistent with the level of ordinary skill in the art at the time of the invention as reflected in the prior art in this proceeding. *See Okajima v. Bourdeau*, 261 F.3d 1350, 1355 (Fed. Cir. 2001) (explaining that specific findings regarding ordinary skill level are not required "where the prior art itself reflects an appropriate level and a need for testimony is not shown" (quoting *Litton Indus. Prods., Inc. v. Solid State Sys. Corp.*, 755 F.2d 158, 163 (Fed. Cir. 1985))). Our determination regarding the patentability of the challenged claims does not turn on the differences between Petitioner's and Patent Owner's definitions, and we note that our conclusions would be the same under either assessment.

B. Claim Construction

For petitions such as this one, filed after November 13, 2018, we apply the same claim construction standard "used in the federal courts, in other words, the claim construction standard that would be used to construe

the claim in a civil action under 35 U.S.C. [§] 282(b), which is articulated in" *Phillips v. AWH Corp.*, 415 F.3d 1303 (Fed. Cir. 2005) (en banc). 83 Fed. Reg. 51,340, 51,343 (Oct. 11, 2018) (now codified at 37 C.F.R. § 42.100(b) (2019)). Under the *Phillips* standard, the "words of a claim 'are generally given their ordinary and customary meaning,'" which is "the meaning that the term would have to a person of ordinary skill in the art in question at the time of the invention, i.e., as of the effective filing date of the patent application." *Phillips*, 415 F.3d at 1312–13. Only those terms in controversy need to be construed, and only to the extent necessary to resolve the controversy. *See Nidec Motor Corp. v. Zhongshan Broad Ocean Motor Co.*, 868 F.3d 1013, 1017 (Fed. Cir. 2017) ("[W]e need only construe terms 'that are in controversy, and only to the extent necessary to resolve the controversy.'") (quoting *Vivid Techs., Inc. v. Am. Sci. & Eng'g, Inc.*, 200 F.3d 795, 803 (Fed. Cir. 1999)).

1. "multi-lane microfluidic cartridges"

Patent Owner argues that "multi-lane microfluidic cartridges" should be construed to mean "microfluidic cartridges each comprising a plurality of sample lanes with separate sample inlets and microfluidic networks." PO Resp. 10 (citing Ex. 2036 ¶ 51). Patent Owner argues that "the specification makes clear that the claims '***multi***-lane microfluidic cartridge' has a plurality of samples lanes," and "defines that in the context of the '900 patented invention, a 'sample lane' or 'lane' has certain specific characteristics," such as (1) a sample inlet and (2) certain microfluidic components. *Id.* at 10–11 (citing Ex. 1003, 13:4–20, 39–47; Ex. 2036 ¶¶ 53–54). Patent Owner further argues that the specification states that the sample inlet and the microfluidic network are separate from one another and unique to each lane. *Id.* at 11 (citing Ex. 1003, 13:2–3, 13:39–41, 15:4–7). According to Patent Owner,

the disclosures in the specification "confirm the basic design of the '900 patented invention: the disclosed cartridge has ***separate*** sample lanes that can process multiple ***different*** samples independently." *Id.* at 12 (citing Ex. 1003, 13:26–28, 13:38–42).

Petitioner argues that the claims "do not recite a 'sample inlet' associated with each lane, much less a '*separate* sample inlet,'" or a "sample lane." Pet. Reply 2–3.[10] Petitioner argues that Patent Owner improperly imports the specification's description of a "sample lane" into the claim term "lane" in order to impose the additional requirement of a sample inlet associated with each lane, which is contrary to the claim language which requires only that each "lane" must include a PCR reaction zone. *Id.* Petitioner further argues that "multi-lane microfluidic cartridge" should be given its ordinary meaning, i.e., "a cartridge with multiple microfluidic channels," and "should not be limited to the embodiments in the specification" because "the specification confirms that the disclosed cartridges are only 'exemplary' and that the purported invention includes '[o]ther configurations of inlets though not explicitly described or depicted.'" *Id.* at 3 (citing Ex. 1003, 2:59–60, 13:26–28, 17:22–26, 18:2–4).

We have considered, but are not persuaded by Petitioner's claim construction arguments for "multi-lane microfluidic cartridges." The claim language requires that "each lane" of the multi-lane microfluidic cartridge comprises a separately controllable PCR reaction zone. While this much is apparent from the plain language of the claims, the issue is what constitutes a "lane." For guidance, we turn to the specification. *See Phillips*, 415 F.3d

[10] Petitioner's Reply does not have numbered pages. In this decision, we refer to page numbers of Petitioner's Reply starting from the page titled "Introduction" as page one.

at 1315 (the specification is "the single best guide to the meaning of a disputed term") (citing *Vitronics Corp. v. Conceptronic, Inc.*, 90 F.3d 1576, 1582 (Fed. Cir. 1996).

We agree with Patent Owner that the specification defines the structure of the sample lane. PO Resp. 12. The specification states:

> A sample lane is an independently controllable set of elements by which a sample can be analyzed, according to methods described herein as well as others known in the art. A sample lane comprises at least a sample inlet, and a microfluidic network having one or more microfluidic components as further described herein.

Ex. 1003, 13:4–9. The embodiments described in the specification include sample inlets associated with each of the sample lanes. *See, e.g., id.* at 14:41–52, Figs. 10A, 10B (describing an exemplary microfluidic cartridge depicted in Figures 10A and 10B as showing "[m]ore than one inlet 202 . . . wherein one inlet operates in conjunction with a single sample lane"), 17:60–64, Fig. 13 (describing and depicting a 48-sample cartridge with separate inlets 602 for each sample lane). In contrast, when describing other elements (such as inlet ports and valves) that may be included in a sample lane, the specification clearly conveys that these other elements are optional. *Id.* at 13:10–13 ("In various embodiments, a sample lane *can include* a sample inlet port or valve, and a microfluidic network that comprises, in fluidic communication one or more components selected from the group consisting of" specified valves, vents, pumps, and chambers. (emphasis added)).

That each sample lane must be associated with a separate, dedicated inlet is further supported by the '900 patent specification's teaching that

> [a] multi-lane cartridge is configured to accept a number of samples in series or in parallel, simultaneously or consecutively, in particular in embodiments [of] 12 samples, wherein the samples include at least a first sample and a second sample, wherein the first sample and the second sample each contain one or more polynucleotides in a form suitable for amplification. The polynucleotides in question may be the same as, or different from one another, in different samples and hence in different lanes of the cartridge.

Ex. 1003, 13:26–34; *see also id.* at 13:43–47 ("[T]he first microfluidic network is configured to amplify polynucleotides in the first sample, and . . . the second microfluidic network is configured to amplify polynucleotides in the second sample."). The '900 patent specification further teaches that the "sample inlets of adjacent lanes are reasonably spaced apart from one another to prevent any contamination of one sample inlet from another sample when a user introduces a sample into any cartridge," and describes an embodiment where "the sample inlets are configured so as to prevent inadvertent introduction of sample into a given lane after sample has already been introduced into that lane." *Id.* at 15:4–10.

Taken as a whole, these disclosures indicate that the multi-lane microfluidic cartridge claimed in the '900 patent is capable of analyzing a distinct sample in each lane, such that multiple different samples can be processed in the cartridge at the same time. This is achieved by associating a separate sample inlet with each sample lane.

We are not persuaded by Petitioner's argument that a "lane" in the '900 patent specification is something different from a "sample lane." *See* Pet. Reply 2–3. The specification uses the terms "lane" and "sample lane" interchangeably, e.g., "[o]ne aspect of the present technology relates to a microfluidic cartridge having two or more *sample lanes* arranged so that

analyses can be carried out in two or more of *the lanes* in parallel, for example simultaneously, and wherein each lane is independently associated with a given sample." Ex. 1003, 12:66–13:3 (emphasis added); *see also id.* at 4:14–19 (describing the apparatus as including "a disposable microfluidic cartridge containing multiple sample lanes in parallel" with an instrument platform that can analyze the PCR amplification products "in each lane" separately or simultaneously), 13:39–42 ("The multi-lane cartridge comprises at least a first sample lane having a first microfluidic network and a second lane having a second microfluidic network . . ."), 13:61–63 (describing a microfluidic cartridge containing "twelve independent sample lanes" in which "each lane" is configured to carry out amplification). Petitioner does not direct us to, nor do we discern, anything in the specification that indicates that a "lane" is something different than a "sample lane." *See Phillips*, 415 F.3d at 1313 ("[T]he person of ordinary skill in the art is deemed to read the claim term not only in the context of the particular claim in which the disputed term appears, but in the context of the entire patent, including the specification.").

Moreover, we are not persuaded to adopt Petitioner's proposed construction, i.e., "a cartridge with multiple microfluidic channels," because it refers to "channels" in a different sense than the term is used in the '900 patent. In the '900 patent specification the terms "channel" and "sample lane" or "lane" are not used interchangeably, and instead refer to separate structures. *See* PO Sur-Reply 3. In particular, the '900 patent specification describes channels as elements of a microfluidic network, which in turn is an element of the sample lane. *See* Ex. 1003, 18:59–61 ("Channels of a microfluidic network in a lane of [a] cartridge typically have at least one sub-millimeter cross-sectional dimension."); *see also id.* at 14:55–59 ("Also

shown [in Figs. 10A and 10B] is an ultrafast PCR reactor 210, which, as further described herein, is a microfluidic channel in a given sample lane that is long enough to permit PCR to amplify polynucleotides present in a sample.”).

Finally, Petitioner’s argument that Patent Owner equated “lane” and “flow channel” to overcome prior art during prosecution of the ’708 patent is not persuasive. *See* Pet. Reply 4 (citing Ex. 1005, 7–8; Ex. 1026 ¶ 21). Petitioner directs us to an amendment in which the applicants added the phrase “multi-lane” to modify “microfluidic cartridge” in the pending claims in response to a rejection over the Wilding reference. Ex. 1005, 2–5. In that amendment, the applicants argued:

> The amplification device disclosed in Wilding is a single lane (flow channel) amplification device for conducting PCR. *See, e.g., Wilding*, paragraph [0039] and Figures 2 and 5. Thus, Wilding fails to disclose a “multi-lane microfluidic cartridge, each lane comprising a PCR reaction zone” as required by Claim 1. Furthermore, Wilding teaches a PCR reaction chamber with multiple sections, and if the two chambers are interpreted to be the same reaction zone, the device fails to satisfy the claim limitations that “the heat source maintains substantially uniform temperature throughout the PCR reaction zone” and that it “thermal cycles the PCR reaction zone.”

Id. at 7.

The Federal Circuit has cautioned that “prosecution history comments cannot trump the plain language of the claims and the direct teaching of the specification.” *Telecordia Techs., Inc. v. Cisco Sys., Inc.*, 612 F.3d 1365, 1375 (Fed. Cir. 2010) (citation omitted). As set forth above, the specification uses “lane” and “channel” to refer to different structures. In the prosecution history relied upon by Petitioner, the applicants appear to use the phrase “single lane (flow channel)” only to characterize the device

used in Wilding. This is consistent with Patent Owner's representation that the applicants were "simply using the terminology that Wilding itself uses ('flow channel') as short-hand for discussing the relevant features of the Wilding reference." PO Sur-Reply 3–4.[11] Further, the applicants did not distinguish Wilding on the basis that a lane and a flow channel are actually the same structures, but instead only argued that the *number* of such lanes or flow channels in the Wilding device did not satisfy the claim requirement of a "multi-lane microfluidic cartridge.". Accordingly, we find that the applicants' remarks regarding Wilding are insufficient to overcome the direct teaching of the '900 patent, namely, that a "lane" and a "channel" are different structures.

In view of the foregoing, we construe the term "multi-lane microfluidic cartridges" to mean "microfluidic cartridges each comprising a plurality of sample lanes with separate sample inlets and microfluidic networks." The express language of the claims further requires that each lane also comprise a PCR reaction zone. Ex. 1003, 46:5–6 ("a plurality of multi-lane microfluidic cartridges, each lane comprising a PCR reaction zone").

C. Obviousness over Zou I and McNeely or Pourahmadi

Petitioner contends that the combined teachings of Zou I and Pourahmadi teach or suggest each limitation of claims 1–8, 12, 14, 15, 17, and 19–22. Pet. 33–65.

[11] A complete copy of the prosecution history, including Wilding, is not of record in this proceeding.

1. Overview of Zou I (Ex. 1008)

Zou I is directed to "a thermal cycler which permits simultaneous treatment of multiple individual samples in independent thermal protocols, so as to implement large numbers of DNA experiments simultaneously in a short time." Ex. 1008, at [57]. Zou I explains that "[t]he basic principle that governs the present invention is that the thermally conductive cycler chamber is thermally isolated from its surroundings except for one or more heat transfer members through which all heat that flows in and out of the chamber passes," and "by placing at least one heating element in each transfer area, heat lost from the chamber can be continuously and precisely replaced, as needed." *Id.* at 3:55–62. Zou I teaches that "[t]his is achieved by placing, within each chamber, at least one temperature sensor per heating element and locating this sensor close to the heating elements," and, further, that the chamber can be rapidly cooled "by connecting the heat transfer areas to a heat sink through a high thermal conductance path." *Id.* at 3:62–67.

Figure 1a of Zou I is reproduced below.

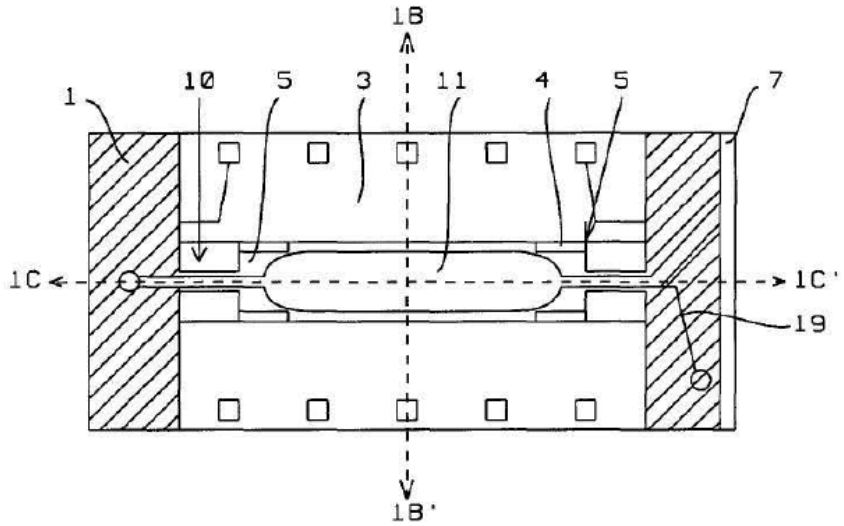

FIG. 1A

Figure 1a is a plan view of a first embodiment of the invention described in Zou I. *Id.* at 3:14–15. Chamber 11 is connected at both ends to silicon frame 1 through monocrystalline silicon beams 10, with heaters 5 at each end inside the heat transfer areas. *Id.* at 4:19–22. Each chamber also contains at least one heat temperature sensor 4 for each heating element 5. *Id.* at 4:24–27. Fluid bearing channels dispense fluid into and remove fluid from chamber 11 through silicon beams 10. *Id.* at 4:28–30. Unprocessed fluid is stored in common reservoir 7, and then directed to chamber 11 through fluid bearing channel 31. *Id.* at 4:31–33. Chamber 11 is sandwiched between glass plate 2 and silicon membrane 12 (shown in Figure 1c), which keeps the chamber volume below 100 microliters and minimizes thermal capacitance of the chamber. *Id.* at 5:14–20.

Figure 4 of Zou I is reproduced below.

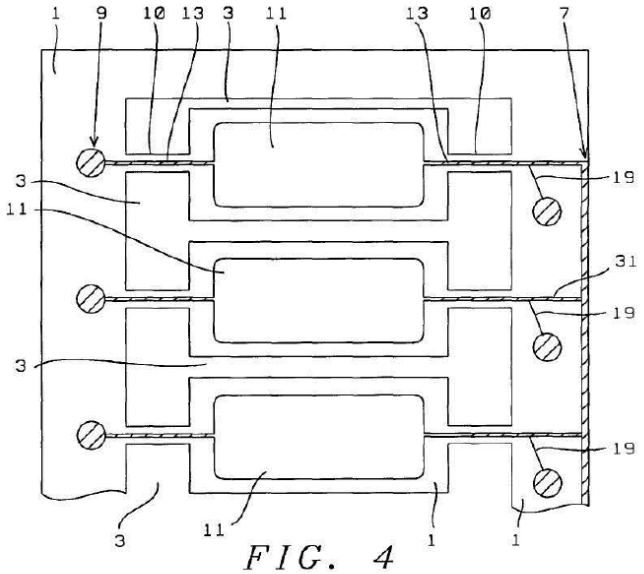

FIG. 4

Figure 4 depicts "an example of several chambers integrated to form a single multi-sample recycling unit." *Id.* at 5:4–6. Individual chambers 11 are positioned inside the interior open area of silicon frame 1 and are connected

to it through silicon beams 10, and, "except for these beams, the chamber is always thermally isolated from the frame by open space 3." *Id.* at 5:6–11.

2. Overview of Pourahmadi (Ex. 1015)

Pourahmadi describes an instrument with multiple microfluidic cartridges for performing various operations, such as PCR, on a fluid sample. Ex. 1015 ¶¶ 21, 43, 48. Pourahmadi teaches that the instrument may include a processor for controlling the operation of each cartridge, and that the processor is connected to various sensors in the cartridge, such as temperature sensors. *Id.* ¶ 64. The processor is programmed to receive and record temperature data, and provides thermal control of the sample to achieve the desired temperature for a particular stage of reaction. *Id.* ¶¶ 125, 129. Alternatively, thermal control may be achieved by transferring the sample among different reaction regions having different, constant temperatures. *Id.* ¶ 125. The processor "will typically include programming for instructing the delivery of appropriate current for raising and lowering the temperature" of cartridge regions in order to carry out "predetermined time/temperature profiles, e.g., thermal cycling for PCR, and the like." *Id.* ¶ 129. Pourahmadi further teaches:

> In addition to sensors for monitoring temperature, the cartridge may contain sensors to monitor the progress of one or more of the operations of the device. For example, optical sensors and pressure sensors may be incorporated into one or more regions to monitor the progress of the various reactions, or within flow channels to monitor the progress of fluids or detect characteristics of the fluids ….

Id. ¶ 130.

Figure 2 of Pourahmadi is reproduced below.

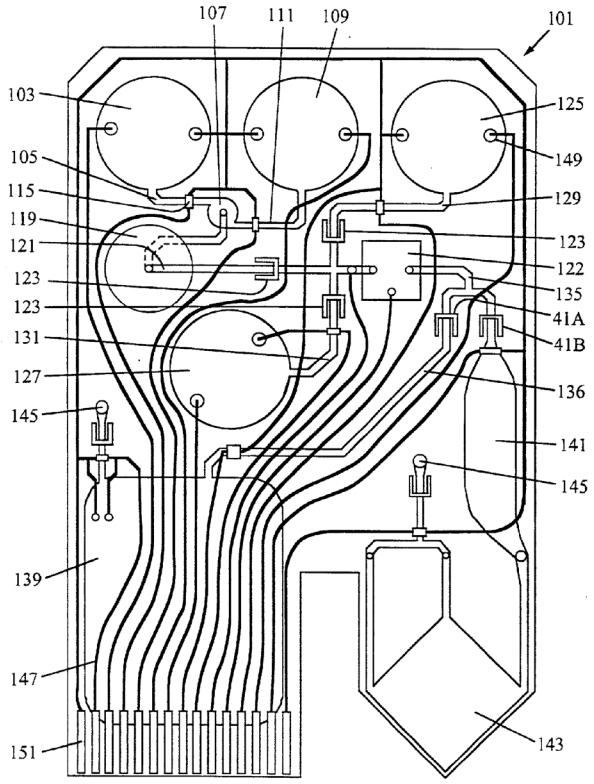

FIG. 2

Figure 2 depicts an example of a cartridge according to an embodiment of Pourahmadi. *Id.* ¶ 48. The cartridge is designed to process a fluid sample and amplify nucleic acids, such as by PCR, and includes a sample flow path extending from inlet port 103 through reagent mixing chamber 107 and lysing chamber 119. *Id.* ¶¶ 48–49. The sample flow path also includes flow-through component 122 which Pourahmadi describes as a microfabricated chip comprising an array of columns for capturing analyte as the sample flows through the chip. *Id.* ¶ 50. Following capture in the flow-through component, the analyte is released into elution fluid that flows through reagent chamber 141 which contains PCR reagents, and then flows into reaction chamber 143 for PCR amplification. *Id.* ¶¶ 53–54.

3. Overview of McNeely (Ex. 1009)

McNeely is directed to an interface device to provide for controlled delivery of fluids to selected regions of microarray slides used in a detection reaction, and an instrument for simultaneous processing of the microarray slides. Ex. 1009 ¶ 2. McNeely teaches that its interface device "can be connected to a substrate bearing a microarray of spots made up of DNA, RNA, oligonucleotides, proteins, or other biomolecules" and "provides for the delivery of sample, reagents, rinses, and so forth, to selected portions of the array in a controlled manner." *Id.* ¶ 17.

McNeely's instrument is shown in Figure 1, reproduced below.

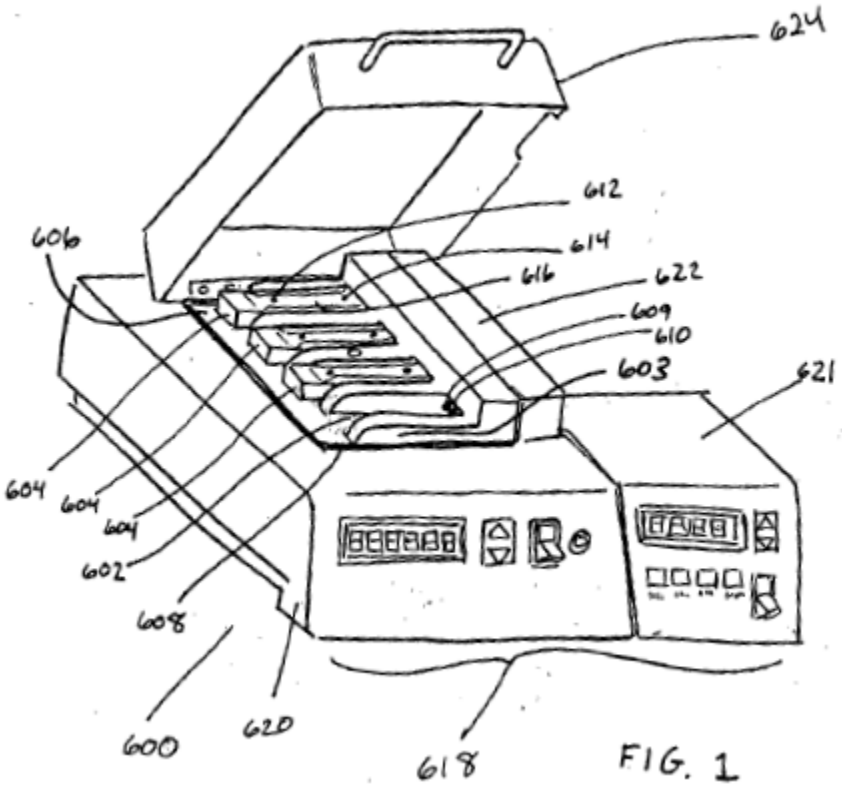

Figure 1 illustrates reaction devices 604 received by bays 602 in instrument 600. Ex. 1009 ¶ 82. The instrument includes multiple bays that are each adapted to receive a reaction device, which is a combination of a microarray slide and microarray interface device. *Id.* McNeely describes "[o]ne of the

advantages of the inventive system is that it can be configured for use in processing a single slide, or it can be multiplexed to handle the processing of multiple slides." *Id.* ¶ 139.

McNeely further describes each interface device with reference to Figures 5 and 6 below.

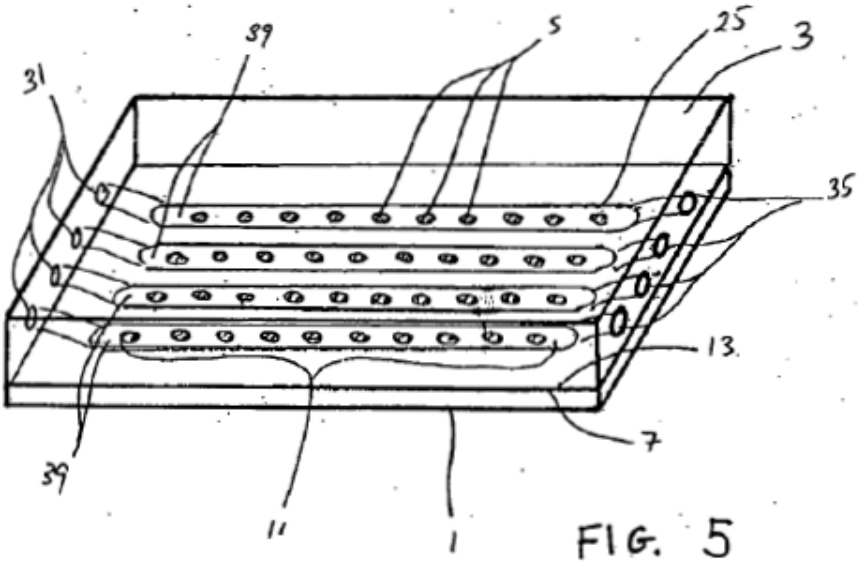

FIG. 5

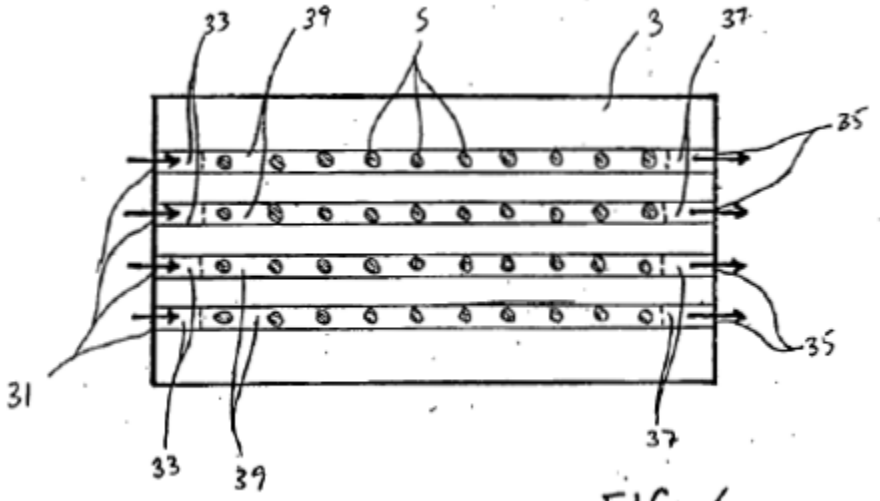

FIG. 6

Figure 5, shown above, is a perspective view of interface device 3; Figure 6, shown above, is a top view of the interface device. *Id.* ¶¶ 39–40. In the interface device, closed interface channels 39 are formed when interface surface 13 is pressed against surface 7 of microarray slide 1 and grooves 25

are closed or covered by surface 7. *Id.* ¶ 95. Fluid samples may enter the interface channels through interface inlets 31, travel over columns of spots 5, and exit through outlets 35. *Id.* ¶ 96. McNeely teaches that the embodiment shown in Figures 5 and 6 "permits column 11 of spots 5 to be accessed individually," and "[c]ontinuous flow of samples, reagents, and other reactants may be provided to each column of spots." *Id.* ¶ 97. "Inlet channels 33 and outlet channels 37 may be closed channels formed in the interior of interface device 3," and "[i]t would also be possible to form inlet channels 33 and outlet channels 37 as open grooves in interface surface 13 of interface device 3, continuous with grooves 25, which would similarly form closed channels when interface device 3 was sealed to microarray slide 1." *Id.* McNeely further teaches that the interface device may include various types of sensors, including "optical sensors for real time detection of reactions occurring in the interface device." *Id.* ¶ 138. The interface device may also include "heating elements or other elements for regulating reaction conditions," and that such "heating elements may be used to perform thermo-cycling during PCR." *Id.*

4. Analysis of Claims 1–8, 12, 14, 15, 17, and 19–22

Petitioner contends that Zou I teaches a multi-lane microfluidic unit that includes most of the elements of the challenged claims, and that "[t]he remaining elements, such as a detector, a processor coupled to the detector, multiple microfluidic cartridges, and a plurality of receiving bays each configured to receive one of the cartridges, were standard features of integrated machines used for performing biochemical reactions such as PCR." Pet. 26 (citing Ex. 1001 ¶¶ 116, 313–315, 319–321), 33 (citing Ex. 1008, 2:50-60, 5:4-20, Figs. 4, 5, 16; Ex. 1001 ¶ 333.) Petitioner contends that "such integrated machines with multiple cartridges were common by

March of 2006" and that McNeely and Pourahmadi disclose two such machines. *Id.* at 26. Petitioner also contends that a person of ordinary skill in the art would have been motivated to combine Zou I's unit with a conventional integrated machine such as in Pourahmadi or McNeely, with a reasonable expectation of success. Pet. 27–32.

Patent Owner argues in response that Zou I does not disclose a multi-lane microfluidic unit with each lane comprising a PCR reaction zone. PO Resp. 29–32. Patent Owner also argues that Petitioner fails to show a motivation to combine the references to teach or suggest cartridges, receiving bays, or a detector configured to detect the presence of an amplification product in one or more respective PCR reaction zones as recited in claim 1, and that Petitioner does not explain "why or how the teachings [of the prior art] would have or could have been successfully combined." *Id.* at 39–51. We address these arguments in turn below.

a) "a plurality of multi-lane microfluidic cartridges, each lane comprising a PCR reaction zone"

Each of the challenged claims includes this limitation. Ex. 1003, 46:4–48:37. As discussed above, we have construed the term "multi-lane microfluidic cartridges" to mean "microfluidic cartridges each comprising a plurality of sample lanes with separate sample inlets and microfluidic networks." Petitioner argues that even under this construction, Zou I discloses a multi-lane microfluidic unit because "[e]ach lane includes an inlet, a PCR reaction chamber 11, and an exit reservoir 9" which serve as "separate sample inlets and microfluidic networks" for each lane. Pet. Reply 4–5 (citing Pet. 33, 14). Petitioner further argues that "Zou I further teaches that PCR can be carried out in each chamber 11." Pet. 34 (citing Ex. 1008, Abstract, 1:12–20, 2:49–54, 5:51–55, 8:30–35; Ex. 1001 ¶ 130). Petitioner

explains its contentions by reference to an annotated version of Zou I's Figure 4, reproduced below.

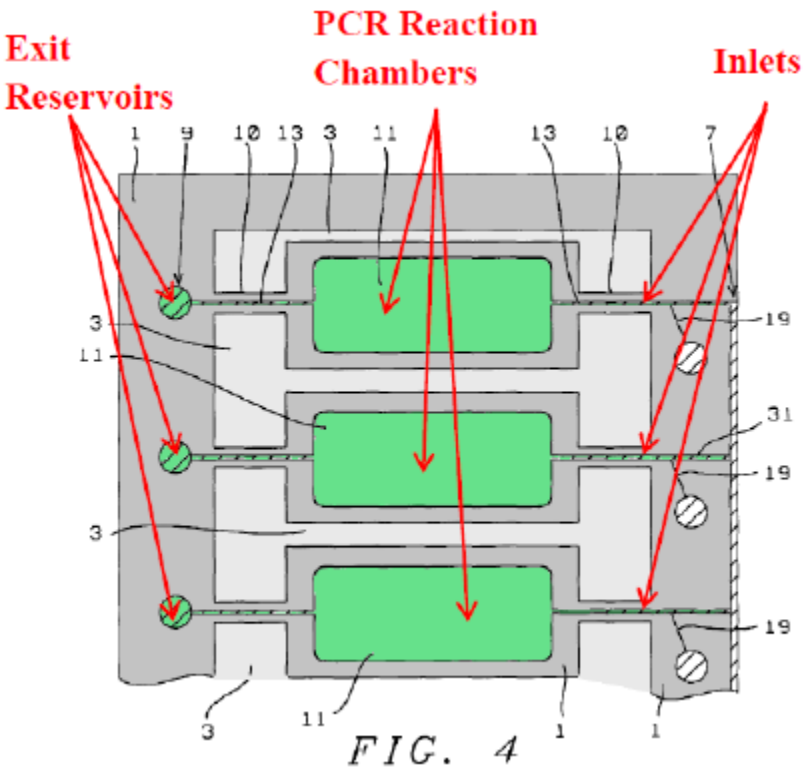

Pet. Reply 5. Figure 4 illustrates a multi-sample unit as described in Zou I (Ex. 1008, 5:4–6); in the annotated version of Figure 4 above, Petitioner shades in green and labels the parts of Zou I that purportedly correspond to each lane of the claimed "multi-lane microfluidic cartridge," i.e., inlets, PCR reaction chambers 11, and exit reservoirs 9. *Id.* Petitioner contends that Zou I's valve 8 and channel 31 together comprise a "separate sample inlet" as shown in detail in Figure 3. *Id.* (citing Ex. 1008, 4:43–47; Ex. 1026 ¶¶ 22–23).

Patent Owner argues that "Zou I does not disclose multiple separate microfluidic networks, but a *single microfluidic network*" because "Zou I has a single '*common* reservoir 7' that directs fluid to individual chambers (11) through a single channel (31)." PO Resp. 30. Patent Owner explains its

contention by reference to an annotated version of Figure 4, reproduced below.

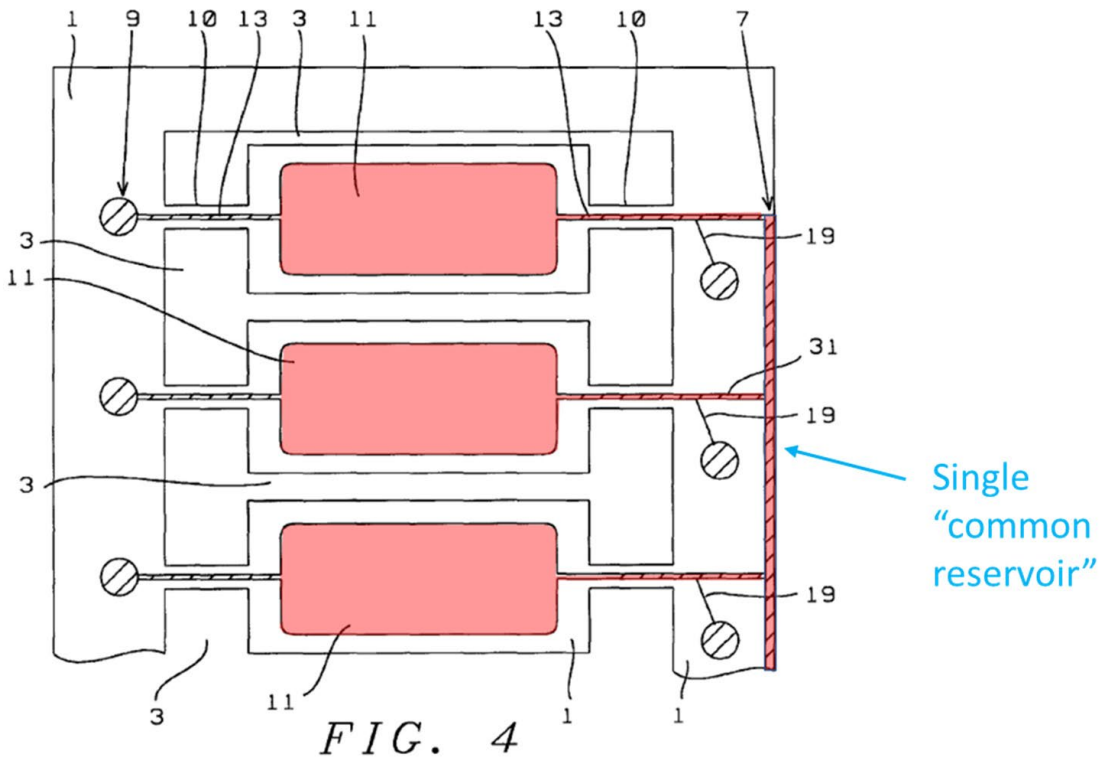

FIG. 4

Id. In the annotated version of Figure 4 above, Patent Owner's pink shading shows that "the PCR reaction zones (chambers 11) and the common reservoir are in fluid communication with one another and are part of a single fluidic network." *Id.* (citing Ex. 1008, 4:1–6). Patent Owner further argues that "Zou I is clear that reservoir 7 is its 'inlet fluid source reservoir;" (*id.* at 31 (citing Ex. 1008, 4:36, 6:12–15)) and reservoir 7 "is the inlet for all three chambers, as fluid is dispensed from that reservoir into each chamber … Zou I discloses multiple reaction chambers that share a common inlet, as opposed to distinct, independent inlets for the network associated with each chamber …." *Id.* (citing Ex. 2036 ¶ 171). Patent Owner also argues that "Petitioner offers no explanation or justification for why it identifies multiple inlets to chambers 11," when Zou I uses the term "inlet" to refer to

"reservoir 7." *Id.* at 32 (citing Ex. 1008, 4:36, 6:12–15). According to Patent Owner, "an 'inlet' is a term common in both the '900 patent and Zou I, and would have been understood to refer to a location where sample is input." *Id.* (citing Ex. 2036 ¶¶ 172–173).

Petitioner argues in its Reply that "Zou I describes element 7 as 'inlet fluid source reservoir 7,'" and a "POSA would understand reservoir 7 is the source of the fluid for the inlets, not the inlet itself." Pet. Reply 5–6 (citing Ex. 1008, 4:4; Ex. 1026 ¶ 25). Patent Owner contends in its Sur-Reply that "Petitioners' so-called 'inlets' (valve 8 and channel 31) are within the chip in Zou I," and, "[c]onversely, a sample inlet in the '900 patent is 'a location where the sample is input into the cartridge.'" Sur-Reply 8 (citing Ex. 1008, 4:1–6, Figs. 3 & 4; Ex. 2036 ¶¶ 376–378; Ex. 1027, 156:2–9; Ex. 1003, 15:4–7) (emphasis omitted).

We have considered the arguments and evidence of record and determine that Zou I does not teach a multi-lane microfluidic unit under our claim construction. In particular, we find that Zou I does not teach a plurality of sample lanes wherein each sample lane comprises a separate sample inlet. We agree with Patent Owner that Zou I teaches that all of the lanes are associated with a single sample inlet, namely, common reservoir 7. PO Resp. 31–32; Reply 7–10. As shown in Patent Owner's annotation of Zou I's Figure 4 *supra*, "the PCR reaction zones (chambers 11) and the common reservoir are in fluid communication with one another as a single fluidic network." *Id.* at 30 (citing Ex. 1008, 4:1–6). Zou I further teaches that "unprocessed fluid is stored in common reservoir 7 and is directed to chamber 11 through fluid-bearing channel 31," and that pressure valves 8 (not shown) "are placed at both ends of the chamber" in order to "prevent

unintended entry of fluid into the chamber." Ex. 1008, 4:30–35, 4:43–45. We credit Dr. Northrup's testimony that

> [a]n "inlet" is a common term used in the ['900] patent, Zou I, and understood in the art to refer to a location where sample is input. In Zou I, as the Zou I authors expressly stated, the "inlet" is a common reservoir that dispenses fluid to multiple chambers; Zou I Figure 4 does not include multiple inlets, each of which is associated with a separate lane.

Ex. 2036 ¶ 101.

Moreover, Petitioner does not direct us to, nor do we discern, any teaching in Zou I that its microfluidic unit is capable of analyzing a distinct sample in each lane, such that multiple different samples can be processed in the cartridge at the same time. In that regard, we credit Dr. Northrup's testimony that

> Zou I could not effectively function to analyze multiple separate samples independently. When a nucleic acid sample passes through a channel or container, it will contaminate that receptacle by leaving some nucleic acid behind. As illustrated in the further annotated Figure 4 of Zou [I] below, any second sample (pink) that passed through the common reservoir 7 of Figure 4 would be contaminated by the residue left by a first sample (blue), resulting in a mixture of both samples.

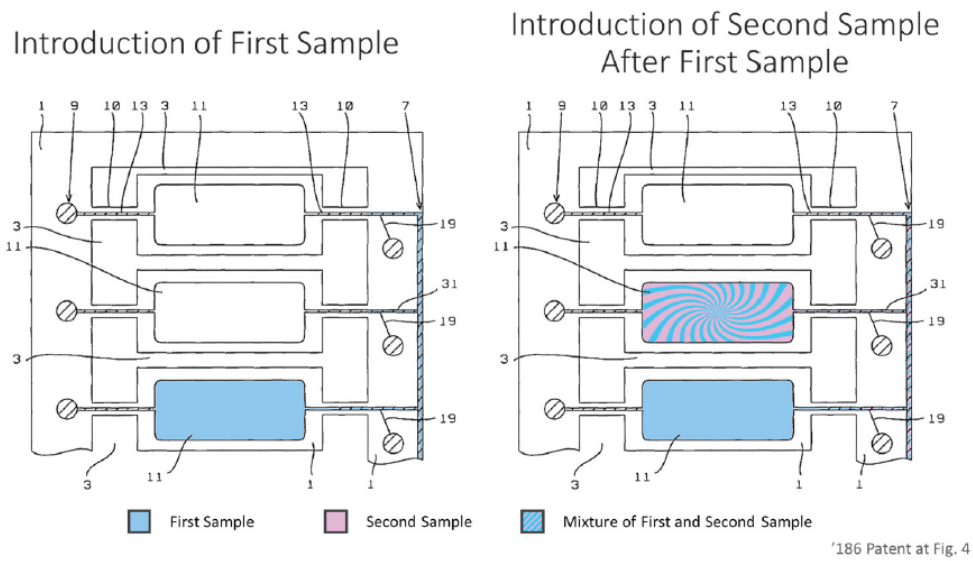

> A POSA would have understood that such cross-contamination would render the Figure 4 device unreliable, if not inoperable for its purpose.

Id. ¶¶ 104–105 (citing Ex. 1008, Figure 4).

We note that, in its Reply, Petitioner argues that "Zou I's Figure 5 shows an embodiment with at least four physically distinct fluid input locations." Reply 6 (citing Ex. 1008, Figure 4; Ex. 2012, 185:18–186:3; Ex. 1026 ¶ 28). In support of this argument, Dr. Gale testifies that

> [b]ased on the layout of the reaction chambers in Fig. 5 of Zou I and the layout of each reaction chamber from Fig. 4 of Zou I, there would be a maximum of 24 reaction chambers connected to one fluid reservoir if the reaction chambers were mirrored across the fluid reservoir, leading to a minimum of 4 physically distinct input ports.

Ex. 1026 ¶ 28. This argument is unpersuasive. Zou I does not discuss Figure 5 other than to say it "shows a full population of cycling chambers covering an entire wafer," and that it "shows how the sub-structure shown in FIG. 4 appears when full wafer 66 of silicon has been used to form multiple chambers." Ex. 1008, 3:24–25, 5:11–13. In light of these disclosures in

Zou I, Dr. Gale does not sufficiently explain why or how Zou I's Figure 5 discloses separate sample inlets for each sample lane, or that each sample lane in Figure 5 is associated with a separate sample inlet, as required by the claims of the '900 patent.

Petitioner further argues in its Reply that it would have been obvious to drill a fluid access hole in the glass cover of Zou I for each lane, because a person of ordinary skill in the art "would have (i) been motivated to provide physically distinct sample input ports, to avoid sample contamination, and (ii) had a reasonable expectation of success in doing so, via the known option of simply drilling fluid access holes in the glass cover." *Id.* at 7–8 (citing Ex. 2036 ¶ 57; Ex. 1027, 166:12–167:1, 168:10–170:4; Ex. 1015 ¶ 174; Ex. 1026 ¶ 30; Ex. 1008, 7:17–21). In support of this argument, Dr. Gale testifies that drilling access holes in the glass cover of Zou I's microfluidic chip would have been "a common technique by March 2006," and "it would have been trivial for a POSA to drill individual ports through the glass cover of Zou I in order to provide physically distinct ports into each of Zou I's microfluidic lanes." Ex. 1026 ¶ 30. Neither Petitioner nor Dr. Gale sufficiently explain, however, why a person of ordinary skill would have been motivated to make this modification, or how this modification would have affected how Zou I's microfluidic chip functions. For example, neither Petitioner nor Dr. Gale address how such access holes would interact, if at all, with Zou I's common reservoir. *See* PO Sur-Reply 10 (citing Ex. 1008, 4:1–11, 4:30–32; Ex. 2036 ¶¶ 101–105; PO Resp. 32–33). Patent Owner also raises issues with the newly introduced fluid flowing back into the common reservoir and intermixing with other samples (*id.* at 11–12 (citing Ex. 2068, 256:18–257:14; Ex. 2036 ¶¶ 102–105, 375–378)), and

evaporation of fluid samples resulting from the drilled access holes. *Id.* at 12 (citing Ex. 2021, 123). Petitioner does not rebut these points.

In an obviousness analysis, a sufficient reason must be shown as to why a person of ordinary skill in the art would have thought of combining or modifying the prior art to achieve the patented invention. *See Innogenetics, N.V. v. Abbott Labs.*, 512 F.3d 1363, 1374 (Fed. Cir. 2008). Here, Petitioner offers only the general proposition that drilling access holes into the glass cover of Zou I's microfluidic chip would have been a common technique Pet. Reply 7. Petitioner's argument and Dr. Gale's testimony with respect to the modification of Zou I leaves an analytical gap that does not apprise us of why a person of ordinary skill would have modified Zou I with access holes that would operate as separate sample inlets for each sample lane as required by the claims of the '900 patent.

Here, Petitioner attempts to imbue a person of ordinary skill with the knowledge of the claimed invention, when no prior art reference of record or other evidence conveys or suggests that knowledge. Without such evidence, Petitioner's argument that a person of ordinary skill would have modified Zou I in this way appears to be premised on Petitioner's knowledge of the '900 patent disclosure. This is improper hindsight reasoning. Petitioner needed to explain what would have led a person of ordinary skill at the time of the invention to consider modifying Zou I to include a separate sample inlet with each sample lane. Petitioner failed to provide such an explanation. *See W.L. Gore & Assoc., Inc. v. Garlock, Inc.*, 721 F.2d 1540, 1553 (Fed. Cir. 1983) (In an obviousness analysis, we must "cast the mind back to the time the invention was made" and "occupy the mind of one skilled in the art who is presented only with the references, and who is normally guided by the then-accepted wisdom in the art.").

For these reasons, after considering Petitioner's and Patent Owner's positions, as well as their supporting evidence, we are not persuaded that Petitioner has demonstrated that Zou I discloses a multi-lane microfluidic unit. We also note Petitioner's contention that to the extent Zou I does not expressly disclose a multi-lane microfluidic cartridge, "McNeely discloses at least four multilane microfluidic cartridges, each of which can be used to perform PCR on samples in the cartridge, with inlets and outlets for each lane." Pet. 34–35 (citing Ex. 1001 ¶¶ 79–80, 335; Ex. 1009 ¶¶ 96, 97, 138, Figs. 5, 6). Patent Owner argues that the Petition did not present sufficient evidence to support a contention that McNeely alone teaches this limitation of the challenged claims (Tr. 75–76), and also disputes that McNeely discloses multiple microfluidic lanes for performing reactions in parallel. PO Resp. 20. After considering the complete trial record, we determine that Petitioner also has not established by a preponderance of the evidence that McNeely discloses this limitation of the challenged claims. Petitioner presents no argument or evidence in support of its contention, other than the single sentence of the Petition quoted above, which also appears in the Gale Declaration. This conclusory assertion, without further explanation, fails to meet Petitioner's burden to demonstrate invalidity by a preponderance of the evidence.

Accordingly, we find that Petitioner has not established that the combination of Zou I and McNeely or Pourahmadi teaches a "multi-lane microfluidic cartridge, each lane comprising a PCR reaction zone" as required by the challenged claims.

b) Combination of Zou I and McNeely or Pourahmadi

Petitioner contends that a person of ordinary skill in the art would have been motivated to combine Zou I's PCR unit with a conventional integrated machine such as in Pourahmadi or McNeely, with a reasonable expectation of success. Pet. 27–32.

Petitioner relies on Zou I as teaching a microfluidic PCR "unit," or "chip," but not a cartridge. *E.g.* Pet. 27 ("the PCR unit of Zou I;" Zou I's "microfluidic chip"), 28 ("Zou I's multi-sample PCR unit"); Pet. Reply 10 ("a multi-lane microfluidic unit like Zou I"), 12–13 ("use Zou I's chip with current macro thermal cycler machines"), 14–15 ("Zou I's fully functional multi-lane microfluidic unit, virtually unaltered ..."). Thus, Petitioner does not dispute Patent Owner's assertion that Zou I discloses "a 'thermal cycler chip,' not a 'cartridge' – nor does it contain any reference to a cartridge." PO Sur-Reply 7 (citing Ex. 1008, 7:51–62, 8:45–63; PO Resp. 14–15, 30–31; Ex. 2036 ¶¶ 97–100, 537–538; Ex. 2068, 114:2–11; Ex. 2012, 179:21–180:5, 184:3–188:9, 220:5–221:15).

As to the cartridge requirement of the challenged claims, Petitioner relies on Pourahmadi or McNeely as teaching a cartridge as part of a "multi-cartridge integrated machine." Pet. 27. Specifically, Petitioner argues that Pourahmadi "discloses at least four microfluidic cartridges, each of which can be used to perform PCR on samples in the cartridge" *id.* at 35 (citing Ex. 1001 ¶ 335; e.g. Ex. 1015 ¶¶ 13, 48, 54, 76, 77, 123, 129), and that "McNeely discloses at least four multilane microfluidic cartridges, each of which can be used to perform PCR on samples in the cartridge, with inlets and outlets for each lane." *Id.* at 34–35 (citing Ex. 1001 ¶ 79–80, 335; Ex. 1009 ¶¶ 96, 97, 138, Figs. 5, 6). The Petition does not point to any teaching

in Pourahmadi of using a microfluidic unit or chip with Pourahmadi's cartridge. In the Reply, however, Petitioner argues Pourahmadi "teaches various known ways a POSA could generally 'incorporate[]' microfluidic chips into cartridges – for example, 'silicon glue,' 'fused or welded,' or 'recessed regions' that are 'dimensioned' to accept the microfluidic chip." Pet. Reply 17 (citing Ex. 1015 ¶¶ 176–181; Ex. 1026 ¶¶ 119, 121).

Petitioner presents various reasons why a person of ordinary skill would have been motivated to combine Zou I with Pourahmadi or McNeely. Pet. 27–32. Several of these reasons relate specifically to the combination of Zou I's microfluidic unit with a cartridge, such as: "Zou I itself expressly teaches combining its microfluidic chip into existing machines" such as Pourahmadi or McNeely (*id.* at 27 (citing Ex. 1001 ¶¶ 118, 318; Ex. 1008, 1:62–65, 8:15–17)); "inclusion of Zou I's multi-sample PCR unit in multiple cartridges of a single machine would be a workload or throughput multiplier" (*id.* at 28); "the cartridges of McNeely or Pourahmadi, would have predictably provided the necessary interfacing with the outside world" (*id.* at 30 (citing Ex. 1001 ¶¶ 123–124, 325)); "a POSA would have known that one needed to 'package' or 'interface' the microfluidic chip in a way that allowed an operator to quickly and efficiently interact with it" (*id.* (citing e.g. Ex. 1009, Abstract, ¶¶ 24, 82, 138–140)); and "incorporating the Zou I unit into a cartridge to be operated on by a machine ... would have provided the well-known benefit of better and more consistent control on the conditions to which the sample was exposed ... [i]t would also have reduced the potential for contamination of the sample, or for the sample to contaminate the laboratory working area ... would also have been expected to improve safety ...." (*id.* at 31 (citing Ex. 1001 ¶ 329–330; Ex. 1009 ¶ 9; Ex. 1020, 16:17–22)). In its Reply, Petitioner argues "a POSA would have

had a reasonable expectation of success" because the level of ordinary skill was high, the art was relatively advanced, and "the combinations are straightforward – Zou I's fully functional multi-lane microfluidic unit, virtually unaltered and maintaining its 'basic principles of operation,' into Pourahmadi or McNeely's cartridge-based systems." Pet. Reply 14–15. Petitioner argues that "using a microfluidic PCR chip like Zou I as a cartridge was routine and predictable by March 2006." *Id.* at 18 (citing Ex. 1026 ¶¶ 119–121; Ex. 1030, 846–847)).

Patent Owner responds that Petitioner's arguments regarding motivation and reasonable expectation of success are conclusory and contradicted by the record evidence. PO Sur-Reply 17. Patent Owner asserts that this is "a very complex field" (*id.* at 18 (citing Ex. 2036 ¶¶ 32–42; Ex. 2018, 2121)), "the state of the art was early and aspirational" (*id.* at 17 (citing Ex. 2036 ¶¶ 25–42; Ex. 2018, 2121)), none of the references teach how to interface a generic chip with a cartridge, "both experts agree that the proposed combinations would 'have to be designed' to 'match each other,' including design of 'the right interfaces,' 'heat sinks' and other components" (*id.* (citing Ex. 2068, 149:4–150:13; Ex. 2057, 170; Ex. 2002, 245–248, 259–261; Ex. 2058, 536; Ex. 2036 ¶ 99)), and "skilled artisans reported challenges in seeking to interface a PCR chip within a cartridge" with regard to placement of heaters and temperature uniformity (*id.* (citing Ex. 1003, 845; Ex. 2001, 16.5.1; Ex. 2023, 346–353)). Patent Owner further argues that specific features of Zou I's chip do not support a motivation to combine, e.g. fragility of the monocrystalline silicon beams that connect each of Zou I's PCR reaction chambers to the frame (PO Resp. 37–38 (citing Ex. 1008, 4:17–21, Figs. 1B, 4; Ex. 2012, 44:18–22)); PO Sur-Reply 18–19 (citing Ex.

1026 ¶¶ 51–52; Ex. 1031, 421–422; Ex. 2068, 180:19–181:10, 182:3–19, 284:18–286:22)).

Having considered the complete trial record, we determine that Petitioner has failed to sufficiently demonstrate that the combination of Zou I and McNeely or Pourahmadi teaches multi-lane microfluidic cartridges, because Petitioner has failed to establish by a preponderance of the evidence that a person of ordinary skill in the art would reasonably have expected to be successful in combining Zou I's microfluidic chip with a cartridge as taught by McNeely or Pourahmadi. In order to demonstrate that the challenged claims are obvious, a petitioner must demonstrate "that a skilled artisan would have been motivated to combine the teachings of the prior art references to achieve the claimed invention, and that the skilled artisan would have had a reasonable expectation of success in doing so." *ActiveVideo Networks, Inc. v. Verizon Commc'ns, Inc.*, 694 F.3d 1312, 1327–28 (Fed. Cir. 2012) (quoting *Pfizer, Inc. v. Apotex, Inc.*, 480 F.3d 1348, 1361 (Fed. Cir. 2007). A petitioner must articulate "[1] how specific references could be combined, [2] which combination(s) of elements in specific references would yield a predictable result, or [3] how any specific combination would operate or read on the asserted claims." *Id.*

Focusing on the parties' arguments pertaining to how Zou I and McNeely or Pourahmadi could be combined, which combination of elements in the references would yield a predictable result, and how the combination would operate or read on the challenged claims, we determine that the evidence on this record is not sufficient to show that a person having ordinary skill in the art would have had a reasonable expectation of success in attempting to combine the teachings of Zou I with McNeely or Pourahmadi. Although the Petition sets forth various rationales for why a

person of ordinary skill would have had reason to combine the teachings of Zou I and McNeely or Pourahmadi (Pet. 27–32), the rationales are general in nature and do not address any specific modification to either of the references. Further, the Petition includes a single reference to reasonable expectation of success, in a conclusory statement that "a POSA would have been motivated to combine the PCR unit of Zou I with a multi-cartridge integrated machine such as in McNeely or Pourahmadi, with a high expectation of success." Pet. 27. The Gale Declaration is similarly conclusory as to how Zou I and McNeely or Pourahmadi could have been combined by the ordinary artisan, and does not elaborate on the artisan's reasonable expectation of success. Such conclusory assertions, lacking factual substantiation, are insufficient for evaluating reasonable expectation of success as part of an obviousness determination. *Wasica Fin. GmbH v. Cont'l Auto. Sys., Inc.,* 853 F.3d 1272, 1286 (Fed. Cir. 2017). Thus, Petitioner did not make out its obviousness case based on combining Zou I and McNeely or Pourahmadi, in the Petition. 35 U.S.C. § 312(a)(3).

As discussed above, Petitioner in its Reply identifies teachings in Pourahmadi regarding "known ways a POSA could generally 'incorporate[]' microfluidic chips into cartridges." Pet. Reply 17 (citing Ex. 1015 ¶¶ 176–181; Ex. 1026 ¶¶ 119–121), and also relies on McNeely as teaching "various options for clamping its 'interface device' to a glass slide to create a cartridge 604." *Id.* (citing Ex. 1009, Figs. 2, 23–24, 30, 32, ¶¶ 82, 126–129; Ex. 1026 ¶ 120). Petitioner's assertion that "using a microfluidic PCR chip like Zou I as a cartridge was routine and predictable by March 2006" (Pet. Reply 18), however, is based on Exhibit 1030, which Petitioner did not submit with the Petition.

Moreover, we find persuasive Patent Owner's arguments that microfluidic PCR was not routine and predictable by March 2006, but rather a very complex field that presented challenges with regard to uniform heating, detection of small volume reactions, contamination, design and configuration of a microfluidic network, and functionally interfacing the reaction instrument with control machinery. Dr. Northrup provides factual substantiation for Patent Owner's arguments, with reference to numerous contemporaneous publications in the field (Exs. 2001, 2002, 2023, 2026, 2032, 2033) that persuasively explain why "[w]here PCR microfluidic devices are designed as chips, connecting these chips to heat sources or detection mechanisms, can be a complex task, particularly in view of the need to ensure that other functionalities (e.g. uniform temperature, optical detection, multiple reaction chambers, etc.) are not adversely affected." Ex. 2036 ¶ 39. Therefore, we credit Dr. Northrup's testimony that in light of the state of the art in March 2006, a person of ordinary skill would not reasonably have expected a combination of Zou I and McNeely or Pourahmadi to be successful, because of the particular challenges listed above. Ex. 2036 ¶¶ 811–825. Dr. Gale's testimony that interfacing a PCR chip with a cartridge, such as Zou I with McNeely or Pourahmadi, would require that they be designed to match with each other, also supports that conclusion. Ex. 2068, 149:4–150:13.

Dr. Northrup also credibly explains why Zou I's teaching relating to integration into a micro total analysis system does not support combination of Zou I's unit with Pourahmadi's cartridge. Ex. 2036 ¶¶ 753–759. As Dr. Northrup explains, Zou I does not describe integrating its chip into a "total-analysis" cartridge-based system as asserted by Petitioner, but rather describes the possibility of integrating Zou I's PCR unit into a total analysis

system on a single chip, i.e. combining Zou I's chip with another chip capable of providing other functionalities. *Id.* Additional evidence (Ex. 2001) corroborates Dr. Northrup's opinion, which is unrebutted on this point.

We disagree with Petitioner's assertions that combining Zou I and McNeely or Pourahmadi to arrive at the claimed invention would have been "straightforward" and that "each of Zou I, Pourahmadi, and McNeely already disclosed functional microfluidic cartridge devices for performing PCR" (Pet. Reply 15, 17), because the evidence presented by Patent Owner and Dr. Northrup's testimony, as discussed above, contradicts those assertions. We also find that Dr. Gale's opinions in the Second Gale Declaration that "a POSA would expect to be able to combine Zou I's microfluidic unit, virtually unaltered and including its thermally-isolated chamber structure" into a cartridge system, and that "Zou I's unit is more or less a cartridge itself" (Ex. 1026 ¶¶ 67, 70, 105) are conclusory and not supported by the evidence of record. In particular, we note that Dr. Gale's statements that Zou I's unit "would have been easily combined, virtually unaltered, into Pourahmadi or McNeely's cartridge-based systems" and that "[a]t most, a POSA would have to attach Zou I's multi-lane microfluidic unit to a very basic cartridge housing sized to fit the receiving bay of Pourahmadi or McNeely" are unsupported by sufficient analysis or objective evidence. *Id.* ¶ 114. They are also inconsistent with Dr. Gale's testimony that a POSA would have combined "Zou I's multi-sample unit with a cartridge configured for an integrated machine," and his consistent usage of "unit" or "chip" (instead of "cartridge") to describe Zou I's device. Ex. 1001 ¶ 312; *see also id.* ¶¶ 76 ("Zou I further provides examples of a multi-lane microfluidic unit for conducting PCR on multiple samples."), 322

("implementing Zou I's multi-sample PCR unit in each of the four cartridges of McNeely. . . . Zou I's multi-sample PCR unit in each of the multiple cartridges of a machine such as disclosed by McNeely or Pourahmadi"); 329 ("incorporating the Zou I unit into a cartridge configured to be operated on a machine such as McNeely or Pourahmadi"); 331 ("Zou I discloses multi-lane microfluidic units"); Ex. 1026 ¶ 119 ("using a microfluidic PCR chip-like unit like Zou I, in a cartridge-based machine such as Pourahmadi or McNeely, was common and routine by March 2006"). Furthermore, Dr. Gale does not address the evidence supporting Dr. Northrup's testimony regarding the complexity of connecting microfluidic chips to heat sources or detectors, as discussed above. Thus, we would remain unpersuaded that Petitioner met its evidentiary burden of showing particular evidence that supports its proposed combination even if the evidence and arguments from Petitioner's Reply had been set forth properly in the Petition.

c) Conclusion

For the foregoing reasons, we conclude that Petitioner has not demonstrated by a preponderance of the evidence that claims 1–8, 12, 14, 15, 17, and 19–22 of the '900 patent would have been obvious over the combined teachings of Zou I and McNeely or Pourahmadi.[12]

D. Claims 9–11, 13, 16, and 18

Petitioner argues that: (1) claims 9–11 and 13 would have been obvious over the combined teachings of Zou I, McNeely or Pourahmadi, and

[12] Patent Owner argues that objective indicia (namely, commercial success) support the nonobviousness of the challenged claims. PO Resp. 62–64. Because we find that Petitioner has not demonstrated that the claims would have been obvious over the asserted prior art, we need not address Patent Owner's evidence regarding objective indicia of nonobviousness.

Zou II; (2) claim 18 would have been obvious over the combined teachings of Zou I, McNeely or Pourahmadi, and Chow; and (3) claim 16 would have been obvious over the combined teachings of Zou I and McNeely or Pourahmadi, and Duong. Pet. 65–80. Each of claims 9–11, 13, 16, and 18 depend, directly or indirectly, from independent claim 1 or 7, and, therefore, require "multi-lane microfluidic cartridges, each lane comprising a PCR reaction zone." Ex. 1003, 47:5–48:9. Thus, for the same reasons given above with regard to Petitioner's challenge of claim 1, we conclude that Petitioner has not demonstrated by a preponderance of the evidence that 9–11, 13, 16, and 18 would have been obvious over the asserted prior art.

III. PATENT OWNER'S MOTION TO EXCLUDE

Patent Owner moves to exclude Exhibits 1030 and 1032 under Federal Rules of Evidence 402 and 403. Paper 43. We have not considered either of these exhibits in reaching our decision, and therefore Patent Owner's motion is dismissed as moot.

IV. CONCLUSION

Petitioner has not shown by a preponderance of the evidence that claims 1–22 are unpatentable under 35 U.S.C. § 103(a) in view of the various proposed combinations of prior art references.

V. ORDER

In consideration of the foregoing, it is hereby:

ORDERED that Petitioner has not shown by a preponderance of the evidence that claims 1–22 of the '900 Patent are unpatentable;

FURTHER ORDERED that Patent Owner's Motion to Exclude is dismissed as moot; and

FURTHER ORDERED that, because this is a Final Written Decision, parties to the proceeding seeking judicial review of the decision must comply with the notice and service requirements of 37 C.F.R. § 90.2.

In summary:

Claims	35 U.S.C. §	Reference(s)/Basis	Claims Shown Unpatentable	Claims Not shown Unpatentable
1–8, 12, 14, 15, 17, 19–22	103	Zou I and McNeely or Pourahmadi		1–8, 12, 14, 15, 17, 19–22
9–11, 13	103	Zou I, McNeely or Pourahmadi, and Zou II		9–11, 13
18	103	Zou I, McNeely or Pourahmadi, and Chow		18
16	103	Zou I, McNeely or Pourahmadi, and Duong		16
Overall Outcome				1–22

FOR PETITIONER:

Gary Speier
J. Derek Vandenburgh
Jonathan D. Carpenter
CARLSON, CASPERS, VANDENBURGH & LINDQUIST
gspeier@carlsoncaspers.com
dvandenburgh@carlsoncaspers.com
jcarpenter@carlsoncaspers.com

FOR PATENT OWNER:

Heather M. Petruzzi
Barish Ozdamar, Ph.D.
Christopher M. Cherry
WILMER CUTLER PICKERING HALE AND DORR LLP
Heather.Petruzzi@wilmerhale.com
Barish.Ozdamar@wilmerhale.com
Chris.Cherry@wilmerhale.com

Kerry S. Taylor
Maria V. Stout
Benjamin B. Anger
KNOBBBE, MARTENS, OLSON & BEAR, LLP
2kst@knobbe.com
2mvs@knobbe.com
2bba@knobbe.com