Trials@uspto.gov
571-272-7822

Paper: 53
Date: September 21, 2020

UNITED STATES PATENT AND TRADEMARK OFFICE

BEFORE THE PATENT TRIAL AND APPEAL BOARD

INGENICO INC.,
Petitioner,

v.

IOENGINE, LLC,
Patent Owner.

IPR2019-00929
Patent 9,774,703 B2

Before ELIZABETH M. ROESEL, SHEILA F. McSHANE, and SCOTT B. HOWARD, *Administrative Patent Judges*.

ROESEL, *Administrative Patent Judge*.

JUDGMENT
Final Written Decision
Determining Some Challenged Claims Unpatentable
Granting Petitioner's Motion to Exclude
Dismissing Patent Owner's Motion to Exclude
35 U.S.C. § 318(a)

Ingenico Inc. ("Petitioner") filed a Petition (Paper 2, "Pet.") seeking *inter partes* review of claims 55–63, 65–72, 74, 75, 77, 78, 81–87, 89, 90, 92–98, 100, 101, 103–112, 114–121, 123, 124, and 126–129 (the "challenged claims") of U.S. Patent No. 9,774,703 B2 (Ex. 1001, "the '703 Patent"). IOENGINE, LLC ("Patent Owner") filed a Preliminary Response. Paper 11 ("Prelim. Resp."). On September 26, 2019, we instituted an *inter partes* review as to all claims challenged in the Petition. Paper 16 ("Inst. Dec.").

After institution, Patent Owner filed a Patent Owner Response (Paper 26, "PO Resp."), Petitioner filed a Reply (Paper 31, "Pet. Reply"), and Patent Owner filed a Sur-reply (Paper 32, "PO Sur-reply"). An oral hearing was held on June 24, 2020, and a transcript of the hearing is included in the record. Paper 52.

We have jurisdiction under 35 U.S.C. § 6. This Final Written Decision is issued pursuant to 35 U.S.C. § 318(a). For the reasons that follow, we determine that Petitioner has shown by a preponderance of the evidence that some, but not all, of the challenged claims of the '703 Patent are unpatentable.

I. BACKGROUND

A. Real Parties in Interest

Pursuant to 37 C.F.R. § 42.8(b)(1), Petitioner identifies (i) Ingenico Inc., (ii) Ingenico Corp., and (iii) Ingenico Group S.A. as the real parties in interest. Pet. 3.

B. Related Matters

Pursuant to 37 C.F.R. § 42.8(b)(2), the parties identify the following district court proceedings involving the '703 Patent and related U.S. Patent Nos. 9,059,969 B2 ("the '969 Patent") and 8,539,047 B2 ("the '047 Patent"):[1]

> *IOENGINE, LLC v. PayPal Holdings, Inc.*, No. 18-cv-452 (D. Del., filed Mar. 23, 2018); and
>
> *Ingenico Inc. v. IOENGINE, LLC*, No. 18-cv-826 (D. Del., filed June 1, 2018).

Paper 4 (Petitioner's Updated Mandatory Notices), 1; Paper 12 (Patent Owner's Revised Mandatory Notices), 2. Both actions involve Patent Owner's accusations of infringement with respect to products supplied by Petitioner. Paper 4, 1; Prelim. Resp. 45–46. According to Patent Owner, the district court proceedings have been consolidated before the Honorable William C. Bryson, of the United States Court of Appeals for the Federal Circuit, sitting by designation. Prelim. Resp. 2. The district court proceedings are stayed. *IOENGINE, LLC v. PayPal Holdings, Inc.*, Nos. 18-452, 18-826, 2019 WL 3943058 (D. Del. Aug. 21, 2019) (stay order) (Circuit Judge Bryson, sitting by designation); *IOENGINE, LLC v. PayPal Holdings, Inc.*, Nos. 18-452, 18-826 (D. Del. Jan. 27, 2020) (denying motion to vacate stay).

---

[1] The application that issued as the '703 Patent was filed as a continuation of the application that issued as the '969 Patent, which was filed as a continuation of the application that issued as the '047 Patent. Ex. 1001, code (63).

Pursuant to 37 C.F.R. § 42.8(b)(2), the parties identify the following *inter partes* review proceedings in which Ingenico Inc. is the petitioner:

IPR2019-00416, involving the ’047 Patent;

IPR2019-00584, involving the ’703 Patent; and

IPR2019-00879, involving the ’969 Patent.

A final written decision in IPR2019-00416 was issued July 13, 2020. The petition in IPR2019-00584 was denied, and a final written decision in IPR2019-00879 is being issued concurrently with this Decision.

The parties identify the following *inter partes* review proceedings in which PayPal, Inc. is the petitioner:

IPR2019-00884, involving the ’047 Patent;

IPR2019-00885, involving the ’047 Patent;

IPR2019-00886, involving the ’047 Patent;

IPR2019-00887, involving the ’047 Patent;

IPR2019-00906, involving the ’969 Patent;

IPR2019-00907, involving the ’969 Patent;

IPR2019-00930, involving the ’703 Patent; and

IPR2019-00931, involving the ’703 Patent.

Paper 4, 2; Paper 12, 2. The petitions in all of the above proceedings involving PayPay, Inc. as petitioner were denied.

Petitioner also identifies U.S. Application Nos. 15/712,714 and 15/712,780, which Petitioner states are pending patent applications that claim the benefit of the ’703 Patent. Paper 4, 2.

C. The '703 Patent (Ex. 1001)

The '703 Patent was issued September 26, 2017, from an application filed May 26, 2015, and asserts the benefit of a chain of continuation applications, the earliest of which was filed March 23, 2004. Ex. 1001, codes (22), (45), and (63).

The '703 Patent is titled "Apparatus, method and system for a tunneling client access point" and discloses "a portable device configured to communicate with a terminal and a network server and execute stored program code in response to user interaction with an interactive user interface." Ex. 1001, codes (54), (57). According to the '703 Patent, the "portable device contains stored program code configured to render an interactive user interface on a terminal output component to enable the user the control processing activity on the portable device and access data and programs from the portable device and a network server." *Id.*; *see also id.* at 2:60–3:3 (summarizing the disclosure).

An objective of the '703 Patent is to provide a portable computing and storage device "in an extremely compact form." Ex. 1001, 1:23–25, 2:31–34. Another objective is to allow users "to employ traditional large user interfaces they are already comfortable with" and to provide greater portability, provide greater memory footprints, draw less power, and provide better security for data on the device, as compared with personal digital assistants (PDAs), such as the Palm Pilot. *Id.* at 1:25–29, 2:34–47.

To achieve these objectives, the '703 Patent discloses a tunneling client access point ("TCAP") that can be plugged into a desktop or laptop computer and has "a highly portable 'thumb' footprint." Ex. 1001, 2:47–50, 2:53–55; *see also id.* at 22:30–31 ("The TCAP may be packaged in plugin

sticks, often, smaller than the size of a human thumb."). The TCAP uses the computer's user interface and input/output (I/O) peripherals, while providing its own storage, execution, and/or processing resources. *Id.* at 2:50–53. According to the '703 Patent, the TCAP provides "the equivalent of a plug-n-play virtual private network (VPN)" and "accessing of remote data in an easy and secure manner." *Id.* at 2:55–59.

Figure 1 of the '703 Patent is reproduced below:

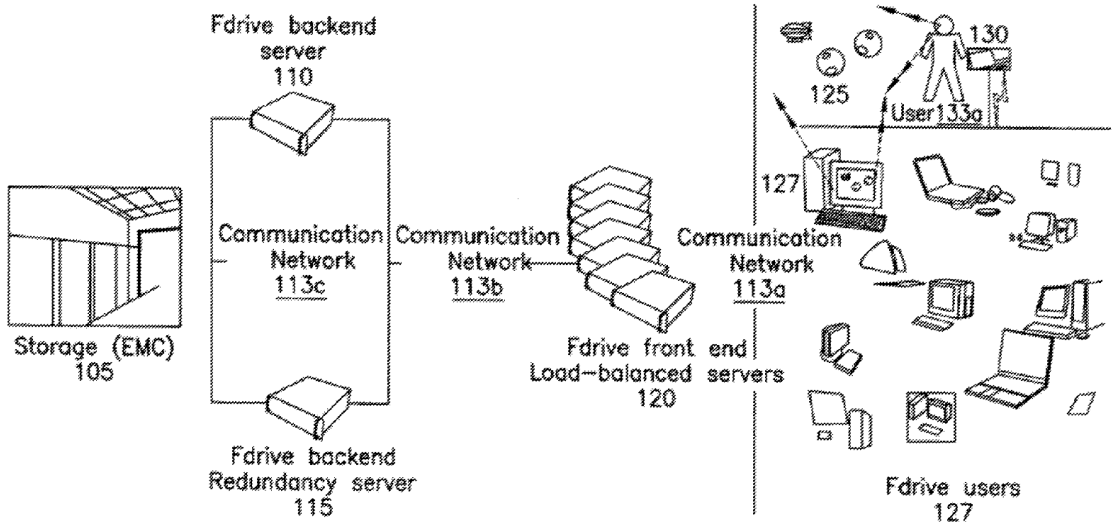

Fig. 1

Figure 1 illustrates a topology between a TCAP and a TCAP server. Ex. 1001, 3:50–52. As shown in Figure 1, the topology includes remote storage 105; servers 110, 115, and 120; communication network 113a, 113b, and 113c; access terminals 127; TCAP 130; and user 133a. *Id.* at 3:53–62, 4:7–30, Fig. 1. According to the '703 Patent, TCAP 130 may be connected to an access terminal ("AT") 127, e.g., a server, workstation, desktop computer, laptop, or PDA, by a universal serial bus ("USB") connection or a

wireless protocol, such as Bluetooth or WiFi. *Id.* at 3:55–66. The '703 Patent discloses that "[o]nce the TCAP has engaged with an AT, it can provide the user with access to its storage and processing facilities." *Id.* at 4:4–6.

According to the '703 Patent, "[i]f the AT is connected to a communication network 113, the TCAP may then communicate beyond the AT." Ex. 1001, 4:7–8. In this manner, "the TCAP can provide extended storage and/or processing resources by engaging servers 110, 115, 120, which have access to and can provide extended storage 105 to the TCAP through the AT." *Id.* at 4:9–12. Such communications may occur over various communications networks 113, such as the Internet, a local area network (LAN), a wide area network (WAN), a high speed LAN, or a fiber-channel. *Id.* at 4:14–19, 4:24–30.

The '703 Patent describes the user experience as follows:

> Thus, to the user 133a, the contents of the TCAP 130 appear on the AT as being contained on the TCAP 125 even though much of the contents may actually reside on the servers 115, 120 and/or the servers' storage facilities 105. In these ways, the TCAP "tunnels" data through an AT. The data may be provided through the AT's I/O for the user to observe without it actually residing on the AT. Also, the TCAP may tunnel data through an AT across a communications network to access remote servers without requiring its own more complicated set of peripherals and I/O.

Id. at 4:31–40.

Figure 10 of the '703 Patent is reproduced below:

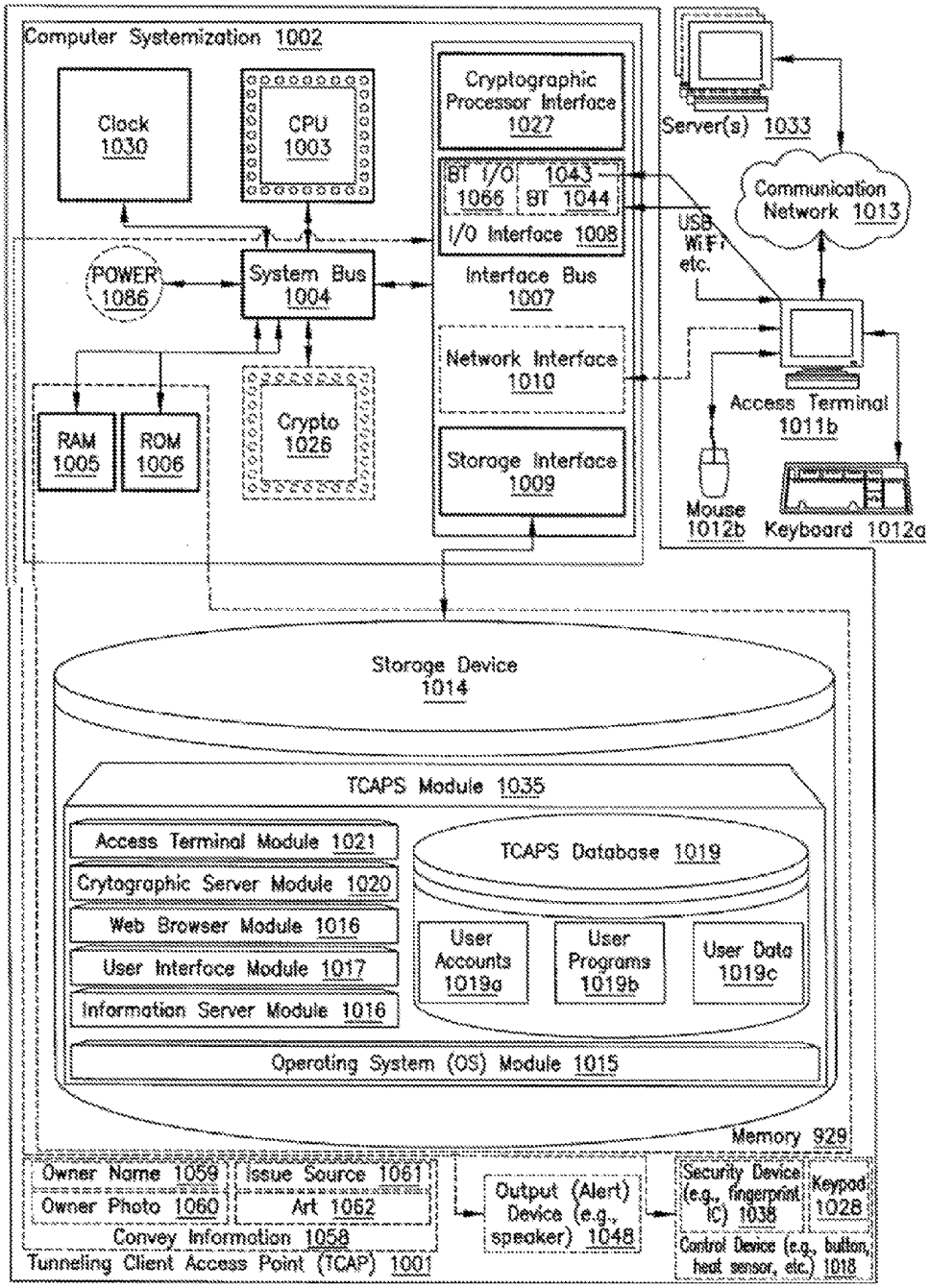

Fig.10

Figure 10 is a block diagram illustrating TCAP controller 1001, which "may serve to process, store, search, identify, instruct, generate, match, and/or

update data within itself, at a TCAPS, and/or through an AT." Ex. 1001, 3:39–40, 22:20–27. Figure 10 shows that TCAP controller 1001 includes CPU 1003, system bus 1004, random access memory ("RAM") 1005, read only memory ("ROM") 1006, interface bus 1007, input output ("I/O") interface 1008, storage interface 1009, network interface 1010, storage device 1014, and power source 1086, among other structures. *Id.* at 23:25–33, 23:63–67, 24:12–18, Fig. 10. The '703 Patent discloses that TCAP controller 1001 may be connected to access terminal 1011b, which may be connected to user input devices, e.g., keyboard 1012a and mouse 1012b, and to communications network 1013. *Id.* at 22:36–41.

D. Illustrative Claim

The '703 Patent contains 129 claims. The Petition challenges some claims within the range 55–129. Challenged claims 55, 78, 93, and 104 are independent. Claim 55 is illustrative of the challenged claims and is reproduced below:

> 55. A method implemented on a portable device comprising a processor, a memory having executable program code stored thereon, and an external communication interface for enabling the transmission of a plurality of communications between the portable device and a terminal, the terminal comprising a processor, an input component, an output component, a network communication interface, and a memory configured to store executable program code, including first program code which, when executed by the terminal processor, is configured to affect the presentation of an interactive user interface by the terminal output component, and second program code which, when executed by the terminal processor, is configured to provide a communications node on the terminal to facilitate communications to the portable device and to a communications network node through the terminal network communication interface, the method comprising:

(a) causing the terminal to execute the first program code to affect the presentation of an interactive user interface by the terminal output component;

(b) executing third program code stored on the portable device memory to provide a communications node on the portable device configured to coordinate with the communications node on the terminal and establish a communications link between the portable device and the terminal, and to facilitate communications to the terminal and to a communications network node through the terminal network communication interface;

(c) executing, in response to a communication received by the portable device resulting from user interaction with the interactive user interface, fourth program code stored on the portable device memory to cause a communication to be transmitted to a communications network node; and

(d) facilitating communications through the terminal network communication interface to a communications network node.

Ex. 1001, 36:1–37.

E. Prior Art and Asserted Grounds

Petitioner asserts the following grounds of unpatentability:

Challenged Claims	35 U.S.C. §	Reference(s)
55, 56, 58–63, 65–72, 75, 77, 78, 81–87, 90, 92–98, 101, 103–105, 107–112, 114–121, 124, 126–129	102(b)[2]	Iida[3]
61, 62, 65, 110, 111, 114	103(a)	Iida, Yang[4]
57, 106	103(a)	Iida, Shaffer[5]
74, 89, 100, 123	103(a)	Iida, Davis[6]

F. Additional Evidence

In addition to the prior art cited above, Petitioner relies on a Declaration of James T. Geier. Ex. 1027. Patent Owner cross-examined Mr. Geier and filed transcripts of the depositions as Exhibit 2110 (pertaining to IPR2019-00416) and Exhibit 2122 (pertaining to IPR2019-00879 and IPR2019-00929).

Patent Owner relies on Declarations of Kevin Butler, Ph.D. Ex. 2003 (filed with the Preliminary Response); Ex. 2139 (filed with the Patent Owner

---

[2] The Leahy-Smith America Invents Act ("AIA"), Pub. L. No. 112-29, 125 Stat. 284, 287–88 (2011), amended 35 U.S.C. §§ 102, 103, effective March 16, 2013. Because the '703 Patent asserts the benefit of an application filed before this date, the pre-AIA versions of §§ 102 and 103 apply.

[3] Ex. 1003, US 2003/0020813, published January 30, 2003.

[4] Ex. 1006, US 6,467,087 B1, issued October 15, 2002.

[5] Ex. 1028, US 5,784,461, issued July 21, 1998.

[6] Ex. 1029, US 6,088,805, issued July 11, 2000.

Response). Petitioner cross-examined Dr. Butler and filed transcripts of the depositions as Exhibit 1046 (pertaining to IPR2019-00416) and Exhibit 1047 (pertaining to IPR2019-00879 and IPR2019-00929).

II. DISCUSSION

A. Legal Standards

"In an [*inter partes* review], the petitioner has the burden from the onset to show with particularity why the patent it challenges is unpatentable." *Harmonic Inc. v. Avid Tech., Inc.*, 815 F.3d 1356, 1363 (Fed. Cir. 2016) (citing 35 U.S.C. § 312(a)(3) (requiring *inter partes* review petitions to identify "with particularity . . . the evidence that supports the grounds for the challenge to each claim")); *see also* 37 C.F.R. § 42.104(b) (2019) (requiring a petition for *inter partes* review to identify how the challenged claim is to be construed and where each element of the claim is found in the prior art patents or printed publications relied upon).

A claim is anticipated under 35 U.S.C. § 102 only if "each and every element as set forth in the claim is found, either expressly or inherently described, in a single prior art reference." *Verdegaal Bros. v. Union Oil Co.*, 814 F.2d 628, 631 (Fed. Cir. 1987). "In the context of anticipation, the question is not whether a prior art reference 'suggests' the claimed subject matter." *AstraZeneca LP v. Apotex, Inc.*, 633 F.3d 1042, 1055 (Fed. Cir. 2010) (quoting party's argument). "Rather, the dispositive question regarding anticipation is whether one skilled in the art would reasonably understand or infer from a prior art reference that every claim element is disclosed in that reference." *Id.* (brackets and internal quotes omitted) "[A]nticipation by inherent disclosure is appropriate only when the reference

discloses prior art that must necessarily include the unstated limitation." *Rexnord Indus., LLC v. Kappos*, 705 F.3d 1347, 1355 (Fed. Cir. 2013).

A claim is unpatentable under 35 U.S.C. § 103 if "the differences between the subject matter sought to be patented and the prior art are such that the subject matter as a whole would have been obvious at the time the invention was made to a person having ordinary skill in the art to which said subject matter pertains." *KSR Int'l Co. v. Teleflex Inc.*, 550 U.S. 398, 406 (2007). The question of obviousness is resolved on the basis of underlying factual determinations, including: (1) the scope and content of the prior art; (2) any differences between the claimed subject matter and the prior art; (3) the level of skill in the art; and when in evidence (4) objective evidence of nonobviousness, i.e., secondary considerations. *See Graham v. John Deere Co. of Kan. City*, 383 U.S. 1, 17–18 (1966).

Additionally, the obviousness inquiry typically requires an analysis of "whether there was an apparent reason to combine the known elements in the fashion claimed by the patent at issue." *KSR*, 550 U.S. at 418 (citing *In re Kahn,* 441 F.3d 977, 988 (Fed. Cir. 2016) (requiring "articulated reasoning with some rational underpinning to support the legal conclusion of obviousness")). Furthermore, Petitioner does not satisfy its burden of proving obviousness by employing "mere conclusory statements," but "must instead articulate specific reasoning, based on evidence of record, to support the legal conclusion of obviousness." *In re Magnum Oil Tools Int'l, Ltd.*, 829 F.3d 1364, 1380 (Fed. Cir. 2016).

B. Level of Ordinary Skill in the Art

In the Institution Decision, we adopted the following description of a person of ordinary skill in the art ("POSITA") provided by Petitioner and Mr. Geier.

> A POSITA would have had a Bachelor of Science degree in Electrical Engineering, Computer Science, Computer Engineering, or related discipline, experience in programming software and firmware for computer peripheral devices and databases/servers, and a working understanding of computer hardware, operating systems, encryption, data storage, user interfaces, and peripheral and portable device communication protocols (e.g., parallel ports, serial ports, RS-232, USB, Bluetooth, WiFi, and the like).

Dec. 20–21; Pet. 9–10; Ex. 1027 ¶ 13.

For purposes of this proceeding, Patent Owner and Dr. Butler apply the Board's adopted definition of a POSITA. PO Resp. 3; Ex. 2139 ¶¶ 12, 13. Both parties' experts state, however, that their opinions would not change based upon which party's definition of a POSITA is adopted. Ex. 2139 ¶ 13; Ex. 2110, 240:24–241:6.

We determine that the foregoing description of a POSITA is commensurate in scope with the disclosure and claims of the '703 Patent and consistent with the level of skill reflected in the asserted prior art. *See* Ex. 1001, Figs. 1, 9, and 10 (illustrating TCAP and TCAP server, including elements similar in nature and scope to those listed in the foregoing description of a POSITA). Accordingly, we adopt the foregoing description of a POSITA.

C. Claim Construction

Under our rules, we use the same claim construction standard in an *inter partes* review proceeding as would be used by a district court to

construe a claim in a civil action involving the validity or infringement of a patent. 37 C.F.R. § 42.100(b). Under that standard, claim terms are given their ordinary and customary meaning, as would have been understood by a person of ordinary skill in the art at the time of the invention, in light of the language of the claims, the specification, and the prosecution history of record. *Id.*; *Phillips v. AWH Corp.,* 415 F.3d 1303, 1312–19 (Fed. Cir. 2005) (en banc); *Thorner v. Sony Comput. Entm't Am. LLC*, 669 F.3d 1362, 1365–66 (Fed. Cir. 2012).

Below we address the parties' dispute regarding the meaning of two claim terms. We determine that no other claim term requires express construction for purposes of resolving the controversy. *See Vivid Techs., Inc. v. Am. Sci. & Eng'g, Inc.*, 200 F.3d 795, 803 (Fed. Cir. 1999) ("only those terms need be construed that are in controversy, and only to the extent necessary to resolve the controversy"); *see also Nidec Motor Corp. v. Zhongshan Broad Ocean Motor Co.*, 868 F.3d 1013, 1017 (Fed. Cir. 2017) (applying *Vivid Techs.* in the context of *inter partes* review).

1. "interactive user interface"

In the Institution Decision, we construed "interactive user interface" ("IUI") as "a display with which a user may interact to result in the portable device taking action responsively." Inst. Dec. 17. Based on the parties' arguments and the record now before us, we revise our initial claim construction for the reasons discussed below.

Patent Owner argues that IUI should be construed to mean "a display containing interface elements with which a user may interact to result in the terminal taking action responsively by responding to the user." PO Resp. 10.

Petitioner argues that IUI should be construed as "a presentation (display) with which a user may interact to result in the computer (portable device) taking action responsively." Pet. Reply 1.

The parties' dispute focuses on two issues: (1) whether an IUI requires "interface elements," as in Patent Owner's construction; and (2) whether the computer that takes action responsively is "the portable device," as in Petitioner's proposed construction, or "the terminal," as in Patent Owner's construction. We address each of these issues below.

Interface elements. Patent Owner contends that an IUI should be construed as "containing interface elements with which a user may interact." PO Resp. 10. Patent Owner relies on the background section of the '703 Patent, which describes a "user interface" and "[c]omputer interaction interface elements such as check boxes, cursors, menus, scrollers, and windows." *Id.* at 11; PO Sur-reply 2 (both quoting Ex. 1001, 1:57–67). According to Patent Owner, "interaction interface elements . . . are what allow the user to interact with, or 'engage' the IUI" and "without them, there is no part of the interface for the user to interact with." PO Resp. 11 (citing Ex. 1001, 1:57–62 and various passages from cols. 8–13; Ex. 2139 ¶ 46); PO Sur-reply 2 (citing Ex. 1001, 1:57–66).

Petitioner argues that an IUI does not require interface elements. Pet. Reply 4. Petitioner relies on the '703 Patent's reference to "display, execution, interaction, manipulation, and/or operation of program modules and/or system facilities through textual and/or graphical facilities." *Id.* (quoting Ex. 1001, 26:63–65).

After considering the parties' arguments and evidence, we determine that an IUI should be construed as requiring "interface elements," as

proposed by Patent Owner. In the Institution Decision, we noted the non-limiting nature of the Specification passages relied upon by Patent Owner. Inst. Dec. 15. On the present record, however, Patent Owner persuades us that, although the Specification provides various examples of interaction interface elements that are merely illustrative and not required for an IUI, the interface elements themselves are not optional. PO Resp. 17; PO Sur-reply 2–3. Our determination is supported by the Specification, which describes a "user interface" as having "[c]omputer interaction interface elements such as check boxes, cursors, menus, scrollers, and windows." Ex. 1001, 1:51–62. The open-ended term "such as" signifies that the listed elements are examples, but the disclosure does not mean that there can be IUI without some sort of interface elements. Our determination is also consistent with the Specification's disclosure of various examples of interface elements and user interaction with such elements. *Id*. at 10:54–60 ("user interface element 558"); *id*. at 11:36–40 ("user interface element 617"); *id*. at 12:18–22 ("TCAP interface 715 . . . may be activated by engaging an interface element to unfurl the interface . . . ."). These Specification passages persuade us that interface elements are a necessary part of an IUI.

A requirement for interface elements is supported by a technical dictionary definition and the testimony of Petitioner's expert, Mr. Geier. Relying on a definition from the *Computer Glossary*, Mr. Geier testifies that "a user interface includes a combination of elements, such as menus, screen design, keyboard commands, command language, and help screens, which create the way a user interacts with a computer." Ex. 1027 ¶ 29 (citing

Ex. 1009,[7] 3); *see Phillips*, 415 F.3d at 1318 ("technical dictionaries . . . can assist the court in determining the meaning of particular terminology to those of skill in the art of the invention"). Both parties rely upon this portion of Mr. Geier's testimony. Pet. 10; PO Sur-reply 2 (both citing Ex. 1027 ¶ 29). The requirement for interface elements is reinforced by Mr. Geier's deposition testimony. Ex. 2110, 15:8–16 ("Q. . . . The point is that the interactive user interface has to have elements with which the user interacts. Correct? A. Well, there's going to be some sort of element that the user is going to interact with."). Mr. Geier's testimony is consistent with the '703 Patent's description of a "user interface" as including "[c]omputer interaction interface elements." Ex. 1001, 1:51–62. *Cf. Phillips*, 415 F.3d at 1318 ("a court should discount any expert testimony 'that is clearly at odds with the claim construction mandated by the" intrinsic evidence).

Accordingly, we construe the term IUI as requiring interface elements.

Which computer takes action responsively? The parties agree that an IUI should be construed as requiring that the user interaction "result in [a computer] taking action responsively." Pet. 11; PO Resp. 10; Pet. Reply 1. The parties dispute which computer takes action responsively, the terminal (as in Patent Owner's construction) or the portable device (as in Petitioner's construction).

After considering the parties' arguments and evidence, we determine that the construction for IUI should not specify which computer—the terminal or the portable device—takes action responsively. In the Institution

---

[7] Ex. 1009, The Computer Glossary, Ninth Edition, 2001.

Decision, we construed an IUI as requiring that the portable device take action responsively. Inst. Dec. 15–17. The record developed after institution persuades that our construction was incorrect in this respect. On the present record, we determine that the term IUI, as used in the '703 Patent, is broad enough to encompass responsive action by ***either or both*** the terminal and the portable device.

As Patent Owner correctly observes, the Petition identifies the terminal as taking action in response to the user interaction. PO Resp. 19 (quoting Pet. 11). Specifically, when addressing the meaning of IUI, the Petition asserts:

> Sample displays are provided in the drawings of the '703 patent. A number of the displays respond to text inputs from an input component to elicit ***a responsive action from the terminal***. . . . For example, inputting registration information to screen 515 in Figure 5, if successful, will produce follow-up screen 517 and otherwise produces an error message.

Pet. 11 (citing Ex. 1001, 8:4–7, 10:7–9; Ex. 1027 ¶ 29) (emphasis added). In view of Petitioner's assertion and the underlying Specification example, it would be error to identify only the portable device as the computer that takes action in response to a user interaction with the IUI.

The Institution Decision observes that claims 1 and 55 recite responsive action by the portable device. Inst. Dec. 16 (citing Ex. 1001, 32:3–8, 36:29–34). Patent Owner persuades us, however, that these additional limitations of claims 1 and 55 should not be read into the term IUI. PO Resp. 20–22; *Phillips*, 415 F.3d at 1314 ("[T]he claim in [*Phillips*] refers to 'steel baffles,' which strongly implies that the term 'baffles' does not inherently mean objects made of steel."). Moreover, Patent Owner is correct that, in claims 55, 78, 93, and 104, the portable device's responsive

action is ***not directly*** in response to user interaction with an IUI, but only indirectly. Ex. 1001, 36:29–31 (claim 55: "***in response to a communication*** received by the portable device resulting from user interaction with the interactive user interface") (emphasis added); *id.* at 38:40–42, 40:17–19, 41:32–34 (same language in claims 78, 93, and 104).

Our determination that the responsive computer should not be limited to either the terminal or the portable device is supported by Patent Owner's comparison between unchallenged claims 1, 32, 46, and 47 and challenged claims 55, 79, 93, and 104:

> Another critical difference is that, in the unchallenged claims, it is the memory of the ***portable device processor*** that stores the code configured to present the IUI, and the claim covers systems in which the ***portable device executes*** that code and the ***terminal does not***. This is crucial because ***the device that executes the code relating to presentation of the IUI*** is the one that ***takes action responsively*** by responding to the user. The Unchallenged claims allows for that to be the portable device, which stores the applicable code and may also run it. By contrast, in challenged claims 55, 79, 93, and 104, that device must be the ***terminal***, not the ***portable device***.

PO Resp. 23–24.

Patent Owner is correct that, in the unchallenged claims, ***the portable device*** stores and executes program code for presenting an IUI, and the portable device responds to user interaction with the IUI. Ex. 1001, 31:63–65, 32:3–8 (claim 1); *id.* at 33:65–67, 34:5–7 (claim 32); *id.* at 34:65–67, 35:5–10 (claim 46); *id.* at 35:20–21, 35:26–28 (claim 47). In the challenged claims, however, it is ***the terminal*** that stores and executes program code for presenting an IUI, and the portable device responds only ***indirectly*** to user interaction with the IUI. *Id.* at 36:9–11, 36:29–31 (claim 55); *id.* at 38:24–

26, 38:40–42 (claim 78); *id.* at 39:64–66, 40:17–19 (claim 93); *id.* at 41:4–6, 41:32–34 (claim 104).

Absent clear evidence to the contrary, the term IUI should be given the same construction across all claims. *See In re Varma*, 816 F.3d 1352, 1363 (Fed. Cir. 2016) ("the principle that the same phrase in different claims of the same patent should have the same meaning is a strong one, overcome only if 'it is clear' that the same phrase has different meanings in different claims" (quoting *Fin Control Sys. Pty, Ltd. v. OAM, Inc.*, 265 F.3d 1311, 1318 (Fed. Cir. 2001))). Under this principle, Patent Owner's comparison of between the challenged and unchallenged claim supports a claim construction that does not specify which computer—the portable device or the terminal—takes action in response a user interaction with an IUI.

The Specification of the '703 Patent provides additional support for a construction of IUI that refers to a generic computer as taking responsive action, as opposed to specifying either the terminal or the portable device. For example, the Specification describes how, in response to a user interacting with the interface (double clicking on an icon), the AT (terminal) may treat the TCAP (portable device) as a memory device and retrieve information from the TCAP. Ex. 1001, 4:54–65. In that circumstance, the terminal is taking responsive action. However, the Specification continues by describing another case in which "the user's action . . . is directed at executing on the TCAP," and "all of the requirements . . . are handled by the TCAP's processor and the AT would only be used as a mechanism for user input and output and as a conduit through which the TCAP may send files." *Id*. at 4:65–5:8. Thus, the Specification of the '703 Patent supports either computer taking responsive action.

Our claim construction. For the reasons discussed above, we construe "interactive user interface" to mean "a display containing interface elements with which a user may interact to result in a computer taking action responsively."

2. "through the terminal network communication interface"

Claims 55, 78, 93, and 104, i.e., all of the challenged independent claims, recite "communications . . . to a communications network node through the terminal network communication interface" and "communications through the terminal network communication interface to a communications network node." *See, e.g.*, Ex. 1001, 36:14–16, 36:35–37 (claim 55). Patent Owner contends that these phrases should be construed to mean "communicate/cause a communication to be sent through the terminal's network interface with the/to a communications network node, without the terminal having access to information being communicated." PO Resp. 24. According to Patent Owner, both the intrinsic record and the experts' testimony supports limiting the claims to "tunneling." *Id.* at 24–29. Petitioner opposes Patent Owner's construction. Pet. Reply 5–7.

After considering the parties' arguments and evidence and consistent with the Institution Decision, we decline to adopt Patent Owner's construction. *See* Inst. Dec. 18–20.

We start with the words of the claims. The claims do not expressly recite "tunneling" or otherwise state that the terminal does not have access to the information being communicated. *See, e.g.*, Ex. 1001, 36:14–16, 36:35–37 (claim 55). In fact, the claims recite that one function of program code stored on the portable device memory is to "establish a communications link between the portable device and the terminal, and ***to***

facilitate communications to the terminal and to a communications network node through the terminal network communication interface." Ex. 1001, 36:24–28, 38:35–39, 40:11–15, 41:25–30 (claims 55, 78, 93, 104). There is no requirement that the terminal not have access to the communications. Thus, based on the ordinary meaning of the words of the claims, the phrase, "through the terminal network communication interface," does not require tunneling, nor require that the communications occur "without the terminal having access to information being communicated," as provided in Patent Owner's construction.

The absence of any recitation of tunneling stands in contrast to the claims of the related '006 Patent.[8] Unlike the claims of the '703 Patent, claim 1 of the '006 Patent recites a "portable ***tunneling*** storage and processing apparatus." Ex. 1020, 30:60–61 (emphasis added). Claim 1 of the '006 Patent also recites encryption (*id.* at 31:40–44), which Patent Owner states is "one way to accomplish what tunneling requires—that the terminal not have access to the tunneled information." PO Resp. 25–26 n.3. In fact, every independent claim of the '006 Patent explicitly recites either tunneling or a type of tunneling (encryption). Ex. 1020, 33:1–6 (claim 13); *id.* at 33:65–34:3 (claim 20); *id.* at 34:16–17, 34:62–67 (claim 24). Thus, the claims of the '006 Patent demonstrate that the patentee knew how to claim tunneling and encryption, and the absence of similar language in the claims of the '703 Patent gives rise to a presumption that they are not so

---

[8] Ex. 1020, US 7,861,006 B2, issued Dec. 28, 2010 ("the '006 Patent"). The '703 Patent claims the benefit of the application that issued as the '006 Patent through a series of continuation applications. *See* Ex. 1001, code (63).

limited. *See Seachange Int'l, Inc. v. C-COR, Inc.*, 413 F.3d 1361, 1369 (Fed. Cir. 2005) ("[T]here is . . . a presumption that two independent claims have different scope when different words or phrases are used in those claims.").

Patent Owner's evidence is not sufficient to overcome the presumption that tunneling is not required by the challenged claims. Although Patent Owner directs us to various portions of the '703 Patent that discuss tunneling or encryption (PO Resp. 25–27), we do not read those requirements from the Specification into the claims. The Federal Circuit has held that that a patent applicant can act as his own lexicographer and limit the scope of the claim based on statements in the Specification:

> Our case law has recognized that "the specification may reveal a special definition given to a claim term by the patentee that differs from the meaning it would otherwise possess." [*Phillips*, 415 F.3d] at 1316. When the patentee acts as its own lexicographer, that definition governs. *See id.* "To act as its own lexicographer, a patentee must 'clearly set forth a definition of the disputed claim term' other than its plain and ordinary meaning." *Thorner v. Sony Comput. Entm't Am. LLC*, 669 F.3d 1362, 1365 (Fed. Cir. 2012) (quoting *CCS Fitness, Inc. v. Brunswick Corp.*, 288 F.3d 1359, 1366 (Fed. Cir. 2002)). We have also found instances where "the specification may reveal an intentional disclaimer, or disavowal, of claim scope." *Phillips*, 415 F.3d at 1316. In those situations, it is again the inventor's disavowal that is dispositive of the claim construction. *See id*. "To disavow claim scope, the specification must contain 'expressions of manifest exclusion or restriction, representing a clear disavowal of claim scope.'" *Retractable Techs., Inc. v. Becton, Dickinson & Co.*, 653 F.3d 1296, 1306 (Fed. Cir. 2011) (quoting *Epistar Corp. v. Int'l Trade Comm'n*, 566 F.3d 1321, 1335 (Fed. Cir. 2009)).

Cont'l Circuits LLC v. Intel Corp., 915 F.3d 788, 796–97 (Fed. Cir. 2019). At most, the Specification discusses various embodiments that, for example, encrypt data. *See, e.g.*, Ex. 1001, 13:23–29, 28:10–66. But it is not proper to read limitations from specific embodiments into the claims:

> Though understanding the claim language may be aided by the explanations contained in the written description, it is important not to import into a claim limitations that are not a part of the claim. For example, a particular embodiment appearing in the written description may not be read into a claim when the claim language is broader than the embodiment.

SuperGuide Corp. v. DirecTV Enters., Inc., 358 F.3d 870, 875 (Fed. Cir. 2004). "[A]lthough the specification often describes very specific embodiments of the invention, [the Federal Circuit has] repeatedly warned against confining the claims to those embodiments." *Phillips*, 415 F.3d at 1323.

Not reading a tunneling or encryption limitation into the claim is also consistent with the ordinary meaning of the word "through." According to one dictionary, "through" means "by way of" and is used as a function word to indicate "passage from one end or boundary to another" or "movement into at one side or point and out at another and especially the opposite side of." Ex. 3001 (Merriam-Webster Dictionary). Based on the ordinary meaning of the word "through," the communication must travel from the portable device to the communications node "by way of" the terminal network interface of the terminal. But the ordinary meaning of "through" does not prohibit the terminal from having access to the information. Nor has Patent Owner directed us to anything in the '703 Patent that persuades us that the inventor intended to give "through" a special meaning.

Nor are we persuaded by Patent Owner's arguments based on *VirnetX* and other cases.[9] In *VirnetX*, the Federal Circuit's construction was premised on the undisputed assertion that the term "secure" did not have a plain and ordinary meaning and had to be defined by reference to the specification. *VirnetX*, 767 F.3d at 1317 ("As an initial matter, we note that there is no dispute that the word 'secure' does not have a plain and ordinary meaning in this context, and so must be defined by reference to the specification."). In this case, the term "through" has an ordinary meaning as evidenced by the dictionary definition discussed above. And, at the very least, there is a dispute as to whether the phrase, "through the terminal network communication interface," has a plain and ordinary meaning in the context of the claim. *See* PO Resp. 28; Pet. Reply 6. Accordingly, under the facts of this case, it is inappropriate to rely on *VirnetX* to import limitations from the specification into the claims. *See Sanofi-Aventix U.S. LLC v. Mylan GmbH*, No. 17-9105 (SRC), 2019 WL 2067373 (D.N.J. May 9, 2019) (not applying *VirnetX* because the claim limitation has an ordinary meaning).

Similarly inapplicable is *GPNE*. Although the Federal Circuit held that the district court did not err by construing the term "node" to mean a pager, it did so because (1) "GPNE concedes that the specification consistently refers to 'nodes' as 'pagers'" and (2) "the inventor's Rule 131 declaration consistently and exclusively describes the invention as a system

---

[9] PO Resp. 27 (citing *GPNE Corp. v. Apple Inc.*, 830 F.3d 1365 (Fed. Cir. 2016); *In re Abbott Diabetes Care Inc.*, 696 F.3d 1142 (Fed. Cir. 2012); *VirnetX, Inc. v. Cisco Sys., Inc.*, 767 F.3d 1308 (Fed. Cir. 2014); *Eon-Net LP v. Flagstar Bancorp*, 653 F.3d 1314 (Fed. Cir. 2011)).

of pagers." *GPNE*, 830 F.3d at 1370–71. In contrast, Patent Owner has not pointed to any Specification language—let alone repeated and consistent language—in which the '703 Patent states that "through" means a communication without the terminal having access to the information being communicated. *See* PO Resp. 25–28. Although the cited sections of the '703 Patent discuss tunneling and encrypting the data, there is nothing tying tunneling and encrypting to the word "through" or the phrase, "through the terminal network communication interface."

Similarly inapplicable is *Eon-Net.* In that case, the Federal Circuit held that the terms "file" and "document" are limited to information derived from a hard copy document because the specification defined the invention in those terms. *Eon-Net*, 653 F.3d at 1321–22. For example, in that case, the specification stated that "*[t]he invention is directed to* a system for efficiently processing information originating from hard copy documents," more specifically to "a hard copy document application program interface which minimizes the need to manually process hard copy documents." *Id.* at 1321 (emphasis added). Similarly, the court held that the summary of the invention "defines the 'invention' as providing 'an application program interface which inputs a diversity of hard copy documents using an automated digitizing unit and which stores information from the hard copy documents in a memory as stored document information.'" *Id*. In contrast, the Specification references cited by Patent Owner are permissive, exemplary, or tied to a particular embodiment. *See, e.g.*, Ex. 1001, 5:5–8 (passage begins, "[i]n such a case"); PO Resp. 25 (citing this passage of Specification). Patent Owner does not point us to repeated Specification language tying the invention to tunneling or encryption. To the contrary,

Petitioner directs us to amendments that ***removed*** references to the concept of tunneling from the Specification. Pet. Reply 5–6. Patent Owner does not dispute these changes, arguing that only "a negligible fraction" of the references to tunneling were removed. We find it significant, however, that the references to tunneling were removed from the Abstract and the Field section of the Specification. *Compare* Ex. 1001, code (57), 1:15–18 (Abstract and Field section of the '703 Patent), *with* Ex. 1020, code (57), 1:8–9 (Abstract and Field section the '006 Patent).

Contrary to Patent Owner's suggestion, the Specification does not consistently describe the access terminal ("AT") as not having access to communications to and from the TCAP. The '703 Patent describes examples in which "the TCAP can be used by the AT as a storage device from which it can access and store data" and "the AT may treat the TCAP as a memory device and retrieve information from the TCAP." Ex. 1001, 4:57–65; *see also id.* at 6:21–23 (describing how the TCAP "may be accessed and manipulated as a standard storage device through the AT's operating system"). These disclosures distinguish this case from *EON-Net* and belie Patent Owner's contention that the Specification consistently describes tunneling and blocking the terminal's access to communications.

Also inapplicable is *Abbott*. In *Abbott*, the Federal Circuit held that the Board's claim construction was incorrect because (1) it was inconsistent with disparaging remarks in the patent about external cables and wires and (2) every embodiment showed a sensor without external cables in wires. *Abbott*, 696 F.3d at 1149. In contrast, in this case, (1) not every embodiment of the '703 Patent prevents the AT/terminal from retrieving data from the TCAP (*e.g.*, Ex. 1001, 4:57–65), and (2) Patent Owner has not identified any

disparaging remarks. Thus, *Abbott* is inapplicable to the facts of this case. *See Astek Holdings, Inc. v. CoolIT Sys. Inc.*, No. C-12-4498 EMC, 2013 WL 6327691, *6 (N.D. Cal. Dec. 3, 2013) (distinguishing *Abbott* where "[n]o such disparagement of indirect coupling is contained in the specification at issue in the case at bar").

Contrary to Patent Owner's argument, we are not persuaded that Petitioner's expert made any admission about the meaning of "through the network terminal communication interface" in the '703 Patent. PO Resp. 28–29 (quoting Ex. 2110, 117:15–24, 118:15–119:3, 119:11–15). The testimony relied upon by Patent Owner was in the context of questions about Iida. *See* Ex. 2110, 117:15–120:10. The testimony provides Mr. Geier's understanding of how Iida's camera and terminal function. It does not provide evidence relevant to the meaning of the word "through" in the '703 Patent claims. Specifically, beginning on page 111 of the deposition, the questions focused on Iida. *Id.* at 111:7–18. Then, in the middle of the testimony Patent Owner relies upon, Mr. Geier explicitly refers to Iida:

> Q. So you're saying that information being transferred through the terminal means that the terminal can't access the data?
>
> A. I'm just giving you what I think a person of ordinary skill in the art would understand. If you move content such as image data from something like a camera to a server and it goes through the terminal, that you wouldn't -- that doesn't mean you're going to be accessing it at the terminal. I imagine, and I implement this, maybe you could, I don't know why you'd want to access it at the terminal if the intent is to move it from the portable device to the server. *And based on the way that Iida explains the establishment of this communications network through dialing through the access points and all this*, that it's

> establishing an end-to-end communications network from the camera to the server.

Id. at 117:15–118:10 (emphasis added). Nothing in the remainder of the cited testimony indicates that either the questions or the answers relate to anything other than Iida.

Moreover, Mr. Geier never testified that that terminal could not access the data; instead, he simply stated that the terminal "wouldn't be accessing the content." Ex. 2110, 118:15–119:4. Not accessing the content—because there is no need for the terminal to do so—is not the same as not having the ability to access the content.

Accordingly, we decline to adopt Patent Owner's interpretation of the phrase "through the terminal network communication interface" as meaning "without the terminal having access to information being communicated." No further construction of this term is necessary.

D. Petitioner's Anticipation Ground

Petitioner contends that claims 55, 56, 58–63, 65–72, 75, 77, 78, 81–87, 90, 92–98, 101, 103–105, 107–112, 114–121, 124, and 126–129 of the '703 Patent are unpatentable as anticipated by Iida. Pet. 13–53. We first provide an overview of Iida and then analyze the claims challenged in this ground.

1. Iida (Ex. 1003)

Iida discloses an image photographing and ordering system and method for allowing a user to photograph images and to order prints. Ex. 1003, code (57), ¶¶ 2, 10, 11. The system includes a photographing device, such as a digital still camera or a digital video camera, which is lent to a user in exchange for a rental fee. *Id.* ¶ 12. The photographing device

comprises a photographing component, a storage component, a communication component, a save control component, and a management component. *Id.* ¶ 13. The photographing component "converts an optical image into image data," which is temporarily stored in the storage component. *Id.* The communication component "can communicate with a communication apparatus having a function of communicating with an image server connected to a computer network," for example, the Internet. *Id.* ¶¶ 13, 14. The communication apparatus is equipment that is possessed by the user and can be carried by the user, such as a portable telephone, PDA, wearable computer, or mobile computer. *Id.* ¶ 14. According to Iida, image data is transferred from the camera's storage component through the communication component to the communication apparatus, which saves the data in an image saving area of the image server. *Id.* ¶¶ 13, 15.

Iida discloses an embodiment of an image photographing and ordering system that includes digital still camera 12, portable terminal 14, and image server 18. Ex. 1003 ¶¶ 51, 57–59, Figs. 1A–C, 2A, 2B.

Figure 1A of Iida is reproduced below:

FIG. 1A

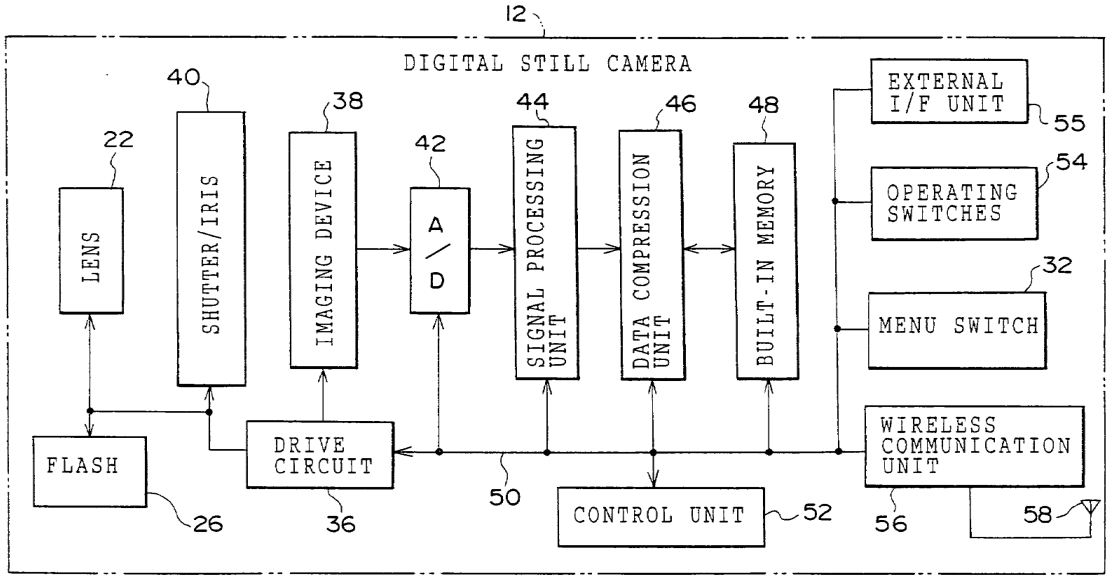

Iida Figure 1A is a block diagram showing the schematic construction of digital still camera 12. Ex. 1003 ¶¶ 51, 57, 60. As shown in Iida Figure 1A, digital still camera 12 includes memory 48, control unit 52, wireless communication unit 56, and antenna 58, among other structures. *Id.* ¶¶ 65, 66. Iida discloses that control unit 52 includes a CPU, a ROM, and a RAM and functions as a save control component and a management component. *Id.* ¶ 65. According to Iida, "[a]n antenna 58 is connected to the wireless communication unit 56 for performing wireless communication via the antenna 58 with the portable terminal 14 possessed by the user." *Id.* ¶ 66.

Figure 1B of Iida is reproduced below:

FIG. 1B

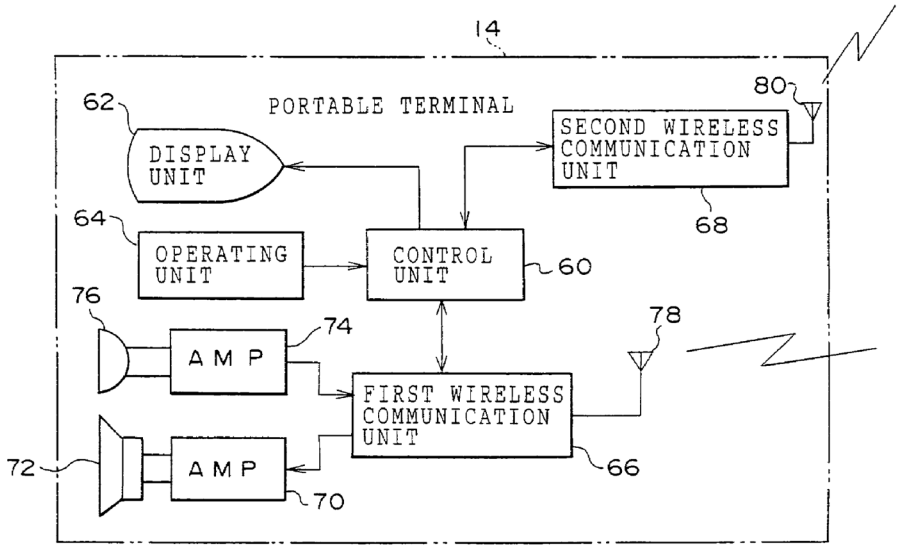

Iida Figure 1B is a block diagram showing the schematic construction of portable terminal 14. Ex. 1003 ¶¶ 51, 57, 68. According to Iida, portable terminal 14 may be the user's portable telephone or a PDA, wearable computer, or mobile computer. *Id.* ¶¶ 57, 144.

As shown in Iida Figure 1B, terminal 14 includes control unit 60, display unit 62, operating unit 64, wireless communication units 66 and 68, and antennas 78 and 80, among other structures. Ex. 1003 ¶ 68. According to Iida, control unit 60 comprises a CPU, a ROM, and a RAM. *Id.* Display unit 62 comprises an LCD. *Id.* Operating unit 64 comprises "a ten-keys, touch pad or the like." *Id.* Iida discloses that wireless communication unit 66 and antenna 78 communicate with a telephone network, and wireless communication unit 68 and antenna 80 communicate with camera 12. *Id.* ¶ 69. According to Iida, the telephone network is connected via the Internet to image server 18, which comprises storage medium 88 having image data saving areas where users of rented digital still cameras 12 can store image data. *Id.* ¶ 70, Fig. 1B.

Iida discloses control processing executed by control unit 52 of digital camera 12 and control unit 60 of terminal 14. Ex. 1003 ¶¶ 79–107, 113, 114, 119–121, 126–143, Figs. 4A–4D (flow charts illustrating processing executed by a control unit in the digital still camera). When the user turns on a menu switch on digital still camera 12, a menu screen is displayed on display unit 62 of portable terminal 14. *Id.* ¶ 82, Fig. 4A (step 204).

Figure 6A of Iida is reproduced below.

FIG. 6A

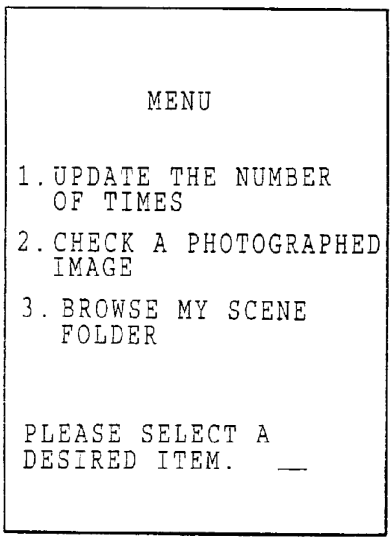

Iida Figure 6A shows an example menu screen that is displayed on the display unit 62 of portable terminal 14. Ex. 1003 ¶¶ 56, 83. Under the control of control unit 52 of camera 12, information for expressing the menu screen is read from the camera's ROM and transmitted to portable terminal 14 via wireless communication units 56 (of camera 12) and 68 (of terminal 14). *Id.* ¶ 83. Control unit 60 of portable terminal 14 analyzes the received information and uses it to display the menu screen on display unit 62. *Id.* The user can select a menu item by inputting a number assigned to that item using operating unit 64 of portable terminal 14. *Id.* ¶¶ 84, 85,

Fig. 4A (steps 206, 208). Control unit 60 transmits the user's selection to digital still camera 12, where it is processed by control unit 52. *Id.* ¶¶ 84, 85 (Figs. 4B–4D).

Figures 6E, 6F, and 6H of Iida are reproduced below.

FIG. 6E

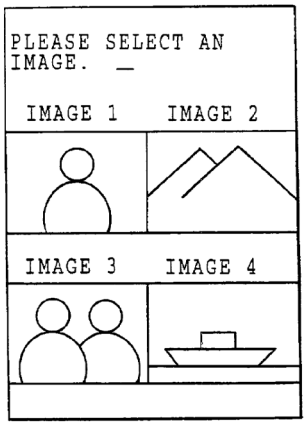

FIG. 6F

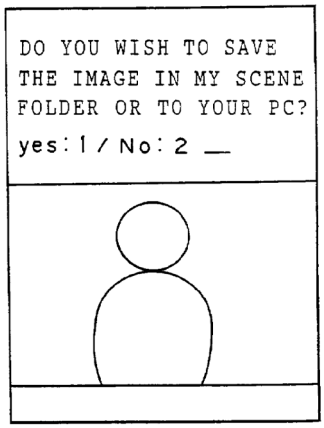

FIG. 6H

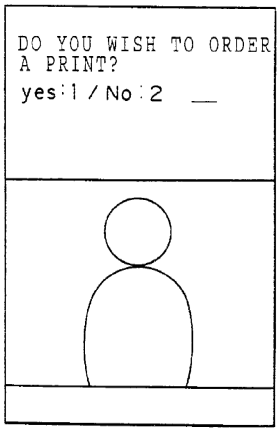

Iida Figures 6E, 6F, and 6H show menu screens for allowing a user to select, save, and order prints of photographed images. Ex. 1003 ¶¶ 93–107, 126–138. From the menu screen in Figure 6A, the user can select the menu item "Check a photographed image" or the menu item "Browse My Scene Folder." *Id.* ¶¶ 83, 93, 126. When either of these menu items is selected, a plurality of numbered photographed images is displayed on display unit 62 of portable terminal 14 to create an image selection screen, as shown in Figure 6E. *Id.* ¶¶ 93–96, 126–128, Fig. 4C (step 232), Fig. 4D (steps 254–262). Using operating unit 64, the user may input an instruction for scrolling (changing-over) the image selection screen to display additional images. *Id.* ¶¶ 97, 98, 130, 131. From the image selection screen, the user may select one of the images by inputting its number using operating unit 64, and the selected image is then enlarged and displayed on an image

check screen (Figure 6F) or a browse screen (Figure 6H). *Id.* ¶¶ 94, 96, 97, 99, 100, 130–133, Fig. 4C (step 236), Fig. 4D (step 266). From the image check screen (Figure 6F), the user may select whether to save the displayed image. *Id.* ¶¶ 99, 101–107, Fig. 4C (steps 238–250). From the browse screen (Figure 6H), the user may select whether to order prints of the displayed image. *Id.* ¶¶ 132, 135–138, Fig. 4D (steps 268–276).

Iida discloses that a user may elect to have a photographed image saved either to a PC possessed by the user or to a folder dedicated to the user, referred to as "My Scene Folder," in an image data saving area of storage medium 88 associated with image server 18. Ex. 1003 ¶¶ 76, 99, 101, 105, 106, Figs. 1C, 4C (step 241), 6F. If "My Scene Folder" has been designated as the save destination for the image, the photographed image data are transferred to image server 18 via portable terminal 14, a specified access point, and the Internet. *Id.* ¶¶ 107, 113, 114, Fig. 4C (steps 242, 244, 246).

2. Independent Claims 55, 78, 93, and 104

a) Undisputed claim elements

Petitioner contends, and Patent Owner does not dispute, that the following claim elements are taught by the following components disclosed in Iida:

Claim element	**Iida (Ex. 1003)**	**Citation**
portable device	digital still camera 12, Fig. 1A, ¶ 57	Pet. 13
portable device processor	control unit 52, which includes a CPU, Fig. 1A, ¶ 65	Pet. 14
portable device memory	ROM of control unit 52 and built-in memory 48, Fig. 1A, ¶ 63	Pet. 14

Claim element	Iida (Ex. 1003)	Citation
external communication interface	wireless communication unit 56, Fig. 1A, ¶ 66	Pet. 15
terminal	portable terminal 14, Fig. 1B, ¶ 57	Pet. 14–15
terminal processor	control unit 60, which includes a CPU, Fig. 1B, ¶ 68	Pet. 16
input component	operating unit 64 comprising a ten-keys, touch pad, or the like, Fig. 1B, ¶ 68	Pet. 16
output component	display unit 62, Fig. 1B, ¶ 68	Pet. 16
network communication interface	wireless communication unit 66, Fig. 1B, ¶ 68	Pet. 16–17
[terminal] memory	control unit 60, which includes a ROM and a RAM, Fig. 1B, ¶ 68	Pet. 16
communications network node	image server 18, Fig. 1C, ¶ 57	Pet. 19

The above chart was provided in the Institution Decision and is not challenged by either party. Inst. Dec. 31. We adopt this chart as part of our findings in this Final Written Decision.

b) First program code

The following limitation ("first program code" limitation) is recited in each of claims 55, 93, and 104:

> first program code which, when executed by the terminal processor, is configured to affect the presentation of an interactive user interface by the terminal output component.

Ex. 1001, 36:9–12, 39:64–67, 41:4–7.

Petitioner contends that Iida discloses the "first program code" limitation. Pet. 17–18, 30. Specifically, Petitioner contends:

> Iida discloses that this function is performed by code stored on terminal 14. Ex. 1003, [0068]. Camera 12 is not provided with a display and instead uses the terminal's display unit 62 to show images and provide interactive user interfaces. *See, e.g.*, Ex. 1003, [0059], [0082], [0083], [0095], [0099]. Control unit 52 instructs unit 56 to transmit information to terminal 14. After information is received, "<u>the control unit 60</u> of the portable terminal 14 analyzes the contents of the received information and <u>executes a process</u> corresponding to a result of the analysis. In this case, the <u>control unit 60</u> judges the received information to be information for displaying a screen on the display unit 62, and <u>it displays the menu screen on the display unit 62</u> by using the received information . . . the menu screen . . . displays as choices . . . which the user can select to be executed." Ex. 1003, [0083] (emphasis added).

Pet. 17–18 (citing Ex. 1027 ¶ 65). Petitioner additionally contends:

> It would have been understood by a POSITA that the ROM of control unit 60 holds the software (first program code) to be executed by the CPU for performing these functions of terminal 14. Accordingly, the (first) program code stored on control unit 60 of terminal 14 affects the presentation of an interactive user interface by display unit 62, as recited in the preamble to claim 55.

Pet. 18 (citing Ex. 1027 ¶ 65).

Patent Owner argues that Iida does not teach "affect[ing] the presentation of an interactive user interface . . . ." PO Resp. 32–35.

After considering the parties' arguments and evidence, we are persuaded by Petitioner's analysis of the "first program code" limitation. Pet. 17–18 (quoting Ex. 1003 ¶ 83). Petitioner shows persuasively that "first program code" corresponds to a process executed by Iida's control unit 60 of portable terminal 14. *Id.* That process involves judging whether received information is information for displaying a screen on display unit 62 and displaying a menu screen on the display unit. Ex. 1003 ¶ 83. We agree with

Petitioner that these actions disclose "affect[ing] the presentation of an interactive user interface by the terminal output component," as recited in the claims.

Patent Owner argues that Iida's menu screens are dictated by the camera, and the terminal has no influence on and does not alter the content or arrangement of the images or text displayed. PO Resp. 33. According to Patent Owner, "there are only two possible outcomes to [Iida's] process of 'judg[ing] the received information'—either the incoming information is for displaying a screen on the display unit, or it is not—and neither involves altering what is displayed." *Id.* at 34. Petitioner counters that processing information to produce a signal capable of being interpreted by a terminal's particular display, as taught by Iida, is "affecting the presentation" of the IUI. Pet. Reply 9–10.

On the present record, we find that Petitioner's argument is more persuasive than Patent Owner's. Iida's disclosure of judging whether received information is a menu screen that is meant to be displayed and then displaying a menu screen on a display unit is sufficient to teach "affecting the presentation" of the menu screens. Ex. 1003 ¶ 83. There is no requirement in the challenged claims that the terminal has any greater degree of influence on the content or arrangement of the images or text that are displayed by the terminal output component than is apparent from Iida's disclosure. *Id*.

We find that Iida teaches that the terminal affects the presentation of an IUI to the same degree as taught by the written description of the '703 Patent. Patent Owner and its expert identify login screen 205a as an example of an IUI in the '703 Patent. PO Sur-reply 4; Ex. 1046,

52:11–54:22 (Dr. Butler's testimony regarding text of '047 Patent (Ex. 1022) corresponding to Ex. 1001, 7:13–19). Dr. Butler testifies that the code for presenting login screen 205a "resides on the TCAP, but the actual user interface display is executed by the access terminal." Ex. 1046, 54:8–9. The same arrangement is taught by Iida paragraph 83. The code for presenting Iida's menu screens resides on the camera (Iida's portable device), but the actual interface display is executed by Iida's terminal 14. Ex. 1003 ¶ 83. Patent Owner does not direct us to support in the claims or elsewhere in the '703 Patent that "affecting the presentation" requires that program code on the terminal influences or alters the content or arrangement of images or text displayed on login screen 205a or any other IUI presented on the terminal output component.

For these reasons, we find that Petitioner has shown by a preponderance of the evidence that Iida discloses the "first program code" limitation of claims 55, 93, and 104.[10]

c) Second program code

The following limitation ("second program code" limitation) is recited in each of claims 55, 78, 93, and 104:

> [first/second] program code which, when executed by the terminal processor, is configured to provide a communications node on the terminal to facilitate communications to the portable device and to a communications network node through the terminal network communication interface.

Ex. 1001, 36:12–16, 38:24–28, 39:67–40:4, 41:7–10.

---

[10] We address the parties' dispute about whether Iida's menu screens disclose an IUI when addressing the "fourth program code" limitation in Section II.D.2.f below.

Petitioner contends that Iida discloses the "second program code" limitation. Pet. 19–21, 30–31. Specifically, Petitioner contends:

> Iida discloses that terminal control unit 60 is configured to establish terminal 14 as a node on a Bluetooth or HomeRF network through the second wireless communication unit 68 on terminal 14 to facilitate communications with camera 12. Ex. 1003, [0069] ("the second wireless communication unit 68, which performs wireless communication via the antenna 80 with the digital still camera 12").
>
> Terminal 14 is further established as a node on a wireless network through first wireless communication unit 66 so that it can communicate via antenna 78 with and through base station 84 under the control of control unit 60. . . . Because Iida describes communications between terminal 14 and each of camera 12 and image server 18, a POSITA would have understood that the CPU of control unit 60 performs the foregoing control unit functions by executing code to establish terminal 14 as a node on each of the respective networks. For example, control unit 60 would establish terminal 14 as a node by sending initialization configuration information to unit 66 or unit 68. . . . A terminal performing the functions of facilitating communications with camera 12 and over a network with image server 18 would have been understood by a POSITA to have corresponding code (second program code) stored in memory on the CPU of control unit 60.

Pet. 19–20 (citing Ex. 1027 ¶ 68).

Patent Owner argues that "Iida is silent regarding any program code that might be used to provide a communications node on either the portable apparatus or the camera." PO Resp. 45. Patent Owner argues that Petitioner improperly relies on Iida's portable apparatus 14 as teaching two separate claim elements—the "terminal" and the "communications node on the terminal." *Id.* at 45–46. In addition, Patent Owner relies on its proposed

construction for "through the terminal network communication interface" to argue that this limitation is not taught by Iida. *Id.* at 42–44.

After considering the parties' arguments and evidence, we are persuaded by Petitioner's analysis of the "second program code" limitation. We credit Mr. Geier's testimony that a POSITA would have understood from Iida that "control unit 60 executes code 'to provide a communications node on the terminal to facilitate communications to the portable device and to a communications network node through the terminal network communication interface,'" as recited in the claims. Ex. 1027 ¶ 68 (quoting, e.g., Ex. 1001, 36:12–16). Mr. Geier provides reasoned technical analysis supporting his opinion. *Id.* For example, Mr. Geier testifies that "in Iida's terminal 14, the control unit 60 would execute code to establish the terminal as a node on the network by sending initialization/configuration information to one of its communication units 66 or 68." *Id.* (citing Ex. 1003, Fig. 1B).

Mr. Geier's testimony is consistent with the legal standard for anticipation. *AstraZeneca*, 633 F.3d at 1055 (dispositive question regarding anticipation is whether one skilled in the art would reasonably understand or infer from a prior art reference that every claim element is disclosed in that reference); *see also Arthrocare Corp. v. Smith & Nephew, Inc.*, 406 F.3d 1365, 1373–74 (Fed. Cir. 2005) (holding claim anticipated and relying on expert testimony that a person of ordinary skill in the art would understand that embodiment disclosed in reference meets claim limitation).

Dr. Butler does not directly challenge Mr. Geier's testimony concerning how a POSITA would have understood Iida's disclosure. Instead, Patent Owner and Dr. Butler fault Petitioner and Mr. Geier for not identifying an express disclosure of node-establishing program code in Iida.

PO Resp. 45–46; Ex. 2003 ¶ 61; Ex. 2139 ¶ 116. We find that Patent Owner and Dr. Butler do not apply the correct legal test for anticipation. *In re Gleave*, 560 F.3d 1331, 1334 (Fed. Cir. 2009) (to anticipate, "the reference need not satisfy an *ipsissimis verbis* test").

We disagree with Patent Owner's characterization that Petitioner relies on Iida's portable terminal 14 for two separate claim elements—the terminal and the communications node on the terminal. PO Resp. 45–46; Ex. 2139 ¶¶ 117, 118. For these claim elements, Petitioner and Mr. Geier identify two distinct components in the prior art: (1) Iida's portable terminal 14; and (2) program code that a POSITA would have understood as being executed by Iida's control unit 60. Pet. 19–20; Ex. 1027 ¶ 68. Petitioner's arguments and evidence thus comply with applicable case law and claim requirements. *See Becton, Dickinson & Co. v. Tyco Healthcare Group, LP*, 616 F.3d 1249, 1254 (Fed. Cir. 2010) ("Where a claim lists elements separately, 'the clear implication of the claim language' is that those elements are 'distinct component[s]' of the patented invention" (quoting *Gaus v. Conair Corp.*, 363 F.3d 1284, 1288 (Fed. Cir. 2004))).

We are persuaded by Petitioner's analysis of the claim requirement for communications "through the terminal network communication interface" to a communications network node. Pet. 19–20. We agree with Petitioner that this limitation is found in Iida's disclosure of communications from terminal 14 to image server 18 "through first wireless communication unit 66." *Id*. Petitioner's contention is supported by the cited evidence. Ex. 1003 ¶¶ 14, 69, 70; Ex. 1027 ¶¶ 66, 68.

Patent Owner argues that Iida does not teach communications "through the terminal network communication interface" because Iida's

terminal is not prevented from accessing images sent through the terminal. PO Resp. 42–44. Patent Owner's argument is based on a claim construction we decline to adopt. For the reasons discussed above, we do not construe the phrase, "through the terminal network communication interface," as requiring that communications through the terminal be inaccessible to the terminal. *See* Section II.C.2.

For these reasons, we find that Petitioner has shown by a preponderance of the evidence that Iida discloses the "second program code" limitation of claims 55, 78, 93, and 104.

d) Affect[ing] the presentation of an IUI

The following limitations are recited in the claims:

> [causing/cause] the terminal to execute the first program code to affect the presentation of an interactive user interface by the terminal output component;

Ex. 1001, 36:18–20, 41:19–21 (claims 55 and 104);

> affecting the presentation of [an/the] interactive user interface [presented] by the terminal output component.

Id. at 38:30–31, 40:6–7 (claims 78 and 93).

Petitioner contends that Iida discloses the above-quoted limitations. Pet. 21–22, 27–30 (citing Ex. 1003 ¶¶ 83–85, Fig. 4A, among other portions). According to Petitioner, in step 204, Iida's "camera 12 sends a menu screen to the terminal causing the terminal to display an interactive user interface." Pet. 21. Referring to its analysis of the "first program code" limitation, Petitioner contends that Iida's "control unit 60 in the terminal respond[s] by analyzing the contents of information received from control unit 52 of camera 12 and executes a process corresponding to a result of the analysis." Pet. 21–22. Petitioner relies on Iida's disclosure that "the control

unit 60 [of terminal 14] judges the received information [from control unit 52] to be information for displaying a screen on the display unit 62, and it displays the menu screen on the display unit 62 by using the received information." Pet. 22 (quoting Ex. 1003 ¶ 83 (bracketed additions are Petitioner's)).

Patent Owner argues that the above-quoted limitations are not disclosed by Iida, relying on the same arguments as it presents for the "first program code" limitation. PO Resp. 32–35.

After considering the parties' arguments and evidence, we are persuaded by Petitioner's analysis of the above-quoted limitations for the same reasons as discussed above for the "first program code" limitation. *See* Section II.D.2.b. We rely in particular on the portion of Iida paragraph 83 quoted by Petitioner. Pet. 22 (quoting Ex. 1003 ¶ 83). Accordingly, we find that Petitioner has shown by a preponderance of the evidence that Iida discloses the above-quoted limitations of claims 55, 78, 93, and 104.[11]

e) Third program code

The following limitation ("third program code" limitation) is recited in each of claims 55, 78, 93, and 104:

> [executing/execute] [second/third] program code stored on the portable device memory to provide a communications node on the portable device configured to coordinate with the communications node on the terminal and establish a communications link between the portable device and the terminal, and to facilitate communications to the terminal and

[11] We address the parties' dispute about whether Iida's menu screens disclose an IUI when addressing the "fourth program code" limitation in Section II.D.2.f below.

> to a communications network node through the terminal network communication interface.

Ex. 1001, 36:21–28, 38:33–39, 40:8–15, 41:22–30.

Petitioner contends that Iida discloses the "third program code" limitation. Pet. 22–23, 27–29, 32. Specifically, Petitioner contends:

> As stated in Paragraph [0066], wireless communication unit 56 on camera 12 is connected to bus 50. Antenna 58 on camera 12 is connected to wireless communication unit 56 for performing wireless communication through antenna 58 with portable terminal 14 via Bluetooth or Home RF. It is control unit 52 in camera 12 (the portable device) which reads from the ROM or the like information and outputs the information to wireless communications unit 56 and instructs unit 56 to transmit the information to portable terminal 14. Ex. 1003, [0083]. A POSITA would have understood Iida to disclose that camera 12 includes code in ROM or RAM that is executed for establishing camera 12 as a node in Bluetooth or HomeRF to coordinate communications and establish a link with unit 68 of terminal 14. . . . Thus, executing code (third program code) stored on control unit 52 of camera 12 provides a communication node on the camera 12 to coordinate communications with the communication node on the terminal and establish a communication link therebetween.

Pet. 22–23 (citing Ex. 1027 ¶¶ 73, 74).

Patent Owner argues that the "third program code" limitation is not disclosed by Iida, relying on the same arguments as it presents for the "second program code" limitation. PO Resp. 45–46.

After considering the parties' arguments and evidence, we are persuaded by Petitioner's analysis of the "third program code" limitation. We credit Mr. Geier's testimony that "control unit 52 of camera 12 provides a communications node on camera 12 to coordinate communications with a communications node on the terminal and establish a communications link."

Ex. 1027 ¶ 73 (citing Ex. 1003 ¶¶ 66, 83, 110, 113, Fig. 4C). We find that Mr. Geier's testimony is supported by the cited portions of Iida. *Id.*

We have considered Patent Owner's arguments and Dr. Butler's testimony (PO Resp. 42–46; Ex. 2003 ¶ 61; Ex. 2139 ¶¶ 110–118) and find them insufficient to rebut Petitioner's showing for the reasons as discussed above with respect to the "second program code" limitation. *See* Section II.D.2.c.

Accordingly, we find that Petitioner has shown by a preponderance of the evidence that Iida discloses the "third program code" limitation.

f) Fourth program code

The following limitations (collectively, "fourth program code" limitation) are recited in the claims:

> executing, in response to a communication received by the portable device resulting from user interaction with the interactive user interface, [third/fourth] program code stored on the portable device memory to cause a communication to be transmitted to a communications network node;

Ex. 1001, 36:29–34, 38:40–45, 40:17–22 (claims 55, 78, 93);

> execute fourth program code stored on the portable device memory in response to a communication received by the portable device resulting from user interaction with the interactive user interface to cause a communication to be transmitted to a communications network node.

Id. at 41:31–36 (claim 104).

Petitioner contends that Iida discloses an IUI and the "fourth program code" limitation. Pet. 18, 23–26, 28–29, 32–33. Specifically, regarding an IUI, Petitioner contends:

> Via the operating unit 64 of terminal 14, the user inputs a number which is assigned to any of the processes displayed on the menu screen, and this inputted number is then transmitted to

> camera 12. Iida Figures 4B–4D disclose the presentation of the menu screens shown in Figures 6A–6I. *See* Ex. 1003, Fig. 4A (step 204), Fig. 4B (step 210), Fig. 4C (step 232), Fig. 4D (step 262). The menu screens are interactive user interfaces because the user interacts with the screens by selecting one of the displayed choices and that selection determines what happens next.

Pet. 18 (citing Ex. 1027 ¶ 65).

Addressing the "fourth program code" limitation, Petitioner identifies two ways that Iida discloses user interaction with an IUI. Pet. 23–24. First, Petitioner asserts that, in Iida, "[a] user selects a photographic image displayed on a menu screen on display unit 62 and inputs the number of that photograph via unit 64" and "the selected photographed image data is displayed on unit 62." *Id.* (citing Ex. 1003 ¶¶ 84, 85, 95, Figs. 4A, 4C (steps 206, 208, 232)). Second, Petitioner asserts that, in Iida, "a user may select an image to be saved in image server 18 by inputting the affixed number via unit 64." Pet. 24 (citing Ex. 1003 ¶ 97).

Petitioner contends that Iida discloses executing "fourth program code stored on the portable device memory in response to a communication received by the portable device resulting from user interaction with the interactive user interface." Ex. 1001, 36:31–34. According to Petitioner, "program code stored on camera 12 is executed in response to communications received by camera 12 from terminal 14 (the input numbers selected by the user) which resulted from the user interacting with menus displayed on unit 62 (the interactive user interface)." Pet. 24–25 (citing Ex. 1027 ¶ 76).

Addressing the "fourth program code" limitation, Petitioner identifies three examples in Iida of a communication that is caused to be transmitted to

a communications network node. Pet. 24–25 (citing Ex. 1027 ¶ 76). First, Petitioner identifies Iida's log-in processing step 244, which includes dialing access point 86 and transmitting a user ID and password to image server 18. Pet. 24 (citing Ex. 1003 ¶¶ 110, 113, Fig. 4C, step 244). Second, Petitioner identifies Iida's image data transfer step 246, which includes transferring selected photographed image data to image server 18. Pet. 25 (citing Ex. 1003 ¶ 114, Fig. 4C, step 246). Third, Petitioner identifies Iida's log-in processing step 256, which (like step 244) includes dialing access point 86 and transmitting a user ID and password to image server 18. *Id.* (citing Ex. 1003 ¶ 127, Fig. 4D, step 256).

Patent Owner disputes Petitioner's contentions that Iida discloses an IUI and user interaction with an IUI. PO Resp. 31–32, 36–41.

After considering the parties' arguments and evidence, we are persuaded by Petitioner's analysis of the "fourth program code" limitation for the following reasons.

As discussed above, we construe "interactive user interface" to mean "a display containing interface elements with which a user may interact to result in a computer taking action responsively." *See* Section II.C.1. Applying this construction, we find that Petitioner has shown that Iida discloses an IUI in the form of menu screens, as illustrated in Figures 6A–6I. Pet. 18; Ex. 1003, Figs. 6A–I. Iida discloses that these menu screens are displayed on display unit 62 of terminal 14. Ex. 1003 ¶¶ 82, 83. There is no dispute that Iida's menu screens are a "display," as set forth in our claim construction.

We agree with Petitioner that Iida's menu screens are "interface elements" within the meaning of the '703 Patent and our claim construction.

Pet. Reply 11 (responding to Patent Owner's argument). As noted by Petitioner, the '703 Patent expressly discloses "menus" as an example of "[c]omputer interaction interface elements." *Id.* (quoting Ex. 1001, 1:57–58). We find that each of Iida's menu screens that provides choices for the user to select (i.e., Iida Figures 6A–C, 6E, 6F, 6H, and 6I) discloses an "interface element" and that these menu screens collectively disclose an IUI within the meaning of our claim construction and the '703 Patent claims.

We credit Mr. Geier's testimony that Iida's "menu screens are interactive user interfaces because the user interacts with the screen by selecting one of the displayed choices and that selection determines what happens next." Ex. 1027 ¶ 65. Mr. Geier explains persuasively that "[t]he menu screen is an interactive user interface, . . . and this is evidenced by step 206 of [Iida] Figure 4A, where it is determined whether any process has been selected by the user, and step 208, where is determined which of the choices displayed on the menu screen has been selected." *Id.* ¶ 72. Mr. Geier's testimony is supported by Iida's disclosure, including Figures 6A–C, 6E, 6F, 6H, and 6I, which are menu screens that display choices the user can select to be executed, and Figures 4A–4D, which are flow charts that include steps for displaying user choices and processing steps that depend on the user's input. Ex. 1003 ¶¶ 82–85, 95, 99, 128, 132, Figs. 4A–4D (steps 204, 206, 208, 210, 232, 236, 262, 266, 278); Figs. 6A–C, 6E, 6F, 6H, and 6I.

We find that each of Iida's menu screens (Figures 6A–C, 6E, 6F, 6H, and 6I) is an interface element with which a user may interact, as set forth in our claim construction. Each of these menu screens prompts the user to

interact with the menu screen by selecting one of the displayed choices or by entering information requested by the menu screen. *Id.*

Figure 6A, for example, is reproduced below:

FIG. 6A

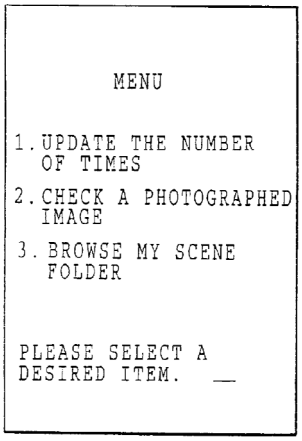

Iida Figure 6A shows a menu screen that includes three numbered choices: "1. Update the number of times," "2. Check a photographed image," and "3. Browse my scene folder." Ex. 1003 ¶ 83, Fig. 6A. At the bottom of the menu screen, the user is prompted to "Please select a desired item." *Id.* Fig. 6A. According to Iida, the user may input, via operating unit 64 of terminal 14, a number corresponding to one of the choices displayed on the menu screen, and the routine proceeds to one of several branches of processing in accordance with the user's selection. *Id.* ¶¶ 84, 85; *see also* Ex. 1027 ¶¶ 65, 72 (Mr. Geier relies on this disclosure to support his opinion that Iida's menu screens are IUIs). We find that the user is interacting with Iida's menu screen when the user inputs a number corresponding to one of several choices displayed on the menu screen, and that choice determines how the computer-implemented process will proceed. Ex. 1003 ¶¶ 84, 85; Ex. 1027 ¶¶ 65, 72.

We are persuaded by Mr. Geier's opinion that Iida's menu screens are IUIs for two additional reasons. First, Iida's menu screens prompt the user for input, and the meaning of the user's input is determined by what is displayed on the menu screen. For example, the numeral "1" has a different meaning when input in response to Figure 6A than it does when input in response to Figure 6E. *See* Ex. 1003 ¶¶ 83, 85, 95, 99. To us, this means that, when the user inputs the numeral "1", the user is interacting with the menu screen. *See* Pet. Reply 8.

Second, Iida's menu screens provide feedback to the user by changing what is displayed in response to user input. For example, if in response to Figure 6A the user inputs numeral "1" ("Update the number of times"), then the menu screen in Figure 6B is displayed. Ex. 1003 ¶¶ 83–85. If, on the other hand, the user inputs numeral "2" ("Check a photographed image"), then the menu screen in Figure 6E is displayed. *Id.* ¶¶ 93–95. To us, this means that, when the user inputs a numeral, the user is interacting with the menu screen. *See* Pet. Reply 7–8.

These attributes of Iida's menu screens support our finding that Iida discloses IUIs within the meaning of our claim construction and the '703 Patent. These attributes also support our finding that user selection of a menu choice by inputting a number displayed on the menu screen, as taught by Iida (Ex. 1003 ¶¶ 84, 97, Figs. 6A–C, 6E, 6F, 6H, and 6I), discloses "user interaction with the interactive user interface," as recited in the "fourth program code" limitation of the challenged claims.

Patent Owner relies on a preliminary finding in our Institution Decision in IPR2019-00416 to argue that Iida teaches user interaction with a numeric keyboard, rather than user interaction with a display, as required by

the parties' claim constructions for IUI. PO Resp. 31–32 (citing IPR2019-00416, Paper 20 at 79). Based on the complete record in this case—as opposed to the preliminary record in IPR2019-00416—we determine that the preliminary finding relied upon by Patent Owner is incorrect. For the reasons discussed above, we find that Petitioner has shown that Iida discloses user interaction with an IUI. Iida discloses that a user may input, e.g., via a keypad, a number corresponding to one of the choices displayed on a menu screen. Ex. 1003 ¶¶ 68, 83, 84, Fig. 6A. By inputting a number displayed on the menu screen, the user is not merely interacting with the keypad, the user is interacting with the menu screen. As disclosed by Iida, the number corresponds to a choice displayed on the menu screen, and the user's selection determines which menu screen is displayed next. *See, e.g.*, *id*. ¶ 85 ("it is determined which of the choices displayed on the menu screen has been selected"); *id*. ¶¶ 93–95 (if the user selects the menu option "Check a photographed image," then an index of images is displayed, as shown in Figure 6E).

Patent Owner argues that Iida does not disclose an IUI because "Iida teaches individual static images, not an IUI." PO Resp. 36. We disagree. For the reasons explained above, Iida's menu screens, when viewed collectively, disclose an IUI within the meaning of our claim construction and the '703 Patent. Nothing in our claim construction for IUI excludes a series of menu screens with which a user may interact by selecting options presented on the menu screens.

Next, Patent Owner argues that "Iida does not teach interaction interface elements." PO Resp. 37. We disagree. As discussed above, each of Iida menu screens corresponds to an "interface element" within the

meaning of our claim construction. "Menus" are identified as "[c]omputer interaction interface elements" in the '703 Patent, without limiting the scope of such menus those that "unfurl to present options," as discussed elsewhere in the patent. Ex. 1001, 1:57–62, 9:58–61. Furthermore, user input devices for engaging the user interface in the '703 Patent include a "keyboard"—the same type of user input device for engaging the user interface in Iida. *Id.* at 15:45–48, 22:39–42; Ex. 1003 ¶¶ 68, 84.

According to Patent Owner, "[t]he simple keypad operation of Iida is unlike IUIs as understood at the time." PO Resp. 37 (citing Ex. 2100,[12] 4–6, 9). Patent Owner's argument is not supported by the parties' proposed constructions for IUI, nor the claim construction we adopt here. *See* Section II.C.1. Although Patent Owner argues that Iida lacks features such as "a mouse and pointer, a touch-screen, or other two-dimensional device," "drag-and-drop operation," "movement . . . of the user's point of interaction with the display," "clickable elements, checkboxes, or pointer events," and "positional feedback" (PO Resp. 38 (emphasis omitted); PO Sur-reply 9), none of these features is required by our claim construction for IUI or any of the claim constructions proposed by the parties.

Patent Owner's evidence—the Shaw article—does not support its arguments. Shaw distinguishes interactive interfaces from conventional batch systems based on the relative timing of the input and output and the system's ability to provide feedback to the user.[13] The type of user input

---

[12] Shaw, Mary, *An Input-Output Model for Interactive Systems*, Conference on Human Factors in Computing Systems (April 1986) (the "Shaw article").

[13] *See, e.g.,* Ex. 2100, 1 ("Interactive input and output are fundamentally different from conventional implementations of input and output in two

device (keyboard versus a mouse and pointer or touch screen) and movement of the user's point of interaction are not identified as distinguishing features of an IUI. Ex. 2100, 9, 11 (discussing a keyboard as a device for providing interactive input). Iida's menu screens are consistent with Shaw's description of an interactive system because, in Iida, the user's input of a number results in feedback to the user, namely a change in the menu screen on the display. *Compare, e.g.*, Ex. 1003 ¶¶ 85, 93–95, Figs. 6A, 6E (number input by the user corresponds to a choice displayed on menu screen, and the user's selection determines which menu screen is displayed next), *with* Ex. 2100, 5 ("*Interactive input*: Interactive sy[s]tems must provide feedback to the user while he or she supplies input actions. In addition, input operations may refer to information that is currently displayed on the terminal.").

Next, Patent Owner argues that Iida does not disclose an IUI because "Iida does not teach the terminal taking action responsively by responding to the user." PO Resp. 39–42. Patent Owner bases this argument on its construction for IUI, which identifies the terminal as the computer that takes action responsively and responds to the user. *Id.* For the reasons discussed above, we do not adopt this aspect of Patent Owner's claim construction.

---

ways: [1] The output device serves as a continuous sensor or observer of the application software and provides current information about the state of the computation, whereas conventional input and output provides information to the human user only when the application software chooses to report. [2] Input is an interactive process requiring feedback (sometimes from the application software that will receive the input), whereas input is conventionally treated as a simple parsing task. Moreover, interactive input is often under control of the human user rather than the program, yielding an event-driven system rather than a program-driven one.").

See Section II.C.1. We determine that the term IUI, as used in the '703 Patent, is broad enough to encompass responsive action by ***either or both*** the terminal and the portable device. *Id.* Patent Owner does not dispute that Iida discloses that the portable device—Iida's camera—takes action responsively by responding to the user. *See* PO Resp. 39 ("[I]n Iida it is the camera—not the terminal—that analyzes the key-press information, determines what action to take, and responds to the user."). That disclosure in Iida satisfies our construction for IUI.

Patent Owner does not dispute that Iida discloses the remaining limitations of the "fourth program code" limitation, i.e., executing fourth program code stored on the portable device memory in response to a communication received by the portable device to cause a communication to be transmitted to a communications network node. Ex. 1001, 36:18–20, 38:30–31, 40:6–7, 41:19–21. We find that Petitioner has shown that these limitations are met. Pet. 24–25 (citing Ex. 1003 ¶¶ 110, 113, 114, 127, Figs. 4C, 4D (steps 244, 246, 256).

For these reasons, we find that Petitioner has shown by a preponderance of the evidence that Iida discloses an IUI and the "fourth program code" limitation of claims 55, 78, 93, and 104.

g) Facilitating communications

The following limitation is recited in each of claims 55, 78, 93, and 104:

> [facilitate/facilitating] communications through the terminal network communication interface to a communications network node.

Ex. 1001, 36:35–37, 38:46–48, 40:23–25, 41:37–39.

Petitioner contends that the above-quoted limitation is disclosed by Iida. Pet. 26–29, 33. Specifically, Petitioner contends:

> In step 244, control unit 52 of camera 12 causes terminal 14 to dial by unit 66 an access point to secure a communication line between terminal 14 and image server 18 and then performs authentication of the user ID and password stored in memory 48. Likewise, in step 256, an access point is dialed and a user ID and password are transmitted to secure a communication line between terminal 14 and image server 18. These steps facilitate communication with image server 18 through terminal 14 and communications unit 66.

Pet. 26–27.

Patent Owner does not dispute Petitioner's contention, other than by presenting an argument based on its proposed construction for "through the terminal network communication interface." PO Resp. 42–44.

After considering the parties' arguments and evidence, we are persuaded by Petitioner's analysis of the above-quoted limitation. Pet. 26–27, 33 (citing Ex. 1003 ¶¶ 110, 113, 127, Figs. 4C, 4D (steps 244, 256); Ex. 1027 ¶ 77). Patent Owner's argument is not persuasive because we do not construe "though the terminal network interface" as requiring that the information communicated is not accessible to the terminal. *See* Section II.C.2. Accordingly, we find that Petitioner has shown by a preponderance of the evidence that Iida discloses the above-quoted limitation of claims 55, 78, 93, and 104.

3. Dependent Claims 56, 75, 90, 101, 105, and 124

Claim 56 depends from claim 55 and recites, "wherein the step of executing fourth program code stored on the portable device memory causes a communication to be transmitted to the communications network node to facilitate ***verification of the portable device***." Ex. 1001, 36:38–42

(emphasis added). Claim 105 depends from claim 104 and recites, "wherein the portable device is configured to execute the fourth program code to cause a communication to be transmitted to the communications network node to facilitate ***verification of the portable device***." *Id.* at 41:40–44 (emphasis added). Dependent claims 75, 90, 101, and 124 each recite that "the data stored on the portable device memory comprises ***portable device identifier information***." *See, e.g.*, *id.* at 38:1–3 (emphasis added).

Regarding claims 56 and 105, Petitioner contends that "[t]he transmission of the user ID and password [to image server 18] in step 244 of Iida facilitates verification of camera 12 since the user ID is associated with a specific camera." Pet. 34 (citing Ex. 1003 ¶¶ 75, 113; Ex. 1027 ¶ 101). Regarding claims 75 and 124, Petitioner contends "[b]ecause the user ID is associated with a specific camera 12, the user ID data stored on the portable device memory comprises portable device identifier information." Pet. 44 (citing Ex. 1003 ¶¶ 75, 113); *see also* Pet. 52 (similar contention for claims 90 and 101, citing Ex. 1003 ¶¶ 57, 110, 113).

In the Institution Decision, we determined:

> Petitioner's evidence is not sufficient to support its contentions regarding anticipation of dependent claims 56, 75, 90, 101, 105, and 124. Petitioner does not show sufficiently that the user ID and password in Iida are associated with the portable device (camera 12), as opposed to the user who rents the camera. Ex. 1003 ¶ 75 ("the shop affords a user ID to the user").

Dec. 38. Patent Owner argues that our determination is correct, arguing that in Iida, "the user ID is associated only with the current user, not with the camera itself" and is therefore not a portable device identifier and cannot be

used for device-verification, as required by the claims. PO Resp. 47–48 (citing Ex. 1003 ¶ 75; Ex. 2003 ¶ 63).

Petitioner responds that "[s]ince the user ID and password are stored in the camera and not entered by the user, they identify and verify the camera" because "[t]he renter may hand the camera to anyone for use." Pet. Reply 16 (citing Ex. 1003 ¶ 125).

After considering the parties' arguments and evidence, we are not persuaded by Petitioner's analysis of claims 56, 75, 90, 101, 105, and 124. Iida discloses that camera 12 is rented to multiple users, one after the other, and that each time the camera is rented, the shop assigns a user ID to the user, writes it into the camera's memory, and communicates it to a company managing image server 18. Ex. 1003 ¶¶ 12, 57, 75, 76, 125. According to Iida, when the user elects to save an image to image server 18 (*id.* ¶¶ 99, 101, 105, 107), the user ID and password are transmitted to image server 18 and "the user renting the digital still camera 12 is authenticated by the image server 18 and is thereby able to use the service offered by the image server 18" (*id.* ¶ 113). Based on these disclosures, we agree with Patent Owner that Iida's user ID is associated with the current user of the camera, not the camera itself, and does not "facilitate verification of the portable device," nor serve as a "portable device identifier," as recited in dependent claims 56, 75, 90, 101, 105, and 124.

For these reasons, we find that Petitioner has not shown by a preponderance of the evidence that Iida discloses the additional limitations of claims 56, 75, 90, 101, 105, and 124.

4. Dependent Claims 61, 62, 110, and 111

Claim 61 depends from claim 55 and recites, "wherein the step of executing fourth program code stored on the portable device memory causes a communication to be transmitted to the communications network node to facilitate the ***download of program code*** from the communications network node to the terminal." Ex. 1001, 36:66–37:4 (emphasis added). Claim 62 is identical to claim 61, except that the download destination is "the portable device" instead of "the terminal." *Compare id.*, *with id.* at 37:5–10. Claim 110 depends from claim 104 and recites, "wherein the portable device is configured to execute the fourth program code to cause a communication to be transmitted to the communications network node to facilitate the ***download of program code*** from the communications network node to the terminal." *Id.* at 42:1–6 (emphasis added). Claim 111 is identical to claim 110, except that the download destination is "the portable device" instead of "the terminal." *Compare id.*, *with id.* at 42:7–12.

Petitioner contends that Iida discloses downloading content from image server 18 to terminal 14 and to camera 12. Pet. 36, 38 (citing Ex. 1003 ¶¶ 127, 128). Petitioner asserts that "[t]he only difference between program code and other content relates to the information content," which "is not entitled to patentable weight." Pet. 37. Relying on the printed matter doctrine, Petitioner argues that "[b]ecause program code serves no function in claims 61 and 110, it should be given no patentable weight." *Id.*; *see also* Pet. 38 (relying on the same argument for claims 62 and 111).

Patent Owner argues that Petitioner misapplies the printed matter doctrine when it equates the downloading of image data in Iida to the downloading of program code in the '703 Patent. PO Resp. 48–51.

After considering the parties' arguments and evidence, we determine that our analysis of claims 61, 62, 110, and 111 in the Institution Decision is correct and adopt it as part of the reasoning supporting this Final Written Decision. We repeat that analysis below.

> The Federal Circuit has established a two-step analysis for determining whether to give patentable weight to a limitation allegedly directed to printed matter. *In re DiStefano*, 808 F. 3d 845, 848–51 (Fed. Cir. 2015). "The first step . . . is the determination [whether] the limitation . . . is in fact directed toward printed matter." *Id.* at 848. Under the first step of the analysis, "a limitation is printed matter only if it claims the content of information." *Id.* In other words, printed matter is "matter claimed for its communicative content," i.e., "matter claimed for what it communicates." *Id.* at 849, 850.
>
> The second step of the analysis is to determine whether the printed matter is "functionally or structurally related to the physical substrate holding the printed matter." *DiStefano*, 808 F. 3d at 848 (quoting *In re Gulack*, 703 F.2d 1381, 1384–85 (Fed.Cir.1983)); *see also Praxair Distribution, Inc. v. Mallinckrodt Hospital Prods. IP Ltd.*, 890 F.3d 1024, 1032 (Fed. Cir. 2018) ("If a claim limitation is directed to printed matter, then the next step is to ascertain whether the printed matter is functionally related to its 'substrate.'").
>
> Here, the parties dispute whether the recitation of "program code" in claims 61, 62, 110, and 111 should be given patentable weight under the printed matter doctrine. After considering the parties' arguments and evidence and applying the two-step analysis of *DiStefano*, we agree with Petitioner that (1) the "program code" limitation of claims 61, 62, 110, and 111 is "printed matter" because it claims the content of the information that is downloaded, and (2) the claims do not recite any functional or structural relationship between the "program code" and its substrate, i.e., the communications network node, the terminal, or the portable device.
>
> We find it significant that claims 61, 62, 110, and 111 differ from claims 59, 60, 108, and 109, respectively, only in

> their characterization of what is downloaded. Whereas claims 59, 60, 108, and 109 recite that "content" is downloaded, claims 61, 62, 110, and 111 recite that "program code" is downloaded. This limited difference reinforces our conclusion that "program code" is matter claimed for its communicative content. *DiStefano*, 808 F.3d at 849. For these reasons, we determine that claims 61, 62, 110, and 111 cannot be distinguished from Iida merely because Iida discloses downloading information (image data) that differs in its communicative content from the information recited in the claims (program code).

Inst. Dec. 38–40.

Patent Owner disagrees with our determination that claims 61, 62, 110, and 111 do not recite a functional relationship between the program code and its substrate (Dec. 39), arguing, "the reasonable interpretation of these claims is that the downloaded code is intended to be executed by the portable device or the terminal referenced in the independent claims." PO Resp. 49 (emphasis omitted).

After considering the parties' arguments, we determine that the recitation of "program code" in claims 61, 62, 110, and 111 is nonfunctional printed matter that is not entitled to patentable weight. Patent Owner directs us to the '703 Patent's disclosure that "the TCAP may obtain updated interfaces and programs from a backend server for execution either on the TCAP itself and/or the AT." Ex. 1001, 9:53–56; PO Resp. 50; PO Sur-reply 18–19. Yet Patent Owner presents no persuasive argument for reading this disclosure from the Specification into the claims as a limitation, and we decline to do so. *In re Bigio*, 381 F.3d 1320, 1325 (Fed. Cir. 2004) ("[T]his court counsels the PTO to avoid the temptation to limit broad claim terms solely on the basis of specification passages.").

Even if we were to construe claims 61, 62, 110, and 111 as argued by Patent Owner (PO Resp. 49), we would still conclude that "program code," as recited in these claims, is nonfunctional printed matter. Merely assuming that the downloaded code is intended to be executed by the portable device or the terminal (*id.*) is not enough to establish a functional relationship between the program code and its substrate. Neither the claims nor the Specification excerpts cited by Patent Owner describe the function of the program code recited in claims 61, 62, 110, and 111. Even under Patent Owner's claim interpretation, the downloaded code is merely generic and has no functional relationship with either the portable device or the terminal.

Moreover, Patent Owner makes no argument that the downloading of content from image server 18 to terminal 14 and to camera 12, as disclosed in Iida (Ex. 1003 ¶¶ 127, 128), would need to be performed any differently if program code were downloaded instead of non-program code content. On this record, there is no persuasive evidence that the nature of the downloaded data functionally affects the downloading process or any other process recited in the claims. Under case law cited by both parties, the absence of such a functional effect demonstrates that "program code," as recited in claims 61, 62, 110, and 111, is nonfunctional descriptive material that is not entitled to patentable weight. *Ex Parte Nehls*, 88 USPQ2d 1883, 1888 (BPAI Jan. 28, 2008) (precedential) ("The specific SEQ ID NOs recited in the claims do not affect how the method of the prior art is performed—the method is carried out the same way regardless of which specific sequences are included in the database."). As in *Nehls*, "the nature of the information being manipulated does not lend patentability to an otherwise unpatentable computer-implemented product or process." *Id.* at 1889.

For these reasons, we find that Petitioner has shown by a preponderance of the evidence that Iida discloses the additional limitations of claims 61, 62, 110, and 111.

5. Dependent Claims 65 and 114

Claim 65 depends from claim 55 and recites, "wherein the step of executing fourth program code stored on the portable device memory causes a communication to be transmitted to the communications network node to facilitate ***synchronizing content*** on the portable device with content on the communications network node." Ex. 1001, 37:22–27 (emphasis added). Claim 114 depends from claim 104 and recites, "wherein the portable device is configured to execute the fourth program code to cause a communication to be transmitted to the communications network node to facilitate ***synchronizing content*** on the portable device with content on the communications network node." *Id.* at 42:24–29 (emphasis added).

Petitioner directs us to Iida's steps for saving image data, either to storage medium 88 of image server 18 or to memory 48 of camera 12, and Iida's step for erasing image data from image server 18. Pet. 39 (citing Ex. 1003 ¶¶ 113, 114, 139, 140, Figs 4C, 4D (steps 246, 282)). Relying on these disclosures, Petitioner contends that "a user may save or erase images as needed to synchronize the content of portable device memory 48 with the data stored in storage medium 88" and "[t]hese steps thereby facilitate synchronizing." Pet. 39–40 (citing Ex. 1027 ¶ 108).

In the Institution Decision, we found that "Petitioner's evidence is not sufficient to support its contentions regarding anticipation of dependent claims 65 and 114." Inst. Dec. 41. Based on the preliminary record then before us, we were "not persuaded that Iida's disclosure of steps for

allowing a user to save and erase data is a disclosure of program code to facilitate synchronizing content." *Id.* Patent Owner argues that our determination is correct, arguing that "[n]either Petitioner nor Mr. Geier identify anything in Iida that suggests data synchronization." PO Resp. 52 (citing Ex. 2003 ¶ 65).

In reply, Petitioner argues that claims 65 and 114 recite program code that "facilitates synchronizing content" and that synchronization need not proceed automatically or without user interaction. Pet. Reply 18. Referring to Iida's log-in processing steps 244 and 256, Petitioner contends that a "communication sent during log-in to the image server secures a communication line, which facilitates further communications between the camera and the image server through the terminal" and "makes it easier for a user to save image data to image server 18 so as to be able to synchronize with image content on the camera." *Id.* at 18–19 (citing Pet. 23).

After considering the parties' arguments and evidence, we are not persuaded by Petitioner's analysis of claims 65 and 114. Petitioner does not present any claim construction or other argument that would permit us to read "facilitate synchronizing content" so broadly as to encompass Iida's steps for allowing a user to save and erase data on camera 12 and image server 18 or log-in processing steps for securing a communications line between the camera and the image server. Nor does Petitioner present argument or evidence sufficient to persuade us that "synchronizing content" is implicitly disclosed by Iida. *Cf. AstraZeneca*, 633 F.3d at 1055 (dispositive question regarding anticipation is whether one skilled in the art would reasonably understand or infer from a prior art reference that every claim element is disclosed in that reference).

For these reasons, we find that Petitioner has not shown by a preponderance of the evidence that Iida discloses the additional limitations of claims 65 and 114.

6. Dependent Claims 66 and 115

Claim 66 depends from claim 55 and recites, "wherein the step of executing fourth program code stored on the portable device memory causes a communication to be transmitted to the communications network node to facilitate the ***transmission of a live data feed*** to the terminal." Ex. 1001, 37:28–32 (emphasis added). Claim 115 depends from claim 104 and recites, "wherein the portable device is configured to execute the fourth program code to cause a communication to be transmitted to the communications network node to facilitate the ***transmission of a live data feed*** to the terminal." *Id.* at 42:30–34 (emphasis added).

Petitioner contends that Iida discloses transmitting a plurality of images from the image server to the terminal and explicitly contemplates accommodating a 160-second dynamic image with sound, i.e., a short video with audio. Pet. 40–41 (citing Ex. 1003 ¶¶ 127, 128, 153). Relying on Mr. Geier's testimony, Petitioner contends that "it makes no difference whether the short video is a recorded feed or a live feed as recited in claims 66 and 115." Pet. 41 (citing Ex. 1027 ¶ 109).

Patent Owner argues that "live" means "at the actual time of occurrence" and "[d]ownloading an entire file and playing it back later does not count as 'live.'" PO Resp. 53 (citing Ex. 2122, 160:24–161:2,

185:19–186:18; Ex. 2125,[14] 728; Ex. 2139 ¶¶ 133–135). According to Patent Owner, "[t]he only data transmitted from one device to another in Iida are discrete image data files, which are not received live, but downloaded in their entirety before being stored or viewed." *Id.* at 54 (citing Ex. 1003 ¶¶ 106, 114, 128; Ex. 2122, 176:7–10). Patent Owner argues that live data feeds are handled differently from other types of downloads, requiring large bandwidth and protocols such as Real-time Transport Protocol (RTP) or isochronous transfers. *Id.* (citing Ex. 2129,[15] 24; Ex. 2139 ¶ 139). According to Patent Owner, a live data feed would be contrary to Iida's goal "'to suppress the communication cost' associated with transferring image data." *Id.* at 55 (quoting Ex. 1003 ¶ 20 and citing Ex. 2139 ¶ 140).

In response, Petitioner directs us to Iida's disclosure that "the image data according to the present invention is not restricted to image data expressive of a still image, but it may well be image data expressive of a dynamic image." Ex. 1003 ¶ 153; Pet. Reply 19. According to Petitioner, Iida discloses log-in processing to set up a communication channel between the terminal and the image server and explicitly contemplates different content types such as dynamic images. Pet. Reply 19–20 (citing Ex. 1003 ¶¶ 127, 153). Petitioner argues that delivery protocols such as RTP or isochronous transfers are neither claimed nor disclosed in the '703 Patent. *Id.* at 20. According to Petitioner, "[t]he content and delivery protocols

---

[14] Merriam Webster's Collegiate Dictionary 11th Edition, definition of "live."

[15] James T. Geier, Network Reengineering The New Technical Imperative, McGraw Hill (1996).

merely amount to intended uses of the communication channel resulting from the claimed communication to the network node." *Id.*

Patent Owner disagrees, arguing that "a live data feed is not . . . merely an intended use of a system agnostic to the type of data transmitted," again referring to the use of "protocols such as Real-time Transport Protocol (RTP) and isochronous transfers." PO Sur-reply 20.

After considering the parties' arguments and evidence, we are not persuaded by Petitioner's analysis of dependent claims 66 and 115.

Petitioner does not dispute Patent Owner's definition of "live" as meaning "at the actual time of occurrence." PO Resp. 53. Patent Owner's definition is supported by a dictionary definition (Ex. 2125, 728), as well as the testimony of Petitioner's expert. Ex. 2122, 160:24–161:2 ("Q. But, so it's transmitted at the time of the actual event, that's what live means, right? A. That's fair."); *see also id.* at 185:19–186:18 (transmitting a prerecorded data file would not be a live data feed).

Petitioner also does not dispute Patent Owner's contention that a live data feed is not explicitly disclosed by Iida. PO Resp. 54. Patent Owner's contention is supported by Mr. Geier's testimony. Ex. 2122, 176:7–10 ("Q. So it's at least fair to say that you never say explicitly that Iida teaches a live data feed, correct? A. That's fair.").

Petitioner does not present argument or evidence sufficient to persuade us that facilitating "the transmission of a live data feed" is implicitly disclosed in Iida. *Cf. AstraZeneca*, 633 F.3d at 1055 (dispositive question regarding anticipation is whether one skilled in the art would reasonably understand or infer from a prior art reference that every claim element is disclosed in that reference). We find that, even if Iida implicitly

discloses transmission of a dynamic image with sound (Ex. 1003 ¶¶ 127, 153), there is no explicit or implicit disclosure that the transmission is a live data feed as opposed to transmission of prerecorded data file, which Mr. Geier conceded is not the same as transmission of a live data feed. Ex. 2122, 185:19–186:19.

Petitioner argues the issue in two ways. First, Petitioner attempts to equate a "live data feed," as recited in the claim, with recorded video data, as disclosed in Iida, arguing there is "no difference" between the two. Pet. 40–41; Pet. Reply 19–20. Petitioner relies on Mr. Geier's opinion that "it makes no difference whether the video is a recorded feed or a live feed." Ex. 1027 ¶ 109. After considering the record as a whole, including Dr. Butler's testimony, we find that Mr. Geier's opinion is conclusory, insufficiently supported by explanation or evidence, and contradicted by his deposition testimony. Ex. 2122, 185:19–186:19. In contrast, Dr. Butler provides detailed, evidence-supported testimony that live data feeds are handled differently from other types of downloads. Ex. 2139 ¶¶ 139, 143–147 (citing, quoting, and explaining Exs. 2130, 2135, 2136, 2137). Dr. Butler's testimony is unrebutted by Petitioner. We credit Dr. Butler's testimony and find that facilitating the download of dynamic image data, as disclosed in Iida, is not the same as facilitating transmission of a live data feed.

Second, Petitioner argues that "[t]he content and delivery protocols merely amount to ***intended uses*** of the communication channel resulting from the claimed communication to the network node." Pet. Reply 20 (emphasis added). Petitioner appears to invoke the principle that "the recitation of a new intended use for an old product does not make a claim to that old product patentable." *In re Schreiber*, 128 F.3d 1473, 1477 (Fed. Cir.

1997). Petitioner does not, however, develop its intended use argument sufficiently. For example, Petitioner does not expressly argue that the recitation of a "live data feed" in claims 66 and 115 should not be given patentable weight. Petitioner does not cite any case law or other legal authority for its intended use argument, nor explain how such authority applies to the facts of this case.

For these reasons, we find that Petitioner has not shown by a preponderance of the evidence that Iida discloses the additional limitations of claims 66 and 115.

7. Remaining Dependent Challenged Claims

Petitioner contends that Iida discloses the additional limitations of dependent claims 58–60, 63, 67–72, 77, 81–87, 92, 94–98, 103, 107–109, 112, 116–121, and 126–129. Pet. 34–36, 38–39, 41–53. Patent Owner does not argue these dependent claims separately from independent claims 55, 78, 93, and 104. *See generally* PO Resp.; PO Sur-reply.

Based on the evidence and arguments presented in the Petition, we determine that Petitioner has demonstrated by a preponderance of the evidence that Iida discloses the additional limitations of dependent claims 58–60, 63, 67–72, 77, 81–87, 92, 94–98, 103, 107–109, 112, 116–121, and 126–129.

8. Conclusion Regarding Petitioner's Anticipation Ground

Petitioner has shown by a preponderance of the evidence that independent claims 55, 78, 93, and 104, and dependent claims 58–63, 67–72, 77, 81–87, 92, 94–98, 103, 107–112, 116–121, and 126–129 of the '703 Patent are unpatentable as anticipated by Iida.

Petitioner has not shown by a preponderance of the evidence that dependent claims 56, 65, 66, 75, 90, 101, 105, 114, 115, and 124 of the '703 Patent are unpatentable as anticipated by Iida.

E. Petitioner's Obviousness Ground: Iida and Yang

Petitioner contends that dependent claims 61, 62, 65, 110, 111, and 114 are unpatentable as obvious in view of Iida and Yang. Pet. 53–56. We first provide an overview of Yang and then analyze the claims challenged in this ground.

1. Yang (Ex. 1006)

Yang discloses a method for updating printer firmware. Ex. 1006, codes (54) and (57), 1:51–52, 2:22–23. Yang's method involves "downloading the new-version printer firmware from the Internet or some media and sending the new-version printer firmware into a nonvolatile memory" of the printer. *Id.* at 1:52–56. Yang describes the disclosed method as an improvement over "the old regime" in which the printer firmware is programmed in a ROM and updating the firmware required replacing the ROM. *Id.* at 1:34–47, 2:29–33; *see also id.* at 2:33–35 ("Unlike the old-fashioned printer, a nonvolatile memory for storing the printer firmware is instead adopted.").

Yang discloses three possible sources for new-version printer firmware: the network, soft diskettes, or compact disks. Ex. 1006, 2:25–27. Among these, Yang states that "downloading the firmware from the network is accepted widely and is often viewed as the best way." *Id.* at 2:27–29; *see also id.* at 3:50–51 ("The network, the CD-ROM or the soft drive provides the computer with a new printer firmware . . . .").

According to Yang's method, a user first downloads a new-version printer firmware through a network from a remote server to a computer, which is connected to the network through a modem. Ex. 1006, 2:52–59. The downloaded new-version printer firmware is then transmitted from the computer to the printer through an input port of the printer. *Id.* at 2:59–63; Fig. 1 (showing flow of printer firmware from a remote server to a printer).

2. Claims 61, 62, 65, 110, 111, and 114

As discussed above, claims 61, 62, 110, and 111 of the '703 Patent recite "the download of program code from the communications network node" either to "the terminal" (claims 61 and 110) or to "the portable device" (claims 62 and 111). *See, e.g.*, Ex. 1001, 36:66–37:10. Claims 65 and 114 recite "synchronizing content on the portable device with content on the communications network node." *See, e.g.*, *id.* at 37:22–27.

Petitioner relies on Yang to teach "providing electronic devices with updated versions of program code downloaded from the Internet." Pet. 53 (citing Ex. 1006, 1:52–56, 2:27–29). Petitioner contends that "[g]iven the well-known benefits of updating over the Internet . . . a POSITA would have been motivated to provide a method for updating the program code in the Iida camera over the Internet." Pet. 54 (citing Ex. 1027 ¶ 53). Petitioner additionally contends that updating and synchronizing amount to the same thing. Pet. 56.

In the Institution Decision, we determined:

> Petitioner's rationale for combining Iida and Yang is not persuasive. Petitioner asserts that "making updates available over the Internet" is advantageous because it provides consumers with "immediate and easy access to updates when they become available." Pet. 54. Petitioner does not, however, persuade us that such an advantage is applicable in the context

> of Iida, where the device Petitioner contends would be updated is a rental camera that is lent to a consumer by a shop that writes data into the camera's nonvolatile memory before each use. Ex. 1006 [*sic*, Ex. 1003] ¶¶ 12, 19, 27, 64, 73, 75 ("When the user has paid the necessary fee, the shop . . . delivers the digital still camera 12 to the user after writing the user ID and such information as a password and access point information . . . to the built-in memory 48 of the digital still camera 12 to be lent."); *id.* ¶ 112 ("access point information . . . is written into the built-in memory 48 by the shop when the camera 12 is delivered to the user"). Petitioner does not explain persuasively why access to updates over the Internet would have been advantageous in Iida's rental camera scenario.

Inst. Dec. 45–46.

Patent Owner contends that our determination in the Institution Decision is correct, arguing that "it would be highly undesirable to allow rental customers to update the software on the camera" and that Petitioner "does not demonstrate that a POSITA would have been motivated to add a firmware update mechanism to Iida." PO Resp. 55–56.

In response, Petitioner argues that Patent Owner and the Board err by failing to consider obviousness from the perspective of a POSITA who is an engineer. Pet. Reply 20–21. According to Petitioner, "Yang demonstrates that the need for updates and the preference for updating over the Internet was well-known." *Id.* at 21 (citing Ex. 1006, 2:27–29; Ex. 1027 ¶ 131). Petitioner argues that "[w]hether the shop owner, renter or the shop's IT guy take the camera through the updating steps is irrelevant" and that programming Iida's camera to receive a download of a program code update would have been "straightforward." *Id.* (citing Ex. 1027 ¶¶ 133, 134; Ex. 1003 ¶ 64).

Patent Owner responds by arguing there is no evidence that updating software over the Internet would provide a benefit, solve a problem, or be relevant in the context of Iida's rental environment. PO Sur-reply 21.

We agree with Patent Owner. After considering the parties' arguments and evidence and the record as a whole, we determine that our analysis of Petitioner's combination of Iida and Yang in the Institution Decision (Inst. Dec. 45–46) is correct and adopt it as part of the reasoning supporting our final decision. Additional reasoning is provided below.

The "fourth program code" limitations of dependent claims 61, 62, 65, 110, 111, and 114 cannot be viewed in isolation from the "fourth program code" limitations of independent claims 55 and 104. Nor can Petitioner's theory of obviousness for these dependent claims be viewed in isolation from Petitioner's contentions for how the "fourth program code" limitation of claims 55 and 104 is taught by Iida.

As presented in the Petition, Petitioner's theory of obviousness was that a POSITA would have been motivated to modify Iida's camera 12 to allow the user, i.e., the person to whom a camera is rented, to make a request for a download of program code in the same way the user makes a request for a download of image data from image server 18. Pet. 55. This theory is consistent with Petitioner's contentions for the "fourth program code" limitation of claims 55 and 104, which rely on functionality provided to the user, i.e., the person to whom the camera is rented. *Id.* at 23–25, 55.

Faced with our finding in the Institution Decision that Petitioner's rationale for combining Iida and Yang is not persuasive in the context of Iida's rental camera scenario (Inst. Dec. 45–46), Petitioner asserts, for the first time in the Reply Brief, that a request for a download of program code

would be made by "the shop owner" or "the shop's IT guy," rather than the person to whom the camera is rented. Pet. Reply 21. That new theory is not consistent with Petitioner's contentions regarding the "fourth program code" limitation of the independent claims, which rely on functionality provided to the end user of the camera, not someone tasked with maintaining it. Pet. 23–25.

More specifically, dependent claims 61, 62, 65, 110, 111, and 114 each recite that executing "fourth program code" causes "a communication to be transmitted to the communications network node." Ex. 1001, 36:66–37:10, 37:22–27, 42:1–12, 42:24–29. Independent claims 55 and 104 recite that the execution of fourth program code is "in response to a communication received by the portable device resulting from user interaction with the interactive user interface." *Id.* at 36:29–34, 41:31–36. When reading claims 55 and 104 on Iida, Petitioner contends that the "user" corresponds to a person to whom the camera is rented, and the "user interaction" corresponds to the user's input of a number via operating unit 64, e.g., a keypad, associated with portable terminal 14, e.g., the user's portable telephone, PDA, or mobile computer. Pet. 23–25. To the extent Petitioner contends that "the shop owner" or "the shop's IT guy" is the user who would update the camera's program code (Pet. Reply 21), Petitioner's contention for claims 61, 62, 65, 110, 111, and 114 is inconsistent with Petitioner's contention for the "fourth program code" limitation of independent claims 55 and 104, where Petitioner contends the user is the person who interacts with the IUI on the terminal, i.e., the person to whom the camera is rented (Pet. 23–25).

Accordingly, we determine that Petitioner has not shown by a preponderance of the evidence that it would have been obvious to combine Iida and Yang to arrive at the subject matter of claims 61, 62, 65, 110, 111, and 114.[16]

F. Petitioner's Obviousness Ground: Iida and Shaffer

Petitioner contends that dependent claims 57 and 106 are unpatentable as obvious in view of Iida and Shaffer. Pet. 56–59. We first provide an overview of Shaffer and then analyze the claims challenged in this ground.

1. Shaffer (Ex. 1028)

Shaffer discloses a secure method for granting customer access to images and image-related services at an image fulfillment center. Ex. 1028, codes (54) and (57), 2:26–28. Shaffer's method includes the step of scanning a customer film image to generate high and low resolution digital versions of the image. *Id.* at code (57), 2:28–30, 3:12–20, 3:65–4:13. The high resolution version is stored along with an ID and a security key at the fulfillment center, and the low resolution version is sent to the customer on a storage device, such as a floppy diskette, along with an encrypted ID and security key. *Id.* at code (57), 2:30–36, 3:21–31, 4:16–22, 4:60–67. After reviewing and selecting images for printing, the customer sends an encrypted request, along with the encrypted ID, to the fulfillment center via a communication link, such as a telephone line or an Internet connection. *Id.* at code (57), 2:37–40, 3:41–54, 5:17–38. The fulfillment center decrypts the

---

[16] As discussed above, we determine that Petitioner has shown that claims 61, 62, 110, and 111 are anticipated by Iida, but has not shown that claims 65 and 114 are anticipated by Iida. *See* Sections II.D.4, 5.

request and the ID and retrieves the stored high resolution image to fulfill the customer's request. *Id.* at code (57), 2:40–45, 3:55–63, 5:39–50. According to Shaffer, the disclosed method provides "an adequate level of security" for the high resolution images stored at the fulfillment center and protects against unauthorized access and use of the customer's images. *Id.* at 5:1–16, 6:2–5.

Shaffer also discloses "a mechanism for secure delivery of the high resolution image to the customer." Ex. 1028, 6:6–8. According to Shaffer, "processing of a request for delivery of this high resolution image will involve encrypting and sending [over a network] only the difference between the low resolution and higher resolution versions of the image," which enables the customer to reconstruct the high resolution image from the low resolution image on the floppy diskette. *Id.* at 6:8–18. Shaffer explains that "the difference data is protected both by encryption with the security key" and "interception and decryption of the difference data . . . is not sufficient to allow utilization of the higher resolution image without access to the base image." *Id.* at 6:19–24.

2. Claims 57 and 106

Claim 57 of the '703 Patent depends from claim 55 and recites: "wherein the step of executing fourth program code stored on the portable device memory causes a communication to be transmitted to the communications network node to facilitate the transmission of encrypted communications from the communications network node to the terminal." Ex. 1001, 36:43–48. Claim 106 depends from claim 104 and recites: "wherein the portable device is configured to execute the fourth program code to cause a communication to be transmitted to the communications

network node to facilitate the transmission of encrypted communications from the communications network node to the terminal." *Id.* at 41:45–50.

Petitioner contends that Iida discloses all of the limitations of claims 57 and 106, except for encryption, which Petitioner contends is taught by Shaffer. Pet. 57–59 (citing Ex. 1028, 1:29–41, 3:50–54, 6:2–5, 6:11–14). Petitioner contends that a "POSITA would have been motivated to use encryption to allow the secure downloading and transfer of data related to photographs and to ordering and other information to prevent others from viewing photographs." Pet. 58 (citing Ex. 1027 ¶ 140).

Patent Owner argues that a POSITA would not have been motivated to combine Iida and Shaffer in view of differences between the two disclosures, including: (1) Iida's ***digital*** camera, as compared with Shaffer's ***film*** camera; and (2) Iida's lack of concern about the security of camera images. PO Resp. 59–60. In addition, Patent Owner argues that a POSITA combining Iida and Shaffer would not have arrived at the claimed invention because Shaffer does not address "the ***way*** that the transmission of encrypted communications is facilitated according to the claims, or the ***device*** to which the encrypted communications are sent." *Id.* at 60–61.

For the reasons discussed above, we find that Iida discloses all elements of claims 55 and 104 from which claims 57 and 106 depend, respectively. We also find that Iida discloses the limitations of dependent claims 57 and 106 to the extent that they repeat limitations recited in independent claims 55 and 104, i.e., "the step of executing fourth program code stored on the portable device memory causes a communication to be transmitted to the communications network node" (Ex. 1001, 36:43–48 (claim 57)) and "the portable device is configured to execute the fourth

program code to cause a communication to be transmitted to the communications network node" (*id.* at 41:45–50 (claim 106)).

We find that Petitioner shows that Iida's camera 12 ("the portable device") stores and executes program code that performs log-in processing, including transmission of a user ID and password (a "communication") to image server 18 (a "communications network node"). Pet. 56–57; Ex. 1003 ¶¶ 113, 127. As shown by Petitioner and disclosed by Iida, the transmission of a user ID and password creates a communication channel with image server 18 that facilitates the transmission of image data ("communications") from the image server (the "communications network node") to portable terminal 14 (the "terminal"). Pet. 57; Ex. 1003 ¶¶ 113, 127, 128. Accordingly, we find that Iida discloses all limitations of claims 57 and 106, except for the limitation that the communications transmitted from the communications network node to the terminal are encrypted.

We find that Shaffer fills the gap left by Iida in a way that suggests the subject matter of claims 57 and 106. As shown by Petitioner, Shaffer is directed to a secure method for granting customer access to digital images and image related services. Ex. 1028, codes (54) and (57), 1:6–8, 2:24–28; Pet. 57. Shaffer expresses concern about hackers and interception of communications by third parties. Ex. 1028, 2:6–9, 5:4–11, 6:2–5, 6:21–24. To address this concern, Shaffer discloses encryption as a way to provide security for communications between a customer who creates photographic images and a service center that stores the customer's digital images and fulfills requests, e.g., for prints and enlargements. *Id.* at code (57), 2:29–45, 3:24–31, 3:47–57, 4:60–67, 5:26–50, 6:6–24. For example, Shaffer teaches encryption of image data (e.g., difference data between the high and low

resolution images) sent from a fulfillment center to the customer over a network. *Id.* at 6:11–15, 6:19–21.

We find that Shaffer's teachings about encryption are directly applicable to Iida. Shaffer teaches encryption as a way to provide security and prevent access to photographic image data by hackers and third party interceptors. *See, e.g.*, Ex. 1028, 2:6–9, 2:29–45, 5:4–11, 6:2–24. These same concerns apply to Iida, where photographic image data is transmitted over the Internet from image server 18 to portable terminal 14 for display to the user. Ex. 1003 ¶¶ 31, 127, 128. We find that, in view of Schaffer, a POSITA would be concerned about the security of Iida's transmission of photographic image data over the Internet. We credit Mr. Geier's testimony that "[a] POSITA would have been motivated by Shaffer to encrypt the transfer of data related to photographs in order to prevent others from viewing sensitive photographs." Ex. 1027 ¶ 140. We also credit Mr. Geier's testimony that "the modifications needed to the image server in Iida to implement encryption as disclosed by Shaffer would have been straightforward and within easy grasp of a POSITA." *Id.* ¶ 142.

We determine that Petitioner's arguments and evidence are not rebutted by Patent Owner. Although Patent Owner contrasts Iida's ***digital*** camera with Shaffer's ***film*** camera (PO Resp. 59), we agree with Petitioner that "[t]he type of camera is irrelevant to the common benefit from encrypting communications sent over the Internet" (Pet. Reply 22). We have also considered Patent Owner's argument that Iida is unconcerned about the security of camera images. PO Resp. 60. As discussed above, however, we find that Petitioner has established a reason for modifying Iida to incorporate encryption based on the teachings of Shaffer (*see, e.g.*,

Ex. 1028, 2:6–9, 2:29–45, 5:4–11, 6:2–24), the testimony of Mr. Geier (Ex. 1027 ¶¶ 140–142), and relevance and applicability of Shaffer's teachings to Iida's system, as discussed above. Furthermore, although Patent Owner argues that Shaffer does not disclose an interactive user interface, a portable device, program code stored on the portable device memory to cause a communication to be transmitted to a communications network node, and "transmission of encrypted communications from the communications network node to the terminal" (PO Resp. 61–62), for the reasons discussed above, we find that Petitioner has shown that Iida discloses all limitations of claims 57 and 106 except for encryption, and that "transmission of encrypted communications from the communications network node to the terminal" is taught by the combination of Iida and Shaffer.

We have considered Patent Owner's arguments concerning objective indicia of nonobviousness. PO Resp. 65–66. For the reasons discussed below, we find that Patent Owner's evidence purportedly showing commercial success, licensing, industry praise, and skepticism does not outweigh Petitioner's evidence concerning obviousness of claims 57 and 106.

Accordingly, we determine that Petitioner has shown by a preponderance of the evidence that the subject matter of dependent claims 57 and 106 would have been obvious in view of Iida and Shaffer.

G. Petitioner's Obviousness Ground: Iida and Davis

Petitioner contends that dependent claims 74, 89, 100, and 123 are unpatentable as obvious in view of Iida and Davis. Pet. 60–62. We first

provide an overview of Davis and then analyze the claims challenged in this ground.

1. Davis (Ex. 1029)

Davis discloses systems and methods for authenticating client requests to access server resources. Ex. 1029, codes (54) and (57).

By way of background, Davis explains that an important security issue related to client-server communications is "authentication," which "involves verifying that the entity with whom a client or server is communicating is, in fact, who the client or server thinks the entity is." Ex. 1029, 1:28–29, 1:34–37. The background section of Davis discloses digital certificates as an alternative to a user name and password as an authentication method. *Id.* at 1:38–45. Specifically, Davis discloses:

> HTTP-layer authentication typically requires HTTP challenge-response requests between a client and web server for access to server resources. This type of authentication typically requires the user to provide a user name and password to the server which then validates this information by comparing it with information contained within an access control list (ACL). Another authentication method utilizes digital certificates (referred to hereinafter as "certificates").

Id.

Davis continues by explaining how authentication using a digital certificate works:

> When a client sends a request to access certain resources via a server, the server may request that the client transmit a certificate to the server for authentication purposes. When the server receives the certificate, it looks at the IP address of the client sending the certificate or the name of the individual user sending the request and then checks an ACL containing the IP addresses or user names authorized to access the requested resources.

Ex. 1029, 1:52–59. Davis characterizes the above procedure as "inefficient and time consuming, especially when the ACL contains many IP addresses and/or user names" and administratively burdensome because it "requires that ACLs be updated each time an individual user is granted or denied access to specific server resources." *Id.* at 1:60–66.

Davis discloses an improvement of the above-described authentication method. Ex. 1029, 2:5–56 (summary of the invention). According to Davis's improvement, "authentication may be performed on a more generalized basis," which is "advantageous because access to server resources can be based upon more generalized rules without having to define each user or IP address to a server." *Id.* at 2:40–42, 2:47–49. Davis's method "can eliminate the burden of having to keep ACLs up-to-date with individual user information" because "access rights can be granted or denied on a more generic level." *Id.* at 2:50–53.

Davis includes a section headed "Certificates," which explains what a digital certificate is and how it works. Ex. 1029, 5:42–6:46. According to Davis, "[a] certificate is a securely encoded data structure that includes the name and other identifying information about the holder of the certificate." *Id.* at 5:44–46. Davis explains:

> Certificates are often used to limit access to server resources. In client-server networks, they are used to identify parties involved in a transaction or data exchange. For example, when a user wishes to access the FTP services of a server, he/she sends an FTP request to the server. The server requests the client's web browser to send the user's certificate for verification. The server checks the distinguished name on the certificate and then searches through an access control list (ACL) to determine if this user has authority to access the requested resources. Alternatively, the server may request the

> user to submit his/her name and a password. An ACL is a detailed list of users and groups that are explicitly given permission to access resources on servers. Unless a particular user, or the client IP address, is listed within an ACL and his or her access rights set forth therein, the user will not be able to access the requested resources.

Id. at 6:30–46.

Davis describes an improved authentication method in a section headed, "Authentication Based On Sub-Fields." Ex. 1029, 6:48–8:63. Here, Davis discloses that "user authentication via certificates may be performed without requiring that an ACL contain any information about the particular user." *Id.* at 7:12–15. According to Davis, "[b]y using one or more sub-fields of the distinguished name field (or other certificate fields), authentication may be performed on a more generalized basis." *Id.* at 7:15–17. This way, "ACLs do not need to be updated whenever a new user is granted access to server resources, or an existing user is denied access," which reduces administrative burdens for large organizations. *Id.* at 7:25–30.

2. Claims 74, 89, 100, and 123

Claims 74, 89, 100, and 123 of the '703 Patent each recites "the data stored on the portable device memory comprises a digital certificate." *See, e.g.*, Ex. 1001, 37:65–67. Claims 74, 89, 100, and 123 depend from claims 71, 86, 97, and 120, respectively, which each recite providing "the terminal with data stored on the portable device memory to facilitate the terminal to transmit a communication to the communications network node." *See, e.g.*, *id.* at 37:54–59. Claims 71, 86, 97, and 120 depend from claims 55, 78, 93, and 104, respectively. *See, e.g.*, *id.*

Petitioner contends that Iida discloses "authentication of the camera" using a "user ID and password," "but does not mention a 'digital certificate.'" Pet. 60 (citing Ex. 1003 ¶ 113, Fig. 4C (step 246)). Citing teachings in Davis, Petitioner contends that using a digital certificate instead of the user ID and password of Iida would have been a simple substitution that would have provided advantages, including enhanced security. Pet. 61–62 (citing Ex. 1027 ¶¶ 145, 147; Ex. 1029, 1:38–54, 5:44–48, 5:49–51, 5:54–55, 6:35–42).

In the Institution Decision, we found:

> Petitioner has not provided a persuasive rationale for its combination of Iida and Davis. Iida teaches a user ID and password for authentication of the ***user***, not authentication of the rental ***camera***. Ex. 1003 ¶ 113 ("the user renting the digital still camera 12 is authenticated" when the user ID and password are transmitted to image server 18). Davis, on the other hand, teaches a digital certificate for authenticating a client device. Ex. 1029, code (57), Fig. 1. On this record, Petitioner has not shown sufficiently that substituting a digital certificate, as taught by Davis, for the user ID and password of Iida, would permit authentication of the user who rents the camera, as described in Iida. Although Petitioner directs us to Davis's disclosure that a certificate "includes the name and other identifying information about the holder of the certificate" (Pet. 61, quoting Ex. 1029, 5:44–46), Petitioner does not address the disclosures cited by Patent Owner, which support that Davis's method of authentication using a digital certificate does not result in authentication of an individual user. Ex. 1029, 2:50–53; *see also id.* at 7:12–35.

Inst. Dec. 48–49.

Patent Owner argues that the Board's findings in the Institution Decision are "consistent with the purpose of Davis, which is to control access for groups of users (not individual users) based upon generalized

rules without having to define each user or IP address to a server." PO Resp. 62–63 (emphasis omitted). Patent Owner argues that Davis's certificate "would not work to authenticate the user of Iida" because Iida's rental camera is used by multiple users and "[i]t would make no sense for all of the different users . . . to share access control." *Id.* at 63. Patent Owner additionally argues that the combination of Iida and Davis fails to meet claims 74, 89, 100, and 123, and a POSITA would not have been motivated to combine Iida and Davis. *Id.* at 63–65.

In the Reply, Petitioner clarifies that the Petition's obviousness ground is not based on the inventive system of Davis, but on "Davis's explanation that in the prior art digital certificates were well known alternatives to user name and password." Pet. Reply 24–25 (citing Ex. 1029, 1:40–45, 6:35–42). According to Petitioner, "[t]he ground relies on the disclosure in Davis of interchangeability of a digital certificate with a user ID and password, not on Davis's system and new use of certificates to provide access on a generalized basis according to sub-fields." *Id.* at 25. Petitioner contends that "a POSITA would have substituted a digital certificate for the user ID and password in the photographing system of Iida." *Id.* (citing Ex. 1027 ¶ 145).

Patent Owner responds that there is no statement in Davis that a digital certificate is "interchangeab[le]" with a user ID and a password. PO Sur-reply 24.

After considering the parties' arguments and evidence and based on the record now before us, we determine that our analysis of Petitioner's obviousness ground based on Iida and Davis as set forth in the Institution Decision was incorrect.

The Petition relies on Davis's teaching that "authentication with digital certificates is an alternative to user names and passwords." Pet. 60; Pet. Reply 24–25. Petitioner's contention is supported by Davis, which describes digital certificates as an alternative to a user name and password for authentication. Ex. 1029, 1:38–51, 6:35–42; *see* Pet. 60–61 (paraphrasing and quoting Ex. 1029, 1:38–51); Pet. Reply 25 (citing Ex. 1029, 6:35–42). In view of Davis' teaching, we are persuaded by Petitioner's contention that "a digital certificate would have been a simple substitution for the user ID and password of Iida." Pet. 61 (citing Ex. 1027 ¶ 145). Petitioner's contention is also supported by Mr. Geier's testimony. Ex. 1027 ¶ 145.

Our finding in the Institution Decision that Davis teaches a digital certificate for authenticating a ***client device,*** rather than authentication of a ***user*** as in Iida (Inst. Dec. 48–49), was incorrect insofar as it focused on the improvement taught by Davis and overlooked Davis's more general teaching, relied upon in the Petition, that a digital certificate is an alternative to a user name and password. Ex. 1029, 1:38–45, 6:35–42; Pet. 60–61; Pet. Reply 25. Patent Owner's arguments likewise overlook this general teaching. PO Resp. 62–63; PO Sur-reply 23–24.

On the present record, we find that Petitioner has shown that substituting a digital certificate, as taught by Davis, for the user ID and password of Iida, would permit authentication of the user to whom the camera is rented, as described in Iida. Our finding is supported by Davis's disclosure that a certificate "includes the name and other identifying information about the holder of the certificate." Ex. 1029, 5:44–46; *see* Pet. 61 (quoting this passage from Davis). Our finding is also supported by

Davis's description of how a digital certificate functions as an alternative to a user name and password. More specifically, Davis discloses that, when a server receives a digital certificate for authentication purposes, the server looks at the user name on the certificate and searches through an access control list (ACL) containing user names to determine whether the user is authorized to access the requested resources. Ex. 1029, 1:52–59, 6:35–46; *see* Pet. 61 (citing these portions of Davis). Although Davis discloses an inventive method of authentication that does not result in authentication of an individual user (Ex. 1029, 2:50–53, 7:12–35), that disclosure does not detract from Davis's teaching that a digital certificate can be used to authenticate an individual user (*id.* at 1:52–59, 6:35–46).

We find that Petitioner has shown that a POSITA would have been motivated to implement authentication in Iida with digital certificates as taught by Davis instead of user IDs and passwords. Pet. 61–62 (citing Ex. 1027 ¶ 147). Our finding is supported by Davis's description of the advantages of digital certificates for authentication. Pet. 61 (citing Ex. 1029, 5:44–55). Among these advantages are security, reliability, and protection against forgery and alteration. Ex. 1029, 5:44–55.

We credit Mr. Geier's testimony that "Iida could benefit from enhanced security." Ex. 1027 ¶ 147. Mr. Geier's testimony is supported by Iida, which discloses that information is exchanged between a user and a server over the Internet and expresses a concern for the security of the user's information. Ex. 1003 ¶¶ 127, 150 (discussing encryption of user's information).

We are also persuaded that Petitioner's proposed substitution of a digital certificate, as taught by Davis, for the user ID and password of Iida,

would be would be nothing more than the combination of familiar elements according to known methods to yield predictable results. *KSR*, 550 U.S. at 416. Our finding is supported by Davis, which discloses digital certificates as an alternative to a user ID and password for authentication of a user. Ex. 1029, 1:38–45, 6:31–46. Our finding is also supported by Mr. Geier's testimony. Ex. 1027 ¶ 147.

Patent Owner argues that the combination of Iida and Davis fails to meet claims 74, 89, 100, and 123 because Davis "does not have two different devices on the client side." PO Resp. 63–64. Patent Owner's argument does not persuasively rebut Petitioner's obviousness case, which relies on Iida, not Davis, to teach two devices on the client side—Iida's digital camera 12 (a portable device) and terminal 14. Pet. 13–16, 60; Ex. 1003 ¶ 57, Figs. 1A, 1B. Furthermore, in Petitioner's combination, a digital certificate is substituted for Iida's user ID and password. Pet. 61. Patent Owner does not dispute Petitioner's contention that Iida discloses transmitting a user ID and password stored in memory 48 of camera 12 to image server 18 through terminal 14. *Id.* at 43–44 (addressing claim 71; citing Ex. 1003 ¶¶ 110, 113). Accordingly, Petitioner persuades us that the combination of Iida and Davis discloses the limitations of claims 74, 89, 100, and 123 (and claims 71, 86, 97, and 120 from which they depend).

Patent Owner argues that a POSITA would not have been motivated to combine Iida and Davis because the two references "are for different and unrelated purposes" and because "the Petition identifies no technical shortcoming or problem expressed in Iida that would be solved by combining it with Davis." PO Resp. 64. We disagree. Petitioner shows that a digital certificate, as taught by Davis, serves the same purpose—

authentication of a user—as a user ID and password, as taught by Iida. Pet. 60–61; Ex. 1027 ¶ 145; Ex. 1029, 1:38–51, 6:35–42. Petitioner also shows that substituting a digital certificate for Iida's user ID and password would provide enhanced security for information exchanged between a user and the image server in Iida. Pet. 61–62; Ex. 1003 ¶¶ 127, 150; Ex. 1027 ¶ 147; Ex. 1029, 5:44–55. Accordingly, Petitioner persuades us that a POSITA would have been motivated to combine Iida and Davis to arrive at the subject matter of claims 74, 89, 100, and 123.

We have considered Patent Owner's arguments concerning objective indicia of nonobviousness. PO Resp. 65–66. For the reasons discussed below, we find that Patent Owner's evidence purportedly showing commercial success, licensing, industry praise, and skepticism does not outweigh Petitioner's evidence concerning obviousness of claims 74, 89, 100, and 123.

Accordingly, we determine that Petitioner has shown by a preponderance of the evidence that the subject matter of dependent claims 74, 89, 100, and 123 would have been obvious in view of Iida and Davis.

H. Objective Indicia of Nonobviousness[17]

Patent Owner argues that patentability is supported by objective indicia of nonobviousness. PO Resp. 65–66.

Objective indicia of nonobviousness may include long-felt but unsolved need, failure of others, unexpected results, commercial success, copying, licensing, industry praise, and expert skepticism. *Mintz v. Dietz &*

---

[17] The analysis below applies to each of Petitioner's obviousness grounds discussed above.

Watson, Inc., 679 F.3d 1372, 1379 (Fed. Cir. 2012). "[O]bjective indicia may often be the most probative and cogent evidence of nonobviousness in the record," and "help turn back the clock and place the claims in the context that led to their invention." *Id.* at 1378. Evidence of objective indicia of nonobviousness "must always when present be considered en route to a determination of obviousness." *Transocean Offshore Deepwater Drilling, Inc. v. Maersk Drilling USA, Inc.*, 699 F.3d 1340, 1349 (Fed. Cir. 2012); *see also Apple Inc. v. Samsung Elecs. Co.*, 839 F.3d 1034, 1048 (Fed. Cir. 2016) (en banc).

Objective indicia of nonobviousness are "only relevant to the obviousness inquiry 'if there is a nexus between the claimed invention and the [objective indicia of nonobviousness].'" *In re Affinity Labs of Tex., LLC*, 856 F.3d 883, 901 (Fed. Cir. 2017) (quoting *Ormco Corp. v. Align Tech., Inc.*, 463 F.3d 1299, 1312 (Fed. Cir. 2006)). For objective indicia of nonobviousness to be accorded substantial weight, their proponent must establish a nexus between the evidence and the merits of the claimed invention. *ClassCo, Inc. v. Apple, Inc.*, 838 F.3d 1214, 1220 (Fed. Cir. 2016).

As the Federal Circuit recently explained, "a patentee is entitled to a rebuttable presumption of nexus between the asserted evidence of secondary considerations and a patent claim if the patentee shows that the asserted evidence is tied to a specific product and that the product '*is* the invention disclosed and claimed.'" *Fox Factory, Inc. v. SRAM, LLC*, 944 F.3d 1366, 1373 (Fed. Cir. 2019) (quoting *Demaco Corp. v. F. Von Langsdorff Licensing Ltd.*, 851 F.2d 1387, 1392 (Fed. Cir. 1988)). That is, presuming nexus is appropriate "when the patentee shows that the asserted objective

evidence is tied to a specific product and that product 'embodies the claimed features, and is coextensive with them.'" *Id.* (quoting *Polaris Indus., Inc. v. Arctic Cat, Inc.*, 882 F.3d 1056, 1072 (Fed. Cir. 2018)). On the other hand, the patentee is not entitled to a presumption of nexus if the patented invention is only a component of a commercially successful machine or process. *Id*. Once "the patentee has presented a *prima facie* case of nexus, the burden of coming forward with evidence in rebuttal shifts to the challenger . . . to adduce evidence to show that the commercial success was due to extraneous factors other than the patented invention." *Demaco*, 851 F.2d at 1392–93.

However, "[a] finding that a presumption of nexus is inappropriate does not end the inquiry into secondary considerations." *Fox Factory*, 944 F.3d at 1373. "To the contrary, the patent owner is still afforded an opportunity to prove nexus by showing that the evidence of secondary considerations is the 'direct result of the unique characteristics of the claimed invention.'" *Id.* at 1373–74 (quoting *In re Huang*, 100 F.3d 135, 140 (Fed. Cir. 1996)). "Ultimately, the fact finder must weigh the secondary considerations evidence presented in the context of whether the claimed invention as a whole would have been obvious to a skilled artisan." *Lectrosonics, Inc. v. Zaxcom, Inc.*, IPR2018-01129, Paper 33 at 33 (PTAB Jan. 24, 2020) (precedential) (citing *WBIP, LLC v. Kohler Co.*, 829 F.3d 1317, 1331 (Fed. Cir. 2016)).

1. Commercial Success

Patent Owner argues that "[t]he invention of the '703 Patent has been a commercial success." PO Resp. 65. Patent Owner directs us to two jury verdicts in which the juries "found infringement of the '047 Patent by

dozens of different products and collectively awarded over $12 million in damages for the sale of tens of thousands of infringing units." *Id.* at 65–66 (citing Exs. 2021, 2022).

The jury verdict relied upon by Patent Owner pertains to the '047 Patent, not the '703 Patent challenged here. Patent Owner presents no analysis demonstrating that the products that were found to infringe the '047 Patent are covered by the challenged claims of the '703 Patent, much less that the infringing products are coextensive (or nearly coextensive) with the challenged claims. *See* PO Resp. 65–66. We, therefore, find that a presumption of nexus is inappropriate. *See Lectrosonics*, Paper 33 at 33; *Fox Factory*, 944 F.3d at 1374.

Nor has Patent Owner shown a nexus between the argued commercial success and the merits of the claimed invention. Patent Owner's evidence establishes that products that infringed the claims of the '047 Patent were sold. *See* Ex. 2021 (jury verdict finding infringement); Ex. 2022 (jury verdict finding infringement). However, because there is no evidence that the alleged commercial success is due to the elements of the '047 Patent, much less the '703 Patent—either individually or as a whole—Patent Owner has not established the required nexus. Simply establishing that a product infringes a related patent is not enough to show a nexus. *See Fox Factory*, 944 F.3d at 1377 (holding that a *prima facie* case of nexus cannot be made by simply showing that "the patent claims broadly cover the product that is the subject of the evidence of secondary considerations").

Moreover, even if a nexus had been shown, there is insufficient evidence to show that the infringing products were a commercial success. The jury verdict forms simply identify the products found to infringe the

’047 Patent and the amount of damages. *See* Ex. 2021; Ex. 2022. There is no evidence—such as a large market share—establishing that those products were a commercial success. *See, e.g.*, *In re Applied Materials, Inc.*, 692 F.3d 1289, 1300 (Fed. Cir. 2012) (“An important component of the commercial success inquiry in the present case is determining whether Applied had a significant market share.”); *Huang*, 100 F.3d at 140 (“This court has noted in the past that evidence related solely to the number of units sold provides a very weak showing of commercial success, if any.”); *In re Baxter Travenol Labs*, 952 F.2d 388, 392 (Fed. Cir. 1991) (“[I]nformation solely on numbers of units sold is insufficient to establish commercial success.”). Without more information, there is insufficient evidence to establish that the tens of thousands of infringing units were a commercial success.

2. Licensing

Patent Owner argues that it has “licensed the ’703 Patent to Interactive Media Corp. (d/b/a ‘Kanguru Solutions’).” PO Resp. 66 (citing Ex. 2113).

Patent Owner’s argument and evidence fall short in several respects. First, Patent Owner has not argued that the licensed products are coextensive with the claims of the ’703 Patent, accordingly, there is no presumption of a nexus. *See Lectrosonics*, Paper 33 at 33.

Second, Patent Owner does not identify or explain any nexus between the challenged claims and the licensing activity. Based on the evidence cited by Patent Owner, the ’703 Patent is one of several patents that were licensed. *See* Ex. 2113 (stating that Kanguru “maintains a licensing agreement for the IOENGINE portfolio” including, amongst several others, the ’703 Patent).

However, there is no evidence linking the demand for the license to the ’703 Patent, as opposed to the other patents in the IOENGINE portfolio.

Third, Patent Owner simply submits a copy of a website indicating that products are licensed, not a copy of the license agreement or any other underlying evidence regarding the circumstances of, or driving forces behind, the license agreements. The mere existence of a license, without more specific information about the circumstances surrounding the license, is not a good indicator of nonobviousness. *See EWP Corp. v Reliance Universal Inc.*, 755 F.2d 898, 907–08 (Fed. Cir. 1985). The current record therefore does not indicate whether these licenses arose out of recognition and acceptance of the claimed subject matter or for some other reason. We note that the company Patent Owner identifies as a licensee—Interactive Media Corp. (d/b/a Kanguru Solutions)—is identified as the Defendant on one of the jury verdicts. *Compare* PO Resp. 66, *with* Ex. 2022. This coincidence suggests that the license may have arisen out of litigation, rather than out of respect for the patent. *See Affinity Labs*, 856 F.3d at 901 (“[T]he mere fact of licensing alone cannot be considered strong evidence of nonobviousness if it cannot also be shown that the licensees did so out of respect for the patent rather than to avoid the expense of litigation.”).

3. Industry Recognition/Skepticism

Patent Owner also argues “the invention of the ’703 Patent was met with skepticism in the industry” and, at the same time, praise. PO Resp. 66. As evidence, Patent Owner directs us to Exhibit 2114.

As discussed below with regard to the evidentiary motions, we grant Petitioner’s motion to exclude Exhibit 2114 and, therefore, there is no evidence supporting Patent Owner’s contention the claimed invention was

met with skepticism and received industry recognition. Accordingly, we give those factors no weight.

However, even if Exhibit 2114 were admissible, Patent Owner has not sufficiently shown a nexus between the objective evidence of nonobviousness and the claimed invention.[18]

According to Petitioner, Exhibit 2114 does not establish a nexus because it "fails to describe the claimed invention in sufficient detail" and "speaks generally about many ideas and fails to establish that the subject of the letter is the invention claimed in the '703 Patent." Paper 37, 3 (citing Ex. 2114, 1–3); *see also* Paper 46, 3 ("Patent Owner does no more than draw vague inferences to the claimed invention. This is not enough.").

Patent Owner argues that a sufficient nexus is shown because Exhibit 2114 discusses the '703 Patent's claims and its embodiments. Paper 41, 9. Specifically, Patent Owner argues that Mr. Harkabi refers to features relating to Figures 5, 6, 7, and 8 of the '703 Patent. *Id.* at 9–10.

In this case, because Patent Owner does not offer any evidence establishing that the claimed invention is coextensive with the product discussed in the letter, there is no presumption of nexus. *See Lectrosonics*, Paper 33 at 33.

Moreover, Patent Owner has not met its burden of establishing a nexus between the industry praise and skepticism purportedly shown in Exhibit 2114 and the claimed invention. Specifically, the sections quoted by Patent Owner to show skepticism are related to an operating system. *See* PO

---

[18] We note that neither party addresses nexus in their substantive briefs. The only discussion of nexus is in connection with Petitioner's Motion to Exclude.

Resp. 66 (citing Ex. 2114, 1). Patent Owner has not argued or presented any evidence that a new operating system is required by the challenged claims of the '703 Patent. *See id.*; *see also* Ex. 2114, 1. Similarly, the language quoted for industry praise is in a section relating to a business plan for working with Pepsi. *Compare* PO Resp. 66 (quoting Ex. 2114, 2), *with* Ex. 2114, 2–3 (section titled "Pepsi"). There is simply no evidence tying those plans to the challenged claims or showing that the claims are coextensive with the business plan. *See Lectrosonics*, Paper 33 at 34 (finding "Patent Owner has not demonstrated a nexus exists between the evidence presented and the merits of the claimed invention because the evidence is directed to features that are not required by the claims.").

4. Conclusion

For these reasons, we give little weight to Patent Owner's evidence purportedly showing commercial success, licensing, industry praise, and skepticism.

I. Petitioner's Motion to Exclude Exhibit 2114

Petitioner moves to exclude Exhibit 2114 as not authenticated under Federal Rule of Evidence 901, hearsay under Rules 801–803, and not relevant under Rules 401 and 402. For the reasons set forth below, we grant Petitioner's motion and exclude Exhibit 2114.

1. Authentication

Petitioner argues that Exhibit 2114 has not been authenticated because it "contains no identification of an author, a recipient, or the genuineness of its contents, and further is not accompanied by testimony attesting to its authenticity." Paper 37, 2 (citing *Linear Tech. Corp. v. Micrel, Inc.*, 275

F.3d 1040, 1055–56 (Fed. Cir. 2001)). Petitioner further argues that any "distinctive characteristics" of Exhibit 2114 are insufficient for authentication and the exhibit is not self-authenticating. *Id.*; Paper 46, 1–2 (citing Wright & Miller, 31 *Fed. Prac. & Proc. Evid*. § 7109 (1st ed.)).

Patent Owner argues that "[t]here are no magic words required to authenticate a document; in fact, '[a]uthentication is a "relatively low[ ] hurdle," and may be proved through a variety of methods, including circumstantial evidence.'" Paper 41, 4 (second and third alterations in original) (quoting *Zen Design Grp., Ltd. v. Scholastic, Inc.*, No. 16-12936, 2019 WL 2996190, at *2 (E.D. Mich. July 9, 2019)). Patent Owner further argues that "Ex. 2114 contains several characteristics evincing its reliability to be what Patent Owner claims it is: an August 2003 letter from Dan Harkabi to Scott McNulty," namely that the letter clearly identifies the author and recipient and references Dan Harkabi's company, MDRM. *Id.* at 5–6. Patent Owner also argues *Linear* is inapposite because, in that case, "the letters were 'not signed, [were] not on company letterhead, and [bore] no outward indicia of having ever been mailed to a customer.'" *Id.* at 7 (alterations in original) (quoting *Linear*, 275 F.3d at 1055).

Federal Rule of Evidence 901(a) states: "To satisfy the requirement of authenticating or identifying an item of evidence, the proponent must produce evidence sufficient to support a finding that the item is what the proponent claims it is."

We find Petitioner's reliance on *Linear* persuasive. In that case, the Federal Circuit affirmed an order excluding certain letters found in the files of a former sales representative which were "not signed, [were] not on company letterhead, and bear no outward indicia of having ever been mailed

to a customer." *Linear*, 275 F.3d at 1055. As in *Linear*, Exhibit 2114 is not signed, and there is no evidence or indicia indicating it was ever mailed. *See* Ex. 2114. Although it has the logo MDRM on it, there is no evidence in the record that the logo is a letterhead or is even a logo of the company that Dan Harkabi worked for. *See generally* Paper 41. Moreover, "[w]hile earlier cases often assumed that the use of letterhead paper is sufficient to establish authenticity, that conclusion is now undermined by the current widespread availability of photocopy machines, scanners, and computer software capable of forging any letterhead." Wright & Miller, 31 *Fed. Prac. & Proc. Evid*. § 7109 (1st ed.) (citing *Total Containment, Inc. v. Environ Prod., Inc.*, 921 F. Supp. 1355, 1370 (E.D. Pa. 1995), *aff'd in part*, *vacated in part*, 106 F.3d 427 (Fed. Cir. 1997)).

In the absence of any supporting testimony, Patent Owner has not met its burden of showing that Exhibit 2114 is what the Patent Owner claims it is.

2. Hearsay

Petitioner argues that Exhibit 2114 is inadmissible hearsay because it is a statement made outside of this *inter partes* review proceeding and being offered for the truth of the matter asserted. Paper 37, 1–2. Petitioner further argues that, although courts allow industry praise into the record over a hearsay objection, that does not apply to an individual's favorable review of a product. Paper 46, 4–5 (citing *Sonos, Inc. v. D&M Holdings Inc.*, No. 14-1330-WCB, D.I. 504, slip op. 6 (D. Del. Dec. 8, 2017) (Bryson, J.)).

Patent Owner argues, "[i]t is well established that, when offered as objective indicia of non-obviousness, neither skepticism nor praise is hearsay because it is not being offered for the truth of the matter asserted."

Paper 41, 1–2 (citing *Sonos*, slip op. 10–12; *Cisco Sys. Inc. v. Centripetal Networks, Inc.*, IPR2018-01437, Paper 40 at 32 (PTAB Jan. 23, 2020) (Final Written Decision)). According to Patent Owner, because Exhibit 2114 is being offered to show the views of the industry and skepticism, it is not being offered for the truth of the matter asserted. *Id.* at 1, 3.

We find Judge Bryson's well-reasoned decision in *Sonos* instructive. *Sonos* draws a distinction between two types of industry praise. On one hand, "to the extent that the evidence is relevant to show that persons in the industry praised Sonos's claimed inventions, such evidence is admissible over a hearsay objection." *Sonos*, slip op. at 6. Thus, for example, "articles describing awards or the equivalent conferred on the patented invention . . . present the clearest examples of evidence of industry praise, at least when it is clear the praise is directed to the merits of the claimed invention." *Id.* at 6–7.

On the other hand, "that principle does not justify the admission of the full text of every document that contains a favorable comment about Sonos or its products from any source. In order to be admissible, *the evidence must reflect praise in the industry, not just an individual's favorable view of the product*." *Sonos*, slip op. at 5 (emphasis added). As a result, "[d]ocuments that reflect simply favorable comments about a company and its products are more problematical" as they are "simply hearsay comments about . . . products." *Id.* at 5, 7.

In this case, Exhibit 2114 reflects personal opinions of the author, Dan Harkabi. *See* PO Resp. 66. Even if Mr. Harkabi was an industry leader, nothing in Exhibit 2114 indicates that he is speaking on behalf of an industry group or presenting an industry award. *See* Ex. 2114. Rather, the

author is merely giving his own personal opinions. *See id.* Thus, Exhibit 2114 is an out-of-court statement being offered for the truth of the matter asserted and is inadmissible hearsay. *See Sonos*, slip op. 5–7.

3. Relevancy

The gravamen of Petitioner's argument regarding the lack of relevancy is that Patent Owner has not shown a sufficient nexus between Exhibit 2114 and the claimed invention. Paper 37, 3 (arguing that Exhibit 2114 does not establish a nexus because it does not "describe the claimed invention in sufficient detail" and "speaks generally about many ideas and fails to establish that the subject of the letter is the invention claimed in the '703 patent" (citing Ex. 2114, 1–3)); *see also* Paper 46, 3 ("Patent Owner does no more than draw vague inferences to the claimed invention. This is not enough."). However, nexus is a substantive requirement, not an evidentiary threshold. Accordingly, we do not address Petitioner's arguments in the context of the Motion to Exclude.

4. Conclusion

For the reasons set forth above, we grant Petitioner's motion to exclude Exhibit 2114 on two separate grounds, insufficient authentication and hearsay.

J. Patent Owner's Motion to Exclude Exhibit 1037

Exhibit 1037 is Petitioner's Reply to Patent Owner's Preliminary Response filed May 14, 2019 in related case IPR2019-00416. Patent Owner moves to exclude Exhibit 1037 as not relevant under Federal Rules of Evidence 401 and 402, as more prejudicial than probative under Rule 403, as

violating the rule against incorporation by reference, 37 C.F.R. § 42.6(a)(3), and as hearsay under Rules 801 and 802. Paper 39, 1–2.

We do not rely on Exhibit 1037 in making our ultimate determination on the patentability of the challenged claims. Accordingly, we need not decide Patent Owner's motion, and we dismiss that motion as moot.

K. Constitutional Challenges

Patent Owner raises two constitutional challenges. First, Patent Owner argues that "[t]he Board cannot Constitutionally decide this case" because "APJs are principal officers under the Appointments Clause" but "are not appointed by the President and confirmed by the Senate," and the Federal Circuit's remedy in *Arthrex*[19] is "inadequate to cure the Constitutional violation." PO Resp. 66–67. Second, Patent Owner argues that retroactive application of IPRs to pre-AIA patents, such as the '703 Patent, violates the Takings and Due Process Clauses of the Fifth Amendment, asserting "IPRs are more akin to civil litigation than prior PTO proceedings," like reexamination, "[y]et[] an IPR does not give the patentee the same rights as civil litigation" because of the lower burden of proof in IPRs as compared with civil litigation. *Id.* at 67–68.

With regard to the Appointments Clause challenge, the issue has been addressed by the Federal Circuit's decision in *Arthrex*, 941 F.3d at 1337 ("This as-applied severance . . . cures the constitutional violation."); *see also Arthrex, Inc. v. Smith & Nephew, Inc.*, 953 F.3d 760, 764 (Fed. Cir. 2020) (Moore, J., concurring in denial of rehearing) ("Because the APJs were constitutionally appointed as of the implementation of the severance, *inter*

---

[19] *Arthrex, Inc. v. Smith & Nephew, Inc.*, 941 F.3d 1320 (Fed. Cir. 2019).

partes review decisions going forward were no longer rendered by unconstitutional panels."). Accordingly, we do not consider this issue any further.

With regard to the Takings and Due Process Clause challenge, we note that challenges to retroactive application of IPRs to pre-AIA patents have been addressed by the Federal Circuit in *Celgene Corp. v. Peter*, 931 F.3d 1342, 1357–1363 (Fed. Cir. 2019), *cert. denied* 2020 WL 3405867 (June 22, 2020) (Takings Clause) and *Sound View Innovations, LLC v. Hulu, LLC*, Nos. 2019-1865, 2019-1867, 2020 WL 3583556, *3 (Fed. Cir. July 2, 2020) (non-precedential) (Due Process Clause). Accordingly, we do not consider this issue any further.

III. CONCLUSION

In summary:[20]

Claims	35 U.S.C. §	Reference(s)	Claims Shown Unpatentable	Claims Not Shown Unpatentable
55, 56, 58–63, 65–72, 75, 77, 78, 81–87, 90, 92–98, 101, 103–105, 107–112, 114–121, 124, 126–129	102(b)	Iida	55, 58–63, 67–72, 77, 78, 81–87, 92–98, 103, 104, 107–112, 116–121, 126–129	56, 65, 66, 75, 90, 101, 105, 114, 115, 124
61, 62, 65, 110, 111, 114	103(a)	Iida, Yang		61, 62, 65, 110, 111, 114
57, 106	103(a)	Iida, Shaffer	57, 106	
74, 89, 100, 123	103(a)	Iida, Davis	74, 89, 100, 123	
Overall Outcome			55, 57–63, 67–72, 74, 77, 78, 81–87, 89, 92–98, 100, 103, 104, 106–112, 116–121, 123, 126–129	56, 65, 66, 75, 90, 101, 105, 114, 115, 124

[20] Should Patent Owner wish to pursue amendment of the challenged claims in a reissue or reexamination proceeding subsequent to the issuance of this decision, we draw Patent Owner's attention to the April 2019 *Notice Regarding Options for Amendments by Patent Owner Through Reissue or Reexamination During a Pending AIA Trial Proceeding,* 84 Fed. Reg. 16,654 (Apr. 22, 2019). If Patent Owner chooses to file a reissue application or a request for reexamination of the challenged patent, we remind Patent

IV. ORDER

In consideration of the foregoing, it is hereby:

ORDERED that Petitioner has shown by a preponderance of the evidence that claims 55, 57–63, 67–72, 74, 77, 78, 81–87, 89, 92–98, 100, 103, 104, 106–112, 116–121, 123, and 126–129 of the ’703 Patent are unpatentable;

FURTHER ORDERED that Petitioner has not shown by a preponderance of the evidence that claims 56, 65, 66, 75, 90, 101, 105, 114, 115, and 124 of the ’703 Patent are unpatentable;

FURTHER ORDERED that Petitioner’s motion to exclude Exhibit 2114 is *granted*;

FURTHER ORDERED that Patent Owner’s motion to exclude Exhibit 1037 is *dismissed as moot*; and

FURTHER ORDERED that because this Decision is final, a party to the proceeding seeking judicial review of the Decision must comply with the notice and service requirements of 37 C.F.R. § 90.2.

Owner of its continuing obligation to notify the Board of any such related matters in updated mandatory notices. *See* 37 C.F.R. § 42.8(a)(3), (b)(2).

FOR PETITIONER:

Robert M. Asher
Timothy M. Murphy
Kerry L. Timbers
Lawrence M. Green
Sharona H. Sternberg
Lena M. Cavallo
SUNSTEIN KANN MURPHY AND TIMBERS
rasher@sunsteinlaw.com
tmurphy@sunsteinlaw.com
ktimbers@sunsteinlaw.com
lgreen@sunsteinlaw.com
ssternberg@sunsteinlaw.com
lcavallo@sunsteinlaw.com

FOR PATENT OWNER:

Michael A. Fisher
Derek J. Brader
Robert W. Ashbrook Jr.
Noah M. Leibowitz
Gregory T. Chuebon
Jacob R. Porter
DECHERT LLP
michael.fisher@dechert.com
derek.brader@dechert.com
robert.ashbrook@dechert.com
noah.leibowitz@dechert.com
greg.chuebon@dechert.com
jacob.porter@dechert.com