Trials@uspto.gov
571-272-7822

Paper 45
October 14, 2020

UNITED STATES PATENT AND TRADEMARK OFFICE

BEFORE THE PATENT TRIAL AND APPEAL BOARD

FMC TECHNOLOGIES, INC.,
Petitioner,

v.

ONESUBSEA IP UK LIMITED,
Patent Owner.

IPR2019-00935
Patent 9,945,202 B1

Before KRISTEN L. DROESCH, JAMES A. TARTAL, and KEVIN W. CHERRY, *Administrative Patent Judges.*

TARTAL, *Administrative Patent Judge*.

JUDGMENT
Final Written Decision
Determining All Challenged Claims Unpatentable
Denying Petitioner's Motion to Exclude
35 U.S.C. § 318(a)

We have jurisdiction to conduct this *inter partes* review under 35 U.S.C. § 6. This Final Written Decision is issued pursuant to 35 U.S.C. § 318(a) and 37 C.F.R. § 42.73 (2018). For the reasons discussed below, we determine that a preponderance of the evidence shows that claims 1–15 (the "Challenged Claims") of U.S. Patent No. 9,945,202 B1 (Ex. 1001, "the '202 patent") are unpatentable.

I. INTRODUCTION

A. Summary of Procedural History

FMC Technologies, Inc., ("Petitioner")[1] filed a Petition (Paper 2, "Pet.") requesting an *inter partes* review of the Challenged Claims. We instituted an *inter partes* review of the Challenged Claims on all grounds of unpatentability asserted in the Petition. Paper 7 ("Inst. Dec."). OneSubsea IP UK Limited ("Patent Owner")[2] filed a Patent Owner Response (Paper 14, "PO Resp."). Petitioner filed a Reply to the Patent Owner Response (Papers 24 ("Pet. Reply") (under seal), 37 (publically accessible with redactions)) to which Patent Owner filed a Sur-reply (Paper 26, "PO Sur-reply").

Petitioner filed a Motion to Exclude. Papers 31 ("Mot.") (under seal), 38 (publically accessible with redactions). Patent Owner filed a Response in opposition to the Motion to Exclude (Paper 33, "Mot. Opp."), to which Petitioner filed a Reply (Paper 36, "Mot. Reply").

---

[1] Petitioner identifies TechnipFMC, plc, as an additional real party in interest. Pet. 97.

[2] Patent Owner identifies OneSubsea LLC, Schlumberger Technology Corporation, Schlumberger Holdings Corporation, Schlumberger B.V., Schlumberger Technology B.V., Schlumberger, Ltd., Schlumberger Services, Inc., Cameron Technologies Limited, and Cameron International Corp. as additional real parties in interest. Paper 4, 1.

Oral argument was held and a transcript of the hearing appears in the record. Paper 42 (Tr.). Petitioner bears the burden of proving unpatentability of the Challenged Claims by a preponderance of the evidence, and the burden of persuasion never shifts to Patent Owner. *See* 35 U.S.C. § 316(e) (2012); 37 C.F.R. § 42.1(d) (2017); *Dynamic Drinkware, LLC v. Nat'l Graphics, Inc.*, 800 F.3d 1375, 1378 (Fed. Cir. 2015).

B. Related Proceedings

The parties state that the '202 patent is the subject of *FMC Technologies, Inc. v. OneSubsea IP UK Limited*, 2:18-CV-2459 (S.D. TX.). Pet. 97; Paper 4, 1.

C. The '202 Patent

The '202 patent, titled "Protected Annulus Flow Arrangement for Subsea Completion System," issued September 17, 2018, from U.S. Application No. 15/470,099, filed March 27, 2007. Ex. 1001, codes (21), (22), (45), (54). The '202 patent generally describes "a system and methodology . . . that protect potentially susceptible components from unwanted exposure to well fluids or other fluids in a monobore subsea installation." *Id.* at 1:29–32. The '202 patent explains as background that "subsea equipment may comprise subsea completion systems which may include or work in cooperation with subsea installations mounted over a wellhead," and that "subsea installations may comprise various components, e.g. tubing hangers and subsea trees, and may incorporate fluid flow paths, e.g. a production flow path and an annulus flow path." Ex. 1001, 1:13–20.[3]

[3] We generally use "completion" and "installation" interchangeably.

"[A] vertical monobore subsea tree has a central production bore through the subsea tree rather than a production bore at a radially offset position as found in dual bore subsea trees." *Id.* at 2:29–32. The '202 patent further explains that a traditional monobore subsea well installation provides an "annulus flow path" through an "open plenum region" located "between a top of a tubing hanger and a bottom of the subsea tree," which may "expose a variety of components to potentially deleterious well fluids or other fluids." Ex. 1001, 1:17–25. To address this, the '202 patent describes an "annulus stab (or stabs) . . . positioned to extend between the tubing hanger and the subsea tree so as to provide an isolated annulus flow path within the annulus stab and through the plenum region." *Id.* at 1:34–37. The "isolated annulus flow path within the annulus stab" may also be "defined, in part, by a passageway extending longitudinally through the tubing hanger until exiting through a side of the tubing hanger." *Id.* at 1:38–41.

Figure 2 of the ’202 patent, colorized by Patent Owner, is reproduced below and illustrates an embodiment of the claimed invention. Paper 6, 12.

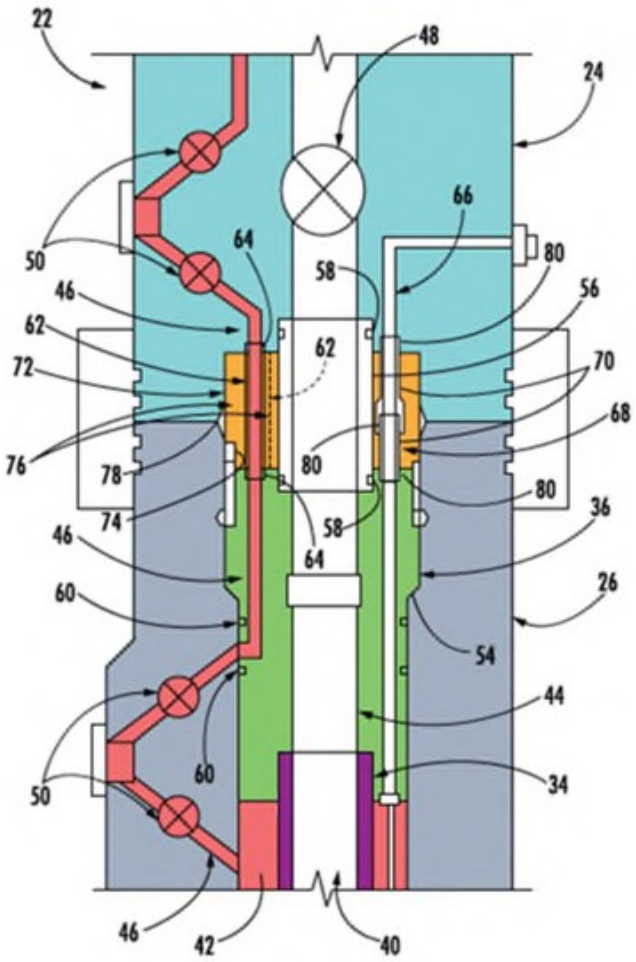

FIG. 2

Figure 2 “is a cross-sectional illustration of a portion of a subsea installation showing an embodiment of a subsea tree interfaced with a tubing hanger and having a production path and an annulus path routed through the subsea installation, according to an embodiment of the disclosure [of the ’202 patent].” *Id.* at 2:63–67. Figure 2 illustrates subsea installation 22 with subsea tree 24 (blue) mounted on tubing head spool 26 (grey) and tubing hanger 36 (green) suspended in tubing head spool 26 via abutment 54. Ex. 1001, 3:51–54; Paper 6, 11.

Installation production flow passage 44 extends generally along a centerline in a monobore configuration with production stab 56 enabling fluid communication between tubing hanger 36 and subsea tree 24. Ex. 1001, 3:55–60. Annulus flow passage 46 (red) is in communication with annulus flow passage 42 (also red) located between production tubing 34 (purple) and well casing 38 (not shown) at tubing head spool 26. *Id.* at 4:1–4. "Fluid communication along flow passage 46 between tubing hanger 36 and subsea tree 24 may be enabled via an annulus stab 62." *Id.* at 4:13–15. "The stabs 56, 62 may be in the form of tubing sections or other suitable structures which extend between the sections of the annulus flow passage 46 in the tubing hanger 36 and in the subsea tree 24." *Id.* at 4:22–25.

The '202 patent further explains as follows:

> The use of stabs such as production stab 56 and annulus stabs 62 provides a protected flow path for well fluids through a plenum region 72 [(orange)]. Various components 74, e.g. sensors, electronics, seals, and other components susceptible to the deleterious effects [of] well fluid, may be positioned in or along the plenum region 72. The stabs, e.g. stabs 56, 62, provide isolation and protection for these components 74 by containing both the production flow and annulus flow of fluids along the interior of subsea installation 22.
>
> Because of the annulus stab or stabs 62, a gallery area 76 is formed in the plenum region 72. . . . Once the stabs 56, 62 are properly sealed in place, this gallery area 76 is no longer part of the annulus fluid flow path and is protected from exposure to well fluids flowing along the annulus fluid flow path within passage(s) 46.

Id. at 5:12–31.

D. Illustrative Claim of the '202 Patent

The '202 patent claims 1 and 9 are independent and directed to a "system," claims 2–8 depend from claim 1, and claims 10–15 depend from claim 9. Ex. 1001, 6:40–8:21. Claim 1, reproduced below, is illustrative of the claimed subject matter.

> 1. A system for use in a subsea well application, comprising:
> a monobore subsea installation having:
> a tubing head spool disposed above a wellhead;
> a tubing hanger engaged with the tubing head spool;
> a subsea tree coupled to the tubing head spool over the tubing hanger and forming a plenum region between the tubing hanger and the subsea tree;
> a production stab extending between the tubing hanger and the subsea tree, the production stab being sealed with respect to both the tubing hanger and the subsea tree;
> an annulus stab extending between the tubing hanger and the subsea tree to provide an isolated path within the stab and through the plenum region, the isolated path further being routed through the subsea tree, through the annulus stab, and through the tubing hanger until exiting out through a side of the tubing hanger to the tubing head spool to accommodate an annulus flow path along the monobore subsea installation; and
> a plurality of valves disposed along the isolated path, the plurality of valves comprising at least one valve in the subsea tree along the isolated path and at least one valve in the tubing head spool along the isolated path.

Id. at 6:40–6:65.

E. References and Testimony

Below we provide an abbreviated summary of the background of several witnesses who provide testimony on behalf of one of the parties in this case. We also provide a table identifying the primary references relied

upon, as well as the exhibits corresponding to the declarations and deposition testimony in the record for those witnesses.[4]

Petitioner's contentions are primarily supported by William C. Parks.[5] Mr. Parks has a Bachelor of Science degree in Mechanical Engineering and a Bachelor of Business Administration, and was President of Technology Development and Co-Founder of a company where he "focused on the development of deepwater subsea technology for over 18 years," prior to which he held various engineering positions involving "subsea oil and gas drilling, completion, production and intervention systems and equipment," amounting to over forty years of related experience. Ex. 1003 ¶¶ 1–3.

Patent Owner's arguments are primarily supported by Robert K. Voss, Joseph Wilhelmi, and Dean Winckler. Mr. Voss has a Bachelor of Science in Mechanical Engineering and was Chief Consulting Engineer at a company where he "was responsible for the worldwide technical oversight of product technology for Subsea Tree and Intervention Systems, which included responsibility for Product Safety, Field Issue Resolution, Enterprise Risk, Product Training, IP & Patent review, and Controlled Title administration," amounting to over forty years of related experience. Ex. 2001 ¶¶ 4, 5. Mr. Wilhelmi is employed by Patent Owner as a System Engineer with experience in "the design and sales of deepwater subsea tree installations" and has a Bachelor of Science in Mechanical Engineering.

---

[4] The table provided identifies only a select number of documents. A complete identification of the papers and exhibits that form the record of this case is available in the docket of this proceeding.

[5] Petitioner also provides a Declaration of William Mark Richards (Ex. 1018) concerning the availability of Exhibit 1009, and a Declaration of Jacob Robert Munford (Exhibit 1029) concerning the availability of Exhibit 1009.

Ex. 2009 ¶¶ 2, 3, 5. Mr. Winckler is employed by Patent Owner as Global Account Director with experience in client account services. Ex. 2031 ¶ 2.

References and Witness Testimony	Date	Ex. No.
U.S. Patent No. 8,316,946 B2 ("June '946")[6]	Nov. 27, 2012	Ex. 1004
U.S. Patent No. 9,279,308 B2 ("June '308")	Mar. 8, 2016	Ex. 1005
U.S. Patent No. 7,331,396 B2 ("Reimert")	Feb. 19, 2008	Ex. 1006
American Petroleum Institute, Design and operation of Subsea Production Systems–Subsea Wellhead and Tree Equipment, ANSI/API Specification 17D, Second Edition, (including "Errata" dated September 2011, January 2012, June 2013, July 2013, and October 2013, and "Addendum" dated September 2015) ("API 17D")	May 2011 to Sep. 2015	Ex. 1007
U.S. Patent No. 8,393,354 B2 ("June '354")	Mar. 12, 2013	Ex. 1008
Cameron Iron Works, Inc., Composite Catalog of Oil Field Equipment & Services, 35th Revision ("Cameron")	1982–83	Ex. 1009
U.S. Patent No. 8,167,049 B2 ("Donald")	May 1, 2012	Ex. 1010
Declaration of William C. Parks	Apr. 11, 2019	Ex. 1003
Reply Declaration of William C. Parks	Apr. 14, 2020	Ex. 1032
Deposition Transcript of William C. Parks	Jan. 9, 2020	Ex. 2005
Declaration of Robert K. Voss	Jul. 16, 2019	Ex. 2001
Supplemental Declaration of Robert K. Voss	Jan. 21, 2020	Ex. 2004
Deposition of Robert K. Voss	Apr. 3, 2020	Ex. 1036

[6] Petitioner refers to June '946 as "June," but we use "June '946" to distinguish the reference more clearly from "June '308" and "June '354."

References and Witness Testimony	Date	Ex. No.
Declaration of Joseph Wilhelmi	Jan. 21, 2020[7]	Ex. 2009[8]
Supplemental Declaration of Joseph Wilhelmi	Feb. 10, 2020	Ex. 2028
Deposition of Joseph Wilhelmi	Mar. 27, 2020	Ex. 1037[9]
Declaration of Dean Winckler	Feb. 2, 2020	Ex. 2030[10]

F. The Asserted Grounds of Unpatentability

Petitioner alleges unpatentability of the Challenged Claims on the following grounds:

Claim(s) Challenged	35 U.S.C. §	Reference(s)
1–7	103	June ’946
8	103	June ’946, June ’308
9, 10, 12–15	103	June ’946, Cameron
11	103	June ’946, Cameron, June ’308
9, 10, 12–15	103	June ’946, API 17D, June ’354
11	103	June ’946, API 17D, June ’354, June ’308
1–7, 9, 10, 12–15	103	Reimert, Donald, Cameron
8, 11	103	Reimert, Donald, Cameron, June ’308

Pet. 1–2.

[7] Mr. Wilhelmi clarified the correct date of signature of Exhibit 2009 is January 21, 2020. Ex. 2029 ¶ 3.
[8] Exhibit 2009 was filed under seal and a redacted, publically accessible version was filed as Exhibit 2018.
[9] Exhibit 1037 was filed under seal and a redacted, publically accessible version was filed as Exhibit 2032.
[10] Exhibit 2030 was filed under seal and a redacted, publically accessible version was filed as Exhibit 2031.

II. ANALYSIS OF PETITIONER'S MOTION TO EXCLUDE

Petitioner moves to exclude Exhibits 2009–2016, each of which was filed subject to a motion to seal, and their corresponding redacted, publically accessible versions, Exhibits 2018–2025. Mot. 1. Petitioner states that each exhibit was the subject of a timely objection. *Id.* (citing Papers 15, 16). Petitioner, as the "moving party," "has the burden of proof to establish that it is entitled to the requested relief." 37 C.F.R. § 42.20. Patent Owner argues broadly that the Motion should be denied because Petitioner's objections "failed to specifically identify the portions of several of the exhibits to which it purports to object." Mot. Opp. 1. As Patent Owner notes, an "objection must identify the grounds for the objection with sufficient particularity to allow correction in the form of supplemental evidence." 37 C.F.R. § 42.64(b)(1); Mot. Opp. 2. We have reviewed Petitioner's objections and are not persuaded that they lack sufficient particularity as the objections identify each exhibit, the basis for the objection, and an explanation that is sufficiently detailed to inform Patent Owner of the basis for the objection.[11] *See* Paper 15. For the reasons that follow, we deny the motion to exclude.

A. Exhibit 2009 (Exhibit 2018)

Exhibit 2009 (and the corresponding redacted, publically accessible version, Exhibit 2018) is the Declaration of Joseph Wilhelmi composed of fifty numbered paragraphs supporting Patent Owner's arguments concerning

[11] Patent Owner also suggests that Petitioner's second set of objections (Paper 16) are "improper and should be expunged." Mot. Opp. 2. Patent Owner never sought to exclude Paper 16 and may not use an opposition to a motion to request relief it did not properly seek through a motion. *See* 37 C.F.R. § 42.64(b)(1) (providing that "Relief . . . must be requested in the form of a motion.").

objective indicia of nonobviousness. Petitioner objected to paragraphs 10–50 of Exhibit 2009 comprising essentially the entirety of the substantive testimony in the declaration. Paper 15, 1–2.

First, Petitioner moves to exclude paragraphs 10–50 of Mr. Wilhelmi's declaration under Fed. R. Evid. 702 because he "lacks the technical or specialized knowledge required to opine" on the matters addressed in his declaration, having conceded he is not a "tree designer" or a person of ordinary skill in the art. Mot. 2. According to Petitioner, Mr. Wilhelmi "refused to answer basic questions about his opinions on the basis that he is not qualified as an expert on such topics." *Id.* at 2 (citing Ex. 1037, various).

Patent Owner responds by arguing that "Mr. Wilhelmi's testimony is not being offered as expert testimony or opinion," but rather, "[p]ursuant to [Fed. R. Evid.] 701, Mr. Wilhelmi may offer testimony that is 'rationally based' on his perception." Mot. Opp. 3. On its face, Patent Owner's argument that Mr. Wilhelmi's testimony is not being offered as "opinion" is not credible, because Mr. Wilhelmi's declaration expressly states "[i]t is my *opinion* that [Patent Owner's] HPHT tree assemblies are within the scope of the claims of the '202 Patent." Ex. 2009 ¶ 34 (emphasis added); *see also id.* ¶ 36 (stating that "[i]t is my opinion that [Patent Owner's] HPHT tree assemblies are also within the scope of Claim 9 of the '202 Patent."). Patent Owner also directs us to a nonprecedential Board decision that did not exclude testimony from an executive as a lay witness as to whether certain products had certain features recited in the claims at issue. Mot. Opp. 4 (citing *Shimano Inc. v. Globeride, Inc.*, IPR2015-00273, Paper 40, 41 (PTAB June 16, 2016). We have reviewed that decision and the declaration

at issue and find the reasoning inapplicable to this case, because, among various reasons, the declarant in that case did not express an "opinion," but merely confirmed very specific claimed features were present in certain products based on his personal knowledge.

Under the specific circumstances of this case, Petitioner seeks to exclude not a limited portion of Mr. Wilhelmi's declaration, but essentially all of it, portions of which appear to be based on his personal knowledge and other portions of which are clearly opinion testimony. Rather than parse the arguments advanced by Petitioner based on our own line-by-line review of the exhibit at issue, we find it was Petitioner's burden to show it was entitled to the relief it requested, and Petitioner fails to meet that burden.

Second, Petitioner moves to exclude paragraphs 29–40 of Mr. Wilhelmi's declaration under Fed. R. Evid. 401–403 "because they include unsupported assertions regarding the content of various exhibits with respect to the claimed features of the '202 [patent]." Mot. 3. According to Petitioner, "paragraphs 29-40 include statements that are unreliable, prejudicial, and misleading, and are inadmissible under [Fed. R. Evid.] 401-403." *Id.* at 4.

Third, Petitioner moves to exclude paragraphs 21, 28, 29, 31, and 33 of Mr. Wilhelm's declaration under Fed. R. Evid. 602, 801, and 901, because Mr. Wilhelmi allegedly relied on "one or more of Exhibits 2010–2016, which are inadmissible hearsay and unauthenticated." *Id.*

Patent Owner argues in opposition that "the Board is highly capable of reviewing all of the evidence and testimony and determining the appropriate level of weight to give each item." Mot. Opp. 4–5. We also note that Petitioner deposed Mr. Wilhelmi and entered that testimony into

the record, but does not seek to exclude it. *See* Ex. 1037. We find that Petitioner's broad attack against Mr. Wilhelmi's declaration under Fed. R. Evid. 401–403 lacks the specificity necessary to establish it is entitled to the relief it seeks and that the issues Petitioner raises may be addressed in our consideration of the weight to be given to the testimony.

B. Exhibit 2010 (Exhibit 2019)

Exhibit 2010 (and the corresponding redacted, publically accessible version, Exhibit 2019) is labeled "2014 Executive Sponsor Meeting" and reflects an agenda, discussion topics, and action items from a meeting between Patent Owner and a client. Petitioner states that it objected to the exhibit under Fed. R. Evid. 801 and 401–403. *Id.* (citing Paper 15, 2–3).

First, Petitioner moves to exclude the exhibit because it contains statements cited by Mr. Wilhelmi in his declaration that are allegedly "hearsay to which no valid exception applies." *Id.* Petitioner argues these statements are attributed to a person not employed by Patent Owner who "is not being provided to testify," and that the statement is relied upon by Patent Owner for the truth of the matter asserted. *Id.* at 4–5. Petitioner further asserts that the exhibit is an out-of-court statement, which incorporates an out-of-court statement by that person, and that in such circumstances the Board has excluded business meeting minutes. *Id.* at 5 (citing *Neste Oil OYJ v. Reg. Synthetic Fuels LLC*, IPR2013-00578, Paper 52, 6-8 (PTAB March 12, 2015).

Patent Owner argues that the exhibit is admissible as a business record under Fed. R. Evid. 803(6)(B) and that the statement recorded in the meeting minutes is admissible under Fed. R. Evid. 803(1) as a present sense impression. Mot. Opp. 10. Petitioner argues in reply that Patent Owner

"never provides any explanation that the statement of the third-party executive is a present sense impression." Mot. Reply 2–3.

Second, Petitioner moves to exclude the exhibit under Fed. R. Evid. 401-403, because "it is incomplete, lacks relevance, and is more prejudicial than probative." *Id.* at 6–7. According to Petitioner, it lacks relevance because it "does not include any statements regarding the '202 patent" and lacks completeness because it lacks "sufficient context." *Id.* Patent Owner argues that the exhibit need not mention the '202 patent to be relevant and that it properly pertains to Patent Owner's arguments concerning indicia of nonobviousness. Mot. Opp. 11–12.

We find, though a close-call, that under the circumstances of this case the nature of the statement of the executive at issue is sufficient to qualify as a present sense impression. We further find that Petitioner fails to show that the exhibit should be excluded under Fed. R. Evid. 401–403, because it is relevant to matters at issue in this proceeding and was not shown to be incomplete or more prejudicial than probative.

C. Exhibits 2011–2016 (Exhibits 2020–2025)

Exhibits 2011–2016 (and the corresponding public versions, Exhibits 2020–2025) may generally be described as engineering reports and drawings related to Patent Owner's projects and products the purportedly support Patent Owner's contention that its product practices claims of the '202 patent for purposes of supporting Patent Owner's arguments related to objective indicia of nonobviousness. Petitioner objected to these exhibits. Paper 15, 3–6.

First, Petitioner moves to exclude these exhibits as hearsay, citing Fed. R. Evid. 801, because Patent Owner purportedly did not provide

evidence "demonstrating that the exhibits fall under any hearsay exception." Mot. 7. Petitioner also argues that these exhibits "have not been authenticated and have not been shown to be self-authenticating," and that Mr. Wilhelmi has not established personal knowledge "regarding the creation, storage, and content of these exhibits." *Id.* at 7–8 (citing FRE 901). Petitioner fails to persuasively show why the declaration provide by Mr. Wilhelmi is insufficient to authenticate the exhibits at issue. *See* Ex. 2028.

Second, Petitioner moves to exclude theses exhibits under Fed. R. Evid. 401-403, because "they lack relevance, are more prejudicial than probative, and confusing, misleading or needlessly present cumulative evidence." *Id.* at 8. We find Petitioner fails to satisfied its burden of showing it is entitled to the relief requested. Patent Owner sufficiently establishes that the exhibits are business records, were sufficiently authenticated as such, and are relevant to the issue of objective indicia of nonobviousness in this case. *See* Mot. Opp. 13–14.

III. ANALYSIS OF PATENTABILITY

A. Principles of Law

Petitioner contends under eight grounds that claims of the '202 patent are unpatentable based on obviousness. Pet. 1–2. A patent claim is unpatentable as obvious if "the differences between" the claimed subject matter "and the prior art are such that the subject matter as a whole would have been obvious at the time the invention was made to a person having ordinary skill in the art to which said subject matter pertains." 35 U.S.C.

§ 103(a).[12] An invention "composed of several elements is not proved obvious merely by demonstrating that each of its elements was, independently, known in the prior art." *KSR Int'l Co. v. Teleflex Inc.*, 550 U.S. 398, 418 (2007).

The question of obviousness is resolved on the basis of underlying factual determinations, including: (1) the scope and content of the prior art; (2) any differences between the claimed subject matter and the prior art; (3) the level of skill in the art; and (4) objective evidence of nonobviousness. *Graham v. John Deere Co.*, 383 U.S. 1, 17–18 (1966). An obviousness determination "cannot be sustained by mere conclusory statements; instead, there must be some articulated reasoning with some rational underpinning to support the legal conclusion of obviousness." *KSR*, 550 U.S. at 418 (quoting *In re Kahn*, 441 F.3d 977, 988 (Fed. Cir. 2006)); *see In re Magnum Oil Tools Int'l, Ltd.*, 829 F.3d 1364, 1380 (Fed. Cir. 2016). Rather, "it can be important to identify a reason that would have prompted a person of ordinary skill in the relevant field to combine the elements in the way the claimed new invention does." *Id.*

B. Level of Ordinary Skill in the Art

In determining whether an invention would have been obvious at the time it was made, 35 U.S.C. § 103 requires us to resolve the level of ordinary skill in the pertinent art at the time of the invention. *Graham*,

---

[12] The Leahy-Smith America Invents Act ("AIA"), Pub. L. No. 112-29, 125 Stat. 284, 287–88 (2011), amended 35 U.S.C. § 103 effective March 16, 2013. We quote the AIA version of 35 U.S.C. § 103, which applies to applications with an effective filing date after March 16, 2013, however, the pre-AIA version of § 103 is nearly identical and any differences do not affect our analysis here.

383 U.S. at 17. The person of ordinary skill in the art is a hypothetical person who is presumed to have known the relevant art at the time of the invention. *In re GPAC, Inc.*, 57 F.3d 1573, 1579 (Fed. Cir. 1995).

Petitioner contends that a person of ordinary skill in the art to which the ’202 patent pertains would have included a professional with an undergraduate degree in mechanical engineering and at least five years of experience in subsea oil and gas completion systems, with the understanding that additional experience may compensate for a deficit in their education. Pet. 3 (citing Ex. 1003 ¶ 8). Patent Owner asserts that Petitioner’s proposed level of ordinary skill requires more experience than necessary, and that “a person who has a bachelor’s degree in mechanical or petroleum engineering and at least three to five years of experience as a completion or sub-surface engineer or related work experience in subsea oil and gas completion systems” would suffice. PO Resp. 10 (citing Ex. 2001 ¶ 11; 2004 ¶ 10).

We discern no substantial difference between the proposed definitions of the parties of a person of ordinary skill in the art that impacts our determination in this Decision. We find that the ’202 patent and the cited prior art references reflect the appropriate level of skill at the time of the claimed invention and that the level of appropriate skill reflected in these references is consistent with the definition of a person of ordinary skill in the art proposed by Patent Owner, which requires marginally less experience than suggested by Petitioner. *See Okajima v. Bourdeau*, 261 F.3d 1350, 1355 (Fed. Cir. 2001).

C. Claim Construction

"In an *inter partes* review proceeding, a claim of a patent . . . shall be construed using the same claim construction standard that would be used to construe the claim in a civil action under 35 U.S.C. 282(b)." *See* Changes to the Claim Construction Standard for Interpreting Claims in Trial Proceedings Before the Patent Trial and Appeal Board, 83 Fed. Reg. 51,340, 51,340, 51,358 (Oct. 11, 2018) (amending 37 C.F.R. § 42.100(b) effective November 13, 2018) (now codified at 37 C.F.R. § 42.100(b) (2019)). That standard "includ[es] construing the claim in accordance with the ordinary and customary meaning of such claim as understood by one of ordinary skill in the art and the prosecution history pertaining to the patent." *Id.*; *see also Phillips v. AWH Corp.*, 415 F.3d 1303 (Fed. Cir. 2005) (en banc). "When a patentee explicitly defines a claim term in the patent specification, the patentee's definition controls." *Martek Biosciences Corp. v. Nutrinova, Inc.*, 579 F.3d 1363, 1380 (Fed. Cir. 2009).

1. "tubing extending between a tubing hanger annulus flow passage in the tubing hanger and a subsea tree annulus flow passage in the subsea tree" (claim 2)

"tube which extends between the tubing hanger annulus flow passage in the tubing hanger and a subsea tree annulus flow passage" (claim 13)

Petitioner contends that "extending between" or "extends between" means the tubing begins "at or in" the annulus flow passage of a tubing hanger and ends "at or in" the annulus flow passage of a subsea tree. Pet. 8–9. Petitioner asserts that its proposed construction "encompasses the '202 patent's embodiments." *Id.* at 8–9 (citing Ex. 1001, Figs 1, 2; Ex. 1003 ¶ 14).

Patent Owner argues that Petitioner "offers no reason for departing from the plain and ordinary meaning," and asserts that "'tubing extending between'/'tube which extends between' are not limited to a minimum length—i.e., the 'tubing'/'tube' are not just long enough to span the distances between the passages as asserted by Petitioner—but are at least that long and may be longer." PO Resp. 15–16 (citing Ex. 1026, 9–15; Ex. 2004 ¶ 75). Patent Owner does not identify where Petitioner argues that the tubing, as claimed, must be "just long enough."

The proposed constructions of the parties appear to be largely in agreement for purposes of this Decision. We determine that "extends between" and "extending between" encompasses an element that either starts and ends at, or goes beyond, the two points defining the distance it must span, and, therefore, is not limited to an element that is "just long enough" to span the required distance. Such a construction is supported, as explained by the parties, by the Specification of the '202 patent. Pet. 8–9 (citing Ex. 1001, Figs. 1, 2); PO Resp. 10–12 (citing Ex. 1001, 4:13–25, Fig. 2).

2. "is placed in communication with" (claim 5)

Petitioner contends that claim 5, which is directed to a "system," requires both apparatus and method limitations, rendering it indefinite, because it also recites "is placed in communication with." Pet. 9. Notwithstanding the alleged indefiniteness, Petitioner further argues that claim 5 may be found unpatentable "because the prior art discloses both the apparatus and method limitations." *Id.* (citing Ex. 1003 ¶ 15).

Patent Owner states in response that "arguments regarding indefiniteness are outside of the scope of these proceedings," and asserts that

"an express construction . . . is not necessary to reach a decision in this matter." PO Resp. 11. We agree with Patent Owner.

3. "at least two valves of the plurality of valves" (claim 7)

Claim 7 depends from claims 1, 2, 4, 5, and 6. Ex. 1001, 6:40–7:2, 7:6–23. Claim 1 recites "a plurality of valves disposed along the isolated path." Claim 6 recites "a plurality of valves disposed along the overall annulus flow passage." Claim 7 recites "wherein at least two valves of the plurality of valves are disposed along the corresponding annulus flow passage through the tubing head spool." Petitioner asserts that "[c]laim 7 is indefinite because it is unclear whether 'the plurality of valves' refers to 'a plurality of valves' in claim 1 or 'a plurality of valves' in claim 6," resulting in a different number of valves depending upon which alternative is applied. Pet. 9. Notwithstanding the alleged indefiniteness, Petitioner further argues that claim 7 may be found unpatentable, because the prior art discloses both alternative constructions. *Id.* (citing Ex. 1003 ¶ 16).

Patent Owner states in response that "arguments regarding indefiniteness are outside of the scope of these proceedings," and asserts that "an express construction . . . is not necessary to reach a decision in this matter." PO Resp. 11. We agree with Patent Owner.

4. "the annulus stab comprises a plurality of annulus stabs" (claims 8, 11)

Claim 8 depends from claim 1 and claim 11 depends from claim 10. Petitioner contends that claims 8 and 11 are indefinite as ambiguous because they "directly conflict" with claims 1 and 10, "which refer to only a single flow path." Pet. 9–10 (citing Ex. 1027, 28–29). Claim 1 recites "an annulus stab . . . to provide an isolated path . . . to accommodate an annulus flow path." Claim 10 recites "an annulus stab . . . to isolate annulus flow."

Claims 1 and 10 do not expressly recite "a single flow path" and Petitioner does not further explain in the Petition how claim 1 and claim 10 "refer to only a single flowpath." Notwithstanding the alleged indefiniteness, Petitioner further argues that in this case "Patent Owner's reading is applied and invalidity can be resolved because the cited prior art discloses each element of claims 8 and 11." Pet. 10 (citing Ex. 1003 ¶ 17). Petitioner fails to set forth in the Petition, which precedes Patent Owner's Response, what Petitioner alleges is "Patent Owner's reading."

Patent Owner states in response that "arguments regarding indefiniteness are outside of the scope of these proceedings," and asserts that "an express construction . . . is not necessary to reach a decision in this matter." PO Resp. 11. We agree with Patent Owner.

5. "annulus" (claims 1–15)

Patent Owner argues that "annulus" means "the primary annulus that is accessed in each installation, the 'A' annulus." PO Resp. 11 (citing Ex. 2004 ¶ 65). Patent Owner does not explain how its proposed construction is necessary to resolve any issue in this proceeding, noting instead, for example, that Petitioner's expert "uses the term annulus to refer to the 'A' annulus." *Id.* at 14 citing Ex. 2005, 88:10–13, 106:3–7, 107:13–17). In reply, Petitioner argues that Patent Owner has not identified "anything in the '202 patent that equates the generic 'annulus' with the 'A' annulus." Pet. Reply 1. Petitioner, however, also does not show how an express construction of "annulus" is necessary to resolve any issue in this proceeding. In presenting its contentions in the Petition, Petitioner addresses claim 1 as requiring an annulus stab on the 'A' annulus. *See, e.g.,* Pet. 23 (arguing that a person of ordinary skill "would have been motivated" to

modify the asserted reference "to provide the annulus stab" on "the 'A annulus flow' path," instead of, or in addition to, the annulus stab used by the reference for the "B annulus flow"). Having raised the issue of how to construe "annulus" in its Response, Patent Owner reverts in its Sur-reply to arguing that Petitioner "attempts to manufacture a dispute where none existed." PO Sur-reply 6–7.

In this regard, the parties also dispute the significance of the language of claim 5 of the '202 patent, which recites "the corresponding annulus flow passage is placed in communication with an annulus between a well tubing and a casing extending down below the tubing hanger to form an overall annulus flow passage through the monobore subsea installation." Ex. 1001, 7:12–16. Patent Owner suggests that this dependent claim language supports its argument, because it "describe[s] the 'annulus' as the annulus between the production tubing and the well casing (e.g., the 'A' annulus)." PO Resp. 13. Petitioner argues the opposite, contending that the applicant "knew how to be more specific" and that claim 5 narrows the "annulus flow path" to one corresponding to an "A" annulus, whereas claim 1 (from which claim 5 depends) contains no such limitation. Pet. Reply 1–2.

Although we agree with Petitioner that the language of claim 5 supports a determination that "annulus" is not limited to the "A" annulus based on claim differentiation, we find no express construction of "annulus" is necessary, because Petitioner presents its challenge as though an annulus stab on the "A" annulus is required by the claims such that Petitioner's unpatentability contentions do not turn on whether "annulus" means "A" annulus. For example, Mr. Parks states that his analysis in support of Petitioner "maps the claimed 'annulus' to the 'A' annulus in prior art

references, but this does not mean the claim term is limited to only the 'A' annulus." Ex. 1032 ¶ 12. Because Petitioner relies on the 'A' annulus as the recited 'annulus' throughout its analysis, there is no dispute that requires resolution of the meaning of "annulus" in this proceeding. *See Nidec Motor Corp. v. Zhongshan Broad Ocean Motor Co.*, 868 F.3d 1013, 1017 (Fed. Cir. 2017) (explaining that claim terms need to be construed "only to the extent necessary to resolve the controversy" (quoting *Vivid Techs., Inc. v. Am. Sci. & Eng'g, Inc.*, 200 F.3d 795, 803 (Fed. Cir. 1999))).

D. Scope and Content of the Prior Art

To demonstrate the unpatentability of the challenged claims of the '202 patent, Petitioner relies on June '946, June '308, Cameron, API 17D, June '354, Reimert, and Donald. Pet. 1–2. A brief summary of each of these references, focused on the teachings relied upon by Petitioner, is provided below.

1. Summary of June '946

June '946, titled "Subsea Completion with a Wellhead Annulus Access Adapter," relates to a subsea completion assembly with an annulus access adapter installed in the wellhead to control fluid communication via manipulatable valve with the fluid in the B annulus between the outside of the production casing and the installed casing. Ex. 1004, codes (54), (57).

Figure 7 of June ’946 annotated by Petitioner is reproduced below:

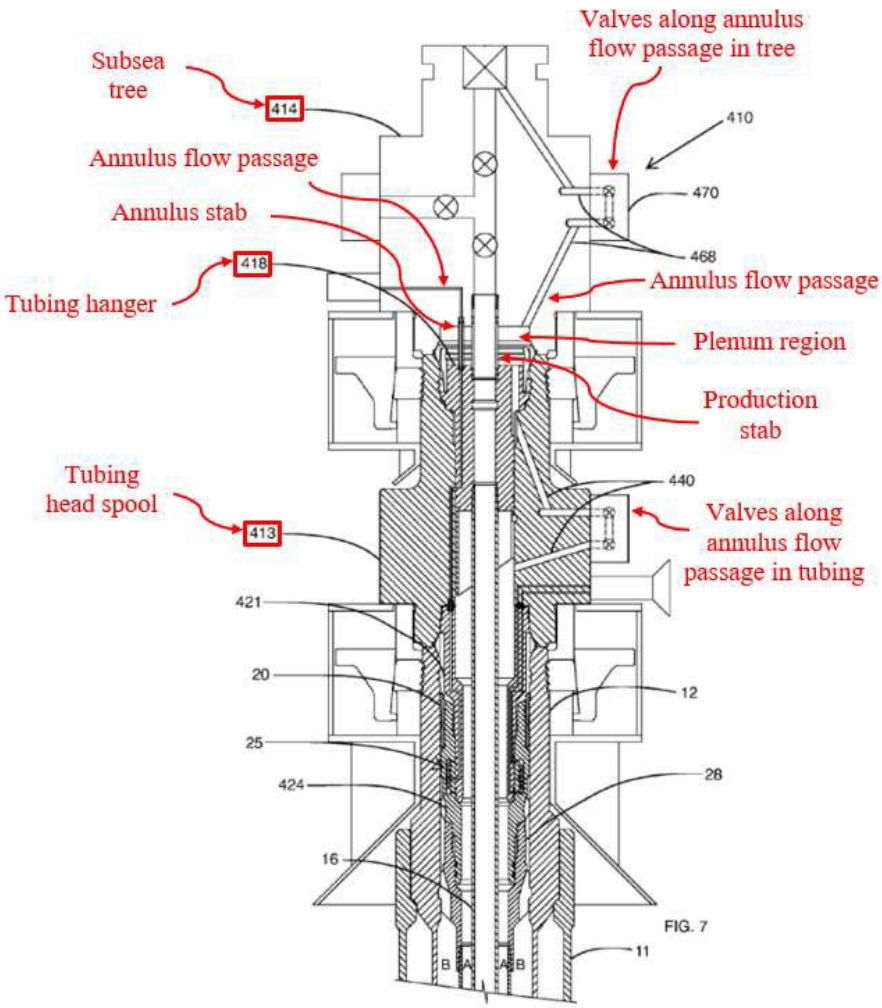

Pet. 12. Figure 7 of June ’946 illustrates “a cross-section view of another embodiment of a subsea completion including an annulus access adapter installed in a wellhead and also including a tubing spool with a vertical tree installed on the tubing spool with a tubing hanger installed in the tubing spool and configured as a monobore completion.” Ex. 1004, 2:36–41. The subsea completion shown in Figure 7 includes assembly 410 with annulus access adapter 424, with vertical tree 414 installed on tubing spool 413, and with monobore completion tubing hanger 418 suspended in tubing spool 413. Ex. 1004, 8:10–22.

Tubing spool 413 provides fluid communication between production tree 414 and the fluid in the B annulus. Ex. 1004, 8:23–26. "Annulus access adapter 424 does not manipulate system flow access for the A annulus." *Id.* at 8:27–30. "A annulus access is provided by porting 440 located in the tubing spool 413 and porting 468 in the tree 414 and is controllable using a valve 470 in the tree 414." *Id.* at 8:30–33. Petitioner identifies the region "between 'tree 414' and 'tubing hanger 418'" as the plenum region. Pet. 11. Petitioner further identifies an unlabeled portion of the production tubing passing through the plenum in Figure 7 of June '946 as a "Production stab" and an unlabeled portion of the B annulus flow passage as an "Annulus stab." Pet. 12.

According to Petitioner, June '946 "describes other completions with multiple annulus stabs." *Id.* at 13. Portions of Figures 4 and 5 of June '946 annotated by Petitioner are reproduced below.

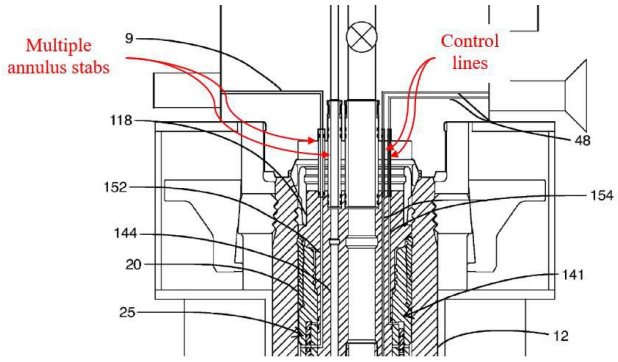

Figure 4 (partial, annotated)

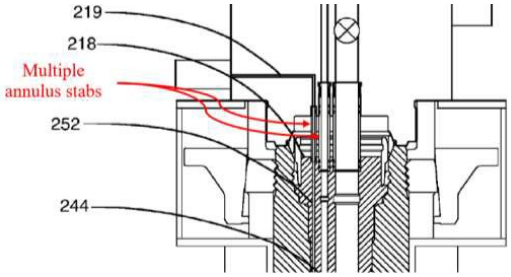

Figure 5 (partial, annotated)

Pet. 13–14. According to Petitioner, Figure 4 "illustrates dual annulus stabs, both between the tree and tubing hanger and both isolating the plenum region from the annulus flow" and "two control lines that connect between the tree and the tubing hanger through the plenum." *Id.* at 13 (citing Ex. 1004, 4:57–5:20, 6:42–7:3). Petitioner further asserts that Figure 5 "shows dual annulus stabs." *Id.* (citing Ex. 1004, 7:4–45).

2. Summary of June '308

June '308, titled "Vertical Completion System Including Tubing Hanger with Valve," relates to a subsea completion system with both a production bore and an auxiliary passage through a tubing hanger, and a valve to control the flow of fluid through the auxiliary passage. Ex. 1005, codes (54), (57). Figure 1A of June '308, as annotated by Petitioner, is reproduced below.

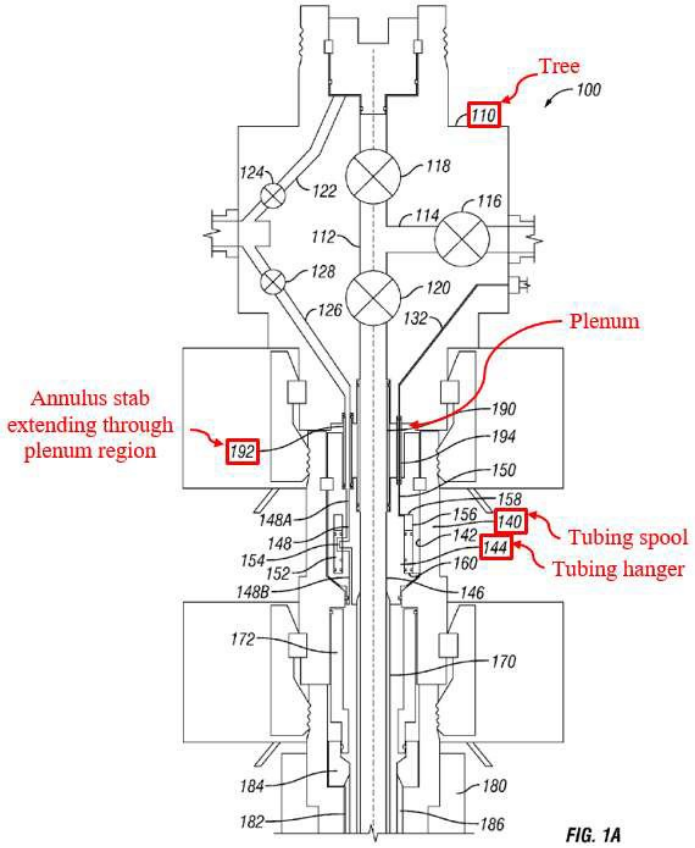

Pet. 42. Figure 1A illustrates a cross-sectional view of completion system 100, including production tree 110, main production bore 112, tubing spool 140, and tubing hanger 144. Ex. 1005, 2:58–67, 3:35–37, 3:43–46. Petitioner identifies a plenum between production tree 110 and tubing hanger 144. Pet. 41. Production bore stab 190 is between the main production bore 112 of production tree 110 and production bore 146 of

tubing hanger 144, which Petitioner contends "extends through the plenum." Pet. 41; Ex. 1005, 5:49–53. June '308 further explains the following:

> Accordingly, to have the bores and passages in the production tree and in the tubing spool within the completion system to be in fluid communication with each other, one or more isolation sleeves, stabs, conduits, tubulars, pipes, channels, mandrels, and/or any other similar component may or may not be used to fluidly couple the bores and passages within the production tree and the tubing spool to each other.
>
> . . .
>
> Further, one or more additional stabs or similar components may be included within the completion system 100, such as positioned about or adjacent the production bore stab 190 to have additional bores and passages of the production tree 110 in fluid communication with the tubing hanger 144. For example, one or more auxiliary passage stabs 192 may be positioned between the auxiliary passage of the production tree 110 and the auxiliary passage 148 of the tubing hanger 144, thereby isolating and fluidly coupling the auxiliary passage of the production tree 110 to the auxiliary passage 148 of the tubing hanger 144.

Ex. 1005, 5:43–49, 5:66–6:9.

3. Summary of Cameron

Cameron, is an excerpt of a publication by World Oil titled "Composite Catalog of Oil Field Equipment & Storage." Ex. 1009. According to Petitioner, Cameron "includes information on oilfield offerings by, among others, Cameron Iron Works (a predecessor to Patent Owner)," including illustrations of "a typical multi-part hydraulic control line connector used in a tubing hanger and its interface with a subsea tree." Pet. 44 (citing Ex. 1009, 1–7; Ex. 1003 ¶¶ 72–73). According to Patent Owner, "Cameron discloses a standard dual-bore vertical tree installation

without a tubing head spool." Prelim. Resp. 62 (citing Ex. 1009, 4; Pet. 72 (stating that "the configuration shown in Cameron is not monobore")).

Figure SD-3275 of Cameron is reproduced below, with annotations in red provided by Petitioner.

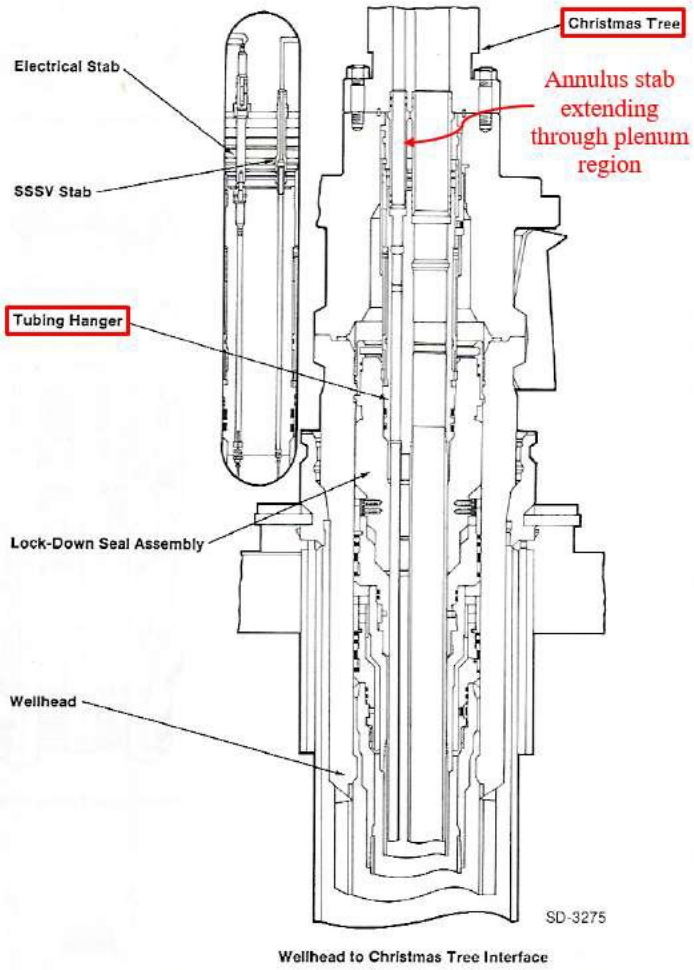

Pet. 45; Ex. 1009, 4. According to Petitioner, Cameron illustrates a plenum between the tree and tubing hanger, as well as "production and annulus stabs that provide isolated paths for production and annulus flow, respectively, through the plenum between the tree and the tubing hanger." Pet. 44. Cameron states that "[t]he tubing hanger is the interface between the subsea wellhead and subsea tree," and that "[m]ale stabs for downhole safety valve control lines and instrumentation face upward." Ex. 1009, 4.

4. Summary of API 17D

API 17D is a publication by the American Petroleum Institute titled "Design and Operation of Subsea Production System–Subsea Wellhead and Tree Equipment," and labeled "ANSI/API Specification 17D." Ex. 1007, 1. Petitioner provides in the Petition an annotated version, reproduced below, of an illustration from API 17D which appears in Table 4, titled "Pressure test pictorial representations."

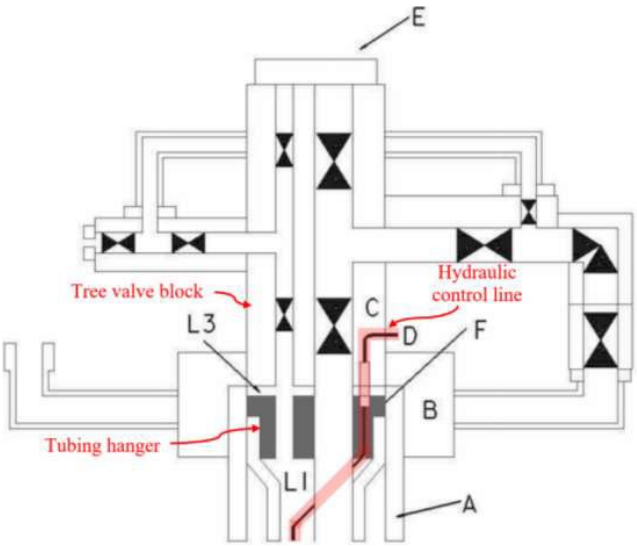

Pet. 49; Ex. 1007, 53. According to Petitioner, the Table 4 illustration shows "a typical 'vertical subsea tree,' with valves and valve block 'C' engaged with tubing head 'B' (tubing head spool), tubing hanger 'E,' and gallery 'L3' (plenum) between the tree valve block and the tubing hanger." Pet. 49–50 (citing Ex. 1003 ¶ 76). Petitioner further states that the Table 4 illustration shows SCSSV control line "D" "extending through the tree, gallery, and tubing hanger to the [surface controlled subsurface safety valve] SCSSV below (valve not shown in the drawing)." *Id.* According to Patent Owner, the Table 4 illustration in API 17D "depicts a dual bore system." PO Resp. 56 (citing Ex. 1007, 53).

5. Summary of June '354

June '354, titled "Self-sealing Hydraulic Control Line Coupling," relates to "a hydraulic fluid control line connector including first and second couplings configured to automatically seal shut when the members are disengaged." Ex. 1008, codes (54), (57).

Figure 2 of June '354, as colorized and annotated by Petitioner, is reproduced below.

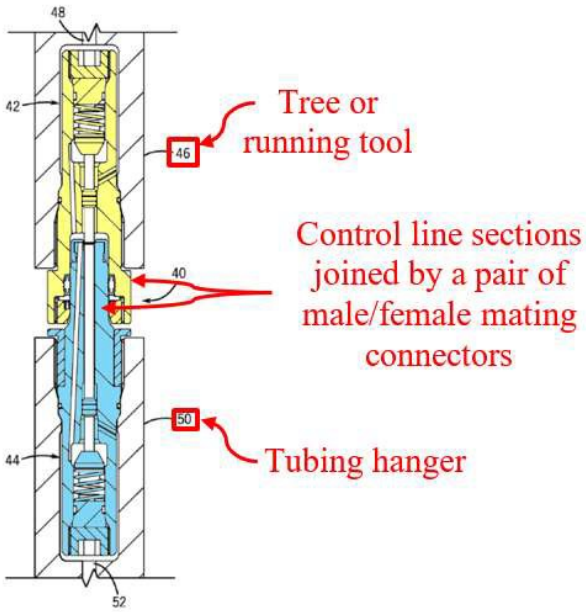

Pet. 58. Figure 2 illustrates "stab-style hydraulic control line coupler 40 that includes a first coupling, such as female stab 42 [yellow] and a second coupling, such as a male stab 44 [blue]." Ex. 1008, 3:27–30. Female stab 42 may be coupled to running tool 46, which includes hydraulic fluid line 48, or to a christmas tree or "any other well component having a hydraulic fluid line running therethrough." *Id.* at 3:30–37. Male stab 44 may be coupled to tubing hanger 50, and "hydraulic fluid line 52 disposed within the tubing hanger 50 may be used to transport hydraulic fluid from the coupler 40 to hydraulic valves or other hydraulically controlled components in a wellhead member." *Id.* at 3:37–44.

6. Summary of Reimert

Reimert, titled "Subsea Production Systems," relates to a subsea production system, including "a well head, a tubing spool, a tubing hanger, an annulus, a production tree, and a bypass flow path." Ex. 1006, codes (54), (57).

Figure 4 of Reimert, as annotated by Petitioner, is reproduced below.

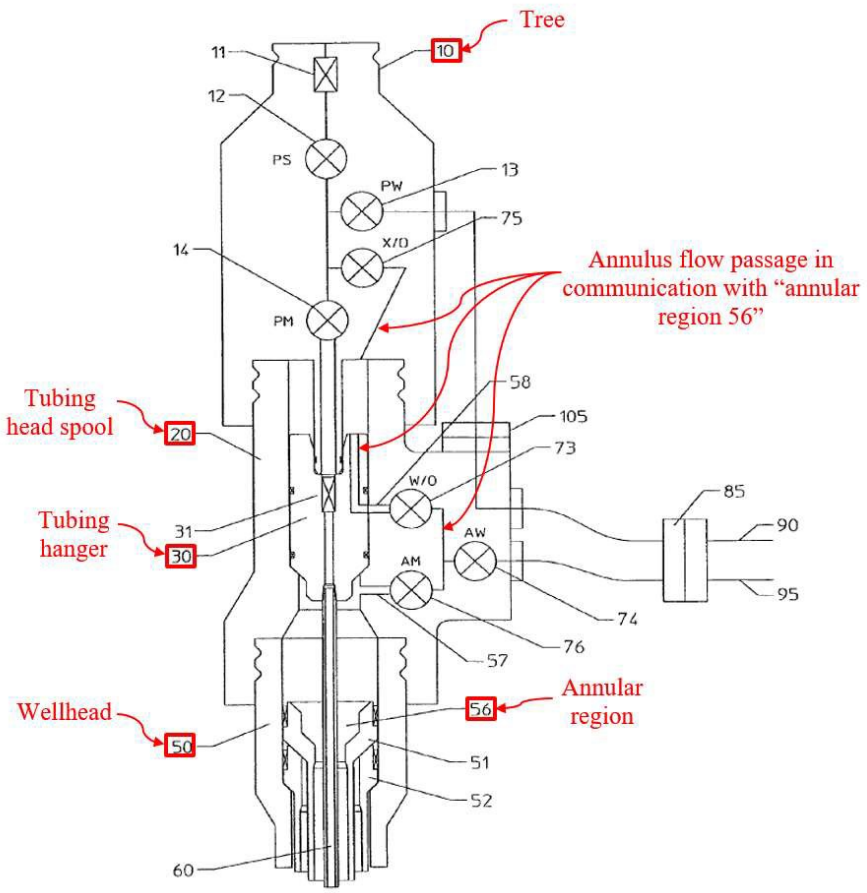

Pet. 63. Figure 4 illustrates "a subsea production system having a cross over valve in the production tree." Ex. 1006, 3:50–52. The system includes production tree 10, spool 20, tubing hanger 30, and well head 50. *Id.* at 4:52–55. Annular region 56 is formed between tubing string 60 and the inner most casing string suspended from casing hanger 51. *Id.* at 5:24–26. Cross over valve 75 is in the production tree and "flow path 58 traverses

through a portion of the tubing hanger and then to the production tree." *Id.* at 6:62–66. According to Petitioner, "Reimert describes various configurations for valves and flow paths within the completion," and Reimert states that "[i]n some examples, the production tree does not have an annulus bore that traverses the production tree." Pet. 63–64; Ex. 1006, 6:24–26.

7. Summary of Donald

Donald, titled "Apparatus and Method for Recovering Fluids from a Well and/or Injecting Fluids Into a Well," relates to "a diverter assembly connected to a wing branch of a tree" for "diverting fluids either into or from a well." Ex. 1010, codes (54), (57). According to Patent Owner, "Donald discloses a standard dual bore vertical tree with required annulus valves in the tree." PO Resp. 70 (citing Ex. 1010, 13:20–36, Fig. 1).

Figure 1 of Donald, as colorized and annotated by Petitioner, is reproduced below.

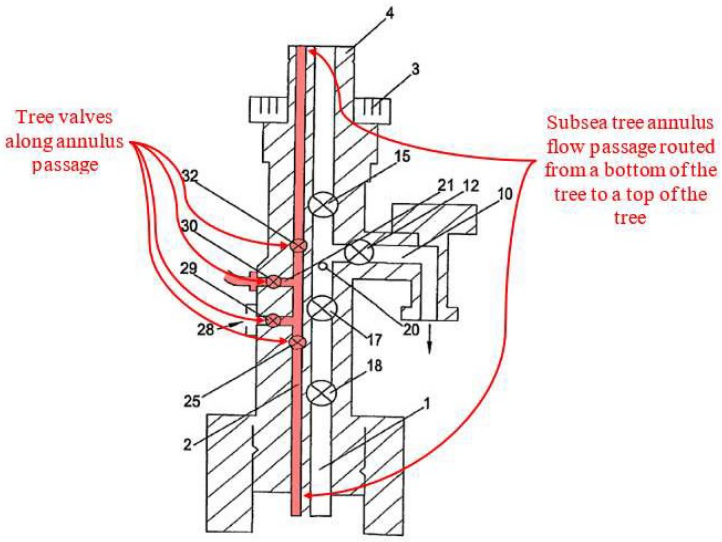

Fig. 1

Pet. 65. Donald Figure 1 illustrates "a side sectional view of a typical production tree." Ex. 1010, 12:53. Figure 1 includes christmas tree cap 4,

production bore 1, and annulus bore 2. *Id.* at 13:6–16. Crossover port (XOV) 20 connects production bore 1 to crossover port (XOV) 21 in annulus bore 2, which may be closed by crossover valve 30. *Id.* at 13:27–30, 33–34. Annulus bore 2 is closed by annulus maser valve (AMV) 25. *Id.* at 13:31–33.

E. Alleged Obviousness Over June '946

Petitioner contends that claims 1–7 of the '202 patent would have been obvious over June '946 and primarily relies upon the subsea completion illustrated in Figure 7 of June '946 (the "Figure 7 Completion"), modified to include a stab on the 'A' annulus. Pet. 10–41; Pet. Reply 2–16. Patent Owner argues primarily that Petitioner's modification is inoperable, "impossible to fabricate," and fails to provide an "isolated path," and that Petitioner fails to show a sufficient rationale for the modification. PO Resp. 16–46; PO Sur-reply 7–16. We consider and address below the arguments and evidence of each party and determine for the reasons provided that Petitioner shows by a preponderance of the evidence that June '946 teaches or suggests every limitation of claims 1–7 of the '202 patent and demonstrates a persuasive rationale in support of the proposed modification.[13]

1. Differences Between the Subject Matter of Independent Claim 1 and the Teachings of June '946

Petitioner provides arguments with citations to where June '946 teaches or suggests the limitations of claim 1, along with citations to the supporting declaration of Mr. Parks. Pet. 14–33 (citing Ex. 1003 ¶¶ 36–55).

---

[13] After addressing each ground of obviousness below, we then consider the objective indicia of nonobviousness before reaching an ultimate conclusion concerning the patentability of the Challenged Claims.

Patent Owner argues that Petitioner has not shown that June '946 teaches or suggests each limitation of claim 1, primarily with regard to the recitations of "annulus stab" and "isolated path." *See* PO Resp. 16–44. We address the arguments of the parties concerning each limitation of claim 1 below.

> *A system for use in a subsea well application, comprising:*
> *a monobore subsea installation comprising: a monobore subsea installation having:*
> *a tubing head spool disposed above a wellhead;*
> *a tubing hanger engaged with the tubing head spool;*
> *a subsea tree coupled to the tubing head spool over the tubing hanger and forming a plenum region between the tubing hanger and the subsea tree;*
> *a production stab extending between the tubing hanger and the subsea tree, the production stab being sealed with respect to both the tubing hanger and the subsea tree;*

Petitioner shows, and Patent Owner does not dispute, that June '946 teaches each of these limitations.[14] Pet. 14–23. Petitioner's contentions are persuasively supported by Mr. Parks. Ex. 1003 ¶¶ 36–43. We find Petitioner shows by a preponderance of the evidence that June '946 teaches or suggests each of these limitations for the reasons that follow.

June '946 describes a "subsea completion assembly for a subsea well," including a "monobore subsea tree," corresponding to the recited "monobore subsea installation." Pet. 14–15 (quoting Ex. 1004, Abstract, 2:28–32). The Figure 7 Completion illustrates subsea completion assembly 410 with vertical tree 414 (a "subsea tree") installed on tubing spool 413 (a "tubing head spool"), monobore completion tubing hanger 418

[14] Patent Owner waived any argument directed to those limitations. *See* Paper 8, 7 ("Patent Owner is cautioned that any arguments for patentability not raised in the response may be deemed waived.").

(a "tubing hanger") suspended in, and, therefore, "engaged with" tubing spool 413, and vertical tree 414 coupled to tubing spool 413 over tubing hanger 418, forming a "plenum region" between tubing hanger 418 and vertical tree 414. *Id.* at 16–20 (citing Ex. 1003 ¶¶ 38–40; Ex. 1004, 2:36–41, 5:35–36, 8:10–22, Fig. 7).

The Figure 7 Completion includes a sealed "production stab" extending between tubing hanger 418 and vertical tree 414. Pet. 20–23 (citing Ex. 1003 ¶¶ 40–43; Ex. 1004, 3:52, 4:1–25, 7:30–32, Figs. 2, 5, 7). Although the Figure 7 Completion does not expressly label the production stab or seals, we find persuasive the testimony of Mr. Parks that identifies these features in the Figure 7 Completion and further explains that "[s]ealing stab connections were commonly used in subsea completions," and that the "production stab is sealed with respect to both the tubing hanger and the subsea tree, because sealing prevents production fluids from comingling with the other fluids in the plenum." Ex. 1003 ¶¶ 42–43.

> *an annulus stab extending between the tubing hanger and the subsea tree to provide an isolated path within the stab and through the plenum region,*

Petitioner states that the Figure 7 Completion "illustrates an annulus stab connecting 'B annulus flow' between 'tubing hanger 418' and subsea 'tree 414' in FIG. 7." Petitioner also contends that Figures 4 and 5 of June '946 illustrated "the use of multiple stabs together" in a different embodiment from the one illustrated in Figure 7. Pet. 23 (citing Ex. 1004, 7:23–32, 8:17–33).

Petitioner does not argue in the Petition that the 'B' annulus stab of June '946 corresponds to the recited "annulus stab" without modification. *Id.* Instead, Petitioner implicitly suggests, without further explanation, that

claim 1 of the ’202 patent requires an annulus stab on the ‘A’ annulus, consistent with Patent Owner’s claim construction argument for “annulus” discussed above. *Id.* We are limited in our consideration of these arguments presented by Petitioner in the Petition, and, therefore, do not reach the issue of whether the annulus stab on the ‘B’ annulus flow taught by June ’946 corresponds without modification to the recited “annulus stab.” We consider Petitioner’s proposed modifications of June ’946 as the only basis for unpatentability asserted by Petitioner in the Petition.

Petitioner proposes modifying the Figure 7 Completion to include an annulus stab for the ‘A’ annulus flow either: (1) by providing the annulus stab for ‘B’ annulus flow in the Figure 7 Completion on the ‘A’ annulus flow path instead, or (2) by providing an annulus stab on the ‘A’ annulus flow path in addition to the existing annulus stab on the ‘B’ annulus flow path, as illustrated by Petitioner in a modified version of the Figure 7 Completion. *Id.* at 23–24. Petitioner also contends that a person of ordinary skill “would have also included seals to ensure fluids in the stab cannot leak into the plenum and vice versa.” *Id.* (citing the additional discussion in the Petition of dependent claim 4 with regard to seals).

Patent Owner argues that the Figure 7 Completion does not show an annulus stab on the A annulus flow path, which Patent Owner notes “Petitioner confirms.” PO Resp. 16–18. Indeed, there is no dispute between the parties that the Figure 7 Completion does not include an annulus stab on the ‘A’ annulus flow path. Further below, separately we discuss the reasons supporting Petitioner’s proposed modification, and Patent Owner’s arguments in opposition. Here, we find that Petitioner shows that its proposed modification of the Figure 7 Completion to include an annulus stab

on the 'A' annulus flow path corresponds to the "annulus stab . . . to provide an isolated path," as recited by claim 1.

> *the isolated path further being routed through the subsea tree, through the annulus stab, and through the tubing hanger until exiting out through a side of the tubing hanger to the tubing head spool to accommodate an annulus flow path along the monobore subsea installation; and,*

Petitioner provides an annotated partial version of the Figure 7 Completion, which we reproduce below, showing how the recited "isolated path" is taught by the Figure 7 Completion when modified to include an annulus stab for the 'A' annulus flow path:

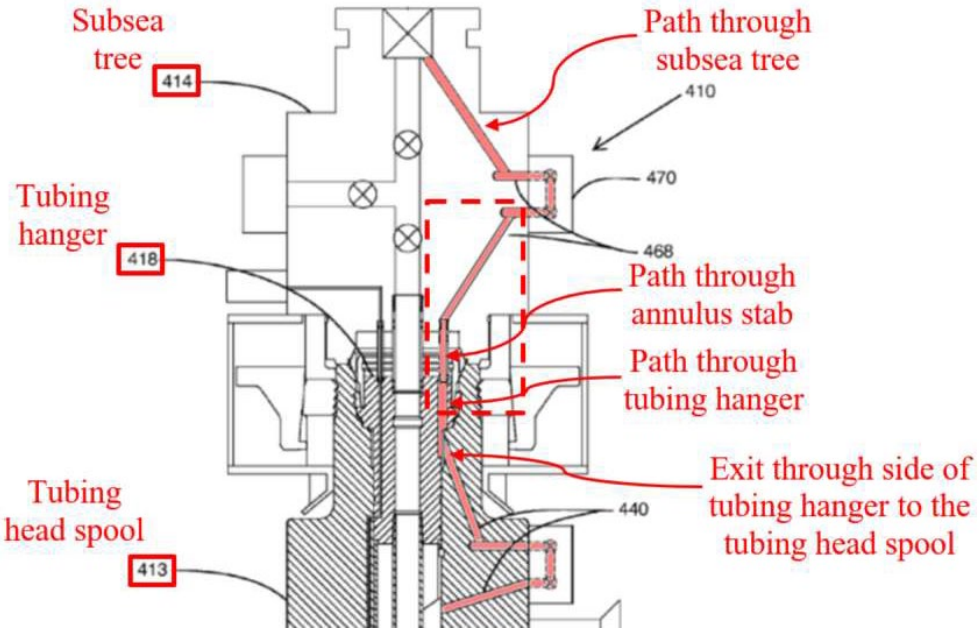

Id. at 30–31 (citing Ex. 1003 ¶ 54; Ex. 1004, Fig. 7). The figure above shows in red an annulus flow path for the 'A' annulus, including the path through the subsea tree, the annulus stab, the tubing hanger, and the tubing head spool. *Id.*

Patent Owner argues that "Petitioner never addresses the fact that even with its proposed modification, an isolated path is never created." PO Resp. 40 (citing Ex. 2005, 117:11–22). We disagree. Petitioner expressly

states in the Petition in regard to the application of June '946 to claim 1 that "[i]n including the 'A' annulus stab, a [person of ordinary skill in the art] would have also included seals to ensure fluids in the stab cannot leak into the plenum and vice versa. *Infra*, [4]." Pet. 24. According to Patent Owner, a person of ordinary skill "would have understood that June '946 does not disclose the need for seals where the annulus flow path transitions between the tubing hanger and the tubing head spool." *Id.* Patent Owner's argument does not address Petitioner's reliance on a modified version of the Figure 7 Completion, including the addition of seals to provide an isolated flow path. *See* Pet. 24.

Moreover, Petitioner addresses in detail how the modified 'A' annulus flow path is "isolated" at the transition point between the tubing hanger and the head spool in detail in the context of dependent claim 4, which depends from claim 1 and requires the "tubing hanger annulus flow passage" be routed "into a sealed region." Petitioner expressly relies on this analysis of claim 4 in its analysis and discussion of claim 1. Pet. 24 (citing "*Infra*, [4]").[15] We find that Petitioner shows by a preponderance of the evidence that the Figure 7 Completion, when modified to include an annulus stab for the 'A' annulus flow path, provides an "isolated path . . . through the subsea tree, through the annulus stab, and through the tubing hanger until exiting out through a side of the tubing hanger to the tubing head spool," as

[15] Patent Owner argues in its Sur-reply that "Petitioner's arguments with respect to Claim 4 are irrelevant to its failure to meet its burden with respect to Claims 1 and 9." PO Sur-reply 14 n.9. Patent Owner is incorrect, because in the Petition Petitioner expressly relies on and cites to its analysis of dependent claim 4 in its analysis of claim 1. Pet. 31.

required by claim 1, which we also address in additional detail below in the context of claim 4.

Patent Owner's arguments in opposition do not persuade us that Petitioner failed to show the Figure 7 Completion, as modified by Petitioner, corresponds to the "isolated path" required by claim 1. PO Resp. 40–44; PO Sur-reply 14–15. Patent Owner directs us to the deposition testimony of Mr. Parks, which we reproduce below. PO Resp. 40 (citing Ex. 2005, 117:11–22); *see also Id.* at 40 n.9 (arguing that "[t]he Petition never addresses the fact that [']A['] annulus fluid may communicate around the exterior of the tubing hanger and never accounts for the need for seals in June 946.") (citing Pet. 30–31).

> Q. The next claim element is a production stab extending between the tubing hanger and the subsea tree, the production stab being sealed with respect to both the tubing hanger and the subsea tree.
>
> And where do you cover that claim element in your declaration?
>
> A. Next sentence, production stab and annulus stab extend through the plenum region, provide isolated flow paths for production flow and annulus flow respectively.
>
> Q. You don't mention the word "sealed."
>
> A. "Isolated" implies that.
>
> Q. That's what "isolated" means, is it's sealed?
>
> A. Yeah.

Ex. 2005, 117:11–118:2. We fail to see how the cited portion of the deposition testimony of Mr. Parks supports Patent Owner's argument, and Patent Owner offers no explanation in its Response. To the contrary, the testimony of Mr. Parks supports Petitioner's contentions, because it explains that an isolated path is necessarily sealed.

Patent Owner also argues that "even with a stab" a person of ordinary skill in the art "would have understood that June [']946 does not disclose the need for seals where the annulus flow path transitions between the tubing hanger and the tubing head spool [the 'transition' or 'juncture']." *Id.* at 40 (citing Ex. 2004 ¶ 143; Ex. 2005, 225:16–18). Patent Owner then refutes its own argument by recognizing that June '946 does, in fact, show seals at the transition in the Figure 7 Completion, but only below the transition, not above. PO Resp. 41. Further, according to Patent Owner, "Petitioner cannot identify any seals above the transition point as June [']946 was specifically designed to allow the 'A' annulus fluids to flow in the space between the tubing hanger and the tubing head spool so as to allow the fluid to reach the plenum." *Id.* at 42 (citing Ex. 1004, 8:6–9). Patent Owner's argument is not persuasive because it is directed to the Figure 7 Completion, without modification, which is not what Petitioner relies upon. Petitioner expressly contends in support of its proposed modification of the Figure 7 Completion that a person of ordinary skill in the art "would have also included seals to ensure fluids in the stab cannot leak into the plenum." Pet. 24.

Moreover, as Petitioner notes, the portion of June '946 Patent Owner relies on to show that June '946 permits "annulus fluids to flow in the space between the tubing hanger and the tubing head spool," concerns an embodiment illustrated in Figure 6 of June '946 that is not the embodiment Petitioner relies on, which is illustrated in Figure 7 of June '946. Pet. Reply 14 n.3. Likewise, the testimony Patent Owner directs us to is from Mr. Parks discussion of the Figure 6 embodiment. PO Resp. 43 (citing Ex. 2005, 157:8–13 (concerning Mr. Parks being questioned about column 8, line 6 of June '946 concerning Figure 6 of June '946). The

testimony of Mr. Voss cited by Patent Owner also relies on the Figure 6 embodiment of June '946 (citing the same disclosure at column 8, line 6). *See* PO Resp. 40–43 (citing Ex. 2004 ¶¶ 143–145, 147). Patent Owner does not explain why the manner in which the Figure 6 embodiment of June '946 operates is relevant to the Figure 7 embodiment Petitioner relies upon, even though Patent Owner had the opportunity to do so in its Sur-reply.

> *a plurality of valves disposed along the isolated path, the plurality of valves comprising at least one valve in the subsea tree along the isolated path and at least one valve in the tubing head spool along the isolated path.*

Petitioner shows, Patent Owner does not dispute, and we agree that the Figure 7 Completion illustrates valve 470 as a valve block with two valves, corresponding to the recited "plurality of valves." Pet. 31–33 (citing Ex. 1003 ¶ 55; Ex. 1004, 8:23–33, Fig. 7).

2. Differences Between the Subject Matter of Dependent Claims 2 and 3 and the Teachings of June '946

Petitioner provides arguments with citations to where June '946 teaches or suggests the limitations of claims 2 and 3, along with citations to the supporting declaration of Mr. Parks. Pet. 33–35 (citing Ex. 1003 ¶¶ 56–57). Claim 2 depends from claim 1 and claim 3 depends from claim 2. Ex. 1001 6:66–7:5. Claim 2 requires that the annulus stab extend "between a tubing hanger annulus flow passage . . . and a subsea tree flow passage." *Id.* at 6:66–7:2. Claim 3 further requires that "the subsea tree annulus flow passage is routed through the subsea tree from a bottom of the subsea tree to a top of the subsea tree." *Id.* at 7:3–5.

Petitioner shows that the Figure 7 Completion, as modified by Petitioner to include an annulus stab on the 'A' annulus, satisfies the limitations of claims 2 and 3, as shown in the annotated figures provided by

Petitioner and supported by Mr. Parks. Pet. 33–35; Ex. 1003 ¶¶ 56–57; Ex. 1004, Fig. 7. Patent Owner does not argue that the Figure 7 Completion, as modified by Petitioner, fails to teach or suggest the additional limitations of claims 2 and 3. *See* PO Resp. 44 (asserting that "June [']946 does not render obvious independent Claim 1 and, thus, June [']946 also fails to invalidate the dependent claims challenged."). We have reviewed Petitioner's evidence and argument. *See* Pet. 33–35. We agree with it and adopt it as our own. For the reasons provided therein, Petitioner demonstrates that June '946 teaches or suggests the limitations of claims 2 and 3.

3. Differences Between the Subject Matter of Dependent Claim 4 and the Teachings of June '946

Petitioner provides arguments with citations to where June '946 teaches or suggests the limitations of claim 4, along with citations to the supporting declaration of Mr. Parks. Pet. 35–38 (citing Ex. 1003 ¶¶ 58–60). Claim 4 depends from claims 1 and 2, and further recites "wherein the tubing hanger annulus flow passage is routed longitudinally through a wall of the tubing hanger until turning radially outward to the side of the tubing hanger and into a sealed region located in communication with a corresponding annulus flow passage in the tubing head spool." Ex. 1001, 7:6–11.

Petitioner provides an annotated version of Figure 7 of June '946 in support of its contentions, which is reproduced below:

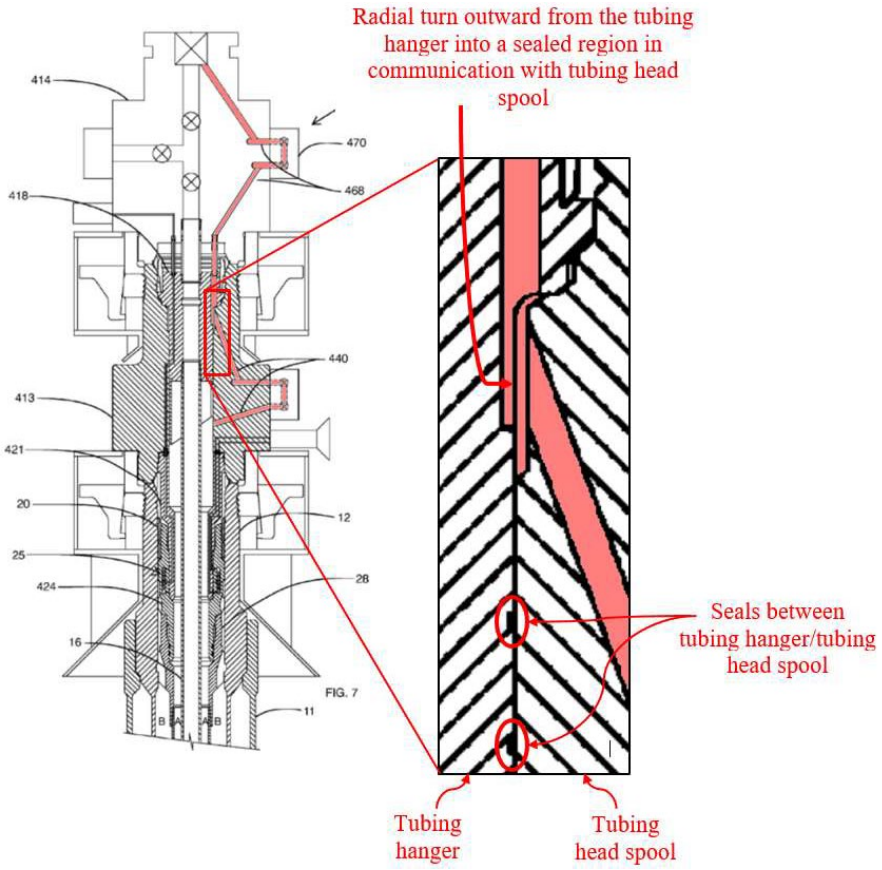

Id. at 36. Petitioner's annotated version of Figure 7 of June '946 illustrates a completion, including a close-up of the transition between tubing hanger 418 and tubing spool 413 which shows an annulus flow passage routed longitudinally through a wall of the tubing hanger until turning radially outward to the side of the tubing hanger. *Id.* at 35–36.

First, Petitioner identifies seals between the tubing hanger and tubing head spool transition below the 'A' annulus passage into tubing spool 413, and asserts that a sealed region is defined, such as "in conjunction with sealing engagement between 'tree 414' and 'tubing spool 413' above the radial turn." Pet. 36 (quoting Ex. 1003 ¶ 59). Mr. Parks explains that tree 414 and tubing spool 413 are "sealingly engaged, providing a barrier

between the external subsea environment and the hydrocarbon fluids within the completion." Ex. 1003 ¶ 59. Petitioner suggest this means that a seal above the transition is "inherent," though Mr. Parks does not use that term. Pet. 36–37. Petitioner also contends that "even without any modification" the region between tubing hanger 418 and tubing spool 413 "is a sealed region [as required by claim 4] because fluids are sealed from exiting into the external environment," and "[n]othing in the claims require more." Pet. 37 n.3. Patent Owner disputes Petitioner's contentions. PO Resp. 44–45; PO Sur-reply 15–16.

Petitioner's contention of "inherent" disclosure is not supported by a preponderance of the evidence. The Figure 7 Completion illustrates seals below the transition, but not above, suggesting seals above are not inherent. Moreover, the Figure 7 Completion, without modification, does not include an annulus stab on the 'A' annulus flow path, permitting 'A' annulus fluid into the plenum. *See* Ex. 1004, Fig. 7. Petitioner does not explain why seals would necessarily be present above the transition if there is no need to preclude 'A' annulus fluid from the plenum in the unmodified Figure 7 Completion. Petitioner also does not offer any persuasive evidence or analysis to show that the claim limitations should be construed so broadly as to encompass a "sealed region" that is merely sealed from "exiting into the external environment," as opposed to a sealed region that is a part of an "isolated path," as required by claim 1, from which claim 4 depends.

In the alternative, Petitioner does, however, persuasively show that when the Figure 7 Completion is modified to include an 'A' annulus stab, a person of ordinary skill in the art "would have found it obvious to add a seal above the 'A' annulus passage into 'tubing spool 413,' because June ['946]

teaches such a configuration with respect to the 'B' annulus passage." Pet. 37 (citing Ex. 1003 ¶ 60). Petitioner provides an annotated version of an excerpt of the Figure 7 Completion, reproduced below, showing seals above and below the 'B' annulus passage as it passes from the tubing hanger to the tubing head spool:

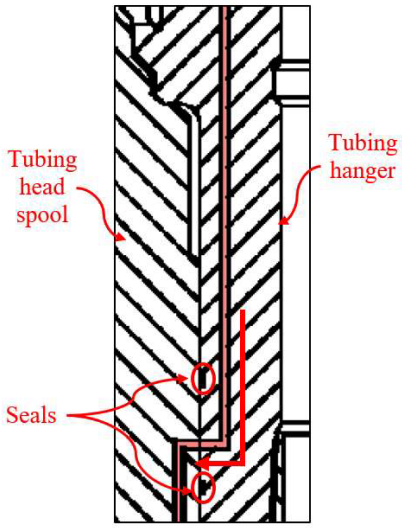

Pet. 37–38. The annotated version of an excerpt of Figure 7 of June '946 shows the 'B' annulus passage in red passing from the tubing hanger to the tubing head spool, with seals above and below the juncture. Mr. Parks explains that a person of ordinary skill in the art "would have understood that these seals provide an isolated path for the 'B' annulus fluid so that the 'B' annulus fluid does not leak into the plenum," that "[i]f 'B' annulus fluid could leak into the plenum, the purpose of using an annulus stab to provide a path through the plenum would have been defeated." Ex. 1003 ¶ 60. Mr. Parks further explains that a person of ordinary skill in the art "would have similarly been led to include seals above and below the 'A' annulus passage into 'tubing spool 413' when using an 'A' annulus stab," and that "[i]ncluding such seals would have provided an isolated path for 'A' annulus flow, and would have furthered the purpose of using a stab

for 'A' annulus flow by preventing leakage into the plenum." Ex. 1003 ¶ 60. Patent Owner does not refute Petitioner's contentions in this regard. *See* PO Resp. 44–45; PO Sur-reply 15–16. For the reasons provided above, we find that Petitioner shows by a preponderance of the evidence that the Figure 7 Completion, when modified to include an annulus stab for the 'A' annulus flow path and a seal above the transition between the tubing head spool and the tubing hanger (in addition to the seal taught by June '946 below the transition) provides a "tubing hanger annulus flow passage . . . into a sealed region located in communication with a corresponding annulus flow passage in the tubing head spool," as required by claim 4.

4. Differences Between the Subject Matter of Dependent Claim 5 and the Teachings of June '946

Petitioner contends that claim 5 would have been obvious over June '946. Pet. 38–40; Pet. Reply 15–16. Claim 5 depends from claims 1, 2, and 4, and further recites "wherein the corresponding annulus flow passage is placed in communication with an annulus between a well tubing and a casing extending down below the tubing hanger to form an overall annulus flow passage through the monobore subsea installation." Ex. 1001, 7:12–16. Petitioner shows that "the 'A annulus' is an annulus between a well tubing, i.e., 'production tubing 16,' and the casing supported by the 'production casing hanger 28,' extending below the 'tubing hanger 418,'" and that "the annulus flow passage of 'tubing spool 413' is *placed* in communication with this annulus, when the 'tubing hanger 418 [with its production tubing 16] is landed in the tubing spool 413.'" Pet. 38–39 (citing Ex. 1003 ¶ 61; Ex. 1004, 3:45–49, 8:19–22). Patent Owner does not dispute Petitioner's contentions beyond reasserting the arguments it raises with

respect to claim 1. PO Resp. 45–46. We find that Petitioner shows by a preponderance of the evidence that the Figure 7 Completion, when modified to include an annulus stab for the 'A' annulus flow path, provides an annulus flow passage "in communication with an annulus between a well tubing and a casing extending down below the tubing hanger to form an overall annulus flow passage through the monobore subsea installation," as required by claim 5.

5. Differences Between the Subject Matter of Dependent Claims 6 and 7 and the Teachings of June '946

Petitioner provides arguments with citations to where June '946 teaches or suggests the limitations of claims 6 and 7, along with citations to the supporting declaration of Mr. Parks. Pet. 40–41 (citing Ex. 1003 ¶¶ 62–63). Claim 6 depends from claims 1, 2, 4, and 5. Claim 7 depends from claim 6. Claim 6 recites "a plurality of valves disposed along the overall annulus flow passage." Ex. 1001, 7:12–16. Claim 7 recites "at least two valves of the plurality of valves are disposed along the corresponding annulus flow passage through the tubing head spool." Ex. 1001, 7:20–23. Patent Owner does not argue that the Figure 7 Completion, as modified by Petitioner, fails to teach or suggest the additional limitations of claims 6 and 7. *See* PO Resp. 44.

Petitioner shows that the Figure 7 Completion teaches "two valves along the annulus flow passage through 'tubing spool 413,' and two valves along the annulus flow passage through 'tree 414.'" Pet. 40 (citing Ex. 1003 ¶¶ 62–63; Ex. 1004, Fig. 7). We agree with Petitioner that June '946 teaches a "plurality of valves," as recited by claim 6. Ex. 1004, Fig. 7.

With regard to claim 7, Petitioner argues that Patent Owner maintained in a district court proceeding that the "plurality of valves" of claim 7 is the "plurality of valves" of claim 6 (not the "plurality of valves" of claim 1). Pet. 40 (citing Ex. 1028, 11–12 (a district court brief in which Patent Owner argues that claim 1 requires "two valves to control annulus fluid flow through the isolated path," claim 6 requires "two or more valves along the overall annulus passage," and that claim 7 requires "at least two valves in the tubing spool along the overall annulus passage.") (citation to the original pagination)). Petitioner shows, and Patent Owner does not dispute, that the Figure 7 Completion teaches the additional limitation of claim 7, because it teaches two valves along the annulus flow passage through tubing spool 413 and two valves along the annulus flow passage through tree 414. Pet. 40 (citing Ex. 1004, Fig. 7).[16]

6. Reasons Supporting the Proposed Modification of June '946

Petitioner's reasons in support of its proposed modification of the Figure 7 Completion are straightforward and based on what Petitioner shows was well known in the art to a person of ordinary skill at the time of the invention. There is no dispute that the Figure 7 Completion expressly teaches an annulus stab on the 'B' annulus flow path and a production stab, both of which span the plenum and are sealed to prevent a discharge of fluid into the plenum. Ex. 1004, Fig. 7. Petitioner also establishes that a person

[16] Because we agree that Petitioner shows, and Patent Owner does not dispute, that June '946 teaches the limitations of claim 7, we need not reach Petitioner's alternative argument, which Patent Owner also does not dispute, that it would have been obvious to include an additional valve to the Figure 7 Completion "along the annulus flow passage through the tubing head spool for redundancy." *See* Pet. 40–41.

of ordinary skill "knew that completions having an annulus stab on the A annulus were commonplace." Pet. 25 (asserting, for example, that Bartlett discloses a "monobore subsea completion" that "includes an annulus stab 108 on the 'A' annulus."). Moreover, Petitioner shows, and Patent Owner does not dispute, that a person of ordinary skill in the art "would have recognized that fluid flow into the open plenum region would expose any component within the plenum area to potentially deleterious well fluids or other fluids." *See, e.g.*, Ex. 1003 ¶¶ 48–49.

In its unpatentability analysis, Petitioner applies June '946 as though the Challenged Claims require an annulus stab on the 'A' annulus flow path, which is not taught by the Figure 7 Completion. Petitioner explains why a person of ordinary skill would have had reason to use an annulus stab, as taught by June '946 in the Figure 7 Completion for isolated access to the 'B' annulus, to instead (or to also) provide isolated access to the 'A' annulus. Pet. 25–29. Petitioner shows that at least one annulus stab is needed to isolate access to the 'A' annulus from access to the 'B' annulus, such that using the annulus stab for the 'A' annulus "can be readily implemented as an alternative" to using an annulus stab for the 'B' annulus. *Id.* at 25 (citing Ex. 1003 ¶¶ 46, 53). Petitioner also shows that including a stab on the 'A' annulus flow path in addition to the stab on the 'B' annulus flow path "adds redundancy" to prevent intermingling should one leak. *Id.* at 29 (citing Ex. 1003 ¶ 50).

Moreover, Petitioner explains that a person of ordinary skill "would have recognized that isolating the A annulus flow from the plenum would prevent annulus fluids from damaging other components in the plenum (e.g., control lines and their connectors, the tubing hanger latch mechanism) and

would have reduced the need for other seals between the plenum and external environment." *Id.* at 28 (citing Ex. 1003 ¶ 48.) Petitioner also shows that such a modification would have been consistent with industry specifications that a person of ordinary skill would have been aware of that mandated "annulus stabs between tree and tubing hanger." Pet. 28–29 (citing Ex. 1003 ¶ 49; Ex. 1021).

Petitioner also establishes that a person of ordinary skill in the art would have had a reasonable expectation of success in its proposed modification of either including an annulus stab on the 'A' annulus flow path of the Figure 7 Completion in place of, or in addition to, the annulus stab shown on the 'B' annulus flow path. Pet. 24–25. In particular, Petitioner shows that the Figure 7 Completion illustrates the successful use of an annulus stab, albeit on the 'B' flow path, and the use of multiple annulus stabs, albeit in a different dual bore configuration embodiment illustrated by Figure 5. *Id.* Petitioner further persuasively shows that "completions having an annulus stab on the A annulus were commonplace," and provides several examples that establish a person of ordinary skill in the art's "base knowledge." *Id.* at 25–28. Specifically, Petitioner identifies Figure 5 of June '946, the monobore subsea completion of Figure 4 of Bartlett [17], and Figure 1A of June '308 as showing an annulus stab on the A annulus. *Id.* at 25–27; *see also id.* at 27–28, 28 n.2 (stating that API 17D provides "industry specifications governing subsea installations," and includes a section addressing annulus stabs).

[17] U.S. Patent No. 6,488,083, issued December 3, 2002 (Ex. 1025, "Bartlett").

We find that Petitioner shows a compelling rationale for the proposed modification of the Figure 7 Completion. We do not find Patent Owner's arguments to the contrary persuasive. PO Resp. 20–46. Patent Owner first argues that a person of ordinary skill in the art would have had no reason to modify June '946. PO Resp. 20–22. Patent Owner argues that June '946 "discloses a conventional monobore subsea installation where by the 'A' annulus flow path relies on a plenum region for the flow of fluid between the tubing hanger and the subsea tree," and suggests that "there was insufficient room in the interface between the tree and the tubing hanger for an annulus stab due to the large production bore in the center of the tubing hanger," and that the use of the plenum "allowed for an annulus flow path to enter the plenum at an angle thereby reduced the amount of space occupied by the annulus flow path while still maintaining the necessary flow rate and bore wall thickness tolerances so as to avoid a catastrophic spill." *Id.* at 21 (citing Ex. 1004, Figs. 6, 7; Ex. 2004 ¶ 107). Patent Owner does not explain how any claimed feature of the '202 patent resolved the problem Patent Owner identifies as being insufficient space for an annulus stab. Patent Owner also does not suggest that June '946 or the '202 patent require any specific size production bore. Patent Owner's arguments, at most, suggest that there may be benefits to not having an annulus stab on the 'A' annulus flow path, but do not refute the benefits identified by Petitioner as reasons a person of ordinary skill would have been motivated to include an annulus stab on the 'A' annulus.

Next, Patent Owner argues that a person of ordinary skill in the art would not have relied on the teachings in June '946 related to the 'B' annulus, because of "practical distinctions" and a lack of a

reasonable expectation of success. PO Resp. 22–25. Patent Owner shows that there are differences between the 'B' annulus flow path and the 'A' annulus flow path. *Id.*; *see also* Ex. 2001 ¶¶ 25–34 (discussing monobore and dual bore subsea tree installations). Patent Owner then asserts that "the 'A' annulus must possess the same temperature and pressure ratings as the production bore and requires metal seals, whereas the 'B' annulus does not." PO Resp. 23–24 (citing, e.g., Ex. 2004 ¶¶ 109–113). First, the challenged claims of the '202 patent do not recite any particular pressure or temperature for operation. Nor does June '946 disclose any particular pressure or temperature requirements for operation. Second, the Figure 7 Completion shows a production stab that, like the annulus stab, spans the plenum. Patent Owner offers no credible evidence to refute the notion that a person of ordinary skill in the art had a reasonable expectation of success in applying the teaching of the use of a stab on the 'B' annulus flow path to the 'A' annulus flow path where the use of stabs on the 'A' annulus was well known to a person of ordinary skill in the art and June '946 expressly shows the use of a production stab suitable for the pressure and temperature of the production bore.

Patent Owner also takes issue with the fact that the 'B' annulus is typically used for monitoring and not fluid flow. PO Resp. 24–25 (citing Ex. 2004 ¶ 114). Patent Owner suggests this distinction would have prompted a person of ordinary skill to "not have looked to the 'B' annulus when engineering solutions for the 'A' annulus." *Id.* at 25 (citing Ex. 2004 ¶ 114). We are not persuaded that differences between the 'A' and 'B' annuli were such that a person of ordinary skill would have not applied the basic concept of a stab to span the plenum from one to the other, particularly

where Petitioner has shown that annulus stabs on the 'A' annulus were well know, particularly in a dual bore configuration.

That necessarily leads Patent Owner to its next argument, which is that a person of ordinary skill in the art "would not have considered teachings relating to a dual bore installation as a dual bore installation 'facilitate[s] a larger production or annulus bore' by offsetting the production bore from the centerline of the tree." PO Resp. 25–27. Patent Owner shows that there are differences between monobore and dual bore configurations, but offers no credible support for the notion that a person of ordinary skill in the art would find those differences a basis to not consider teachings that apply to both.[18] In this regard we credit the testimony of Mr. Parks, who explains there is a "vast functional overlap between dual and monobore systems," that "[b]oth are christmas trees and function to control the flow of fluids to and from a well," that it is "common" for engineers to work on both, and that June '946 "addresses both dual bore and monobore trees, including stab configurations and other features applicable to both without discrimination, and explicitly advocates sharing features between the different configurations it describes." Ex. 1032 ¶¶ 22–24 (citing Ex. 1004, 2:61-64).

Next Patent Owner argues that a person of ordinary skill "would consider the entirety of the annulus flow path through the completion," and insists that "the state of the art taught away from what Petitioner suggested in that technology evolved away from dual bore technology and toward open plenum designs." PO Resp. 27–30. According to Patent Owner, the

[18] As confirmed during the hearing, Patent Owner does not argue that monobore and dual bore systems are non-analogous art. Tr. 40:25–41:3:3.

information Petitioner relies on to show the knowledge of a person of ordinary skill in the art merely confirms that "dual bore trees included a completely vertical annulus path with an 'annulus stab'" and "Petitioner could not identify a single monobore subsea installation with the claimed "annulus stab" used in the claimed "isolated path." *Id.* (citing Ex. 2004 ¶¶ 121–125). We have considered Patent Owner's arguments and find them not pertinent to the rationale shown by Petitioner. Indeed, if a single reference had disclosed every limitation of a challenged claim of the '202 patent without modification, the ground of unpatentability asserted by Petitioner presumably would have been anticipation, not obviousness. Moreover, we credit the testimony of Mr. Parks over Patent Owner's arguments, who testifies that "none of Patent Owner, Mr. Voss, or the '202 patent explain why using an annulus stab would affect routing of the annulus path at locations far below the plenum, much less why they would affect whether they would enter the tubing head spool," and explains that a person of ordinary skill in the art "would have recognized a reasonable expectation of success in using an 'A' annulus stab in June's system based on use of an 'A' annulus stab in the functionally similar systems of Bartlett and June '308." Ex. 1032 ¶ 18.

Patent Owner also argues that "both of Petitioner's proposed modifications fail as both require a stab to be placed on the 'A' annulus, a stab that would render the June [']946 subsea installation inoperable in installation and workover modes." PO Resp. 30 (citing Ex. 2004 ¶¶ 127–28); PO Sur-reply 11–13. Patent Owner directs us to a disclosure in June '946 that "annulus fluid flows around the outside of the tubing hanger and into the plenum." *Id.* (citing Ex. 1004, 8:6–9). As noted by Petitioner,

the portion of June ’946 cited by Patent Owner concerns the embodiment shown in Figure 6 of June ’946, not the flow path shown in the embodiment illustrated in Figure 7 of June ’946 upon which Petitioner relies. Pet. Reply 10 (citing Ex. 1032 ¶ 28). Patent Owner does not explain persuasively how its argument based on a different embodiment renders the proposed modification of the Figure 7 embodiment inoperable as well. Moreover, Patent Owner’s argument is based only on conclusory testimony by Mr. Voss, who states that “[i]t is my opinion that the ‘A’ annulus pathway as proposed by Petitioner would not be connectable to the BOP [(blow out preventer)] choke and kill lines designed to operate with June [’]946 because the BOP and choke and kill lines would be configured for connection to an annulus passageway without a stab.” Ex. 2004 ¶ 128.

Petitioner argues that “nothing in the claims of the ’202 patent require the well system be used with a specific installation/workover mode,” and that “such equipment can be, and often is, designed for the specific well system.” Pet. Reply 9–10. We find that even if other equipment, such as “BOP and choke and kill lines” would require modifications to be compatible with the completion of Figure 7 of June ’946, as modified by Petitioner to include an ‘A’ annulus stab, that does not show that Petitioner’s proposed modifications would render the completion of Figure 7 inoperable. By way of analogy, if one modifies an apparatus to require a flat-head screw in place of a Phillips-head screw, the fact that a user of the apparatus may then also need to modify the screw driver used with the system does not render the apparatus inoperable as a result of the modification. We find that the same logic applies here. Whether a different BOP and choke and kill lines would be required for use with the modified completion proposed by

Petitioner does not render the proposed system inoperable, particularly as Mr. Parks explains, with cited support, that "arrangements that utilized an 'A' annulus stab in installation/workover modes were known and understood." Ex. 1032 ¶¶ 28–29 (citing Ex. 1019, Fig. 6).

Patent Owner also argues at length that a person of ordinary skill in the art would have understood that the Figure 7 Completion "could not be modified in the manner proposed by Petitioner." PO Resp. 31–40. More specifically, Patent Owner argues that the 'A' annulus passageway "is specifically designed to enter the plenum at an angle," that "the 'A' annulus entry into the plenum from the tree is not on the same vertical axis as the 'A' annulus flow path entry point into the tubing hanger" such that "it would be impossible to connect the two passageways with a vertical stab." PO Resp. 31 (citing Ex. 2004 ¶¶ 129–130; Ex. 2005 158:1–16). The only support for Patent Owner's argument is the conclusory opinion of Mr. Voss, who states that "[i] is my opinion that June [']946 discloses a particular 'A' annulus passageway through the tree. Based on the particular angles and geometry specifically disclosed by June [']946, the [person of ordinary skill in the art] would have understood that the 'A' annulus passageway could not be modified to accommodate an 'annulus stab' in the manner proposed in the Petition." Ex. 2004 ¶ 129. Mr. Voss also notes "that the 'A' annulus passageway in the June [']946 tree is specifically designed to communicate with the plenum at an angle. Indeed, as seen in Figure 7, the entry point into the plenum is not on the same vertical axis as the entry point to the annulus flow path in the tubing hanger." *Id.* ¶ 130.

Contrary to Patent Owner's argument, June '946 expressly states that its "drawing figures are not necessarily to scale," that "[c]ertain features of

the invention may be shown exaggerated in scale or in somewhat schematic form and some details of conventional elements may not be shown in the interest of clarity and conciseness," and that the "disclosure is to be considered an exemplification of the principles of the invention, and is not intended to limit the invention to that illustrated and described herein." Ex. 1004, 2:52–61; Pet. Reply 11. Patent Owner does not direct us to persuasive objective evidence to suggest that the schematic drawing of the completion illustrated in Figure 7 of June '946 requires any element at any specific angle or orientation.

Patent Owner proceeds to argue that the modifications proposed by Petitioner "would have required analysis of numerous design and engineering challenges." PO Resp. 33 (citing Ex. 2004 ¶ 133). Patent Owner notes that Mr. Parks explained when asked that the specifications or dimensions of a stab pocket depend on "the size of the production bore," the pressure rating," the material used for the "stub stab," and the "kind of seals" used. PO Resp. 33; Ex. 2005, 104:2–12. Patent Owner, however does not suggest any of those considerations are beyond the ability of a person of ordinary skill in the art or demonstrates no reasonable likelihood of success. *See* PO Resp. 33. To the contrary, the modifications appear to be considerations necessary for any implementation of a design disclosed in the '202 patent or June '946, because such a level of detail is not specified in the disclosures. As June '946, itself, states "[t]he various characteristics mentioned above, as well as other features and characteristics described in more detail below, will be readily apparent to those skilled in the art upon reading the following detailed description of the embodiments, and by referring to the accompanying drawings." Ex. 1004, 3:2–7. We also

disagree with Patent Owner's characterization of the testimony of Mr. Parks as purportedly failing "to confirm" Petitioner's proposed modification is "manufacturable" because he "never performed the necessary analysis." PO Resp. 34 (citing Ex. 2005, 221:17–20). Mr. Parks was not asked to confirm whether Petitioner's modified design was "manufacturable," but simply explained that the drawings are "not to scale," are "not manufactured drawings," and "convey a concept or an idea, not manufacturability of something." Ex. 2005, 203:17–204:3. When Mr. Parks was questioned, counsel for Patent Owner acknowledged that Petitioner's "revised Figure 7" was "not an engineering drawing," and Mr. Parks confirmed it was "a schematic" and, when asked if he ever did "any calculations when this revised drawing was being . . . included in your declaration," stated he "did not." Ex. 2005, 220:19–221:20.

Patent Owner also proceeds to detail why Petitioner's proposed modifications are "impossible to fabricate" based on the schematic illustration Petitioner provided of a modified completion of Figure 7 of June '946 with an annulus stab on the 'A' annulus flow path. PO Resp. 34–40. Patent Owner explains various considerations in the manufacture of a completion, including "the size of the boring bit, the angle of the flow path, the clearance between the boring bar and other structures in the block, and the access of the boring bit to the flow path." *Id.* at 36 (citing Ex. 2004 ¶ 135). Patent Owner then argues that Petitioner's modified version of Figure 7 "defies the practical realities of drilling the bores in a forged steel block." *Id.* at 37. Patent Owner, however, further acknowledges that a person of ordinary skill in the art "would have understood that any modification to add a stab must account for a passageway that avoids the

internal features and accommodates the annulus valve location as shown in Figure 7 of June [']946." PO Resp. 38 (citing Ex. 2004 ¶ 141). We also credit the testimony of Mr. Parks that implementation of the modifications proposed by Petitioner would have been within the basic level of skill of a person of ordinary skill in the art, and notes that June '946 illustrates passages in a schematic that don't show "a defined entry point" as Patent Owner suggests is required for manufacturability, further supporting that implementation of such designs was within skill of a person of ordinary skill in the art. *See* Ex. 1032 ¶¶ 30–34.

We have also considered Patent Owner's arguments that a person of ordinary skill in the art would not have modified the Figure 7 Completion to include a seal above the juncture because such a person: (a) "would not place seals on the uneven surface between the tubing hanger and tubing spool above the annulus flow path," (b) "would further understand that the shoulder surfaces above the transition point would have been an improper location for a seal as a seal would interfere with the load shoulder capacity," and (c) "would not place a seal on the uneven surface between the tubing hanger and tubing spool above the tubing spool 'A' annulus flow path because the upper seal would therefore be located on a different diameter than the lower seal located below the 'A' annulus flow path." PO Resp. 43–44 (citing Ex. 2004 ¶¶ 148–150). In sum, Patent Owner's arguments are not persuasive because they are premised on treating figures that are schematic drawings as though they are precise engineering drawings, and do not refute Petitioner's demonstration that a person of ordinary skill in the art would have had reason to modify the Figure 7 Completion as proposed by Petitioner, and would have had a reasonable likelihood of success in

implementing the modifications proposed by Petitioner. It is well settled "that patent drawings do not define the precise proportions of the elements and may not be relied on to show particular sizes if the specification is completely silent on the issue." *Hockerson–Halberstadt, Inc. v. Avia Group Int'l, Inc.*, 222 F.3d 951, 956 (Fed. Cir. 2000).

F. Alleged Obviousness Over the Combination of June '946 and June '308

Petitioner contends that claim 8 would have been obvious over the combination of June '946 and June '308. Pet. 41–44; Pet. Reply 16–17. Patent Owner disputes Petitioner's contentions. PO Resp. 46–48; PO Sur-reply 16–17. Claim 8 depends from claim 1 and further recites "the annulus stab comprises a plurality of annulus stabs for conducting flow along the isolated path." Ex. 1001, 7:24–26.

Petitioner shows that "June '308 teaches that 'one or more' stabs may be used to connect an annulus passage of the tree and annulus passage of the tubing hanger." Pet. 41 (citing Ex. 1005, 5:66–6:24, 5:12–30; Ex. 1003 ¶¶ 65–66). June '308 discusses "production bore stab 190," and, thereafter states as follows:

> Further, one or more additional stabs or similar components may be included within the completion system 100, such as positioned about or adjacent the production bore stab 190 to have additional bores and passages of the production tree 110 in fluid communication with the tubing hanger 144. For example, one or more auxiliary passage stabs 192 may be positioned between the auxiliary passage of the production tree 110 and the auxiliary passage 148 of the tubing hanger 144, thereby isolating and fluidly coupling the auxiliary passage of the production tree 110 to the auxiliary passage 148 of the tubing hanger 144.

Ex. 1005, 5:49–6:3. In support of Petitioner's contentions, Mr. Parks explains that "[t]he passages that June '308 refers to as 'auxiliary' passages are in fluid communication with the 'annulus' region, and thus are annulus passages." Ex. 1003 ¶ 66 (citing Ex. 1005, 5:12-30 (describing "auxiliary passage 148" in fluid communication with "annulus 172").

Patent Owner argues that June '308 "discloses one or more stabs that are associated with one or more auxiliary passages, but never discloses that more than one stab can be placed on any single passage." PO Resp. 46–47 (citing Ex. 2004 ¶ 162). According to Patent Owner, "whenever June 308 disclosed a single auxiliary passage, it only discloses a single stab." *Id.* at 47 (citing Ex. 1005, 6:9–14; Ex. 2004 ¶¶ 163–64; Ex. 2005, 234:8–19, 235:1–9).

We find Petitioner shows by a preponderance of the evidence that June '308 teaches "a plurality of annulus stabs," as required by claim 8 because, as Petitioner explains, the express disclosure of June '308 states that more than one auxiliary passage stab may be placed on a single passage. Ex. 1005, 6:4–9 (stating that "one or more auxiliary passage stabs 192 may be positioned between the auxiliary passage of the production tree 110 and the auxiliary passage 148 of the tubing hanger 144"); *see also* Pet. 41; Pet. Reply 16 (emphasizing "the auxiliary passage" is singular). We also find persuasive Mr. Parks testimony, which explains as follows:

> In other words, June '308 describes that plural "stabs" may be positioned between "the" auxiliary passage of the production tree and "the" auxiliary passage of the tubing hanger. I note that June '308 also provides a specific counterexample in which the auxiliary passage stab of a particular embodiment "may be an individual sleeve." Based on my knowledge and experience in the field and my review of June '308, a [person of ordinary skill in the art] would have plainly understood that this further

> highlights June '308's explicit description that "one or more auxiliary stabs" may be used. I also note that June '308 describes the "auxiliary passage" can be the 'A' annulus passage. POR, 47 ("June 308 further discloses that one of the auxiliary passages could take the form of an annulus flow path.").

Ex. 1032 ¶ 53. Patent Owner attempts to discredit the reply declaration testimony of Mr. Parks by suggesting it is inconsistent with his prior deposition testimony. PO Sur-reply 16–17. During his deposition Mr. Parks stated he did not remember whether June '308 taught the use of multiple stabs on a single passageway, that he did not believe that it did, and, when asked about a specific portion of June '308 (at Ex. 1005, 3:15), confirmed that the reference says "an annulus flow path." PO Sur-reply 16–17; Ex. 2005, 234:14–235:9. Mr. Parks was not directed to or asked about the portion of June '308 relied upon above and we do not find any inconsistency in his explanation of June '308 between his deposition testimony cited by Patent Owner and his reply declaration. Regardless, the express disclosure of June '308 teaches that the annulus stab may be comprised of a plurality of annulus stabs for conducting flow along the isolated path, as required by claim 8. Ex. 1005, 5:49–6:3.

In support of applying the teaching of "a plurality of annulus stabs for conducting flow along the isolated path" from June '308 to the completion of Figure 7 of June '946, Petitioner persuasively shows that a person of ordinary skill would have been motivated to apply the multiple stabs of June '308 "to efficiently conduct annulus fluids between the tree and tubing hanger" by achieving a "desired flow area" while reducing the diameter of each individual stab. Pet. at 43 (citing Ex. 1003 ¶¶ 67–69). Petitioner's asserted rationale is more than sufficient to support the unremarkable notion

that a person of ordinary skill in the art would have had reason to replace a single stab with two or more stabs to achieve the same result.

Patent Owner argues that June '308 "teaches away from a combination with June 946," because June '308 "specifically teaches 'not including a valve within a tubing spool' and specifically routing its flow path through the tubing hanger and not the tubing spool." PO Resp. 47–48 (citing Ex. 1005, 7:13–24, Figure 1A). Patent Owner's argument is not persuasive because Petitioner relies on June '308 for its teaching of the use of multiple stabs, not valves in the tubing spool or the flow through the tubing hanger. According to Patent Owner, "Mr. Parks intentionally ignored this clear teaching as it was 'not relevant to what we were trying to -- to show.'" *Id.* at 48 (quoting Ex. 2005, 169:17–170:1). We agree with Mr. Parks, and Patent Owner does not suggest a reason why some other teaching of June '308 concerning valves is relevant to Petitioner's asserted combination. Moreover, we agree with Petitioner that the portion of June '308 that Patent Owner directs us to does not teach away because it merely suggest a preference for an alternative with regard to valves. *See* Pet. Reply 17 (citing *Depuy Spine, Inc. v. Medtronic Sofamor Danek, Inc*., 567 F.3d 1314, 1327 (Fed. Cir. 2009) (not teaching away "if it merely expresses a general preference for an alternative."); see also Ex. 1032 ¶ 41 (Mr. Parks explaining that the "teaching away" Patent Owner asserts concerns valves in the tubing spool, not the use of a plurality of annulus stabs for which June '308 is relied upon in the Petition).

G. Alleged Obviousness Over the Combination of June '946 and Cameron

Petitioner contends that claims 9, 10, and 12–15 of the '202 patent would have been obvious over June '946 and Cameron. Pet. 44–57; Pet.

Reply 17–18. Petitioner's contentions are supported by Mr. Parks. Ex. 1003 ¶¶ 72–89.

1. Differences Between the Subject Matter of Independent Claim 9 and the Teachings of June '946 and Cameron

Claim 9 recites many features in common with claim 1, including a tubing hanger, a subsea tree, a plenum region, a central monobore production passage, and an installation annulus passage. Petitioner shows the Figure 7 Completion teaches these features as to claim 9 for the same reasons discussed above for claim 1. Pet. 50–53. Patent Owner does not suggest any of these common features are distinguishable between claims 1 and 9. *See* PO Resp. 48–50. We find Patent Owner's argument that the Petition lacks "the requisite analysis or citation" as to claim 9 not persuasive because the Petition shows how each feature is taught by the Figure 7 Completion. Claim 9, like claim 1, also requires an "annulus passage" with an "annulus stab" that serves to "isolate annulus flow." Petitioner shows that the Figure 7 Completion, as modified to include an annulus stab, corresponds to these limitation for substantially the same reasons discussed above with regard to claim 1. Pet. 52–54 (citing Ex. 1003 ¶¶ 85–86; Ex. 1004, Fig. 7).

Patent Owner disputes Petitioner's contentions for the same reasons Patent Owner asserts with regard to claim 1, which we find not persuasive for substantially the same reasons discussed above. PO Resp. 49–50 (arguing again that Petitioner's modifications of the Figure 7 Completion "were impossible," and that a person of ordinary skill would not have added an annulus stab). We further note that Patent Owner's argument that Cameron would not be relied on for the teachings of a dual bore tree (*id.* at

49) is misplaced because Cameron is not relied on by Petitioner for these limitations.

Distinct from claim 1, claim 9 further recites: "the subsea installation further comprising a control line extending through the plenum region and comprising control line sections joined by a pair of mating control line connectors." Ex. 1001, 7:45–49. Corresponding to this limitation, Petitioner contends that Cameron teaches "an SCSSV [(surface controlled subsurface safety valve)] control line/connectors extending through the plenum region between a tree and tubing hanger," including "multiple control line sections between the tree and tubing hanger control line sections" that "are joined by a pair of male/female mating control line connectors that mate to provide a continuous control line such that a SCSSV can be hydraulically closed." Pet. 54–55; (incorporating by reference Pet. 44–50); *see* Ex. 1009, 4.

Patent Owner disputes Petitioner's reliance on Cameron, because "Cameron is irrelevant to the inquiry as Cameron is directed to a dual bore installation." We reject again, for the reasons provided above, Patent Owner's argument that any teaching of any prior art dual bore installation would not be relied on by a person of ordinary skill in the art in regard to a monobore installation. Indeed, Patent Owner does not even suggest any distinction in the use of a "control line," as recited by claim 9, between a monobore and a dual bore installation. We have reviewed Petitioner's evidence and argument. *See* Pet. 44–55. We agree with it and adopt it as our own. For the reasons provided therein, Petitioner demonstrates that the combination of June '946 and Cameron teaches or suggests the limitations of claim 9.

2. Differences Between the Subject Matter of Dependent Claims 10 and 12–15 and the Teachings of June '946 and Cameron

Claims 10 and 12–15 depend from claim 9. The additional limitations of claims 10 and 13 are substantially similar to the additional limitations of claim 2. Patent Owner does not provide any additional argument to dispute Petitioner's contentions with regard to claims 10 and 13 beyond the arguments Patent Owner advances with regard to claim 9. PO Resp. 53. Petitioner shows that the additional limitations of claims 10 and 13 are taught by the Figure 7 Completion for the same reasons as discussed above with regard to claim 2. Pet. 55–57.

Claim 12 requires that "the production stab is disposed along a longitudinal center of the subsea installation." Patent Owner does not provide any additional argument to dispute Petitioner's contentions with regard to claims 12 beyond the arguments Patent Owner advances with regard to claim 9. PO Resp. 53. Petitioner shows the additional limitations of claim 12 are taught by the Figure 7 Completion. Pet. 56.

The additional limitations of claim 14 are substantially similar to the additional limitations of claim 4, and the additional limitations of claim 15 are substantially similar to the additional limitations of claim 5. Petitioner shows that the additional limitations of claims 14 and 15 are taught by the Figure 7 Completion for the same reasons as discussed above with regard to claims 2, 4, and 5. We have considered Patent Owner's arguments disputing Petitioner's contentions with regard to claim 14 on the same basis as claim 4 and with regard to claim 15 on the same basis as claim 5 and find them not persuasive for the same reasons provided above with regard to claims 4 and 5. PO Resp. 53–54.

We have reviewed Petitioner's evidence and argument. *See* Pet. 44–50, 55–57. We agree with it and adopt it as our own. For the reasons provided therein, Petitioner demonstrates that the combination of June '946 and Cameron accounts for the limitations of claims 10 and 12–15.

3. Reasons Supporting the Proposed Combination of June '946 and Cameron

Petitioner concedes that June '946 "does not explicitly discuss SCSSVs" for its subsea completion, but argues a person of ordinary skill would have understood the completion to have had an SCSSV or that an SCSSV would have been obvious "in wells that are able to produce under their own pressure, because SCSSVs were typically required of such completions." *Id.* at 47 (citing Ex. 1003 ¶ 77). We find persuasive Petitioner's reasoning that a person of ordinary skill would have applied Cameron's teaching of an SCSSV control line and connectors to the completion of June '946 "to enable use of an SCSSV and meet requirements that mandate an SCSSV," and because "incorporating the SCSSV control line/connectors as suggested by Cameron would have enhanced the safety and reliability of June ['946]'s system by enabling use of an SCSSV to shut-in production fluids should the tree fail or need to be removed." Pet. 50 (citing Ex. 1003 ¶¶ 71, 79–81).

Patent Owner argues that Petitioner's reliance on Cameron is misplaced because Cameron "is irrelevant to the inquiry since Cameron is directed to a dual bore installation." PO Resp. 50–51 (citing Ex. 2004 ¶ 174). We find the testimony of Mr. Voss that "it is my opinion that the [person of ordinary skill in the art] would not have combined teachings relating to dual bore trees, such as the dual bore trees disclosed in June 946 and Cameron, with teachings related to vertical monobore trees," is

unsupported and not credible. Ex. 2004 ¶ 174. As explained above, we rejected the unpersuasive and not credible notion advanced by Patent Owner that all teachings of prior art concerning dual bore installations are inapplicable or irrelevant to a monobore installation.

Patent Owner further argues that "Petitioner never explains how the teachings of Cameron apply to the monobore design of June 946," and that "Petitioner does not provide any explanation of how a [person of ordinary skill in the art] would fit a control line with mating connectors and the modified annulus stab as suggested by Petitioner inside a tubing hanger having a production stab in a monobore wellhead completion configuration." PO Resp. 53 (citing Ex. 2004 ¶182). Petitioner is not required to actually bodily incorporate Cameron's SCSSV into the Figure 7 Completion. *See Allied Erecting & Dismantling Co. v. Genesis Attachments, LLC*, 825 F.3d 1373, 1381 (Fed. Cir. 2016). "The test for obviousness is not whether the features of a secondary reference may be bodily incorporated into the structure of the primary reference,. . . but rather whether a skilled artisan would have been motivated to combine the teachings of the prior art references to achieve the claimed invention." *Id.* (citations omitted). Patent Owner does not refute Petitioner's contention that a person of ordinary skill in the art would have had reason to incorporate the SCSSV control line/connectors as suggested by Cameron into the Figure 7 Completion to enhance the safety and reliability of the system by enabling use of an SCSSV to shut-in production fluids should the tree fail or need to be removed.

H. Alleged Obviousness Over the Combination of June '946, Cameron, and June '308

Petitioner contends that claim 11 would have been obvious over June '946, Cameron, and June '308. Pet. 57 (citing Ex. 1003 ¶ 90). Claim 11 depends from claims 10 and 9 and, like claim 8, recites "wherein the annulus stab comprises a plurality of annulus stabs." Ex. 1001, 8:1–2. Petitioner relies on its analysis of claim 8 as obvious over June '946 and June '308 to show that the asserted combination taught the same limitation of claim 11. Pet. 57. Petitioner also argues a person of ordinary skill in the art "would have been led" to combine June '946, Cameron, and June '308 for the same reasons Petitioner asserted such a person would have had reasons to combine June '946 and Cameron in regard to claims 9, 10, and 12–15, and to combine June '946 and June '308 in regard to claim 8. *Id.* Patent Owner argues that June '308 "fails to teach or suggest wherein the annulus stab comprises a plurality of annulus stabs" for "the same reasons" Patent Owner advances with regard to claim 8. PO Resp. 54 (citing Ex. 2004 ¶ 189). For the same reasons provided above with regard to claim 8, we find that June '308 teaches or suggests the additional limitations of claim 11, as well, that Patent Owner's arguments are not persuasive, and that Petitioner shows a persuasive rationale in support of the asserted combination.

I. Alleged Obviousness Over the Combination of June '946, API 17D, and June '354

Petitioner contends that claims 9, 10, and 12–15 would have been obvious over June '946, API 17D, and June '354. Pet. 57–62. Petitioner argues that API 17D illustrates a subsea tree with a SCSSV and corresponding control lines, and that June '354 teaches a "multi-part

hydraulic connector" with male and female mating connectors. Pet. 57–58. In short, Petitioner contends that June '946 teaches all of the limitations of claims 9, 10, and 12–15 other than "the subsea installation further comprising a control line extending through the plenum region and comprising control line sections joined by a pair of mating control line connectors." *Id.* at 60–62. Petitioner relies on API 17D and June '354 as teaching this additional limitation, and argues that a person of ordinary skill would have been motivated to include the SCSSV and control lines of API 17D with June '946 "in order to meet requirements that mandated an SCSSV" and "to enhance the safety and reliability" of the system. Pet. 59. Petitioner further asserts that a person of ordinary skill would have been motivated to apply the specific example of a multi-part mating connector suitable to a SCSSV control line taught by June '354 to the combination of June '946 and API 17D because such a coupling has known advantages, including "self-sealing." *Id.* at 60.

In addition to relying on its arguments raised with regard to prior grounds addressed above, which we find not persuasive for the reasons provided above, Patent Owner argues that "Petitioner's reliance on API 17D is misplaced." PO Resp. 55–57. We understand Patent Owner to be arguing that API 17D is directed to a dual bore system and, therefore, not relevant -- an argument we reject for the reasons provided above. Patent Owner also argues that "Petitioner merely relies on June ']354 as teaching the 'male/female mating connectors' based on the incorrect presumption that a control line already is present (which it is not)." *Id.* at 55. Patent Owner does not make clear what "presumption" to which it is referring. Petitioner relies on API 17D for teaching a subsea tree with a SCSSV and

corresponding control lines and June ’354 for teaching “multi-part hydraulic connector” with male and female mating connectors. Pet. 57–58. Patent Owner also argues again that a person of ordinary skill in the art would have had no motivation to combine the references because API 17D illustrates a dual bore system and a person of ordinary skill in the art “would not have applied the teachings of a dual bore tree to the monobore design of June [’]946.” PO Resp. 55–56. Once again, we reject Patent Owner’s arguments for the reasons provided above.

J. Alleged Obviousness Over the Combination of June ’946, API 17D, June ’354, and June ’308

Petitioner contends that claim 11 would have been obvious over the combination of June ’946, API 17D, June ’354, and June ’308. Pet. 62 (citing Ex. 1003 ¶¶ 98). Patent Owner does not advance any additional arguments and relies on its previous argument that “June 308 fails to teach or suggest “wherein the annulus stab comprises a plurality of annulus stabs,” which we reject for the reasons provided above. PO Resp. 57–58. We have reviewed Petitioner’s evidence and argument. *See* Pet. 62. We agree with it and adopt it as our own. For the reasons provided therein, Petitioner demonstrates that combination of June ’946, API 17D, June ’354, and June ’308 teaches or suggests the limitations of claim 11, and provides a persuasive rationale in support of their combination.

K. Alleged Obviousness Over the Combination of Reimert, Donald, and Cameron

Petitioner contends that claims 1–7, 9, 10, and 12–15 would have been obvious over the combination of Reimert, Donald, and Cameron. Pet. 62–95. Petitioner’s contentions are supported by Mr. Parks. Ex. 1003 ¶¶ 100–137.

1. Differences Between the Subject Matter of Independent Claims 1 and 9 and the Teachings of Reimert, Donald, and Cameron

Petitioner shows, and Patent Owner does not dispute, that Reimert teaches a monobore subsea installation with a tubing head spool, tubing hanger, subsea tree, a plenum region, a production stab, and a plurality of valves, as required by claim 1. Pet. 75–85 (citing Ex. 1006, Abstract, 1:61–3:33, 3:50–53, 4:51–5:7, 6:12, 6:56–7:7, Fig. 4; Ex. 1003 ¶¶ 118–124, 127). We have reviewed Petitioner's evidence and argument, agree with it, and adopt it as our own findings. *Id.* Likewise, claim 9 requires similar features which Petitioner shows, and Patent Owner does not dispute, are taught by the asserted combination. Pet. 90–91.

Reimert does not teach "an annulus stab" between the tubing hanger and the subsea tree, as similarly required by claims 1 and 9. For this feature Petitioner relies on Cameron, which teaches an annulus stab on the 'A' annulus in a dual bore installation. Pet. 69–70, 83–84, 92; Ex. 1003 ¶ 125; Ex. 1009, 4 (Figure labeled "Wellhead to Christmas Tree Interface").

Claim 1 further requires "the isolated path further being routed through the subsea tree, through the annulus stab, and through the tubing hanger until exiting out through a side of the tubing hanger to the tubing head spool to accommodate an annulus flow path along the monobore subsea installation." Claim 9 similarly requires an "installation annulus passage . . . to isolate annulus flow." For this element, Petitioner relies on a combination of Reimert and Donald. Pet. 62–69, 84, 92. Petitioner shows that the system illustrated in Figure 4 of Reimert includes an annulus flow passage from annular region 56 into tree 10 where it encounters crossover valve 75. Pet. 63, 84; Ex. 1003 ¶ 125; Ex. 1006 Fig. 4. The annulus flow

passage of Reimert does not extend independently from crossover valve 74 to the top of tree 10.

Petitioner contends that a person of ordinary skill in the art "would have been motivated to implement an annulus passage from a bottom to a top of the tree in the completion of Reimert . . . based on Donald's explicit teachings to do so," which provides "an example of the common configuration of the annulus passage extending to the top of the tree, and explains that this configuration facilitates access and tool insertion during intervention operations." Pet. 66 (citing Ex. 1003 ¶¶ 104–109; Ex. 1010, 1:62–67; 13:16–19). Petitioner also contends that Reimert acknowledges that its trees could have included an annulus passage from the bottom to the top of the tree because it states that "[i]n some examples, the production tree does not have an annulus bore that traverses through the production tree," (presumably implying that in "some" other example, it does have an annulus bore that traverses through the production tree). Pet. 68–69; Ex. 1006, 6:24–42; *see also* Ex. 1006, 5:21–23 (stating that "top terminated annulus bore in the production tree is not required"). With regard to the "control line" required by claim 9, Petitioner relies on Cameron, as discussed with regard to the asserted ground above based on June '946 and Cameron. Pet. 93–94.

Patent Owner argues that "Reimert does not actually disclose that its system is configured to allow annulus fluid flow through the tree. PO Resp. 58–63 (citing Ex. 2004 ¶¶ 95–99, 209–211). We disagree, because Patent Owner's argument does not reflect how the physical structure of Reimert, fundamentally a system of pipes and valves, is capable of functioning. Instead, Patent Owner's arguments are improperly premised on how Patent Owner contends Reimert was intended to be operated, depending

on the circumstances, based on how Reimert teaches "specific instructions for opening / closing valves." *Id.* at 60 (citing Ex. 1006, 5:50–57).

More specifically, Patent Owner shows how fluid could flow through various paths in Reimert when certain valves are either opened or closed, for example, "to accomplish an annulus flow path between the well and the production facility without any annulus flow through the tree." *Id.* at 62. Patent Owner then concedes that there are "alternative flow paths," but argues, based on closing certain valves and opening others, that "even when annulus fluid is permitted to flow into the tubing hanger, the annulus fluid is not permitted to flow into the tree." *Id.* at 64–65 (citing Ex. 1006, 5:47–49). Patent Owner proceeds to explain how Reimert would be operated during "typical operation" and how valves would be operated "during workover mode," "not when a tree is attached." Whether Reimert teaches, as an apparatus, a system configured to allow annulus fluid to flow through the tree simply does not turn on whether a valve taught by Reimert is opened or closed by an operator. Petitioner persuasively shows that "Reimert's configuration shown in FIG. 4 provides a fluid flow path through the tubing spool, tubing hanger, and into the tree (e.g., via the plenum) that is in communication with 'annular region 56.'" Pet. Reply 19–20 (citing Ex. 1032 ¶ 61).

2. Differences Between the Subject Matter of Dependent Claims 2–7, 10, and 12–15 *and the Teachings of Reimert, Donald, and Cameron*

Petitioner shows, and Patent Owner does not dispute, that the combination of Reimert, Donald, and Cameron teaches the additional limitations of dependent claims 2–7, 10, and 12–15. Pet. 85–90, 94–95 (citing Ex. 1003 ¶¶ 128–132, 137; Ex. 1006, 5:24–26, 6:58–7:7, Fig. 4;

Ex. 1009, 4); PO Resp. 58–73. We have reviewed Petitioner's evidence and argument, agree with it, and adopt it as our own findings. *Id.*

3. Reasons Supporting the Proposed Combination of Reimert, Donald, and Cameron

Petitioner argues that a person of ordinary skill "would have found it obvious, based on Cameron's teachings, that use of a stab to connect the tree and tubing hanger annulus passages would have isolated the annulus flow from the plenum." Pet. 71. Petitioner's rationale for the asserted combination is essentially the same as discussed above with regard to the reasons for modifying June '946. *See* Pet 71–72 (explaining that a stab "would have isolated the annulus flow," "would have prevented contact of fluids with other components," and "adds redundancy") (citations omitted). Petitioner contends that a person of ordinary skill would have recognized these benefits would have applied whether the annulus stab were used in a dual bore installation, such as Cameron, or in a monobore installation like Reimert. *Id.* (citing Ex. 1003 ¶ 113). Petitioner suggests a person of ordinary skill would not have been deterred from applying the dual bore annulus stab of Cameron to the monobore tree of Reimert because of the advantages, such as preventing contact with other fluids, reducing the need for other sealing mechanisms, and redundancy. *Id.* at 71–70.

Patent Owner argues, after discussing the operation of Reimert, that "Reimert provides no reason a [person of ordinary skill in the art] would ever consider adding an annulus stab to the plenum region of Reimert between the tubing hanger and the tree." PO Resp. 68–69. Patent Owner's argument is misplaced, because Petitioner does not rely on Reimert as providing a reason to include an annulus stab because Reimert does not teach the use of an annulus stab. Patent Owner also argues that a person of

ordinary skill would have had no reason to add an annulus stab because "there is no disclosure in Reimert of annulus fluid flowing through it while the tree is attached," and that "even if there were any fluid flow, it would be production fluid." PO Resp. 69. We find Patent Owner's argument not persuasive because it does not refute the rationale advanced by Petitioner based on the combination of Reimert, Donald, and Cameron, which provides for annulus flow through the annulus stab and the tree.

L. Alleged Obviousness Over the Combinations of Reimert, Donald, Cameron, and June '308

Petitioner shows that the combination of Reimert, Donald, Cameron, and June '308 teaches the limitations of dependent claims 8 and 11. Pet. 95–96 (citing Ex. 1003 ¶¶ 138–142; Ex. 1005, 5:66–6:24. According to Petitioner, "implementing June '308's suggestion to use more than one stab in the Reimert/Donald/Cameron completion amounted to mere duplication of parts, which has no patentable significance." *Id.* at 96 (citations omitted).

Patent Owner argues only that June '308 fails to teach or suggest "wherein the annulus stab comprises a plurality of annulus stabs," for the same reasons Patent Owner advanced with regard to the ground based on June '946 and June '308, which we find not persuasive for the same reasons provided above. PO Resp. 74. We have reviewed Petitioner's evidence and argument, agree with it, and adopt it as our own findings. Pet. 95–96.

M. Objective Indicia of Nonobviousness

We next consider evidence of objective indicia of nonobviousness related to what Patent Owner identifies as its "Embodying Products," which Patent Owner contends "practice the claims of the '202 patent." PO Resp. 74. Patent Owner contends that the Embodying Products "did in fact

solve an otherwise unsolved need that others had failed to solve" and "received commercial success." *Id.* at 76–78.

As a brief summary of the legal standards we apply with regard to evidence of objective indicia of nonobviousness, we emphasize that such indicia are "only relevant to the obviousness inquiry 'if there is a nexus between the claimed invention and the [objective indicia of nonobviousness].'" *In re Affinity Labs of Tex., LLC*, 856 F.3d 883, 901 (Fed. Cir. 2017) (quoting *Ormco Corp. v. Align Tech., Inc.*, 463 F.3d 1299, 1312 (Fed. Cir. 2006)). A patentee is entitled to a presumption of nexus "when the patentee shows that the asserted objective evidence is tied to a specific product and that product 'embodies the claimed features, and is coextensive with them.'" *Fox Factory, Inc. v. SRAM, LLC*, 944 F.3d 1366, 1373 (Fed. Cir. 2019) (quoting *Polaris Indus., Inc. v. Arctic Cat, Inc.*, 882 F.3d 1056, 1072 (Fed. Cir. 2018) (quoting *Brown & Williamson Tobacco Corp. v. Philip Morris Inc.*, 229 F.3d 1120, 1130 (Fed. Cir. 2000))). If the patented invention is only a component of a commercially successful machine or process, the patentee is not entitled to a presumption of nexus. *Id.* (reaffirming the importance of the "coextensiveness" requirement). "[T]he purpose of the coextensiveness requirement is to ensure that nexus is only presumed when the product tied to the evidence of secondary considerations 'is the invention disclosed and claimed.'" *Id.* at 1374 (quoting *Demaco Corp. v. F. Von Langsdorff Licensing Ltd.*, 851 F.2d 1387, 1392 (Fed. Cir. 1988)). "[T]he degree of correspondence between a product and a patent claim falls along a spectrum. At one end of the spectrum lies perfect or near perfect correspondence. At the other end lies no or very little correspondence." *Id.* "A patent claim is not coextensive

with a product that includes a 'critical' unclaimed feature that is claimed by a different patent and that materially impacts the product's functionality." *Id.* at 1375.

However, "[a] finding that a presumption of nexus is inappropriate does not end the inquiry into secondary considerations." *Fox Factory*, 944 F.3d at 1375. "To the contrary, the patent owner is still afforded an opportunity to prove nexus by showing that the evidence of secondary considerations is the 'direct result of the unique characteristics of the claimed invention.'" *Id.* at 1373–74 (quoting *In re Huang*, 100 F.3d 135, 140 (Fed. Cir. 1996)). "Where the offered secondary consideration actually results from something other than what is both claimed and *novel* in the claim, there is no nexus to the merits of the claimed invention," meaning that "there must be a nexus to some aspect of the claim not already in the prior art." *In re Kao*, 639 F.3d 1057, 1068–69 (Fed. Cir. 2011) (emphasis in original). Additionally, there is no requirement that "objective evidence must be tied exclusively to claim elements that are not disclosed in a particular prior art reference in order for that evidence to carry substantial weight." *WBIP, LLC v. Kohler Co.*, 829 F.3d 1317, 1331 (Fed. Cir. 2016). A patent owner may show, for example, "that it is the claimed combination as a whole that serves as a nexus for the objective evidence; proof of nexus is not limited to only when objective evidence is tied to the supposedly 'new' feature(s)." *Id.*

Ultimately, the fact finder must weigh the secondary considerations evidence presented in the context of whether the claimed invention as a whole would have been obvious to a skilled artisan. *WBIP*, 829 F.3d at 1331–32. Once the patentee has presented a *prima facie* case of nexus,

the burden of coming forward with evidence in rebuttal shifts to the challenger "to adduce evidence to show that the commercial success was due to extraneous factors other than the patented invention." *Demaco*, 851 F.2d at 1393. Below we consider in more detail the evidence and argument provided by the parties with regard to any purported long-felt unsolved need, failed attempts by others, and commercial success in light of the alleged nexus to the required features of the Challenged Claims of the '202 patent.

1. Long-Felt, Unsolved Need / Failed Attempts by Others

The Federal Circuit has explained that "[l]ong-felt need is closely related to the failure of others," and that "[e]vidence] is particularly probative of obviousness when it demonstrates both that a demand existed for the patented invention, and that others tried but failed to satisfy that demand." *Eurand, Inc. v. Mylan Pharms., Inc.* (*In re Cyclobenzaprine Hydrochloride Extended-Release Capsule Patent Litig.*), 676 F.3d 1063, 1082 (Fed. Cir. 2012). Establishing a long-felt need requires objective evidence that the invention has provided a long-awaited, widely accepted, and promptly adopted solution to a problem existent in the art, or that others had tried but failed to solve that problem. *See In re Mixon*, 470 F.2d 1374, 1377 (CCPA 1973). Furthermore, one must demonstrate that "widespread efforts of skilled workers having knowledge of the prior art had failed to find a solution to the problem." *In re Allen*, 324 F.2d 993, 997 (CCPA 1963). Patent Owner's contentions and evidence fail to establish any failure of others, any unsatisfied demand, any long-awaited solution to a problem, or any other persuasive basis to show the existence of a long-felt need at the time of invention.

The entirety of Patent Owner's argument in the Patent Owner Response purporting to show "Long Feld [sic] Unsolved Need / Failed Attempt by Others" consists of two quotes from Federal Circuit cases and the following paragraph:

> In this case, there is no question that the invention of the '202 Patent did in fact solve an otherwise unsolved need that others had failed to solve. Mr. Wilhelmi makes clear that Patent Owner's customer, a significant worldwide supplier of petroleum products, expressed an "overwhelming" need for subsea tree installations capable of withstanding pressures up to 20Kpsi. Ex. 2009, ¶¶ 16-21; Ex. 2010. Further, Mr. Wilhelmi also confirms that this need was satisfied by the annulus stab and the isolated path as is recited in the claimed invention. Ex. 2009, ¶¶ 24-30. Accordingly, this constitutes significant evidence that the invention of the '202 Patent would not have been obvious to a [person of ordinary skill in the art].

PO Resp. 76–77. At the outset, Patent Owner mischaracterizes the evidence it cites, which does not reference an existing "overwhelming need," but instead states that "there was an overwhelming need brewing" in a particular region for installations at 20Kpsi pressures. Ex. 2009 ¶ 21 (quoting Ex. 2010, 2); *see also* Ex. 2030 ¶¶ 4–6 (discussing the same statement). Patent Owner does not explain in the Patent Owner Response how the "annulus stab" and "isolated path," both of which were known in the art, solved the need, and does not address any evidence to show a widespread effort of others that failed to solve the need. Notwithstanding the absence of evidence and argument, we consider Mr. Wilhelmi's testimony.

According to Mr. Wilhelmi, an engineering team working for Patent Owner spent approximately three years and a substantial amount of money in development costs "to develop a vertical mono-bore subsea tree that could withstand both high pressures and the high temperatures," identified

as 20Kpsi and 400° F. Ex. 2009 ¶¶ 24–25. Mr. Wilhelmi testifies that the customer provided specifications for a project, that the specifications "did not specifically call for a mono-bore vertical subsea tree assembly having an annulus stab," and that to meet the specifications "and to satisfy the pressure and temperature requirements," the inventors of the '202 patent "conceived the concept of using an annulus stab." *Id.* ¶¶ 27–28. On its face, Mr. Wilhelmi's testimony is unconvincing because the '202 patent does not purport to have invented the annulus stab, which was well known in the art. In this regard we credit the testimony of Mr. Parks over Mr. Wilhelmi, because Mr. Parks description of 'A' annulus stabs as "commonplace" is well supported by the various references he cites. *See* Ex. 1032 ¶¶ 14–15.

According to Mr. Wilhelmi, subsequently, "the high-level specification of the equipment Patent Owner agreed to supply against the contract requirements" required "that 'the annulus stabs seamlessly connect the annulus flow path from the tubing head spool, through the tubing hanger, and up through the Christmas tree via the lower tree assembly.'" *Id.* ¶ 30 (quoting Ex. 2012, 87). Mr. Wilhelmi also states that "the 20Kpsi tree" designed for the customer "included an annulus stab body which provides a conduit for the annulus fluid to flow between the tubing hanger and the Christmas tree." *Id.* ¶ 33. Mr. Wilhelmi offers no persuasive explanation for how the "annulus stab" solved the purported problem associated with high temperatures and pressures.

Mr. Wilhelmi also states that "to my knowledge," Petitioner "was also attempting to develop a mono-bore vertical subsea HPHT tree at the same time but did not have a commercially available system at the time." *Id.* ¶ 26. Mr. Wilhelmi does not explain what his knowledge is based on in this

regard, identifies no supporting evidence, and does not explain why a solution required a "commercially available system." *Id.* In other words, Mr. Wilhelmi's testimony leaves open the question of whether solutions existed, but not in what he characterizes as "a commercially available system at the time" and concerns Petitioner's efforts, but not the industry as a whole. Absent any persuasive explanation, we are not persuaded that the purported efforts of Petitioner, alone, are sufficient to show widespread efforts leading to failure. *See id.* ¶ 22 (stating that "there were approximately four (4) participants in the vertical mono-bore subsea tree market, namely, OSS, FMC, General Electric and Baker Hughes.").

Mr. Wilhelmi suggests that prior to the '202 patent, monobore tree assemblies allowed annulus fluid to flow throughout the plenum region, and "as a result" could only withstand pressures up to 15Kpsi and temperatures of 300° F. Ex. 2009 ¶ 17. Mr. Wilhelmi does not identify what his opinion is based on, and cites no supporting evidence. *See id.* Mr. Wilhelmi further states that Patent Owner's systems "are capable of operating at 20Kpsi without the need for an isolation sleeve." *Id.* ¶ 18. Missing from Mr. Wilhelmi's testimony is any explanation or support for the notion that Patent Owner's products satisfied the need for a high temperature, high pressure installation as a result of any claimed feature, including an annulus stab. In other words, there is no evidence merely including an annulus stab, as claimed, would allow any installation to operate at any particular high pressure or high temperature.

Moreover, we find that Petitioner shows that Mr. Wilhelmi's testimony is entitled to little, if any, weight, because he was unable to answer questions about tree products and conceded he was not a tree

designer and did not know, for example, whether a dual bore tree had an annulus stab. *See* Pet. Reply 23–24 (citing Ex. 1037, 46:11–13, 83:14–24, 109:22, 110:7–21, 142:22–143:10; Ex. 2018 ¶¶ 7–8).[19] Accordingly, based on the evidence presented by the parties, we find Patent Owner provided little to virtually no evidence of a purported long-felt, unsolved need, and of any failure by others to satisfy that need.

2. Commercial Success

Patent Owner contends that its "HPHT subsea tree products have received commercial success," because its products "won the successful bid from Patent Owner's customer, a significant worldwide supplier of petroleum products over the competitive bid submitted by Petitioner," and that customer "agreed to enter into a significant long-term commitment to purchase Patent Owner's HPHT subsea products and purchase all of its HPHT subsea assemblies from Patent Owner, despite these products being significantly more expensive than prior subsea tree assemblies." PO Resp. 77–78 (citing Ex. 2009 ¶¶ 41–47). Patent Owner provides no evidence of the amount of its own sales, its market share, or sales by

[19] Petitioner argues that in a district court proceeding Patent Owner accused Petitioner's product of infringing the '202 patent and the court held that "a materially identical system was commercially available before the '202 patent." Pet. Reply 23 (citing Ex. 2008); *see also id.* at 25–28 (arguing that Petitioner's competing installation was commercially available before Patent Owner's installation). Patent Owner generally disputes Petitioner's contentions concerning the district court proceeding and suggests it "may continue to dispute" the matter "on appeal to the Federal Circuit." PO Sur-reply 25–26, 26 n.4. We do not rely on any district court determinations as support for our determinations in this case.

competitors to provide any context to evaluate the commercial success it attributes to a single customer.

3. Nexus

Patent Owner does not address nor show in its Response a nexus between its purported Embodying Products and the purported evidence of a long-felt, unmet need for an installation that operates at a high temperature or pressure. With regard to commercial success, Patent Owner provides the conclusory assertion that "it is clear that the sales and commercial success of Patent Owner's HPHT subsea tree systems can be attributed solely to the inclusion of the featured isolated A-annulus flow path HPHT Subsea tree feature into the product," and that "Mr. Wilhelmi's own findings confirm that the HPHT Subsea tree feature has driven the significant commercial success." *Id.* at 77 (citing Ex. 2009 ¶¶ 41-47). Patent Owner offers no persuasive evidence in support of its arguments.

In its Sur-reply, Patent Owner argues for the first time that it is "entitled to a presumption of nexus," because "Petitioner does not challenge that the Embodying Product is the invention disclosed and claimed in June [']202." PO Sur-reply 23. To the contrary, Petitioner expressly argues that Patent Owner "fails to provide reliable evidence the [Embodying Products] embody the '202 patent." Pet. Reply 24. Indeed, Mr. Wilhelmi offers nothing more than a repetition of claim language followed by citations to various exhibits as purported support for showing that the Embodying Products practice the claimed invention. Ex. 2009 ¶¶ 34–39. We find such a cursory explanation insufficient.

Even assuming the Embodying Products embody the '202 patent claims, Patent Owner's contention that it is entitled to a presumption of

nexus is incorrect.[20] Patent Owner recognizes that "[p]resuming a nexus is appropriate 'when the patentee shows that the asserted objective evidence is tied to a specific product and that product 'embodies the claimed features, and is coextensive with them.'" PO Sur-reply 23–24 (quoting *Fox Factory*, 944 F.3d at 1373, (quoting *Polaris*, 882 F.3d at 1072)). Patent Owner fails to carry this burden and does not even attempt to show that the Embodying Products are "coextensive" with the claimed features. We agree with Petitioner that Patent Owner "offers no evidence the [Embodying Products] were coextensive with the '202 claims." Pet. Reply 25. As noted by Petitioner, the evidence shows, to the contrary, that the Embodying Products Patent Owner relies on included "Key Features" and "unique components and systems" not claimed in the '202 patent. *Id.* at 25 (citing Ex. 2011, 6–11; Ex. 2012, 30). Patent Owner does not refute these arguments. *See* Sur-reply, 23–27.

Nor does Patent Owner show that "the evidence of secondary considerations is the 'direct result of the unique characteristics of the claimed invention.'" *Fox Factory*, 944 F.3d at 1373–74 (quoting *In re Huang*, 100 F.3d 135, 140 (Fed. Cir. 1996)). To do so, Patent Owner would need to show that satisfaction of the alleged long-felt, unmet need for a high pressure, high temperature installation or commercial success was the direct

[20] Petitioner argues that Mr. Wilhelmi was unqualified to support Patent Owner's arguments that it's Embodying Products practice the claims of the '202 patent and does not explain how he reached his conclusions. Pet. Reply 23–24. Petitioner does not affirmatively identify any particular limitation of any Challenged Claim not practiced by the Embodying Products. For purposes of our Decision, we assume the Embodying Products practice claims of the '202 patent.

result of the unique characteristics of the claimed invention. The only evidence Patent Owner provides is a conclusory assertion that its employee, Mr. Wilhelmi, "confirms that this need was satisfied by the annulus stab and the isolated path as is recited in the claimed invention." PO Resp. 76–77 (citing Ex. 2009 ¶¶ 24–30).

There is no dispute that none of the Challenged Claims recite or otherwise require an installation that operates at any particular pressure or temperature, much less an especially high temperature or pressure. Patent Owner's argument is unsupported by the '202 patent, itself, which makes no mention of disclosing any benefit of the installation it discloses in regards to temperature or pressure, but instead discusses the benefits of avoiding unwanted exposure to deleterious fluids in the plenum. *See, e.g.*, Ex. 1001, 1:29–48. Patent Owner fails to show that the asserted evidence of commercial success is a "direct result of the unique characteristics of the claimed invention," and, therefore, fails to show the necessary nexus. *Fox Factory*, 944 F.3d at 1373–74 (internal quotation omitted).

N. Collective Consideration of the Graham *Factor*

Having considered for each ground of obviousness each of the *Graham* factors individually, we now consider them collectively. The scope and content of the prior art, the differences between the prior art and the Challenged Claims, and the level of ordinary skill in the art heavily favor Petitioner's contention that the Challenged Claim would have been obvious over the combinations of references asserted by Petitioner for the reasons provided above. Petitioner also provides a persuasive rationale in support of the asserted modifications of the Figure 7 Completion of June '946 and for

the combinations of references asserted by Petitioner for the reasons provided above.

Further, having considered the objective evidence of indicia of nonobviousness, Patent Owner does not show the requisite nexus between the alleged objective indicia of nonobviousness and the Challenged Claims of the ’202 patent. Moreover, even if Patent Owner had shown the necessary nexus, the objective evidence of indicia of nonobviousness identified by Patent Owner fails to show persuasive evidence of a long-felt, unmet need satisfied by the invention of any of the Challenged Claims. Patent Owner also fails to show persuasive evidence of commercial success. Thus, Patent Owner’s objective evidence of indicia of nonobviousness provides very little, if any, support for the nonobviousness of the Challenged Claims.

On the whole, we find that the information provided by Petitioner and Patent Owner in consideration of the *Graham* factors collectively demonstrates by a preponderance of the evidence, with respect to the ’202 patent, that the subject matter of claims 1–7 would have been obvious over June ’946; that the subject matter of claim 8 would have been obvious over June ’946 and June ’308; that the subject matter of claims 9, 10, and 12–15 would have been obvious over June ’946 and Cameron; that the subject matter of claim 11 would have been obvious over June ’946, Cameron, and June ’308; that the subject matter of claims 9, 10, and 12–15 would have been obvious over June ’946, API 17D, and June ’354; that the subject matter of claim 11 would have been obvious over June ’946, API 17D, June ’354, and June ’308; that the subject matter of claims 1–7, 9, 10, and 12–15 would have been obvious over Reimert, Donald, and Cameron;

and that the subject matter of claims 8 and 11 would have been obvious over Reimert, Donald, Cameron, and June '308.

IV. CONCLUSION[21]

Claim(s)	35 U.S.C. §	Reference(s)	Claim(s) Shown Unpatentable	Claims Not Shown Unpatentable
1–7	103	June '946	1–7	
8	103	June '946, June '308	8	
9, 10, 12–15	103	June '946, Cameron	9, 10, 12–15	
11	103	June '946, Cameron, June '308	11	
9, 10, 12–15	103	June '946, API 17D, June '354	9, 10, 12–15	
11	103	June '946, API 17D, June '354, June '308	11	
1–7, 9, 10, 12–15	103	Reimert, Donald, Cameron	1–7, 9, 10, 12–15	
8, 11	103	Reimert, Donald, Cameron, June '308	8, 11	

[21] Should Patent Owner wish to pursue amendment of the challenged claims in a reissue or reexamination proceeding subsequent to the issuance of this decision, we draw Patent Owner's attention to the April 2019 *Notice Regarding Options for Amendments by Patent Owner Through Reissue or Reexamination During a Pending AIA Trial Proceeding.* *See* 84 Fed. Reg. 16,654 (Apr. 22, 2019). If Patent Owner chooses to file a reissue application or a request for reexamination of the challenged patent, we remind Patent Owner of its continuing obligation to notify the Board of any such related matters in updated mandatory notices. *See* 37 C.F.R. § 42.8(a)(3), (b)(2).

V. ORDER

In consideration of the foregoing, it is hereby:

ORDERED that claims 1–15 of the ’202 patent have been proven to be *unpatentable*;

FURTHER ORDERED that Petitioner’s Motion to Exclude (Paper 31) is *denied*; and

FURTHER ORDERED that, because this is a Final Written Decision, the parties to the proceeding seeking judicial review of the Decision must comply with the notice and service requirements of 37 C.F.R. § 90.2.

For PETITIONER:

Joshua Griswold
Craig Deutsch
Bret Winterle
Michael Vincent
Matthew Colvin
FISH & RICHARDSON P.C.
griswold@fr.com
deutsch@fr.com
winterle@fr.com
vincent@fr.com
colvin@fr.com

For PATENT OWNER:

Bruce Rose
Christopher TL Douglas
ALSTON & BIRD LLP
bruce.rose@alston.com
christopher.douglas@alston.com