Trials@uspto.gov
571-272-7822

Paper 97
Date: November 30, 2020

UNITED STATES PATENT AND TRADEMARK OFFICE

BEFORE THE PATENT TRIAL AND APPEAL BOARD

PRECISION PLANTING, LLC and AGCO CORP.,
Petitioner,

v.

DEERE & COMPANY,
Patent Owner.

IPR2019-01046
Patent 9,480,199 B2

Before MICHAEL W. KIM, *Vice Chief Administrative Patent Judge*, BARRY L. GROSSMAN, and TIMOTHY J. GOODSON, *Administrative Patent Judges.*

GOODSON, *Administrative Patent Judge*.

JUDGMENT
Final Written Decision
Determining No Challenged Claims Unpatentable
Denying in Part and Dismissing in Part Petitioner's Motion to Exclude
Dismissing Patent Owner's Motion to Exclude
35 U.S.C. § 318(a)

I. INTRODUCTION

A. Background and Summary

Precision Planting, LLC and AGCO Corp. (collectively, "Petitioner") filed a Petition (Paper 4, "Pet.") requesting *inter partes* review of claims 1 and 3 of U.S. Patent No. 9,480,199 B2 (Ex. 1001, "the '199 patent"). Deere & Company ("Patent Owner") filed a Preliminary Response. Paper 9. With our authorization, the parties filed additional pre-institution briefing. *See* Paper 11; Paper 12. We instituted an *inter partes* review on both challenged claims on the sole ground asserted in the Petition. *See* Paper 17 ("Dec. on Inst."). After institution of trial, Patent Owner filed a Patent Owner Response. (Paper 36, "PO Resp."), Petitioner filed a Reply (Paper 59, "Pet. Reply"), and Patent Owner filed a Sur-Reply (Paper 71, "Sur-Reply"). We held a hearing on August 31, 2020, a transcript of which is included in the record. *See* Paper 94 ("Tr."). The parties have also filed motions to exclude, which we address below in Section II.

We have authority under 35 U.S.C. § 6. Petitioner bears the burden of proving unpatentability of the challenged claims, and the burden of persuasion never shifts to Patent Owner. *Dynamic Drinkware, LLC v. Nat'l Graphics, Inc.*, 800 F.3d 1375, 1378 (Fed. Cir. 2015). To prevail, Petitioner must prove unpatentability by a preponderance of the evidence. *See* 35 U.S.C. § 316(e) (2018); 37 C.F.R. § 42.1(d) (2019). This Final Written Decision is issued pursuant to 35 U.S.C. § 318(a) and 37 C.F.R. § 42.73. For the reasons discussed below, we determine that Petitioner has not shown by a preponderance of the evidence that claims 1 and 3 of the '199 patent are unpatentable.

B. Real Parties in Interest

Petitioner lists the following entities as real parties in interest: Precision Planting, LLC; AGCO Corp.; Monsanto Co.; and Bayer AG. *See* Pet. 7. Patent Owner lists only itself as a real party in interest. Paper 6, 1.

C. Related Matters

Patent Owner has asserted the '199 patent against Petitioner in *Deere & Company v. AGCO Corporation,* Civil Action No. 1:18-cv-00827-CFC in the U.S. District Court for the District of Delaware. Pet. 8; Paper 6, 1.

In addition, Petitioner lists the following Board proceedings as related matters:

Case No.	Challenged Patent
IPR2019-01044	U.S. Patent No. 8,813,663
IPR2019-01047	U.S. Patent No. 9,510,502
IPR2019-01048	U.S. Patent No. 9,686,906
IPR2019-01050	U.S. Patent No. 9,807,922
IPR2019-01051	U.S. Patent No. 9,807,924
IPR2019-01052	U.S. Patent No. 9,820,429
IPR2019-01053	U.S. Patent No. 9,861,031
IPR2019-01054	U.S. Patent No. 10,004,173
IPR2019-01055	U.S. Patent No. 9,699,955

Pet. 8.

D. The '199 Patent

The '199 patent issued November 1, 2016 from an application filed April 16, 2014. Ex. 1001, at [45], [22]. The '199 patent states that it is a continuation of Application No. 13/943,561, filed July 16, 2013 (which matured into the '663 patent that is the subject of IPR2019-01044), which is

a continuation of application No. 12/364,010, filed February 2, 2000. *Id.* at [63].

The ’199 patent relates to a seeding machine having a seed metering system and a seed delivery system for delivering seed from the meter to the ground. Ex. 1001, 1:14–16. In the “Background of the Invention,” the ’199 patent explains that in known seed delivery systems, differences in how individual seeds exit the metering system and drop through the seed delivery tubes cause undesirable variations in seed spacing. *Id.* at 1:62–65. The ’199 patent describes that its system reduces seed spacing variability by capturing the seed, and then moving it, on a controlled descent from the point at which it exits the metering system to a point near the bottom of the seed trench, so that the seed is discharged at a substantially zero horizontal speed relative to the ground. *Id.* at 2:25–40.

Referring to Figure 3 of the ’199 patent (reproduced below), seed stored in a seed hopper is provided to a seed meter that uses vacuum disk 50 to meter the seed to seed delivery system 28 that carries the seed to a planting furrow. Ex. 1001, 3:19–24.

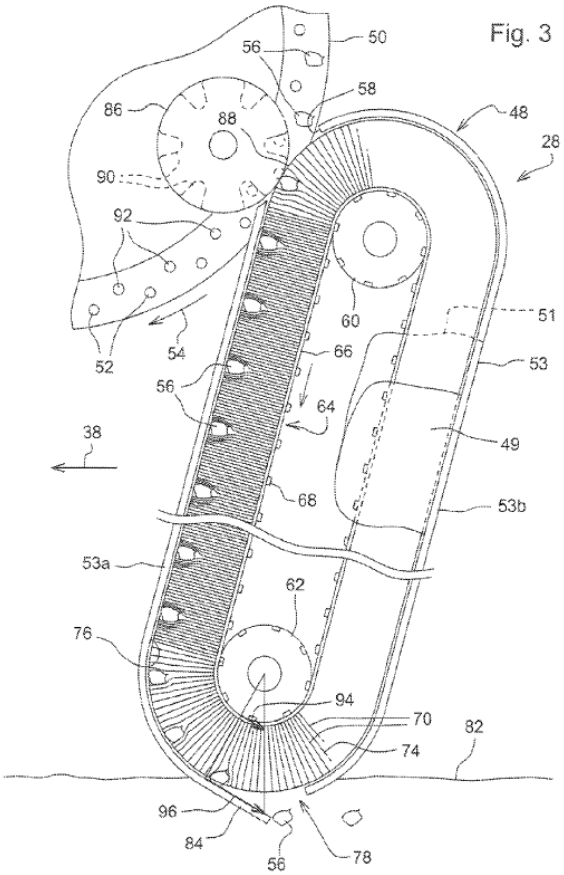

Figure 3 depicts an enlarged side view of a seed delivery system of one embodiment of the invention. Ex. 1001, 2:46–49.

Metering disk 50 is generally flat with a plurality of apertures 52 that collect seeds 56 from a seed pool, which "adhere to the disk by air pressure differential on the opposite sides of the disk 50 in a known manner." Ex. 1001, 3:37–41. Seed delivery system 28 "includes a housing 48 positioned adjacent the seed disk 50." Ex. 1001, 3:41–45. Housing 48 includes upper opening 58 that "admits the seed from the metering disk 50 into the housing," and "lower housing opening 78 . . . positioned as close to the

bottom 80 of the seed trench as possible," through which the seed is discharged into the seed trench. *Id.* at 3:50–54, 62–64, 4:43–44.[1]

Pulleys 60, 62, mounted inside housing 48, support belt 64 for rotation within the housing. Ex. 1001, 3:54–58. The belt has elongated bristles 70, which serve to capture the seed. *Id.* at 3:58, 4:25–26. Loading wheel 86 adjacent upper opening 58 is positioned such that the path of the seeds on disk 50 brings the seeds into nip 88 formed between the loading wheel and distal ends 74 of bristles 70. *Id.* at 4:1–4:6.

As belt 64 rotates counterclockwise around the pulleys, the curve of the pulley causes distal ends 74 of bristles 70 to separate from one another. Ex. 1001, 4:15–20. When the disk brings the seeds into nip 88, the seeds are transferred from the seed meter to the delivery system. *Id.* at 4:22–27. Specifically, as the curved path straightens, the bristle ends close upon themselves and capture the seeds. *Id.* at 4:28–32. As the belt continues to move, bristles 70 convey the seeds downward to housing lower opening 78, with sidewall 53 of the housing cooperating with bristles 70 to hold the seed in the bristles. *Id.* at 4:32–36.

E. Challenged Claims

Petitioner challenges claims 1 and 3. Claim 1 is reproduced below, with bracketed labels as added by Petitioner:

> 1. [Pre] A seeding machine, comprising:
> [a] a seed meter which includes a metering member with a plurality of apertures in a circular array, [b] the seed meter

[1] The '199 patent specifies that "[t]he term 'upper opening' shall be construed to mean an open area before the side wall segment 53a in the direction of belt travel and the term 'lower opening' shall mean an open area after the side wall segment 53a in the direction of belt travel." *Id.* at 5:35–39.

> configured to move individual seeds sequentially along a first path to a release position;
> [c] a delivery system which moves the individual seeds in a second path from the release position to a discharge position adjacent a seed furrow formed in soil beneath the seeding machine; and
> [d] a blocking loading surface which blocks movement of the individual seeds along the first path and permits redirection and movement of the individual seeds along the second path as the individual seeds are moved to the discharge position.

Ex. 1001 at 7:50–8:9; *see also* Pet. 57–80 (adding labels). Claim 3 depends from claim 1 and adds that "the metering member is configured to use a pressure differential to retain individual seeds on the metering member." Ex. 1001, 8:17–19.

F. Asserted Ground of Unpatentability

Petitioner contends that the challenged claims are unpatentable based on the following ground:

References	Basis[2]	Claims Challenged
Hedderwick,[3] Koning,[4] and Yamahata[5]	§ 103(a)	1 and 3

Pet. 43. In support of its proposed ground, Petitioner relies on the testimony of Mr. Douglas S. Prairie. *See* Ex. 1002; Ex. 1135. Patent Owner relies on

---

[2] The relevant sections of the Leahy-Smith America Invents Act ("AIA"), Pub. L. No. 112–29, took effect on March 16, 2013. Because the application that issued as the '199 patent states that it is a continuation of an application filed before March 16, 2013, we apply the pre-AIA versions of this statute. *See* 35 U.S.C. § 100(i).
[3] GB 2,057,835 A, published Apr. 8, 1981 (Ex. 1003, "Hedderwick").
[4] US 4,193,523, issued Mar. 18, 1980 (Ex. 1004, "Koning").
[5] Japanese Utility Model Registration Publication S56-24815U, published Mar. 6, 1981 (Ex. 1014). Citations to Yamahata in this decision refer to the English translation in Exhibit 1011.

the testimony of Dr. James L. Glancey. *See* Ex. 2205.[6] The record also includes testimony from several witnesses on topics relating to objective indicia of nonobviousness.

II. MOTIONS TO EXCLUDE

The party moving to exclude evidence bears the burden of proving that it is entitled to the relief requested—namely, that the material sought to be excluded is inadmissible under the Federal Rules of Evidence ("FRE"). *See* 37 C.F.R. §§ 42.20(c), 42.62(a) (2019).

A. Petitioner's Motion to Exclude

1. Brush Belt Videos and Photographs

Petitioner moves to exclude Exhibits 2141–2143, 2186, 2187, and 2198 under FRE 901 as lacking authentication. Paper 72, 1, 4–10. Petitioner also argues that the testimony of Dr. Glancey regarding these

---

[6] Petitioner argues that Dr. Glancey's testimony is unreliable because he "is a professional expert witness" who has served as an expert in 144 matters regarding a range of technologies, but has never served as an expert in seed planting technologies; because his opinions have been excluded by courts on three occasions; because he holds four patents that do not relate to seed planting technologies; because he allegedly "conceded that he does not understand what the test for obviousness of a patent was in 2003 or in 2009;" and because his answers at his deposition were allegedly inadequate in various ways. *See* Pet. Reply 2–4. Patent Owner responds that Dr. Glancey is a mechanical engineering professor and professional engineer who has "extensive person and professional experience with farming and seed-planting equipment" and that the three instances in which his testimony was excluded were personal injury litigations unrelated to seed-planting equipment. Sur-Reply 32–34. Patent Owner also attacks the qualifications of Mr. Prairie and asserts that his declaration and deposition testimony has been flawed in various ways. *Id.* We have considered Petitioner's and Patent Owner's arguments in assessing the weight to be given to Dr. Glancey's and Mr. Prairie's testimony. We note that neither party has moved to exclude Dr. Glancey's or Mr. Prairie's testimony.

exhibits should be excluded. *Id.* at 10–12. The exhibits at issue are videos and photographs of brush belts. Petitioner argues that these videos and photographs are unreliable and should be excluded, because Deere has not provided sufficient information about the brush belt that is the subject of the videos and photographs and the circumstances in which the videos and photographs were made. *Id.* at 4–8. Petitioner further argues that Dr. Glancey's testimony does not authenticate the videos, because he did not create them and was unable to answer certain questions about the brush belts' characteristics during his deposition. *Id.* at 9–10.

Petitioner's arguments do not persuade us that Patent Owner's showing is insufficient under FRE 901. A proponent's "burden of proof for authentication is slight." *Lexington Insurance Co. v. Western Pennsylvania Hospital*, 423 F.3d 318, 328 (3rd Cir. 2015). Under FRE 901, the proponent must make a showing "sufficient to support a finding that the item is what the proponent claims it is." Fed. R. Evid. 901(a); *see also United States v. Coohey*, 11 F.3d 97, 99 (8th Cir. 1993) ("To meet this standard, the proponent need only demonstrate a rational basis for its claim that the evidence is what the proponent asserts it to be."). Once that threshold is satisfied, "the evidence goes to the [fact-finder] and it is the [fact-finder] who will ultimately determine the authenticity of the evidence." *Threadgill v. Armstrong World Indus., Inc.*, 928 F.2d 1366, 1375 (3rd Cir. 1991). Here, Dr. Glancey's testimony is adequate to support a finding that these videos and photographs are what Patent Owner claims they are, i.e., brush belts being operated in various ways. *See* Ex. 2205 ¶¶ 166–170. Petitioner's criticisms of the videos and photographs go to the weight that should be assigned to the videos and photographs, and Dr. Glancey's testimony about

them, and we have considered Petitioner's arguments in assessing the weight those materials should carry.

Additionally, the nature of our proceedings, in which the same panel that decides admissibility also serves as the fact-finder, disfavors exclusion in these circumstances. *See Corning Inc. v. DSM IP Assets B.V.*, IPR2013-00053, Paper 66, 19 (PTAB May 1, 2014) (sitting as a non-jury tribunal, the Board may assign appropriate weight to evidence presented) (citing *Donnelly Garment Co. v. NLRB*, 123 F.2d 215, 224 (8th Cir. 1941)). As the *Donnelly* court observed, "[o]ne who is capable of ruling accurately upon the admissibility of evidence is equally capable of sifting it accurately after it has been received . . . ." 123 F.2d at 224.

Thus, we deny Petitioner's motion to exclude the videos, photographs, and Dr. Glancey's testimony about those videos and photographs.

2. Dr. Glancey's Redirect Testimony

Next, Petitioner argues that Dr. Glancey's testimony in response to leading questions should be excluded. Paper 72, 12–13. The portions of Dr. Glancey's deposition testimony that Petitioner argues should be excluded are his responses during redirect at Exhibit 1115, pages 267–68. *See id.* We do not rely on those portions of Dr. Glancey's testimony, so we dismiss as moot this aspect of Petitioner's motion.

3. Exhibits 2249 and 2257

Finally, Petitioner argues that Exhibits 2249 and 22

57 should be excluded as untimely. Paper 72, 13. Because we do not rely on those exhibits in our analysis, we dismiss as moot this aspect of Petitioner's motion as well.

4. Conclusion

For the foregoing reasons, we deny Petitioner's motion to exclude as to Exhibits 2141–2143, 2186, 2187, and 2198, and we dismiss as moot the remainder of Petitioner's motion to exclude.

B. Patent Owner's Motion to Exclude

Patent Owner moves to exclude Exhibits 1049–50, 1052, 1054, 1068, 1073, 1077–78, 1086–87, 1089, 1091–92, 1103, 1113–15, 1123, 1131–33 and paragraphs 89–137 of Exhibit 1135. Paper 75, 15. Most of these contested materials relate to the parties' arguments on objective indicia of nonobviousness, which is an issue we do not reach. Accordingly, we do not rely on most of these exhibits in our analysis. The contested exhibits that we do cite in this Decision are Exhibits 1113, 1114, 1115, and 1133. These exhibits are transcripts from Dr. Glancey's depositions. However, Patent Owner does not actually seek exclusion of those exhibits, only consideration of errata sheets that Dr. Glancey prepared for those transcripts, which Patent Owner filed as Exhibits 2266–69. *See id.* at 10–11. We also cite below to Exhibit 1135, which is Mr. Prairie's Reply Declaration, but not the paragraphs Patent Owner challenges, which relate to objective indicia of nonobviousness. Because we do not rely on the materials that Patent Owner seeks to exclude, and also because we would ultimately find for Patent Owner even without excluding these exhibits, we dismiss as moot Patent Owner's motion to exclude.

III. LEVEL OF ORDINARY SKILL IN THE ART

The level of skill in the art is "a prism or lens" through which we view the prior art and the claimed invention, supplying "an important guarantee of objectivity in the process" of assessing an obviousness case. *Okajima v. Bourdeau*, 261 F.3d 1350, 1355 (Fed. Cir. 2001). Factors pertinent to a

determination of the level of ordinary skill in the art include: (1) the inventor's educational level; (2) type of problems encountered in the art; (3) prior art solutions to those problems; (4) rapidity with which innovations are made; (5) sophistication of the technology; and (6) educational level of workers active in the field. *Envtl. Designs, Ltd. v. Union Oil Co*., 713 F.2d 693, 696–697 (Fed. Cir. 1983) (citing *Orthopedic Equip. Co. v. All Orthopedic Appliances, Inc.*, 707 F.2d 1376, 1381–82 (Fed. Cir. 1983)). "Not all such factors may be present in every case, and one or more of these or other factors may predominate in a particular case." *Id*. Moreover, "[t]hese factors are not exhaustive but are merely a guide to determining the level of ordinary skill in the art." *Daiichi Sankyo Co. Ltd, Inc. v. Apotex, Inc.*, 501 F.3d 1254, 1256 (Fed. Cir. 2007).

Petitioner proposes that a person of ordinary skill in the art "would have had either (1) a bachelor's degree plus four years of experience in mechanical engineering, agricultural engineering, or a related field; or (2) a master's degree plus two years of experience in mechanical engineering, agricultural engineering, or a related field." Pet. 57 (citing Ex. 1002 ¶¶ 21–22). In the testimony the Petition cites in support of that proposal, Mr. Prairie lists factors that are typically considered in assessing the level of ordinary skill in the art, and then states "[b]ased on these factors together with my experience and expertise," his opinion of the level of ordinary skill in the art is the same as Petitioner proposes. Ex. 1002 ¶¶ 21–22. This conclusory testimony is entitled to little weight. *See* 37 C.F.R. § 42.65(a) ("Expert testimony that does not disclose the underlying facts or data on which the opinion is based is entitled to little or no weight.").

Patent Owner proposes that the ordinarily skilled artisan "would have an undergraduate degree in mechanical engineering, agricultural

engineering, or closely related field" plus "about two years of experience designing agricultural products or related machinery in industry or academia." PO Resp. 2–3 (citing Ex. 2205 ¶¶ 47–52). Patent Owner also proposes that the level of ordinary skill in the art could be achieved without an undergraduate engineering degree, through "about five years of experience designing agricultural products or related machinery." *Id.* Dr. Glancey explains that, in his opinion, Petitioner's proposed level of ordinary skill is "too restrictive and sets the level of ordinary skill in the art of the '199 Patent too high." Ex. 2205 ¶ 49. Dr. Glancey provides three reasons why he holds this opinion: (1) undergraduate engineering curriculums in place in February 2009 focused on design at the freshman level and continued this focus throughout the student's degree program, thus mitigating the need for significant post-graduate design experience (*id.* at ¶ 50); (2) Masters programs in engineering focus on research for publication in peer-reviewed journals, rather than designing products for industry (*id.* at ¶ 51); and (3) engineering technicians, who may not have formal engineering degrees, "often have years' worth of relevant hands-on experience," which, in Dr. Glancey's opinion, qualifies him or her to be "considered POSITAs with respect to the '199 Patent" (*id.* at ¶ 52).

Based on the evidence and arguments of record, we determine that the evidence favors Patent Owner's proposed level of skill. Our determination is primarily based on Dr. Glancey's analysis and reasons summarized above, as well as the prior art of record and the sophistication of the technology of the '199 patent. We have considered Mr. Prairie's opinion, but we give that testimony minimal weight due to the lack of supporting explanation.

Accordingly, we adopt Patent Owner's proposed level of ordinary skill in the art. Specifically, we determine that a person of ordinary skill in

the art would have had an undergraduate degree in mechanical engineering, agricultural engineering, or a similar field, and two years of experience designing agricultural products or related machinery. Alternatively, a person of ordinary skill in the art would have had five years of experience designing agricultural products or related machinery, without a four-year undergraduate engineering degree.

However, we note that the differences between the parties' proposed definition of the level of ordinary skill in the art are not determinative. The analysis below would be materially the same under either party's proposed definition.

IV. CLAIM CONSTRUCTION

"In an *inter partes* review proceeding, a claim of a patent . . . shall be construed using the same claim construction standard that would be used to construe the claim in a civil action under 35 U.S.C. 282(b)." *See* Changes to the Claim Construction Standard for Interpreting Claims in Trial Proceedings Before the Patent Trial and Appeal Board, 83 Fed. Reg. 51,340, 51,358 (Oct. 11, 2018) (amending 37 C.F.R. § 42.100(b) effective November 13, 2018) (now codified at 37 C.F.R. § 42.100(b) (2019)).[7] That standard "includ[es] construing the claim in accordance with the ordinary and customary meaning of such claim as understood by one of ordinary skill in the art and the prosecution history pertaining to the patent." *Id.*; *see also Phillips v. AWH Corp.*, 415 F.3d 1303 (Fed. Cir. 2005) (en banc).

We determine that no terms require express construction to resolve the parties' dispute. *See Vivid Techs., Inc. v. Am. Sci. & Eng'g, Inc.*, 200 F.3d 795, 803 (Fed. Cir. 1999) (claim terms need only be construed "to the extent

[7] The Petition in this case was filed May 29, 2019. *See* Paper 5, 1.

necessary to resolve the controversy"); *see also Nidec Motor Corp. v. Zhongshan Broad Ocean Motor Co.*, 868 F.3d 1013, 1017 (Fed. Cir. 2017) (applying *Vivid Techs.* in the context of an *inter partes* review).

V. OBVIOUSNESS OVER HEDDERWICK, KONING, AND BENAC

A. Legal Standards for Obviousness

In *Graham v. John Deere Co. of Kansas City*, 383 U.S. 1 (1966), the Supreme Court set out a framework for assessing obviousness under § 103 that requires consideration of four factors: (1) the "level of ordinary skill in the pertinent art," (2) the "scope and content of the prior art," (3) the "differences between the prior art and the claims at issue," and (4) when in evidence, "secondary considerations" of non-obviousness such as "commercial success, long-felt but unsolved needs, failure of others, etc." *Id.* at 17–18. When a combination of references together discloses all of the limitations in a claim, the Board "must determine whether there was an 'apparent reason to combine the known elements in the fashion claimed by the patent at issue,' and whether a person of skill in the art at the time of the invention would have had a 'reasonable expectation of success' in pursuing that combination.'" *Los Angeles Biomedical Research Institute v. Eli Lilly & Co.*, 849 F.3d 1049, 1064 (Fed. Cir. 2017) (quoting *KSR Int'l Co. v. Teleflex Inc.*, 550 U.S. 398, 406 (2007) and *Genzyme Therapeutic Prods. Ltd. v. Biomarin Pharm. Inc.*, 825 F.3d 1360, 1373 (Fed. Cir. 2016)).

B. Summary of Cited Prior Art References

1. Hedderwick

Hedderwick relates to a precision seeder, which it defines as "a seeding device able to deposit single seeds at predetermined spacings." Ex. 1003, 1:5–8. The seeder includes a seed hopper that transfers seed to a rotating vacuum disc, which has orifices around its periphery that receive

and retain seeds by pressure differential. *Id.* at 3:46–52. Figure 2 is reproduced below:

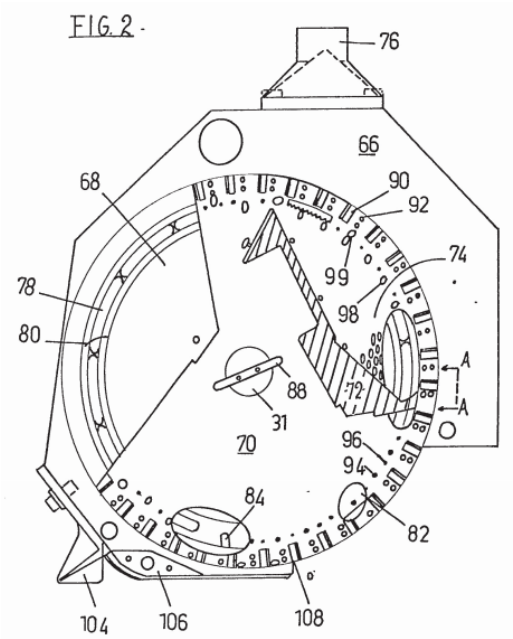

Figure 2 depicts a side elevation view of a seeder casing with the disc in place and with a surface portion broken away to illustrate the operation of the seeder. *Id.* at 1:100–101.

The vacuum disc rotates in a counterclockwise direction, past various devices, to ensure that a single seed is retained by the orifice, and continues to rotate until the "seeds have passed the end of vacuum inlet 78 at about 7 o'clock." Ex. 1003, 3:45–61. When the seeds' "associated vacuum holes 94 are in register with recess 84 in the wear plate 80," the seeds drop into a cell bounded by fins 90. *Id.* at 3:55–63. The seed falls from the cell when it reaches drop off lip 108, which is positioned slightly past bottom dead center. *Id.* at 3:66–73.

Hedderwick describes a second embodiment for use when "the vertical distance to be travelled by the seeds is greater." Ex. 1003, 4:2–5. Figure 4 is reproduced below:

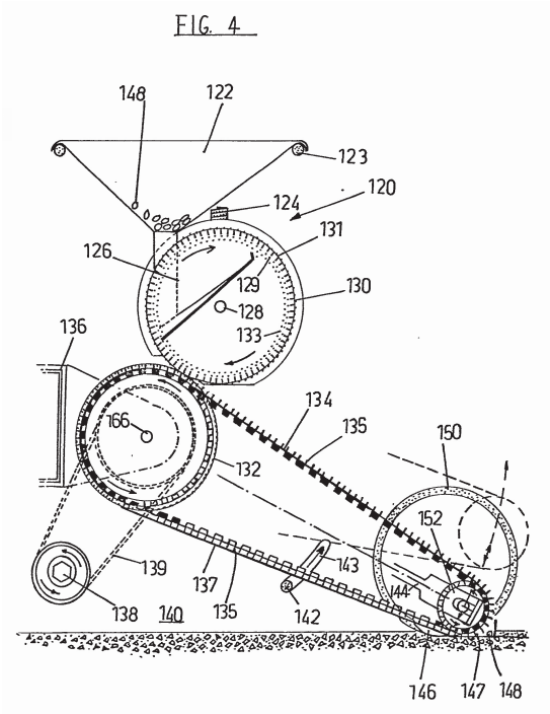

Figure 4 depicts a side elevation view of a seeder with parts broken away. *Id.* at 1:108–109.

Disc 130 of the second embodiment can have the same construction as disc 70 shown in Figure 2, although disc 130 rotates in a clockwise direction in Figure 4. *Id.* at 4:10–13, 5:51–53. "The major change in the seeder is the provision of an endless belt 134 which has a series of fins 135 projecting upwardly therefrom." *Id.* at 4:23–25. Fins 135, together with casing 137 and belt 134, define a series of moving cells. *Id.* at 4:23–28; Fig. 4. These "cells are synchronised to align with orifices 129 of disc 130," such that when disc 130 releases a seed it is released into a cell and each cell carries a seed. *Id.* at 4:28–5:5. Belt 134 passes over idler sprocket 152 and driven sprocket 132, which drives the belt and thus seeds 148 in the cells, to an end of casing 137 where the seed is discharged. *Id.* at 5:6–7, 74–78; Fig. 4.

2. Koning

Koning "relates to a planting machine for potatoes, bulbs or similar seed crop." Ex. 1004, 1:5–6. Figure 4 is reproduced below:

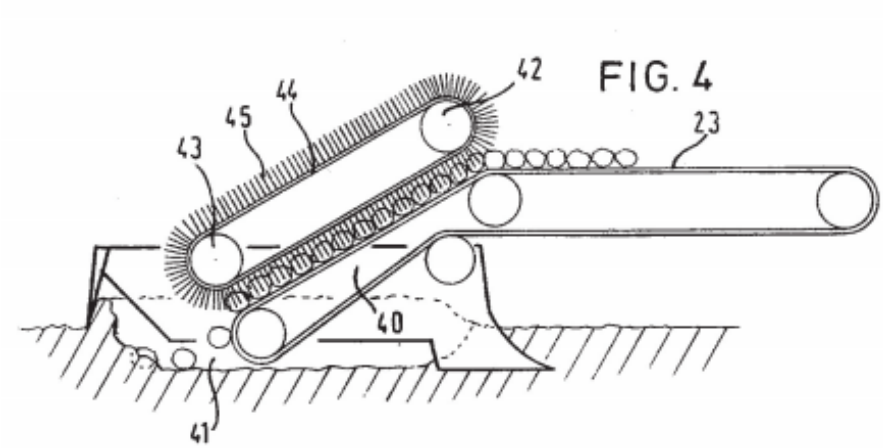

Figure 4 depicts an end part of a planting machine schematically in a side view. *Id.* at 3:32–33.

The planting machine includes conveying member 23 having part 40 that extends in a backward direction to a point in furrow 41. *Id.* at 5:3–6. Belt 44 is above part or portion 40 of conveying member 41, is guided around rollers 42 and 43, and includes brush hairs 45. *Id.* at 5:6–8. Brush hairs 45 of belt 44 hold the seed crop on part 40 of belt or conveying member 23 so that the seed crop delivered by the conveying members are delivered at "the same distance in relation to each other in the furrow 41." *Id.* at 5:8–14. Specifically, "the brush hairs hold the potatoes or the like lying on the conveying surface [23] till the moment that they leave the belt." *Id*. at 3:16–18. Thus, in Koning, it is the combination of two belts or conveying members, belt 44 with brush hairs 45, *and* belt 23 that function together to convey seeds to furrow 41. *Id.* at 5:11–14. By holding the potatoes or the like "till the very last moment . . . the velocity of the potatoes in relation to each other is completely defined. Under all circumstances a regular distribution of the potatoes in the furrow is obtained." *Id.* at 3:18–22.

3. Yamahata

Yamahata relates to "a device for guiding falling seeds in a vacuum seeder." Ex. 1011, 2:26–27. The vacuum seeder includes a rotating seed

board in which a vacuum is created to suction seeds into seed holes, and when the vacuum is shut off, the seeds drop from the seed holes. *Id.* at 2:29–34. Figures 1 and 2 are reproduced below.

FIG. 1

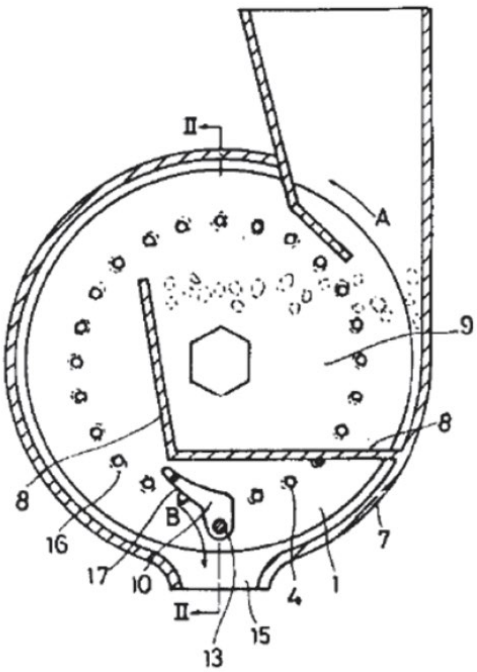

FIG. 2

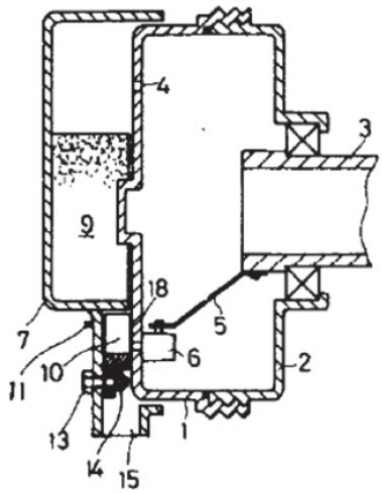

Figure 1 depicts a cross-sectional view showing a vacuum seeder using an exemplary guide device, and Figure 2 is a cross-sectional view from II-II in Figure 1. Ex. 1011, 4:27–30.

As seen in Figures 1 and 2, seed board 1 is part of rotating body 2, and includes a plurality of seed holes 4 that "are formed in the seed board 1 at equal circumferential spacing," and shut roller 6 "closes the seed holes 4 from the inside at a predetermined position." *Id.* at 3:12–22.

Yamahata discloses that "some seeds get stuck in the seed holes and do not drop from the seed holes even when the suction is stopped by the shut roller." *Id.* at 2:35–37. Thus, Yamahata uses guide 10 having guide surface 17 "intersecting the trajectory of the seed holes 4," so that "the seed 16 is guided along the guide surface 17 of the guide 10 and is removed from the

seed hole 4." *Id.* at 3:34–35, 4:11–13. In this way, if a seed is stuck in seed hole 4 and "does not fall from the seed hole 4 even after the suctioning force has been lost in the seed hole 4 due to the shut roller 6, the guide 10 forcibly removes the seed from the seed hole 4," so that "all seeds 16 drop from the seed board 1 at a predetermined position as indicated by arrow B, and the sowing interval at which each seed drops is regular." *Id.* at 4:13–20.

C. Claim 1

1. Overview of the Parties' Contentions

Petitioner contends that the combination of Hedderwick, Koning, and Yamahata together teaches every limitation in claim 1 and that an ordinarily skilled artisan would have been motivated to combine the references to yield the claimed invention. *See* Pet. 36–45, 57–80. To briefly summarize the manner in which Petitioner relies on the cited references, Petitioner contends that Hedderwick teaches the preamble and limitations [a] and [b]. *See id.* at 57–63. As to limitation [c], Petitioner proposes modifying Hedderwick by replacing finned belt 134 with Koning's brush belt, and contends that Hedderwick so modified teaches a "delivery system" as recited in limitation [c]. *See id.* at 64–74.[8] Petitioner contends that Yamahata's seed guide corresponds to the "blocking loading surface" recited in limitation [d], and that when Yamahata's seed guide is incorporated into Hedderwick and Koning, the resulting combination teaches every aspect of limitation [d]. *See id.* at 74–80.

[8] We note that the claim does not expressly recite a brush belt, and we do not hold that a "delivery system" requires a brush belt. However, as discussed in greater detail below (*see infra* pp. 23-25), the sole challenge as Petitioner framed it includes Koning's brush belt, so that is the challenge we must evaluate.

The Petition includes the following modified version of Hedderwick's Figure 4 to illustrate how Petitioner proposes to combine Hedderwick, Koning, and Yamahata:

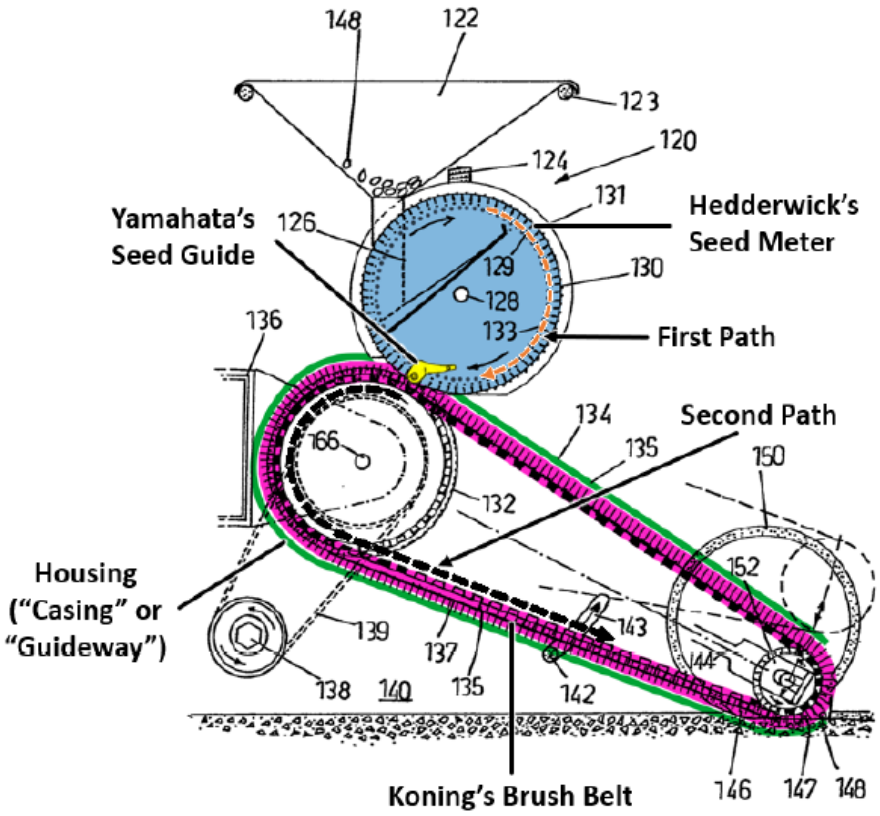

Pet. 80. In Petitioner's drawing, Yamahata's seed guide (colorized yellow) is added adjacent Hedderwick's seed meter disc (colorized blue), and Koning's brush belt (colorized purple) is substituted for Hedderwick's finned belt. *Id.* at 78–80.

According to Petitioner, ordinarily skilled artisans would have been motivated to replace Hedderwick's finned belt with Koning's brush belt, in order to improve the accuracy of seed spacing. *See id.* at 42–43. Specifically, Petitioner argues that in Hedderwick, seeds can move within the cells of the finned belt, which means that Hedderwick's endless belt does not completely define the relationship between seeds. *Id.* at 41. According to Petitioner, an ordinarily skilled artisan "desiring finer seed spacing would

have been motivated to combine the teachings of Koning's brush belt with Hedderwick's system to deliver seeds the same distance apart and with a consistent velocity to achieve accurate seed spacing." *Id.* at 43. As for Yamahata, Petitioner argues that Yamahata identifies a problem that seed can become stuck in the holes of a seed meter disk, and teaches to solve that problem by using a seed guide to block movement of the seeds on the path of the rotating disk. *Id.* at 38–39 (citing Ex. 1011, 2:34–37, 4:13–22). Petitioner contends that an ordinarily skilled artisan would have been motivated to incorporate Yamahata's seed guide into Hedderwick, to improve control over seed released from Hedderwick's seed meter disc, and improve seed spacing. *Id.* at 39, 78; Ex. 1002 ¶ 74.

Patent Owner counters that Koning does not qualify as analogous art and, relatedly, that judicial estoppel bars Petitioner from contending otherwise. PO Resp. 9–19; Sur-Reply 13–14. Patent Owner further argues that an ordinarily skilled artisan would not have been motivated to combine Koning's belt with Hedderwick and Yamahata, and would not have expected that combination to succeed. PO Resp. 19–35; Sur-Reply 16–21. Patent Owner also challenges the motivation and reasonable expectation of success for the incorporation of Yamahata's seed guide. PO Resp. 35–50; Sur-Reply 21–28. And Patent Owner argues that incorporating Yamahata's seed guide would not yield a "blocking loading surface" as claimed. PO Resp. 51–60; Sur-Reply 28–29. Patent Owner also submits evidence of objective indicia of nonobviousness. PO Resp. 60–97; Sur-Reply 4–13.

2. Motivation to Combine and Reasonable Expectation of Success

Of the many disputed issues summarized in the preceding section, our analysis focuses on whether an ordinarily skilled artisan would have been motivated to combine the references in the manner Petitioner proposes and

would have reasonably expected success in doing so. Because those issues are dispositive of Petitioner's challenge, it is unnecessary for us to resolve the other disputed issues. *See, e.g., Adidas AG v. Nike, Inc.*, 963 F.3d 1355, 1359 (Fed. Cir. 2020) (affirming Board's determination that claims were not shown to be obvious because the petitioner had not demonstrated that an ordinarily skilled artisan would have been motivated to combine the references); *Samsung Electronics Co. v. Elm 3DS Innovations, LLC*, 925 F.3d 1373, 1383 (Fed. Cir. 2019) (determining that it unnecessary to reach other issues when reasonable expectation of success is dispositive).

We note at the outset of this analysis that Petitioner chose a peculiar, and seemingly unnecessarily complex manner of combining the references to yield the limitations of the claim. Specifically, as we remarked in our Decision on Institution, it is unclear that Koning is necessary, insofar as Hedderwick may disclose the "delivery system" of limitation [c] without finned belt 134 being replaced by Koning's brush belt. *See* Dec. on Inst. 20–21. However, Petitioner did not present a challenge based on Hedderwick and Yamahata, without Koning. Although the Petition included a footnote stating that if the "delivery system" does not require a brush belt and encompasses flighted belts, the claims "are still unpatentable in view of Hedderwick and Yamahata, either with or without Koning's brush belt," (*see* Pet. 65 n.12), the Petition never elaborated on a combination that did not include Koning's brush belt, and the sole ground set forth in the Petition was unpatentability "over Hedderwick in view of Yamahata and Koning." *See id.* at 12, 57. Patent Owner argues, persuasively, that Koning is a necessary part of the challenge that the Petition presented. PO Resp. 7–8; Sur-Reply 29. Petitioner does not contest that point in its Reply — indeed, most of the Reply is focused on the obviousness of incorporating Koning's brush belt

into Hedderwick. *See* Pet. Reply 4–27. At the hearing, Petitioner acknowledged Koning's essential role in its asserted ground of unpatentability in view of "the fact that Koning is used as one of the references in each of the combinations[9] we propose." Tr. 42:8–15, *see id.* at 13:4–14.

Because the proposed combination as Petitioner chose to frame it includes seeds being deposited from above into Koning's "delivery system," which is a moving brush belt, it is incumbent on Petitioner to show that an ordinarily skilled artisan would have been motivated to combine the references in that proposed manner and would have reasonably expected success in doing so. *See Adidas*, 963 F.3d at 1359–60; *Samsung*, 925 F.3d at 1382–83. The Federal Circuit has made clear that a satisfactory explanation of "*how* the combination of the . . . references [is] supposed to work" is necessary to support "a conclusion that a relevant skilled artisan would have been motivated to make the combination and reasonably expect success in doing so." *Personal Web Techs., LLC v. Apple, Inc.*, 848 F.3d 987, 994 (Fed. Cir. 2017) (emphasis in original).

Further, "the petitioner's petition . . . is supposed to guide the life of the litigation," *SAS Inst., Inc. v. Iancu*, 138 S.Ct. 1348, 1356 (2018), and it would "not be proper for the Board to deviate from the grounds in the petition and raise its own obviousness theory." *Sirona Dental Sys. v. Institut Straumann AG*, 892 F.3d 1349, 1356 (Fed. Cir. 2018). The Federal Circuit recently held the Board erred when it instituted inter partes review based on a combination of prior art references not advanced in a petition because "the

[9] There is only one combination at issue in this proceeding, but the hearing was a combined hearing for this and several other related cases. *See* Paper 67, 2.

Board does not 'enjoy[] a license to depart from the petition and institute a *different* inter partes review of [its] own design." *Koninklijke Philips N.V. v. Google LLC*, 948 F.3d 1330, 1336 (Fed. Cir. 2020) (quoting *SAS*, 138 S.Ct. at 1356). These precedents make clear that "the petitioner's contentions, not the Director's discretion, define the scope of the litigation all the way from institution through to conclusion." *SAS*, 138 S.Ct. at 1357; *see also id.* at 1355 ("Congress chose to structure a process in which it's the petitioner, not the Director, who gets to define the contours of the proceeding."). In accordance with this framework, we look to the Petitioner's explanation of how the proposed combination of Hedderwick, Koning, and Yamahata would work in assessing motivation and reasonable expectation of success.

Here, in summary and as further detailed below, we are not persuaded that Petitioner has met its burden of showing, by a preponderance of the evidence, that ordinarily skilled artisans would have been motivated to selectively glean Koning's belt 44 with brush hairs 45 from Koning's "delivery system," which also includes conveying member 23 and then reorient the belt 44 so that the brush hairs receive the seeds from Yamahata's seed guide in the proposed manner, and would have reasonably expected success in doing so. In Petitioner's proposed combination, Yamahata's seed guide is positioned "immediately above, or proximate to, Hedderwick's intake opening (orifice 141), so that the guide blocks seeds on Hedderwick's seed meter disk and permits the seeds to be redirected into Koning's brush belt through Hedderwick's intake opening." Pet. 78–79. From there, Koning's brush belt "hold[s] seeds and move[s] them along a second path (around Hedderwick's driven and idler sprockets) to the discharge position (Hedderwick's discharge opening)." *Id.* at 79.

As Patent Owner points out, the function that the brush belt serves in Petitioner's proposed combination is different from its function in Koning. *See* PO Resp. 21–22. In Koning, the brush belt holds potatoes "lying on the conveying surface" so as to maintain the speed and relative position of potatoes as they are moved by the conveyor to the furrow. Ex. 1004, 3:16–24, 5:3–14, Fig. 4; *see also* Pet. 42 (quoting same portions of Koning's disclosure). Koning does not teach a system in which seeds are dropped from above into a moving brush belt. And Petitioner does not present persuasive evidence that an ordinarily skilled artisan would have been motivated to adapt Koning's brush belt to such a use, or would have reasonably expected success in doing so.

Petitioner argues, with citation to its expert, Mr. Prairie, that "[i]ncorporating the teachings of Koning's brush belt into Hedderwick's row unit would have been simple for a POSITA to implement and would only have required applying a known technique (brush belt) to a known device (seeding system)." Pet. 43 (citing Ex. 1002 ¶ 81); *see also* Ex. 1135 ¶ 53 (Mr. Prairie testifying in Reply declaration that "[a] person of ordinary skill in the art would have known how to fine tune the brush belt taught by Koning to work in Hedderwick's system."). Petitioner and Mr. Prairie assert that Koning shows the brush belt receiving seeds as its bristles are rotating around upper roller 42, such that an ordinarily skilled artisan would have understood to incorporate Koning's brush belt into Hedderwick so that that it receives seeds as the belt curves around Hedderwick's driven sprocket 132. *Id.* at 43–44 n.8; Ex. 1002 ¶ 81.

Petitioner's and Mr. Prairie's analysis does not acknowledge, much less bridge, the gap between Koning's use of a brush belt to hold potatoes from above as they lie on a conveying surface, versus the brush belt's use in

the proposed combination to receive seeds that are deposited onto it from above.[10] During his deposition, Mr. Prairie resisted agreeing that the potatoes are lying on the conveyor in Koning, testifying that he takes from Koning's description that "they are captured within the belt with brush hairs. And that there is some weight that's along the conveying member 23." Ex. 2193, 96:24–99:25. Mr. Prairie testified that he "do[es]n't believe the brush hairs support the full weight of the potatoes," but that Koning did not provide him sufficient information to answer whether the conveying member supports the majority of the weight of the potatoes. *Id.* at 106:22–107:21. In our view, it is clear from Koning's description that the potatoes lie on the conveyor and the purpose of the brush belt is to maintain their position relative to each other while they are moved by the conveyor. Ex. 1004, 3:16–24, 5:3–14, Fig. 4; *see also* Ex. 2205 ¶¶ 140–141 (Patent Owner's expert, Dr. Glancey, testifying that a simple mechanical analysis shows that in Koning, about 87% of the potatoes' weight is supported by the conveying member). Mr. Prairie's refusal to acknowledge the differences between the brush belt's function in Koning versus the proposed combination undermines the credibility of his testimony that the proposed combination would have been a simple application of a known technique to a known device.

---

[10] *See WBIP, LLC v. Kohler Co.*, 829 F.3d 1317, 1327 (Fed. Cir. 2016) (noting expert testimony that supported the absence of a motivation to combine: "[I]f I can equate this one to kind of a simple analogy, if you're trying to build a piece of furniture. What's a typical thing? You put on a piece of wood. You take a nail, and you hit the nail with a hammer. In control terms, what Mr. Phipps is suggesting is that you put the hammer on the workbench, pick up the piece of furniture and bash the piece of furniture onto the hammer. It's totally backwards from what I believe one of skill in the art would even attempt . . . .").

The persuasiveness of Mr. Prairie's testimony—i.e., that it would have been simple for an ordinarily skilled artisan to adapt Koning's brush belt for use in the proposed combination, where seeds are deposited onto the brush belt from above—is further undermined by his testimony that he "can't recall a time where I've seen a seed being dropped into a brush belt." Ex. 2193, 113:5–9; *see also* Ex. 2263, 81:2–12 ("Q. And you never attempted to drop a seed onto a moving brush belt to see whether that would be inserted into the brush belt, correct? A. As I stated, for the purposes of this case, I did not do any physical experimentation with a moving brush belt as I didn't feel it was necessary. The prior art discloses sufficient information.") (objection omitted). Mr. Prairie has "had some industrial design projects where we've had to utilize brushes for various applications," but he "ha[s] not used a brush belt to convey seed." Ex. 2194, 297:6–16. Mr. Prairie testified that "prior to writing this declaration, brush belt technology was not a specific area that I study, that I was researching." Ex. 2263, 79:6–9. Indeed, during his initial deposition in this case, the only specific example of a moving brush belt Mr. Prairie could recall seeing was Patent Owner's ExactEmerge product. Ex. 2193, 108:6–110:10.

The basis for Mr. Prairie's opinion, that a seed would be expected to enter a moving brush belt in the proposed combination, appears to only be Koning itself. Ex. 1002 ¶¶ 79–81; Ex. 2193, 116:12–19, 118:7–23; Ex. 2263, 159:5–160:2. When asked at his deposition, Mr. Prairie did not explain any other engineering analysis he performed to make that determination. Ex. 2193, 114:23–117:12. Mr. Prairie testified that he "did not operate a brush belt for this declaration because [he] didn't feel it was necessary to make my assessments" and he "did not do study or experimentation on a brush belt as I did not feel it was necessary."

Ex. 2263, 79:17–19, 80:2–4. Mr. Prairie's reliance on Koning is unpersuasive because, as discussed above, Koning does not teach using a brush belt to receive and convey seeds that have been dropped onto it from above. Mr. Prairie does not account for that difference by explaining why an ordinarily skilled artisan would expect Koning's brush belt to effectively capture and carry seeds dropped from above, as in the proposed combination.

In its Reply, Petitioner argues that "brush belts were well-known and used in many aspects of planting, so a POSITA would have had the knowledge necessary to make a brush belt work in Hedderwick's system without undue experimentation." Pet. Reply 8. To support this argument, Petitioner cites Koning and two other references: Thiemke[11] and Gould.[12] *See id.* at 9–11. In his declaration accompanying Petitioner's Reply, Mr. Prairie discusses those same references. *See* Ex. 1135 ¶¶ 40–43. But these two additional references do little to aid Petitioner's case because neither Thiemke nor Gould discloses a moving brush belt that captures seeds dropped directly into it from above, as Petitioner proposes in its combination. Figures 3 and 4 of Thiemke are reproduced below:

[11] US 6,651,570 B1, issued Nov. 25, 2003 (Ex. 1015).
[12] US 1,376,933, issued May 3, 1921 (Ex. 1030).

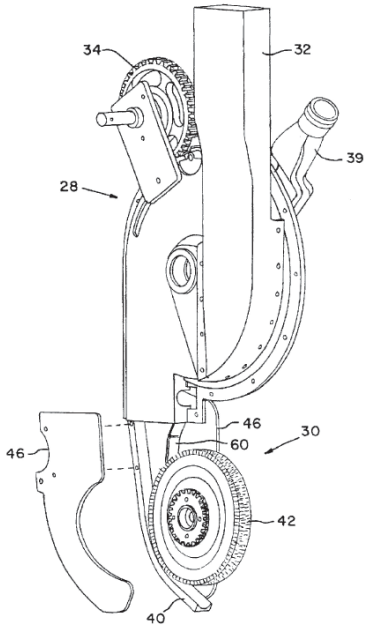

Fig. 3

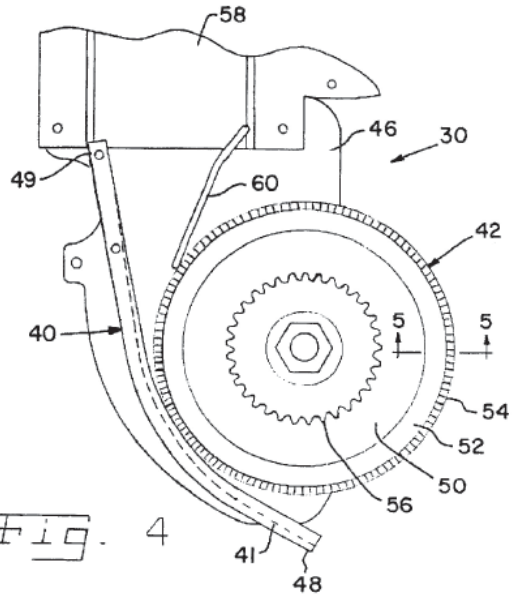

Fig. 4

Figures 3 and 4 are perspective and side views, respectively, of a seed placement system. Ex. 1015, 3:5–9.

Thiemke explains that seeds discharged from seed metering system 28 are guided by deflector 60 into a nip area between wheel 42 and seed slide 40. *Id.* at 5:47–54. Thiemke teaches that a "gap of approximately one millimeter between the circumferential periphery of wheel 42 and seed slide 40 ensures that the seed is gripped by gripping outside layer 54," which can be formed of nylon bristles. *Id.* at 5:54–57, 5:1–10. Thiemke does not teach loading seed into a bristle brush by dropping it from directly above; indeed, deflector 60 prevents seed from dropping onto the top of wheel 42 in a manner that would be comparable to how Petitioner proposes to load seed into Koning's brush belt in the proposed combination.

Gould describes a machine "for taking an individual plant from a quantity, depositing it positively in the ground and properly covering it, and operating with great rapidity." Ex. 1030, 1:25–30. Figure 4 of Gould is reproduced below:

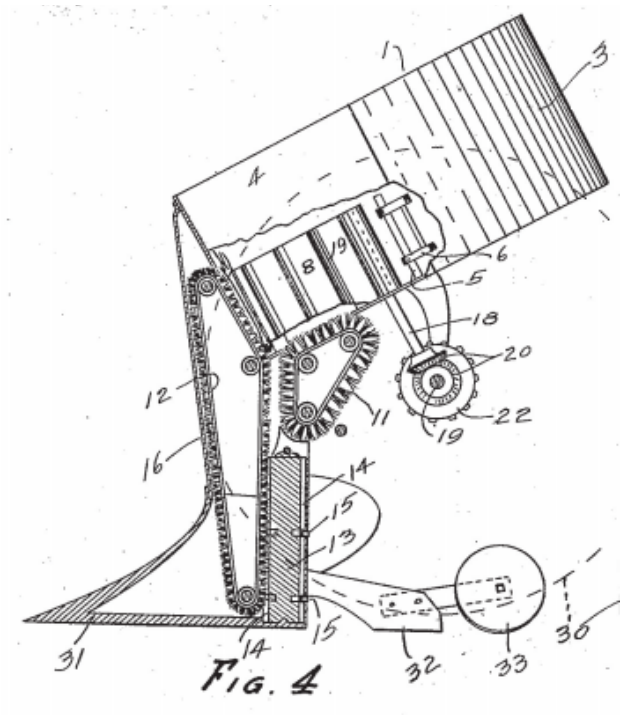

Figure 4 shows a sectional side elevation view of Gould's plant-setting machine. *Id.* at 1:38.

Gould explains that brush belt 11 operates beneath hopper 1 and "travels vertically downward . . . and cooperates with a second brush belt 12 to move the plant from the hopper." *Id.* at 1:75–82. In considering Gould's teaching of two vertically oriented and opposed brush belts that cooperate to move plants from a hopper, we see little relevance to Petitioner's proposal to load seeds into a brush belt by depositing them from directly above.

To summarize the analysis to this point, Petitioner's proposed combination uses Koning's brush belt in a way that materially differs from the way Koning uses its brush belt. Petitioner and Mr. Prairie contend that it would have been a simple matter for an ordinarily skilled artisan to apply Koning's brush belt as proposed, but Mr. Prairie has never seen a brush belt used that way and has never attempted to do it. Mr. Prairie's basis for his testimony, that using a brush belt as proposed would have been within the level of ordinary skill in the art, is his review of the prior art, but Petitioner

provides no prior art reference that shows loading a brush belt by simply depositing seed onto it from above. In our view, Petitioner's showing that an ordinarily skilled artisan would have been motivated to use Koning's brush belt in the proposed manner, and would have reasonably expected success in doing so, is conjectural and unpersuasive.

Compounding the shortcomings in Petitioner's affirmative showing, Patent Owner further undermines Petitioner's case with its evidence of the difficulties that ordinarily skilled artisans would have expected to face in attempting to drop seeds into a moving brush belt. *See* PO Resp. 28–35; Sur-Reply 18–20. Patent Owner's expert, Dr. Glancey, testifies that an ordinarily skilled artisan "would have been discouraged from attempting to combine Koning's belt with brush hairs with Hedderwick due to the significant real-world engineering challenges that would prevent or frustrate such a modification." Ex. 2205 ¶ 164. In particular, Dr. Glancey explains that in a brush belt moving at a conventional speed, the brush tips "resemble a fluid medium with surface tension properties," which "mak[es] it more difficult to insert an object into the moving brush hairs." *Id.* ¶ 166. According to Dr. Glancey, this surface tension in the brush hairs resists engagement of seeds into moving bristles and causes seeds to "float" or "surf" on the brush hair tips, which create spacing and timing problems that would have discouraged using a brush belt in the manner Petitioner proposes. *Id.* ¶¶ 167–168. Dr. Glancey cites video of seeds being dropped onto moving brush belts that exhibit this effect. *Id.* ¶ 167 (citing Ex. 2186; Ex. 2187; Ex. 2141). Dr. Glancey further testifies that ordinarily skilled artisans attempting to insert seed into a moving brush belt would have been likely to encounter seed jamming problems when the seed fails to embed itself in the brush hairs and causes a pile-up effect that disrupts loading of

subsequent seeds. *Id.* ¶¶ 170–172 (citing Ex. 2143; Ex. 2198). Dr. Glancey also testifies that brush belts' susceptibility to environmental damage would have discouraged their use in Petitioner's proposed combination. *Id.* ¶¶ 173–176.

Petitioner and Mr. Prairie criticize Dr. Glancey's videos as "not a reliable indication of how Koning's brush belt would operate in Hedderwick's system." Pet. Reply 12–13; *see* Ex. 1135 ¶ 50 (Mr. Prairie testifying that "Deere's 'experiments' are not scientifically reliable"). Petitioner points out that in his deposition, Dr. Glancey was unable to provide certain information about the creation of the videos or the characteristics of the brush belt in the videos. Pet. Reply 12–13 (citing Ex. 1114, 136:6–143:12, 147:7–155:17); *see also* Ex. 1135 ¶¶ 48–50 (Mr. Prairie making same points). These criticisms undercut the videos' value as experimental evidence of how a brush belt would behave in circumstances that replicate the proposed combination, but the videos still serve as real-world illustrations of Dr. Glancey's testimony regarding the kinds of phenomena that ordinarily skilled artisan would encounter when seeking to load seed in a moving bristle brush. Aside from attacking Dr. Glancey's videos, Petitioner and Mr. Prairie do not address Dr. Glancey's broader point that brush belts can suffer from seed surfing, jamming, and degradation issues, and that these considerations would dissuade an ordinarily skilled artisan from the proposed combination.

Moreover, while Petitioner and Mr. Prairie are critical of Dr. Glancey's videos as demonstrations of how the proposed combination would work, Petitioner did not present, and Mr. Prairie did not conduct, any experiments or other kinds of physical demonstrations of their own. *See* Ex. 2263, 79:17–19, 80:2–4, 81:2–12. Mr. Prairie testifies:

> The fact that Deere apparently had to create new "experiments" for these proceedings rather than rely on existing evidence or research, in my opinion, also undermines its reliability. If it would have been clear to a person of ordinary skill in the art that brush belts could not be used with seed, . . . then Deere should have presented evidence—patents, articles, studies, papers, or videos—from the prior art to show this.

Ex. 1135 ¶ 51. Yet it is Petitioner's burden to show motivation and reasonable expectation of success for the proposed combination, not Patent Owner's burden to show that the prior art demonstrates the futility of the proposed combination. *See* 35 U.S.C. § 316(e); *In re Magnum Oil Tools Int'l, Ltd.*, 829 F.3d 1364, 1376 (Fed. Cir. 2016). Here, Petitioner's affirmative showing on motivation and reasonable expectation of success for using Koning's brush belt in the proposed combination is unpersuasive for the reasons discussed above. And Patent Owner's evidence of difficulties an ordinarily skilled artisan would have expected to encounter in that proposal serves to highlight the issues that Petitioner's showing ignores.

Petitioner additionally contends that Patent Owner's arguments are based on the erroneous premise that an ordinarily skilled artisan must be able to physically combine the references. *See* Pet. Reply 7 (citing *In re Mouttet*, 686 F.3d 1322, 1332–33 (Fed. Cir. 2012)). We disagree. Patent Owner's arguments, summarized above, simply point out that an ordinarily skilled artisan would not have expected success in combining the references' teachings in the way Petitioner proposes. Motivation to combine and reasonable expectation of success are properly assessed with reference to the combination as Petitioner has framed it. The Federal Circuit has explained that doing so is not inconsistent with *Mouttet*. *See Samsung*, 925 F.3d at 1382–83 ("We will not fault the Board for analyzing Petitioners' obviousness grounds in the way presented in the Petition.").

Petitioner also argues in its Reply that the '199 patent does not "address the purported difficulties of using a brush belt or provide any explanation of how overcome such problems (e.g., bristle stiffness or density)." Pet. Reply 7. We agree that the '199 patent is generic in its description of the brush belt's characteristics. *See* Ex. 1001, 7:36–42 (describing that "brush bristles are the preferred embodiment, and may be natural or synthetic" but other material types can also be used); *id.* at 4:51 ("The belt shown in FIG. 3 has relatively long bristles."); *id.* at 4:66–67 ("However, a short bristle brush can be used as well."). But, critically, the '199 patent explains that a seed can be inserted into a moving brush belt by using the outer surface of a loading wheel to pinch seeds off the seed disk into the bristles of the brush belt. Ex. 1001, 4:21–28, Fig. 3; *see* Ex. 2205 ¶ 43. Petitioner does not point to any prior art that teaches such a solution.

Petitioner relies on Yamahata's seed guide to disclose the claimed blocking loading surface. Pet. 74–80; Pet. Reply 27–30. We agree with Patent Owner that Petitioner has not shown that an ordinarily skilled artisan would have been motivated to use Yamahata's seed guide as Petitioner proposes to load seed in a moving brush belt, and would have reasonably expected success in doing so. PO Resp. 51; Sur-Reply 26–27. Yamahata explains that the function of its seed guide is to "forcibly remove[] the seed from the seed hole" on the vacuum seeder so that "all seeds drop . . . at a predetermined position . . . and the sowing interval at which each seed drops is regular." Ex. 1011, 4:16–20. Pointing to this teaching of reliable seed release, Petitioner's stated motivation for incorporating Yamahata's seed guide into the proposed combination is to increase control over seed movement. Pet. 39. But Yamahata's teaching that the seed guide scrapes off seeds stuck in vacuum holes does not support that an ordinarily skilled

artisan would expect the seed guide to successfully load seed into a moving brush belt, as in Petitioner's proposed combination. Yamahata does not involve a brush belt, and Yamahata's seed guide is intended to ensure that "all seeds 16 drop . . . at a predetermined position." Ex. 1011, 4:17–19. For all the reasons discussed above, Petitioner has not shown that an ordinarily skilled artisan would expect success from a system in which a seed is simply dropped from above onto a moving brush belt. And Petitioner does not persuasively explain why an ordinarily skilled artisan would have been motivated to, and would have reasonably expected success in, using Yamahata's seed guide to load seed into a brush belt.

3. Conclusion Regarding Claim 1

We conclude that Petitioner has not demonstrated by a preponderance of the evidence that claim 1 would have been obvious over Hedderwick, Koning, and Yamahata.

D. Claim 3

Claim 3 depends from claim 1 and adds the further limitation that "the metering member is configured to use a pressure differential to retain individual seeds on the metering member." Ex. 1001, 8:17–19. Petitioner's arguments regarding claim 3 do not remedy the shortcomings discussed above with respect to claim 1. *See* Pet. 81; *see also Mylan Pharms. Inc. v. Research Corp. Techs., Inc.*, 914 F.3d 1366, 1376 (Fed. Cir. 2019) ("Dependent claims, with added limitations, are generally not obvious when their parent claims are not.") (citing *W.L. Gore & Assocs., Inc., v. Garlock, Inc.*, 721 F.2d 1540, 1555 (Fed. Cir. 1983)). Thus, we conclude that Petitioner has not shown by a preponderance of the evidence that claim 3 would have been obvious over Hedderwick, Koning, and Yamahata.

VI. CONSTITUTIONAL CHALLENGE

In a single sentence, Patent Owner states it "challenges the constitutionality of, and the panel's authority to adjudicate, this proceeding under *Arthrex, Inc. v. Smith & Nephew Inc.*, 941 F.3d 1320 (Fed. Cir. 2019)." P.O. Resp. 97.[13] No additional argument or explanation of Patent Owner's challenge is presented.

This constitutional issue has been addressed by the Federal Circuit's decision in *Arthrex*, 941 F.3d at 1337 ("This as-applied severance . . . cures the constitutional violation."); *see also Arthrex, Inc. v. Smith & Nephew, Inc.*, 953 F.3d 760, 764 (Fed. Cir. 2020) (Moore, J., concurring in denial of rehearing) ("Because the APJs were constitutionally appointed as of the implementation of the severance, inter partes review decisions going forward were no longer rendered by unconstitutional panels."). Accordingly, we do not consider this issue any further for this Decision.

VII. CONCLUSION

The outcome for the challenged claims in this proceeding is set forth below. In summary:

Claims	35 U.S.C. §	References	Claims Shown Unpatentable	Claims Not Shown Unpatentable
1, 3	103	Hedderwick, Koning, Yamahata		1, 3

[13] We note that the Supreme Court has accepted this case for review. *Arthrex, Inc. v. Smith & Nephew, Inc.*, 941 F.3d 1320 (Fed. Cir. 2019), *cert. granted sub nom. United States v. Arthrex, Inc.*, 2020 WL 6037206 (Oct. 13, 2020).

VIII. ORDER

In consideration of the foregoing, it is hereby:

ORDERED that claims 1 and 3 have not been proven by a preponderance of the evidence to be unpatentable;

FURTHER ORDERED that Petitioner's Motion to Exclude is denied in part and dismissed in part;

FURTHER ORDERED that Patent Owner's Motion to Exclude is dismissed; and

FURTHER ORDERED that, because this is a final written decision, parties to this proceeding seeking judicial review of our Decision must comply with the notice and service requirements of 37 C.F.R. § 90.2.

FOR PETITIONER:

Grant Rowan
Mary Sooter
R. Gregory Israelsen
WILMER, CUTLER, PICKERING, HALE AND DORR, LLP
grant.rowan@wilmerhale.com
mindy.sooter@wilmerhale.com
greg.israelsen@wilmerhale.com

FOR PATENT OWNER:

Jay Alexander
Peter Chen
Nicholas L. Evoy
Rajesh Paul
Richard Rainey
COVINGTON & BURLING LLP
jalexander@cov.com
pchen@cov.com
nevoy@cov.com
rpaul@cov.com
rrainey@cov.com