Trials@uspto.gov
571-272-7822

Paper 99
Date: December 2, 2020

UNITED STATES PATENT AND TRADEMARK OFFICE

BEFORE THE PATENT TRIAL AND APPEAL BOARD

PRECISION PLANTING LLC, AGCO CORPORATION,
Petitioner,

v.

DEERE & COMPANY,
Patent Owner.

IPR2019-01048
Patent 9,686,906 B2

Before MICHAEL W. KIM, *Vice Chief Administrative Patent Judge*, BARRY L. GROSSMAN, and TIMOTHY J. GOODSON, *Administrative Patent Judges.*

GROSSMAN, *Administrative Patent Judge*.

JUDGMENT
Final Written Decision
Determining No Challenged Claims Unpatentable
Dismissing Petitioner's Motion to Exclude
Dismissing Patent Owner's Motion to Exclude
35 U.S.C. § 318(a)

I. INTRODUCTION

A. Background and Summary

Precision Planting LLC and AGCO Corporation ("Petitioner") filed a Petition requesting an *inter partes* review of claims 1–20 of U.S. Patent No. 9,686,906 (Ex. 1001, "the '906 patent"). Paper 4 ("Pet."). Deere & Company ("Patent Owner") filed a Preliminary Response. Paper 9 ("Prelim. Resp."). After receiving our authorization to do so, Petitioner filed a Reply (Paper 11) and Patent Owner filed a Sur-Reply (Paper 12).

We concluded that Petitioner satisfied the burden, under 35 U.S.C. § 314(a), to show that there was a reasonable likelihood that Petitioner would prevail with respect to at least one of the challenged claims. Accordingly, on behalf of the Director (37 C.F.R. § 42.4(a)), and in accordance with *SAS Inst., Inc. v. Iancu*, 138 S. Ct. 1348, 1353 (2018), we instituted an *inter partes* review of all the challenged claims, on all the asserted grounds. Paper 17 ("Dec. Inst.").

Patent Owner filed a Response. Paper 35 (PO Resp.). Petitioner filed a Reply. Paper 58 (Confidential), 59 (Redacted) ("Reply"). Patent Owner filed a Sur-reply. Paper 70 ("Sur-reply").

Petitioner submitted 89 exhibits. *See* Exs. 1001–1148 (not consecutive; some exhibit numbers not used); *see also* Ex. 1148, a Joint Exhibit Index concordance of exhibits in this proceeding and the related post-grant proceedings). Petitioner relies, in part, on the Declaration testimony of Dr. Randal K. Taylor.[1] *See* Ex. 1002.

---

[1] Dr. Taylor earned B.S., M.S., and Ph.D. degrees in Agricultural Engineering. Ex. 1002 ¶ 2. He also has approximately thirty years of experience in Agricultural Engineer, and is a Fellow in the American Society of Agricultural and Biological Engineers ("ASABE"). *Id.* ¶¶ 3–9.

Patent Owner submitted 200 exhibits. *See* Exs. 2001–2272 (not consecutive; some exhibit numbers not used)). Patent Owner relies, in part, on the Declaration testimony of Dr. James L. Glancey.[2] *See* Ex. 2206.

Petitioner filed a Motion to Exclude evidence submitted by Patent Owner. Paper 74 ("Pet. Mot. Excl."). Patent Owner filed a Response to the Motion to Exclude. Paper 85 ("PO Resp. Mot. Excl."). Petitioner filed a Reply. Paper 90 ("Pet. Reply Mot. Excl.").

Patent Owner filed a Motion to Exclude evidence submitted by Petitioner. Paper 77 ("PO Mot. Excl."). Petitioner filed a Response to the Motion to Exclude. Paper 81 ("Pet. Resp. Mot. Excl."). Patent Owner filed a Reply. Paper 93 ("PO Reply Mot. Excl.").

A hearing was held August 31, 2020. Paper 96 ("Tr."). This was a joint hearing that also included related cases IPR2019-01044; 01046; 01051; 01053; and 01055.

We have jurisdiction under 35 U.S.C. § 6. We enter this Final Written Decision pursuant to 35 U.S.C. § 318(a) and 37 C.F.R. § 42.73.

He is a named inventor on two U.S. patents. *Id.* ¶ 9. Dr. Taylor is a Distinguished Professor in the Department of Biosystems and Agricultural Engineering at Oklahoma State University. *Id.*, Exhibit A.

[2] Dr. Glancey earned degrees in Agricultural and Biological Engineering, culminating in a Doctor of Philosophy in Engineering with an emphasis in Mechanical Engineering and concentrations in Civil Engineering, Agricultural and Biological Engineering, and Applied Mathematics. Ex. 2206 ¶ 3. Currently, he holds a dual appointment at the University of Delaware as a Professor of Machine Design and Development in Mechanical Engineering and a Professor in the College of Agriculture and Natural Resources. *Id.* ¶ 4. He is an inventor on one U.S. patent related to harvesting, and three U.S. patents related to the composite material manufacturing and automation. *Id.* at ¶ 6. Dr. Glancey is a Registered Professional Engineer in Delaware. *Id.* ¶ 11.

Petitioner has the burden of proving unpatentability of a claim by a preponderance of the evidence. 35 U.S.C. § 316(e).

Based on the findings and conclusions below, we determine that Petitioner has *not* proven that claims 1–20 are unpatentable.

We dismiss as moot both Petitioner's Motion to Exclude Evidence and Patent Owner's Motion to Exclude Evidence.

B. Real Parties in Interest

Petitioner identifies Precision Planting, LLC and AGCO Corp. as the real parties-in-interest. Pet. 6. Petitioner also states that "[f]or the purposes of completeness," Petitioner also names Monsanto Co. and Bayer AG as real parties-in-interest. *Id.*

Patent Owner identifies itself, Deere & Company, as the sole real party-in-interest. Paper 6, 1.

C. Related Matters

Patent Owner sued Petitioner for infringement of the '906 patent. *See* Pet. 7; Paper 6, 1 (citing *Deere & Company v. AGCO Corporation*, Civil Action No. 1:18-cv-00827-CFC (District of Delaware June 1, 2018) (the "827 case"); *Deere & Company v. Precision Planting LLC*, Civil Action No. 1:18-cv-00828-CFC (District of Delaware June 1, 2018) (the "828 case")).[3]

---

[3] *See* Ex. 3003 (District Court's docket entry for January 9, 2019, of an "ORAL ORDER" stating that the 827 and 828 cases are "consolidated," with the 827 case as "the lead case and all future filings shall be made in that case only." Accordingly, the 827 case now includes both of the entities that this Decision refers to collectively as Petitioner. For simplicity, this Decision refers to the now consolidated 827 and 828 cases as the "Delaware Case." The Delaware Case was stayed pending the outcome of this 01048 IPR proceeding and the related *inter partes* review proceedings. Ex. 3004.

Petitioner also lists the following Board proceedings as related matters:

Case No.	Challenged Patent
IPR2019-01044	U.S. Patent No. 8,813,663
IPR2019-01046	U.S. Patent No. 9,480,199
IPR2019-01047	U.S. Patent No. 9,510,502
IPR2019-01050	U.S. Patent No. 9,807,922
IPR2019-01051	U.S. Patent No. 9,807,924
IPR2019-01052	U.S. Patent No. 9,820,429
IPR2019-01053	U.S. Patent No. 9,861,031
IPR2019-01054	U.S. Patent No. 10,004,173
IPR2019-01055	U.S. Patent No. 9,699,955

Pet. 7. The listed IPR proceedings involve the same parties as this 01048 IPR proceeding. The challenged patents in the list above also are involved in the Delaware Case. *E.g.*, *see* Exs. 3005, 3006.

D. The '906 Patent

According to the '906 patent, precise placement of seeds during planting is critical to producing maximum crop yield. Ex. 1003, 1:11–21. If the seeds are planted too close together, they tend to "choke off" one another; if they are planted too far apart, valuable farmland is wasted. *Id.* at 1:16–21; *see also* Ex. 2031 ¶ 16 ("If corn plants are spaced too close together, the plants compete for resources such as water and sunlight and neither produces acceptable quality ears. They are basically weeds. If corn plants are planted too far apart, you have lost the potential for a productive plant that yields acceptable ears.").

There is a balance between planting seeds quickly and spacing seeds precisely. Ex. 2031 ¶ 11; *see also* Ex. 1001, 1:65–67 ("The spacing variation is exacerbated by higher travel speeds through the field which amplifies the dynamic field conditions.").

The '906 patent relates generally to seeding machines called "planters" that are used by farmers to plant seeds efficiently and precisely in a field. Ex. 1001, 1:20–22. An illustration of a seed planter is shown below.

Illustration of a seed planter. *See* Ex. 2003 ¶ 34.[4]

[4] This illustration from the complaint in the Delaware Case is an image of a "90-foot-wide John Deere DB90 planter, which covers 36 rows with each pass." Ex. 2003 ¶ 34. We provide it as an illustration of the general type and scale of the planters disclosed in the '906 patent. We make no finding, however, that this particular planter is within the scope of the invention claimed in the '906 patent.

In a typical planter configuration, the planter is attached to a tractor, which pulls the planter across a field to be planted with seeds. Ex. 1002 ¶ 32.

An annotated figure from Dr. Taylor's Declaration testimony of the basic components of a typical seed planter is shown below. *See* Ex. 1002 ¶ 32.

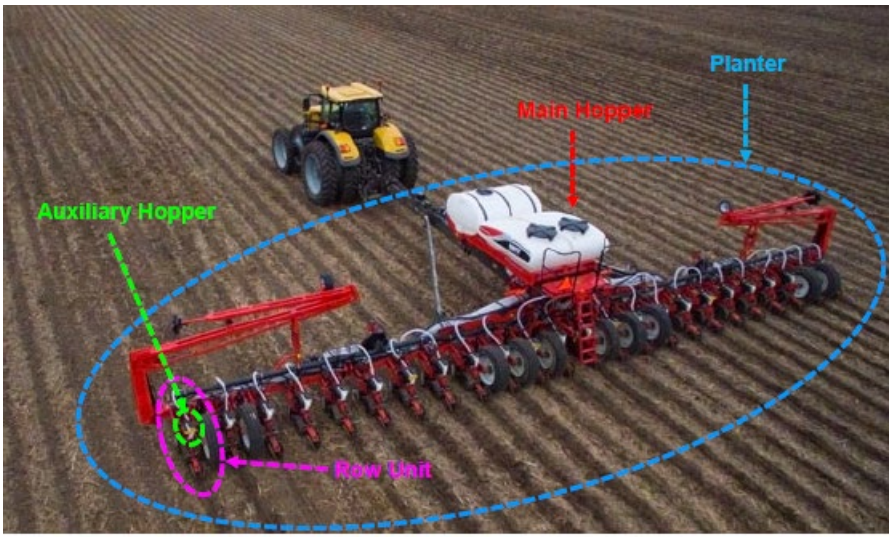

As shown above, a typical seed planter includes a main hopper, which transfers seeds to several "row units," each of which includes an auxiliary hopper and a seed delivery system that delivers, and plants, seeds into a trench or furrow in the ground. Ex. 1002 ¶ 32.

The most common seed delivery system used in row units is a "gravity drop system," in which seeds from the auxiliary hopper drop into a seed tube and fall by gravitational force into a seed trench. Ex. 1001, 1:52–58. One problem with this system is that the relative velocity difference between seed and soil causes individual seeds to bounce and tumble in somewhat random patterns as each seed enters the trench. Ex. 1001, 1:67–2:21. According to the Specification, the disclosed seed delivery system

provides a "controlled descent" of the seed to result in "a low or zero horizontal velocity" of the seed relative to the trench. *Id.* at 2:25–40.

As described in the '906 patent, planter or seeding machine 10 includes tool bar 12 as part of planter frame 14. Ex. 1001, 3:8–11. Mounted to the tool bar are multiple planting row units 16. One of these row units is shown in Figure 2.

Figure 2, reproduced below, is a side view of one row unit 16. Ex. 1001, 2:46–47.

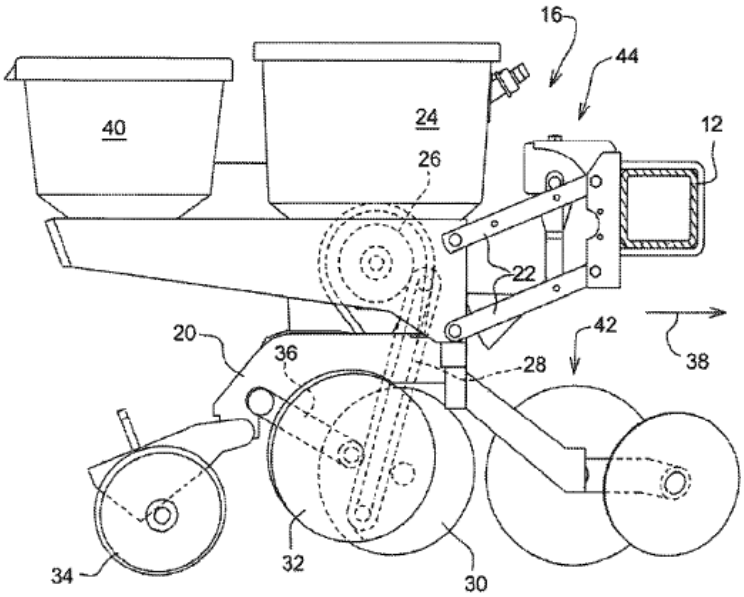

Figure 2 of the '906 patent discloses "parallelogram linkage 22 for mounting the row unit 16 to the tool bar 12 for up and down relative movement between the unit 16 and toolbar 12." Ex. 1001, 3:17–21. "Seed is stored in seed hopper 24 and provided to a seed meter 26," and "[f]rom the seed meter 26 the seed is carried by a delivery system 28 [shown in dashed lines] into a planting furrow, or trench, formed in the soil by furrow openers 30." *Id.* at 3:21–27. Figure 3 from the '906 patent, reproduced

below and annotated by Dr. Taylor, Petitioner's Declarant (Ex. 1002 ¶ 42), shows a more detailed side view of delivery system 28.

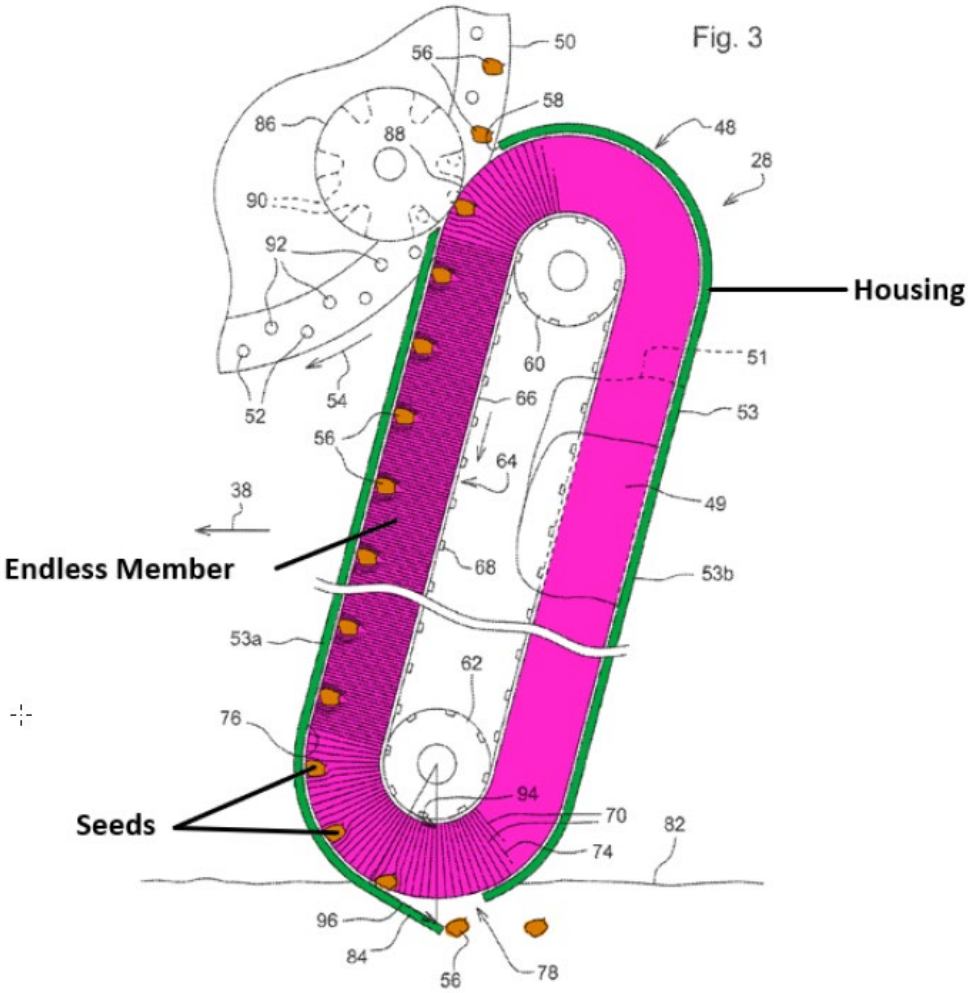

Figure 3 shows delivery system 28, with housing 48, adjacent to seed disk 50, containing apertures 52, of the seed meter. *Id.* at 3:40–51. Seeds 56 are collected on the apertures from a seed pool and adhere to the disk by air pressure differential on the opposite sides of disk 50, which the '906 patent acknowledges is done "in a known manner." *Id.* at 3:45–47. Inside housing 48 are mounted pulleys 60 and 62, which support belt 64 for rotation within the housing. *Id.* at 3:52–57. Attached to belt 64 by base member 66 are elongated thistles 70, which touch, or are close to touching, the inner surface

76 of side wall 53. *Id.* at 3:57–64. The belt rotates in a counterclockwise direction, transferring seeds from the seed meter to the delivery system, where "the bristles move or convey the seeds downward to the housing lower opening" 78, holding the seeds against side wall 53 along the way. *Id.* at 4:17–37. The seeds accelerate relative to the speed of the belt as they round the lower portion of the housing on their way to the lower opening 78, and are "discharged through the lower opening 78 into the seed trench." *Id.* at 4:40–46. The belt shown in Figure 3 has relatively long bristles. *Id.* at 4:53. The Specification explains:

> As a result of the long bristles and the seed loading point being at the end of the curved path of the brush around the pulley 60 results in the seeds being loaded into the belt while the bristles have slowed down in speed. The bristle speed at loading is thus slower than the bristle speed at the discharge opening as the belt travels around the pulley 62. This allows in the seed to be loaded into the belt at a relatively lower speed while the seed is discharged at the lower end at a desired higher speed.

Id. at 4:53–62.

The Specification explains that while brush bristles are the preferred embodiment, other materials can be used to grip the seed, such as a foam pad, expanded foam pad, mesh pad or fiber pad. *Id.* at 7:37–44.

E. Illustrative Claims

Petitioner challenges claims 1–20, which are all of the claims in the '906 patent. Claims 1, 8, and 15 are independent claims. Independent claims 1 and 8 are directed to a "seed delivery apparatus." Independent claim 15 is directed to a "method of delivering a seed from a seed meter to a furrow." Claim 1 is representative and is reproduced below.

1. A seed delivery apparatus comprising:

an elongated housing having a first opening through which seed is received into the seed delivery apparatus, a second opening through which seed exits the seed delivery apparatus, and an elongated interior chamber along which seed is conveyed from the first opening to the second opening; and

an endless member positioned within the elongated housing, the endless member positioned to receive seed through the first opening of the elongated housing, the endless member movable within the elongated interior chamber of the elongated housing to

convey seed away from the first opening at a first velocity,

accelerate seed toward the second opening, and

discharge seed through the second opening at second velocity greater than the first velocity.

Ex. 1001, 7:50–67.

F. Prior Art and Asserted Grounds

Petitioner asserts that claims 1–20 would have been unpatentable on the following ground:

Claim(s) Challenged	35 U.S.C. §[5]	Reference(s)/Basis
1–20	103	Hedderwick[6] and Koning[7]

[5] The relevant sections of the Leahy-Smith America Invents Act ("AIA"), Pub. L. No. 112–29, took effect on March 16, 2013. Because the application that issued as the '906 patent states that it is a continuation of two prior applications, the earliest of which was filed February 2, 2009 (*see* Ex. 1001, code (63) (Related U.S. Application Data), we apply the pre-AIA versions of these statutes. *See* 35 U.S.C. § 100(i).
[6] U.K. Pat. Appl. GB 2,057,835 A, Pub. Apr. 8, 1981. Ex. 1003 ("Hedderwick").
[7] U.S. Pat. No. 4,193,523, issued March 18, 1980. Ex. 1004 ("Koning").

II. MOTION TO EXCLUDE

Petitioner and Patent Owner each move to exclude a substantial number of exhibits on a number of different evidentiary grounds. *See* Pet. Mot. Excl.; PO Mot. Exclude. As our analysis does not refer to any of those exhibits, we dismiss each motion as moot.

Our general approach for considering challenges to the admissibility of evidence was outlined in *Corning Inc. v. DSM IP Assets B.V.*, IPR2013-00053, Paper 66 at 19 (PTAB May 1, 2014). As stated in *Corning*, similar to a district court in a bench trial, the Board, sitting as a non-jury tribunal with administrative expertise, is well-positioned to determine and assign appropriate weight to evidence presented. *Id.* (citing *Donnelly Garment Co. v. NLRB*, 123 F.2d 215, 224 (8th Cir. 1941) (stating, in the context of reviewing an administrative determination of the National Labor Relations Board based on findings by a Trial Examiner, "We think that experience has demonstrated that in a trial or hearing where no jury is present, more time is ordinarily lost in listening to arguments as to the admissibility of evidence and in considering offers of proof than would be consumed in taking the evidence proffered . . . . One who is capable of ruling accurately upon the admissibility of evidence is equally capable of sifting it accurately after it has been received . . . .")).

Moreover, "there is a strong public policy for making all information filed in an administrative proceeding available to the public." *Liberty Mut. Ins. Co. v. Progressive Cas. Ins. Co.,* CBM2012-00010, Paper 59 at 40 (PTAB Feb. 24, 2014). Rather than excluding evidence that is allegedly hearsay, confusing, misleading, untimely, and/or irrelevant, we will simply

not rely on it or give it little or no probative weight, as appropriate, in our analysis, which is what we have done here.

"In an *inter partes* review, we regard it as the better course to have a complete record of the evidence to facilitate public access, as well as appellate review." *Sony Computer Entm't Am. LLC v. Game Controller Tech. LLC*, IPR2013-00634, Paper 32 at 32 (PTAB Apr. 14, 2015); *see also Gnosis S.p.A. v. S. Alabama Med. Sci. Found.*, IPR2013-00118, Paper 64 at 43 (PTAB June 20, 2014) (citing *Donnelly*, 123 F.2d at 224 ("If the record on review contains not only all evidence which was clearly admissible, but also all evidence of doubtful admissibility, the court which is called upon to review the case can usually make an end of it, whereas if evidence was excluded which that court regards as having been admissible, a new trial or rehearing cannot be avoided.")).

III. ANALYSIS

A. Legal Standards

Section 103(a) forbids issuance of a patent when "the differences between the subject matter sought to be patented and the prior art are such that the subject matter as a whole would have been obvious at the time the invention was made to a person having ordinary skill in the art to which said subject matter pertains." *KSR Int'l Co. v. Teleflex, Inc.*, 550 U.S. 398, 406 (2007). The question of obviousness is resolved on the basis of underlying factual determinations, including: (1) the scope and content of the prior art; (2) any differences between the claimed subject matter and the prior art; (3) the level of ordinary skill in the art; and (4) when available, evidence such as commercial success, long felt but unsolved needs, and failure of others. *Graham v. John Deere Co.*, 383 U.S. 1, 17–18 (1966); *see KSR*, 550 U.S.

at 407 ("While the sequence of these questions might be reordered in any particular case, the [*Graham*] factors continue to define the inquiry that controls."). The Court in *Graham* explained that these factual inquiries promote "uniformity and definiteness," for "[w]hat is obvious is not a question upon which there is likely to be uniformity of thought in every given factual context." *Graham*, 383 U.S. at 18.

The Supreme Court made clear that we apply "an expansive and flexible approach" to the question of obviousness. *KSR*, 550 U.S. at 415. Whether a patent claiming the combination of prior art elements would have been obvious is determined by whether the improvement is more than the predictable use of prior art elements according to their established functions. *Id*. at 417. To support this conclusion, however, it is not enough to show merely that the prior art includes separate references covering each separate limitation in a challenged claim. *Unigene Labs., Inc. v. Apotex, Inc*., 655 F.3d 1352, 1360 (Fed. Cir. 2011). Rather, obviousness additionally requires that a person of ordinary skill at the time of the invention "would have selected and combined those prior art elements in the normal course of research and development to yield the claimed invention." *Id*.

Moreover, in determining the differences between the prior art and the claims, the question under 35 U.S.C. § 103 is not whether the differences themselves would have been obvious, but whether the claimed invention as a whole would have been obvious. *Litton Indus. Prods., Inc. v. Solid State Sys. Corp*., 755 F.2d 158, 164 (Fed. Cir. 1985) ("It is elementary that the claimed invention must be considered as a whole in deciding the question of obviousness."); *see also Stratoflex, Inc. v. Aeroquip Corp*., 713 F.2d 1530, 1537 (Fed. Cir. 1983) ("[T]he question under 35 U.S.C. § 103 is not whether

the differences *themselves* would have been obvious. Consideration of differences, like each of the findings set forth in *Graham*, is but an aid in reaching the ultimate determination of whether the claimed invention *as a whole* would have been obvious.”).

As a factfinder, we also must be aware “of the distortion caused by hindsight bias and must be cautious of arguments reliant upon *ex post* reasoning.” *KSR*, 550 U.S. at 421.

Against this general background, we consider the references, other evidence, and arguments on which the parties rely.

B. Level of Ordinary Skill in the Art

The level of skill in the art is “a prism or lens through which a judge, jury, or the Board views the prior art and the claimed invention.” *Okajima v. Bourdeau*, 261 F.3d 1350, 1355 (Fed. Cir. 2001). “This reference point prevents these factfinders from using their own insight or, worse yet, hindsight, to gauge obviousness.” *Id.*

Factors pertinent to a determination of the level of ordinary skill in the art include: (1) educational level of the inventor; (2) type of problems encountered in the art; (3) prior art solutions to those problems; (4) rapidity with which innovations are made; (5) sophistication of the technology; and (6) educational level of workers active in the field. *Envt’l. Designs, Ltd. v. Union Oil Co*., 713 F.2d 693, 696–697 (Fed. Cir. 1983) (citing *Orthopedic Equip. Co. v. All Orthopedic Appliances, Inc.*, 707 F.2d 1376, 1381–82 (Fed. Cir. 1983)). Not all such factors may be present in every case, and one or more of these or other factors may predominate in a particular case. *Id*. Moreover, these factors are not exhaustive but are merely a guide to

determining the level of ordinary skill in the art. *Daiichi Sankyo Co. Ltd, Inc. v. Apotex, Inc.*, 501 F.3d 1254, 1256 (Fed. Cir. 2007).

In determining a level of ordinary skill, we also may look to the prior art, which may reflect an appropriate skill level. *Okajima*, 261 F.3d at 1355.

Additionally, the Supreme Court informs us that "[a] person of ordinary skill is also a person of ordinary creativity, not an automaton." *KSR*, 550 U.S. at 421 (2007).

Petitioner asserts that a person of ordinary skill would have had "(1) a bachelor's degree plus four years' experience in mechanical engineering, agricultural engineering, or a related field; or (2) a master's degree plus two years' experience in mechanical engineering, agricultural engineering, or a related field." Pet. 36 (citing Ex. 1002 ¶ 18). Petitioner provides no analysis of the factors supporting this conclusion. Dr. Taylor opines this same level of ordinary skill, but adds the additional sentence that "Such a person would have been familiar with the mechanics and design of agricultural planters." Ex. 1002 ¶ 18. Dr. Taylor does not disclose the underlying facts or data on which his opinion is based. *See* 37 C.F.R. § 42.65(a) ("Expert testimony that does not disclose the underlying facts or data on which the opinion is based is entitled to little or no weight."); *TQ Delta, LLC v. Cisco Sys., Inc.*, Nos. 2018-1766, 1767, slip op. at 10 (Fed. Cir. Nov. 22, 2019) ("Conclusory expert testimony does not qualify as substantial evidence.") (citations omitted).

Patent Owner proposes a slightly different level of ordinary skill. According to Patent Owner, a person of ordinary skill in the relevant technology would have had an undergraduate degree in mechanical engineering, agricultural engineering, or closely related field, and "about

two years of experience designing agricultural products or related machinery in industry or academia." PO Resp. 2 (citing Ex. 2206 ¶¶ 47–52). Patent Owner also proposes that, as an alternative, a person of ordinary skill could have had "about five years of experience designing agricultural products or related machinery, without a four-year undergraduate engineering degree." *Id.* Patent Owner adds that "[s]uch a person would typically have experience designing projects on a component or small sub-system-level rather than redesigning a larger planting system." *Id.*

Dr. Glancey, Patent Owner's expert Declarant, explains that, in his opinion, Petitioner's proposed level of ordinary skill is "too restrictive and sets the level of ordinary skill in the art of the '906 Patent too high." Ex. 2206 ¶ 49. Dr. Glancey provides three reasons why he holds this opinion: (1) undergraduate engineering curriculums in place in February 2009 focused on design at the freshman level and continued this focus throughout the student's degree program, thus avoiding the need for significant post-graduate design experience (*id.* ¶ 50); (2) masters programs in engineering focus on research for publication in peer-reviewed journals, rather than designing products for industry (*id.* ¶ 51); and (3) engineering technicians, who may not have formal engineering degrees, "often have years' worth of relevant hands-on experience," which, in Dr. Glancey's opinion, qualifies him or her to be "considered POSITAs with respect to the '906 Patent" (*id.* ¶ 52).

At the hearing, Counsel for Petitioner stated that the different experience levels for a person of ordinary skill proposed by the parties was "not outcome . . . determinative" (Tr. 36:17) and that the challenged claims would have been obvious applying "either [party's] definition" of the level

of ordinary skill (*id.* at 36:18–19). Counsel for Patent Owner took a different view. He stated the level of ordinary skill "does matter" (*id.* at 68:4) and "could make a difference" (*id.* at 68:12) in the outcome.

Based on the prior art, Dr. Glancey's opinion testimony and analysis, and providing some, but minimal, weight to Dr. Taylor's opinion testimony, we determine that the evidence favors Patent Owner's proposed level of skill, primarily based on Dr. Glancey's analysis and reasons summarized above.

Accordingly, we determine that a person of ordinary skill in a technology pertinent to the challenged claims would have had an undergraduate degree in mechanical engineering, agricultural engineering, or similar field, and two years of experience designing agricultural products or related machinery, or five years of experience designing agricultural products or related machinery, without a four-year undergraduate engineering degree. A recipient of other academic degrees may qualify as a person of ordinary skill if they have taken coursework or have experience in the pertinent technology. Additional education could offset less work experience; additional work experience could offset less education or coursework.

C. Claim Construction

The Petition was filed on May 30, 2019. *See* Paper 5. This filing date is after the Patent and Trademark Office implemented a rule on claim construction adopting the same claim construction standard that would be used to construe the claim in a civil action under 35 U.S.C. § 282(b). *See* Changes to the Claim Construction Standard for Interpreting Claims in Trial Proceedings Before the Patent Trial and Appeal Board, 83 Fed. Reg. 51,340

(Oct. 11, 2018) (amending 37 C.F.R. § 42.100(b) effective November 13, 2018) (now codified at 37 C.F.R. § 42.200(b) (2019). The claim construction standard used in a civil action under 35 U.S.C. § 282(b) is generally referred to as the *Phillips* standard. *See Phillips v. AWH Corp.*, 415 F.3d 1303 (Fed. Cir. 2005) (en banc). This rule was effective on November 13, 2018, and applies to all petitions filed on or after the effective date. 83 Fed. Reg. 51,340. Thus, the new claim construction rule applies to this proceeding.

Under the *Phillips* standard, words of a claim generally are given their ordinary and customary meaning. *Phillips*, 415 F.3d at 1312. "[T]he ordinary and customary meaning of a claim term is the meaning that the term would have to a person of ordinary skill in the art in question at the time of the invention." *Id*. at 1313. Importantly, the person of ordinary skill in the art is deemed to read the claim term not only in the context of the particular claim in which the disputed term appears, but in the context of the entire patent, including the specification. *Id*.

Petitioner submits that no terms need to be specifically construed for purposes of resolving the issues raised in the Petition. Pet. 34. Although taking this position in this proceeding, we note that Petitioner provides a two-page footnote providing an analysis of the claim term "endless member." *See id.*, 34–36, n.6.

Patent Owner notes that the District Court in the Delaware Case construed the terms "endless member" and "seed delivery apparatus" (PO Resp. 2–3 (emphasis omitted) (citing Ex. 1038)). The District Court construed "endless member" to mean "a continuous conveyor forming a loop, such as a belt or a chain." Ex. 1038, 2. The District Court construed

"seed delivery apparatus" to mean an apparatus "that removes seed from the seed meter by capturing the seed and then delivers it to a discharge position." Ex. 1038, 3. The Court's Order states its conclusions on claim constructions without any discussion or analysis. *See* Ex. 1038.

Patent Owner proposes additional constructions for the terms "ejecting" and "flexes to discharge seed." PO Resp. 3.

"[W]e need only construe terms 'that are in controversy, and only to the extent necessary to resolve the controversy.'" *Nidec Motor Corp. v. Zhongshan Broad Ocean Motor Co. Ltd.*, 868 F.3d 1013, 1017 (Fed. Cir. 2017) (quoting *Vivid Techs., Inc. v. Am. Sci. & Eng'g, Inc.*, 200 F.3d 795, 803 (Fed. Cir. 1999)). We determine that an explicit construction of the claims is not necessary for the purposes of determining whether the challenged claims are not patentable.

D. Ground 1

The sole Ground of unpatentability asserted by Petitioner is that claims 1–20 of the '906 patent would have been obvious over the combination of Hedderwick and Koning. *E.g.* Pet. 9 ("Petitioners request cancellation of claims 1-20 of the '906 patent . . . as being unpatentable . . . over Hedderwick and Koning.").[8]

[8] In footnote 7, Petitioner states "the ['906] patent discloses an 'endless member' as a brush belt with bristles, or belt with other materials, that grip the seed. Should the Patent Owner argue that an 'endless member' is broader than this, and includes other types of endless belts, such as flighted belts or belts with cells, then the claims of the '906 patent are still unpatentable in view of Hedderwick, either with or without Koning's brush belt." Pet. 37, n.7. Petitioner, however, has not addressed this speculative possibility in this proceeding. Patentability based on Hedderwick alone is not before us.

1. Hedderwick (Ex. 1003)

We make the following findings of fact concerning Hedderwick.

Hedderwick discloses a "'precision seeder' . . . to deposit single seeds at predetermined spacings in seed beds . . . [or] in unprepared soil." Ex. 1003, 1:5–14. Hedderwick states that if seeds are planted as doubles or triples the two seedlings from such a planting will tend to kill off one another. If the seedlings are too close together then they also tend to choke off one another and if they are too far apart then the economy of the business is adversely affected as more space than is essential would be used. *Id.* at 1:14–21.

Figure 4, annotated by Petitioner (Pet. 22) and reproduced below, discloses a side elevation view of one embodiment of the disclosed seeder. *See* Ex. 1003, 1:108–110.

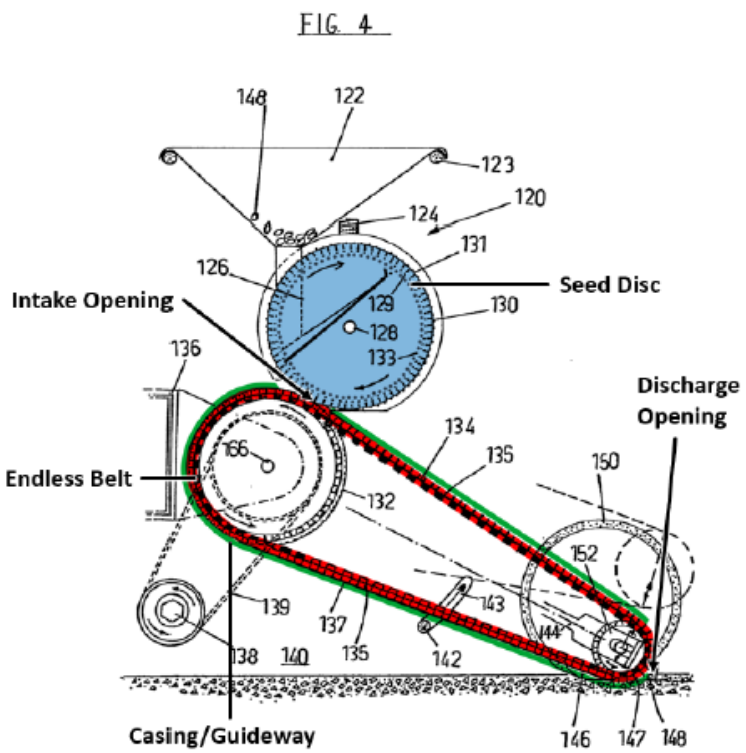

Figure 4 shows the components of seeder unit 120, which comprises hopper 122, sub hopper 126, singling disc 130. *Id.* at 4:6–10. Figure 4 also shows endless belt 134, with fins 135 "projecting upwardly therefrom," which rides in guideway 137. *Id.* at 4:23–28. The belt and fins define "cells" that align with orifices 129 of disc 130. *Id.* at 4:25–5:2. Seeds are released singly from orifices 129 and rotated to positions that mate with the cells of the endless belt and fins. *Id.* at 5:51–60. Seeds 148 are conveyed down along moving belt 134, driven by counterclockwise-turning sprocket 132, to a position behind plow 146, where gravity forces the seeds along fins 135 to ensure uniform positioning of seeds. *Id.* at 5:72–78. The seeds are conveyed until they reach a discharge opening slightly above bottom dead center of the bottom pulley over which the endless belt rides, whereby each seed rests against a fin at the moment of discharge. *Id.* at 6:60–72.

2. Koning (Ex. 1004)

We make the following findings of fact concerning Koning.

Koning discloses a planting machine for potatoes, bulbs or similar seed crop. Ex. 1004, 1:5–17. The objective of the disclosed planting machine is to ensure a particularly uniform distribution of the seed crop, even if the seed crop has different sizes and if the shape of the seed crop is irregular. *Id.*

Figure 2 of Koning, reproduced below, shows one embodiment of the claimed planting machine.

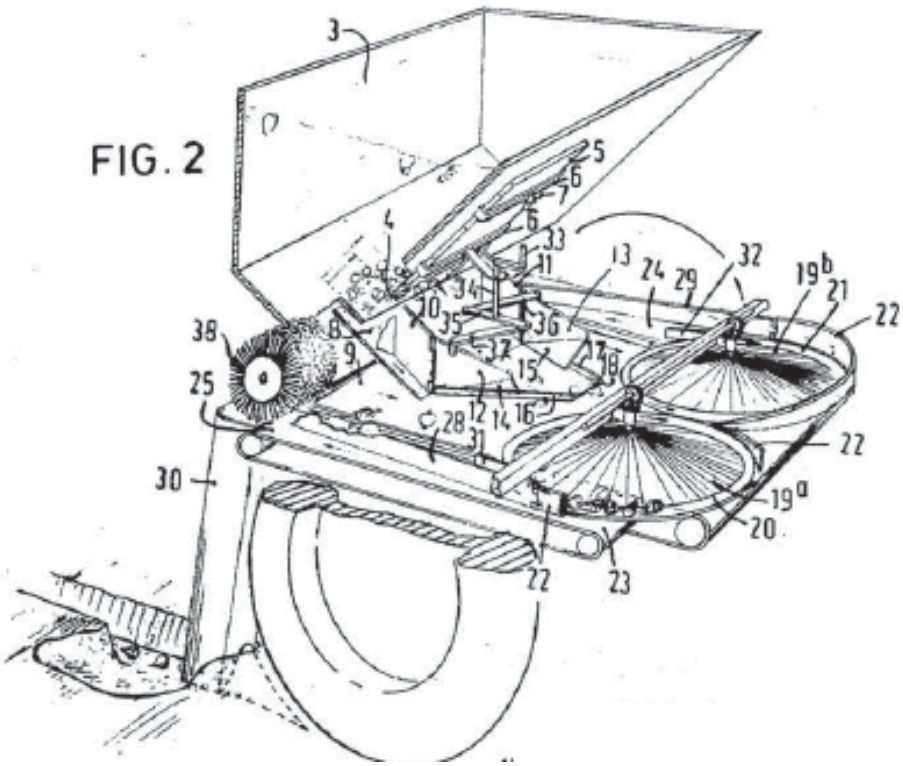

As shown in Figure 2, the planting machine generally includes hopper 3, conveying member 23, flat belt 25, and planting foot 30 at the "delivery end" of conveying member 23. *Id.* at 3:44–4:21. Figure 4 of Koning, annotated by Petitioner (Pet. 25) and reproduced below, discloses a side view of a different embodiment of a planting machine, on which Petitioner relies.

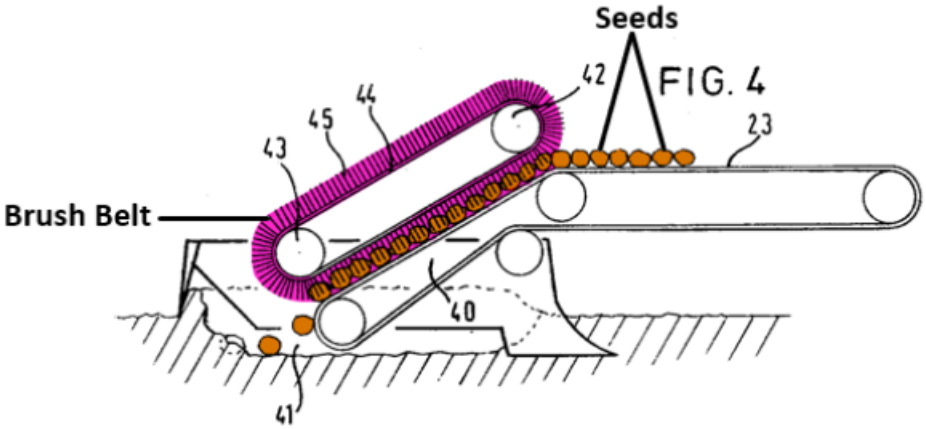

Figure 4 of Koning discloses conveying member 23 having a portion or part 40 thereof that extends in a backward direction to a point in furrow 41. *Id.* at 5:3–6. Belt 44 is above part or portion 40 of conveying member 23, is guided around rollers 42 and 43, and includes brush hairs 45. Ex. 1004, 5:6–8. Koning makes clear that it is brush hairs 45 of belt 44 that hold the seed crop on part 40 of belt or conveying member 23, so that the seed crop delivered by the conveying members are delivered at "the same distance in relation to each other in the furrow 41." *Id.* at 5:8–14. Thus, in Koning, it is the combination of two belts or conveying members, belt 44 with brush hairs 45, *and* belt 23 that function together to convey seeds to furrow 41. *Id.* at 5:11–14.

3. Independent Claim 1

Independent claim 1 claims a "seed delivery apparatus" having an "elongated housing" and an "endless member" that receives seed through a first opening in the housing and discharges seed through a second opening. Ex. 1001, 7:50–67. Claim 1 also requires that the velocity of the seed exiting from the second opening is greater than the velocity of the seed entering from the first opening. *Id.* at 7:63–67.

Petitioner provides a clause-by-clause analysis of each recited element in claim 1 asserting where each claimed element and limitation[9] is shown in Hedderwick and Koning, and why each *element* or *limitation* would have been obvious. *See generally*, Pet. 37–67; *see also, e.g. id.* at 45 (analyzing clause 1[a] and concluding, "Accordingly, the combination of Hedderwick and Koning renders obvious an elongated housing (casing 137) having a first opening (orifice 141) through which seed is directly received into the seed

[9] Petitioner labels these clauses "Elements" 1[a–h]

delivery apparatus."). *See Stratoflex.*, 713 F.2d at 1537 ("[T]he question under 35 U.S.C. § 103 is not whether the differences *themselves* would have been obvious. Consideration of differences, like each of the findings set forth in *Graham*, is but an aid in reaching the ultimate determination of whether the claimed invention *as a whole* would have been obvious."). As we explain below, Petitioner fails to meet its burden of proving the claimed invention as a whole would have been obvious because there is no persuasive evidence of a rationale why a person of ordinary skill would stitch together various pieces of the references, as proposed by Petitioner.

a) Overview of the Parties' Contentions

Petitioner relies on Hedderwick for the basic structure of the claimed apparatus or steps of the claimed method, but relies on Koning's belt 44 with brush hairs 45 (generally referred to as a "brush belt") to replace endless belt 134 in Hedderwick. Pet. 52 ("Thus, the combination of Hedderwick and Koning renders obvious an endless member (Koning's brush belt) positioned within an elongated housing (Hedderwick's casing)").

Petitioner makes clear that it "[does] not rely on Hedderwick alone for the seed delivery apparatus because [Hedderwick] allows gravity to impact seed movement." Pet. 39. Petitioner explains that Hedderwick "describes that the seeds may move about within the cells of the flighted belt." *Id.* (citing Ex. 1003, 5:72–79). Petitioner asserts that "Koning discloses a *system* using a brush belt with bristles that does not allow gravity to impact movement of seeds." *Id.* (emphasis added). As we explained above, Koning's *system* includes both belt 44 (with bristles 45) *and* belt 23 cooperating together to convey seeds. According to Petitioner, Koning's "bristles hold seeds as they are delivered to the ground so that they are

planted in the furrow at a reliably uniform spacing, in the same way as the bristles of the '906 patent." *Id.* Petitioner concludes that a person of ordinary skill "seeking to maximize control over seed movement would have been motivated to combine the teachings of Hedderwick and Koning by replacing Hedderwick's endless belt with Koning's brush belt to achieve the disclosed benefits of reliable and improved seed spacing." *Id.* at 41. Thus, it is clear that Petitioner's asserted basis of unpatentability is to replace endless belt 134 of Hedderwick with Koning's brush belt 44 with bristles 45. *Id.* at 48.

Petitioner summarizes its view of how Hedderwick, as modified by Koning, would function, as follows: "Hedderwick's seed disc would rotate to transfer individual seeds to the point where the disc mates with the intake opening in the casing. At this mating point, Koning's brush belt would capture the seeds and hold them in place until it delivers them to the ground." Pet. 41 (citations omitted).

Petitioner asserts that Hedderwick and Koning each describe the importance of controlling seed movement as the seeds travel to the ground to ensure uniform seed spacing. *Id.* at 28–29 (citing Ex. 1002 ¶¶ 58–60). Petitioner also asserts that "a POSITA desiring finer control over seed spacing would have recognized that substituting Koning's brush belt for Hedderwick's endless belt would provide certain specific benefits—delivering seeds the same distance apart and with a consistent velocity—that further their common goal of achieving accurate seed spacing." Pet. 29–30.

According to Petitioner, the reason why a person of ordinary skill would have combined the disclosures of Hedderwick and Koning would have been "to obtain the disclosed benefit of greater seed control provided

by Koning's brush belt." *Id.* at 30 (citing Ex. 1002 ¶ 61). It is Dr. Taylor's opinion that a "person of ordinary skill in the art would have been motivated to combine Hedderwick and Koning to realize the greater seed control provided by Koning's brush belt." Ex. 1002 ¶ 61.[10]

Patent Owner takes a different view of Petitioner's asserted unpatentability based on Hedderwick and Koenig. According to Patent Owner: Petitioner relies on "hindsight" to support its motivation to combine the asserted references (*e.g.,* PO Resp. 18–24); Koning and Hedderwick are in disparate fields and Koning is "non-analogous art." (*e.g., id.* at 15–18); Petitioner should be estopped from contending that Koning is *not* non-analogous art (*e.g., id.* at 8–15); and objective evidence "confirms nonobviousness" (*id.* at 36–81).

b) Motivation to Combine and Reasonable Expectation of Success

Of the many disputed issues summarized in the preceding section, our analysis focuses on whether an ordinarily skilled artisan would have been motivated to combine the references in the manner Petitioner proposes, and

---

[10] Although the parties, and thus the Board, focus on whether it would have been obvious to modify Hedderwick with the brush belt of Koning, the challenged claims do *not* include the term "brush belt." We do not hold, and this Decision should not be understood to suggest, that the "endless member" claim term in the '906 patent requires a brush belt. The challenge Petitioner asserts, however, is to replace the endless belt of Hedderwick with Koning's brush belt, so that is the challenge we must evaluate. *See SAS Inst., Inc. v. Iancu*, 138 S. Ct. 1348, 1356 (2018) ("the petitioner's petition . . . is supposed to guide the life of the litigation," and it would "not be proper for the Board to deviate from the grounds in the petition and raise its own obviousness theory."); *Koninklijke Philips N.V. v. Google LLC*, 948 F.3d 1330, 1336 (Fed. Cir. 2020) (quoting *SAS*, 138 S. Ct. at 1356) ("the Board does not 'enjoy[] a license to depart from the petition and institute a *different* inter partes review of [its] own design.'").

would have reasonably expected success in doing so. Because those issues are dispositive of Petitioner's challenge, it is unnecessary for us to resolve the other disputed issues. *See, e.g.*, *Adidas AG v. Nike, Inc*., 963 F.3d 1355, 1359 (Fed. Cir. 2020) (affirming Board's determination that claims were not shown to be obvious because the petitioner had not demonstrated that an ordinarily skilled artisan would have been motivated to combine the references); *Samsung Electronics Co. v. Elm 3DS Innovations*, LLC, 925 F.3d 1373, 1383 (Fed. Cir. 2019) (determining that it unnecessary to reach other issues when reasonable expectation of success is dispositive).

In determining whether there would have been a motivation to combine prior art references to arrive at the claimed invention, it is insufficient to simply conclude the combination would have been obvious without identifying any reason *why* a person of skill in the art would have made the combination. *Metalcraft of Mayville, Inc. v. The Toro Co.*, 848 F.3d 1358, 1366 (Fed. Cir. 2017). "The question is not whether the various references separately taught components of the [ ] Patent formulation, but whether the prior art suggested the selection and combination achieved by the [ ] inventors." *Orexo AB v. Actavis Elizabeth LLC*, 903 F.3d 1265, 1273 (Fed. Cir. 2018).

As asserted by Patent Owner, "Koning's [brush] belt does not convey seeds; it merely "***hold[s] the potatoes lying on the conveying members 23***." PO Resp. 19 (citations omitted). Patent Owner further explains that "[f]undamentally, *Koning's [brush] belt*, which is intended to steady potatoes while they are conveyed, *is not a conveyor belt*. Instead, it is a moving belt positioned over top of the potatoes not intended to support the weight of those objects." *Id.* at 20 (emphasis added) (citing Ex. 2206,

¶¶ 134–136). Dr. Glancey opines, with supporting data and analysis, that conveying member 23 in Koning "supports about 87% of the seed potato weight in the orientation taught by Koning." Ex. 2206 ¶ 137. He concludes that "it is clear from this proof that the Koning belt with brush hairs cannot and does not support the weight of the seed potatoes being conveyed to the soil." *Id.*

Additionally, Patent Owner asserts:

> Koning does not suggest using a brush-belt for retaining and conveying seeds in the absence of a separate conveying member to bear their weight and a POSA would not predict that such a belt could be used successfully for that purpose because, for among other reasons, a POSA would not predict that such a belt would successfully receive, retain or convey small seeds on its own due to the unique and unpredictable dynamics of such a belt.

PO Resp. 20.

Dr. Glancey, Patent Owner's expert declarant, testifies that "[a] POSITA would not have isolated Koning's belt with brush hairs from Koning's other teachings for combination with other non-analogous systems, because Koning's [brush] belt was not—and was not taught as being—a modular 'off the shelf' component with predictable uses." Ex. 2206 ¶ 134. Dr. Glancey further explains, "[a] POSITA reviewing Koning's disclosure of using a belt with brush hairs to cover and hold potatoes conveyed on a separate conveying surface could not predict that such a belt would successfully receive, retain or convey small seeds on its own as would be required in Petitioners' proposed combination." Ex. 2206 ¶ 136. Dr. Glancey provides an analysis of why he reaches this conclusion:

> the properties of brush belts, especially belts moving at speeds corresponding to seed dispensing rates common for such small seeds, make it unlikely that seeds will enter the belt in the

> absence of a loading surface especially adapted to insert the seeds into the belt, and nothing in Koning's disclosure suggests using a belt with brush hairs to support the entire weight of the seeds or to convey them without the presence of a separate conveying member.

Id. Dr. Glancey also concludes that "A POSITA would not have been motivated to isolate Koning's belt with brush hairs, remove it from Koning's planting machine, adapt it for use in completely different system, and repurpose it to perform a new and undisclosed function (as a conveyor), as proposed by Petitioners." *Id.* ¶ 139. According to Dr. Glancey's testimony,

> A device such as Koning's [brush] belt that *covers* relatively massive seed objects such as potatoes is not the same as a device such as Hedderwick's finned belt which alone *carries* smaller seeds. The only evidence I have seen to suggest that a POSITA would use a brush belt for carrying seeds rather than covering them is the '906 Patent.

Id. ¶ 145.

Additionally, Patent Owner asserts that the complex fluid-like dynamics of moving brush hairs are not readily adaptable to *carrying* small objects. PO Resp. 25–30 (citing Ex. 2206 ¶¶ 162–170).

Neither the references, other evidence, nor Dr. Taylor provide sufficiently persuasive evidence, even in combination, to establish why a person of ordinary skill would have modified Hedderwick by (1) selectively gleaning only a *portion* of Koning's conveying system, i.e., belt 44 with bristles 45, (2) selectively excluding Koning's belt 23, and then (3) modifying Koning's brush belt by reversing its orientation so that it *carries* seeds deposited into the bristles, as in the '906 patent, rather than *covering and guiding* seeds carried by a separate and distinct conveyor belt, as in Koning. *See WBIP, LLC v. Kohler Co.*, 829 F.3d 1317, 1327 (Fed. Cir.

2016) (finding an absence of a motivation to reverse parts to an orientation that was "*totally backwards*" from what one of skill in the art would even attempt). Petitioner's arguments do not acknowledge the different function of Koning's brush belt, or explain why a person of ordinary skill would have been motivated to adapt Koning's brush belt to such a use and reasonably expect success in doing so.

We determine Petitioner fails to meet its burden of providing a sufficiently persuasive explanation or reason for concluding that one of skill in the art would have combined these particular references to produce the claimed invention. "Without any explanation as to how or why the references would be combined to arrive at the claimed invention, we are left with only hindsight bias." *Metalcraft v. Toro*, 848 F.3d at 1367. "[W]e cannot allow hindsight bias to be the thread that stitches together prior art patches into something that is the claimed invention." *Id*.

The existence of common elements found in both the challenged claims and the references relied on by Petitioner does not establish that the challenged claims would have been obvious. "[A] patent composed of several elements is not proved obvious merely by demonstrating that each of its elements was, independently, known in the prior art." *KSR*, 550 U.S. at 418. "[I]nventions in most, if not all, instances rely upon building blocks long since uncovered, and claimed discoveries almost of necessity will be combinations of what, in some sense, is already known." *Id.* at 418–419.

Petitioner and Dr. Taylor (Ex. 1002 ¶¶ 57–67) focus on the brush belt of Koning (belt 44 with brush hairs 45), without considering that the brush belt is only one element of a two-element conveying system, or endless

member. Koning's brush belt works in concert with conveying member 23 to hold seeds in place as they are conveyed into the furrow.

Petitioner argues that "[t]he use of brushes to control movement of seeds was also well-known." E.g., Pet. 13 (citing Ex. 1015, Ex. 1030). Neither Thiemke (Ex. 1015) [11] nor Gould (Ex. 1030) [12], however, discloses a brush belt that carries seeds released into the brush hairs.

Figures 3 and 4 of Thiemke are reproduced below:

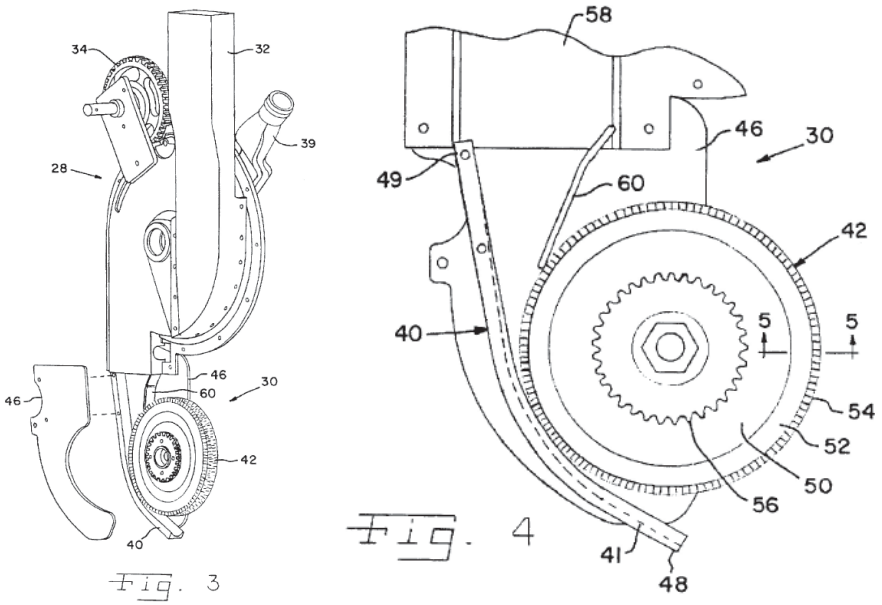

Figures 3 and 4 are perspective and side views, respectively, of a seed placement system. Ex. 1015, 3:5–9.

Thiemke explains that seeds discharged from seed metering system 28 are guided by deflector 60 into a nip area between wheel 42 and seed slide 40. *Id.* at 5:47–54. Thiemke teaches that a "gap of approximately one millimeter between the circumferential periphery of wheel 42 and seed slide 40 ensures that the seed is gripped by gripping outside layer 54," which can be formed of nylon bristles. *Id.* at 5:54–57, 5:1–10. Thiemke does not

[11] U.S. Pat. No. 6,651,570 B1, issued Nov. 25, 2003.
[12] U.S. Pat. No. 1,376,933, issued May 3, 1921.

suggest that brush belts can capture seeds released into the brush hairs; indeed, deflector 60 prevents seed from dropping onto the top of wheel 42 in a manner that would be comparable to how Petitioner proposes seed would be captured by Koning's brush belt in the proposed combination.

Gould describes a machine "for taking an individual plant from a quantity, depositing it positively in the ground and properly covering it, and operating with great rapidity." Ex. 1030, 1:25–30. Figure 4 of Gould is reproduced below:

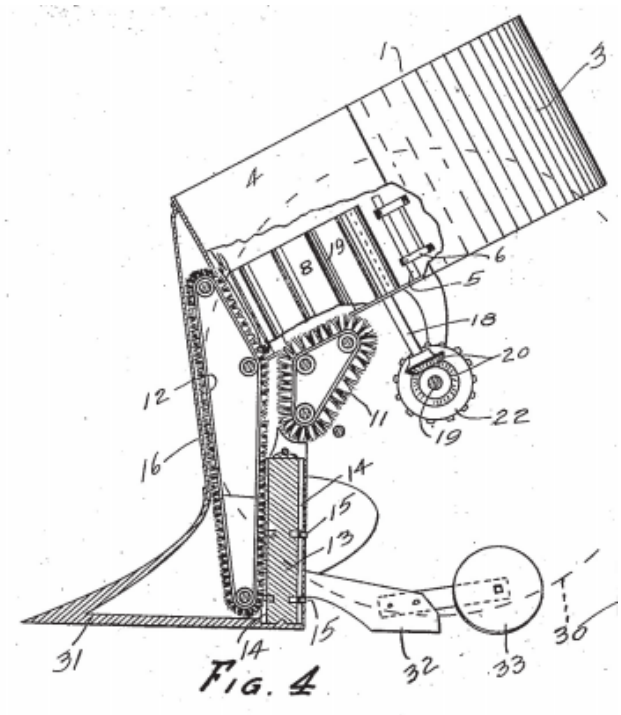

Figure 4 shows a sectional side elevation view of Gould's plant-setting machine. *Id.* at 1:38.

Gould explains that brush belt 11 operates beneath hopper 1 and "travels vertically downward . . . and cooperates with a second brush belt 12 to move the plant from the hopper." *Id.* at 1:75–82. In considering Gould's teaching of two vertically oriented and opposed brush belts that cooperate to move

plants from a hopper, we see little relevance to Petitioner's proposal to load seeds into a brush belt by releasing them directly into the bristles.

It is Petitioner's burden to establish that a person of ordinary skill would have been motivated to combine the references in the proposed manner and would have reasonably expect success in doing so. *See* 35 U.S.C. § 316(e); *In re Magnum Oil Tools Int'l, Ltd.*, 829 F.3d 1364, 1376 (Fed. Cir. 2016). Petitioner's arguments and evidence do not carry that burden.

c) Conclusion for Claim 1

KSR cautions a factfinder to be aware of the "distortion caused by hindsight bias" and to be "cautious of arguments reliant upon *ex post* reasoning. *KSR*, 550 U.S. at 421. Petitioner's proposed combination of the cited references does not meet its burden of providing a sufficiently persuasive evidence-based reason why a person of ordinary skill would have selectively gleaned isolated elements from Koning, modified their operation, and then combined them with Hedderwick to arrive at the invention recited in independent claim 1.

Based on the Petition and the evidence of record, we determine that Petitioner has *not* established by a preponderance of the evidence that claim 1 is unpatentable.

4. Independent Claims 8 and 15

Independent claim 8, like claim 1, is directed to a "seed delivery apparatus." Ex. 1001, 8:21–35. Independent claim 8, like claim 1 includes an elongated housing and an endless member positioned within the housing that receives seed from an opening in the housing. Independent claim 15 is a method counterpart of claims 1 and 8. *Id.* at 8:56–9:5.

We have not been directed to any persuasive evidence of any substantive differences between claims 1, 8, and 15 that would cause a different analysis or conclusion for claims 8 and 15 from the conclusion reached for claim 1. Accordingly, based on the analysis and evidence discussed above for claim 1, we determine that Petitioner has *not* established by a preponderance of the evidence that claims 8 and 15 are unpatentable.

5. Dependent Claims 2–7, 9–14, 16–20

Dependent claims 2–7 depend from claim 1. Dependent claims 9–14 depend from claim 8. Dependent claims 16–20 depend, directly or indirectly, from claim 15. These claims stand with the claims from which they depend.

Accordingly, based on the analysis and evidence discussed above for claim 1, we determine that Petitioner has *not* established by a preponderance of the evidence that dependent claims 2–7, 9–14, 16–20 are unpatentable.

IV. CONSTITUTIONAL CHALLENGE

In a single sentence, Patent Owner states it "challenges the constitutionality of, and the panel's authority to adjudicate, this proceeding under *Arthrex, Inc. v. Smith & Nephew Inc.*, 941 F.3d 1320 (Fed. Cir. 2019)." PO Resp. 81.[13] No additional argument or explanation of Patent Owner's challenge is presented.

This constitutional issue has been addressed by the Federal Circuit's decision in *Arthrex*, 941 F.3d at 1337 ("This as-applied severance . . . cures the constitutional violation."); *see also Arthrex, Inc. v. Smith & Nephew,*

[13] We note that the Supreme Court has accepted this case for review. *Arthrex, Inc. v. Smith & Nephew, Inc.*, 941 F.3d 1320 (Fed. Cir. 2019), *cert. granted sub nom. United States v. Arthrex, Inc.*, 2020 WL 6037206 (Oct. 13, 2020).

Inc., 953 F.3d 760, 764 (Fed. Cir. 2020) (Moore, J., concurring in denial of rehearing) ("Because the APJs were constitutionally appointed as of the implementation of the severance, *inter partes* review decisions going forward were no longer rendered by unconstitutional panels."). Accordingly, we do not consider this issue any further for this Decision.

V. CONCLUSION

Petitioner has not established by a preponderance of the evidence that claims 1–20 are unpatentable.

VI. ORDER

In consideration of the foregoing, it is hereby:

ORDERED that claims 1–20 have not been proven by a preponderance of the evidence to be unpatentable;

FURTHER ORDERED that Petitioner's Motion to Exclude is dismissed as moot;

FURTHER ORDERED that Patent Owner's Motion to Exclude is dismissed as moot; and

FURTHER ORDERED that, because this is a final written decision, parties to this proceeding seeking judicial review of our Decision must comply with the notice and service requirements of 37 C.F.R. § 90.2.

In summary:

Claims	**35 U.S.C. §**	**Reference(s)/Basis**	**Claims Shown Unpatentable**	**Claims Not shown Unpatentable**
1–20	103	Hedderwick, Koning		1–20

FOR PETITIONER:

Grant K. Rowan
Mary V. Sooter
R. Gregory Israelsen
WILMER, CUTLER, PICKERING,
HALE AND DORR, LLP
grant.rowan@wilmerhale.com
mindy.sooter@wilmerhale.com
greg.israelsen@wilmerhale.com

FOR PATENT OWNER:

Jay I. Alexander
Peter P. Chen
Richard L. Rainey
Nicholas L. Evoy
Rajesh D. Paul
COVINGTON & BURLING LLP
jalexander@cov.com
pchen@cov.com
rrrainey@cov.com
nevoy@cov.com
rpaul@cov.com