Trials@uspto.gov
571-272-7822

Paper 91
Entered: December 31, 2020

UNITED STATES PATENT AND TRADEMARK OFFICE

BEFORE THE PATENT TRIAL AND APPEAL BOARD

PRECISION PLANTING LLC, AGCO CORPORATION,
Petitioner,

v.

DEERE & COMPANY,
Patent Owner.

IPR2019-01052
Patent 9,820,429 B2

Before, BARRY L. GROSSMAN, JAMES A. TARTAL, and TIMOTHY J. GOODSON, *Administrative Patent Judges.*

GROSSMAN, *Administrative Patent Judge*.

JUDGMENT
Final Written Decision
Determining No Challenged Claims Unpatentable
Dismissing Petitioner's Motion to Exclude
Dismissing Patent Owner's Motion to Exclude
35 U.S.C. § 318(a)

I. INTRODUCTION

A. Background and Summary

Precision Planting LLC and AGCO Corporation (collectively "Petitioner") filed a Petition requesting an *inter partes* review of claims 1–4, 6–11, and 13–20 of U.S. Patent No. 9,820,429 B2 ("the '429 patent"). Paper 4 ("Pet."). Deere & Company ("Patent Owner") filed a Preliminary Response. Paper 10 ("Prelim. Resp."). After receiving our authorization to do so, Petitioner filed a Reply (Paper 11) and Patent Owner filed a Sur-Reply (Paper 13).

We concluded that Petitioner satisfied the burden, under 35 U.S.C. § 314(a), to show that there was a reasonable likelihood that Petitioner would prevail with respect to at least one of the challenged claims. Accordingly, on behalf of the Director (37 C.F.R. § 42.4(a)), and in accordance with *SAS Inst., Inc. v. Iancu*, 138 S. Ct. 1348, 1353 (2018), we instituted an *inter partes* review of all the challenged claims, on all the asserted grounds. Paper 19 ("Dec. Inst.").

Patent Owner filed a Response. Paper 33 ("PO Resp."). Petitioner filed a Reply. Paper 58 ("Reply"). Patent Owner filed a Sur-Reply. Paper 65 ("Sur-Reply").

Petitioner submitted 113 exhibits. *See* Exs. 1001–1148 (not consecutive; some exhibit numbers not used); *see also* Ex. 1148 (Joint Exhibit Index concordance of exhibits in this proceeding and the related post-grant proceedings). Petitioner relies, in part, on the Declaration testimony of Douglas S. Prairie. *See* Ex. 1002[1].

---

[1] Mr. Prairie earned a B.S. in Agricultural Engineering, and an M.S. in Mechanical Engineering. He is a registered Professional Engineer in Idaho.

Patent Owner submitted 232 exhibits. *See* Exs. 2001–2275 (not consecutive; some exhibit numbers not used). Patent Owner relies, in part, on the Declaration testimony of Dr. James L. Glancey. *See* Ex. 2204[2].

Petitioner filed a Motion to Exclude evidence submitted by Patent Owner. Paper 73 ("Pet. Mot. Excl."). Patent Owner filed an Opposition to the Motion to Exclude. Paper 74 ("PO Resp. Mot. Excl."). Petitioner filed a Reply. Paper 83 ("Pet. Reply Mot. Excl.").

Patent Owner filed a Motion to Exclude evidence submitted by Petitioner. Paper 71 ("PO Mot. Excl.").[3] Petitioner filed an Opposition to the Motion to Exclude. Paper 77 ("Pet. Resp. Mot. Excl."). Patent Owner filed a Reply. Paper 82 ("PO Reply Mot. Excl.").

Ex. 1002 ¶ 2. He also has approximately twenty years of experience in the agricultural and mechanical engineering industry, working primarily on the development of precision seeding technology. *Id.* ¶¶ 3–11. Mr. Prairie is an Instructor in the Agriculture and Biosystems Engineering Department at South Dakota State University. *Id.* ¶ 11. He is a named inventor on multiple U.S. patents and applications relating to seeding and planting technology. *Id.* ¶ 12.

[2] Dr. Glancey earned degrees in Agricultural and Biological Engineering, culminating in a Doctor of Philosophy in Engineering with an emphasis in Mechanical Engineering and concentrations in Civil Engineering, Agricultural and Biological Engineering, and Applied Mathematics. Ex. 2204 ¶ 3. Currently, he holds a dual appointment at the University of Delaware as a Professor of Machine Design and Development in Mechanical Engineering and a Professor in the College of Agriculture and Natural Resources. *Id.* ¶ 4. He is an inventor on one U.S. patent related to harvesting, and three U.S. patents related to composite material manufacturing and automation. *Id.* ¶ 6. Dr. Glancey is a Registered Professional Engineer in Delaware. *Id.* ¶ 11.

[3] We cite to the redacted versions of the documents related to this Motion.

A hearing was held October 13, 2020. Paper 90 ("Tr."). This was a joint hearing that also included related cases IPR2019-01050 and IPR2019-01054.

We have jurisdiction under 35 U.S.C. § 6. We enter this Final Written Decision pursuant to 35 U.S.C. § 318(a) and 37 C.F.R. § 42.73.

Petitioner has the burden of proving unpatentability of a claim by a preponderance of the evidence. 35 U.S.C. § 316(e).

Based on the findings and conclusions below, we determine that Petitioner has *not* proven that claims 1–4, 6–11, and 13–20 are unpatentable.

We dismiss as moot both Petitioner's Motion to Exclude Evidence and Patent Owner's Motion to Exclude Evidence.

B. Real Parties in Interest

Petitioner identifies Precision Planting, LLC and AGCO Corp. as the real parties-in-interest. Pet. 6. Petitioner also states that "[f]or completeness," Petitioner also names Monsanto Co. and Bayer AG as real parties-in-interest. *Id.*

Patent Owner identifies itself, Deere & Company, as the sole real party-in-interest. Paper 5, 1.

C. Related Matters

Patent Owner sued Petitioner for infringement of the '429 patent. *See* Pet. 7; Paper 5, 1 (citing *Deere & Company v. AGCO Corporation*, Civil Action No. 1:18-cv-00827-CFC (District of Delaware June 1, 2018) (the "827 case"); *Deere & Company v. Precision Planting LLC*, Civil Action No. 1:18-cv-00828-CFC (District of Delaware June 1, 2018) (the "828 case")).[4]

---

[4] *See* Ex. 3003 (District Court's docket entry for January 9, 2019, of an "ORAL ORDER" stating that the 827 and 828 cases are "consolidated,"

Petitioner also lists the following Board proceedings as related matters:

Case No.	Challenged Patent
IPR2019-01044	U.S. Patent No. 8,813,663
IPR2019-01046	U.S. Patent No. 9,480,199
IPR2019-01047	U.S. Patent No. 9,510,502
IPR2019-01048	U.S. Patent No. 9,686,906
IPR2019-01050	U.S. Patent No. 9,807,922
IPR2019-01051	U.S. Patent No. 9,807,924
IPR2019-01053	U.S. Patent No. 9,861,031
IPR2019-01054	U.S. Patent No. 10,004,173
IPR2019-01055	U.S. Patent No. 9,699,955

Pet. 6. The listed IPR proceedings involve the same parties as this 01052 IPR proceeding. The challenged patents in the list above also are involved in the Delaware Case. *E.g.*, *see* Exs. 3005, 3006.

We note that the disclosure in the '429 patent is substantially similar to the disclosure in U.S. Patent No. 9,686,906 (the "'906 patent"), which is challenged in IPR2019-01048 (the "01048 IPR"). The drawings in the '429 patent are identical to the drawings in the '906 patent.

---

with the 827 case as "the lead case and all future filings shall be made in that case only." Accordingly, the 827 case now includes both of the entities that this Decision refers to collectively as Petitioner. For simplicity, this Decision refers to the now consolidated 827 and 828 cases as the "Delaware Case." The Delaware Case was stayed pending the outcome of this 01052 IPR proceeding and the related *inter partes* review proceedings. Ex. 3001.

D. The '429 Patent

The '429 patent relates generally to seeding machines called "planters" that are used by farmers to plant seeds in a field. Ex. 1001, 1:20–22. In a typical configuration shown below, the planter is attached to a tractor, which pulls the planter across the field. The planter includes a main hopper and many "row units" each of which takes seeds from the main hopper, places them in an auxiliary hopper, and delivers them to the ground. *Id*. at 1:26–28. An illustration of a seed planter is shown below:

Illustration of a seed planter.
See Ex. 2003 ¶ 34[5]; *see also* Ex. 1001, Fig. 1.

[5] This illustration from the complaint in the Delaware Case is an image of a "90-foot-wide John Deere DB90 planter, which covers 36 rows with each pass." Ex. 2003 ¶ 34. We provide it as an illustration of the general type and scale of the planters disclosed in the '429 patent. We make no finding,

In a typical planter configuration, the planter is attached to a tractor, which pulls the planter across a field to be planted with seeds. Ex. 1002 ¶ 34.

An annotated figure of the basic components of a typical seed planter is shown below. *See id*.

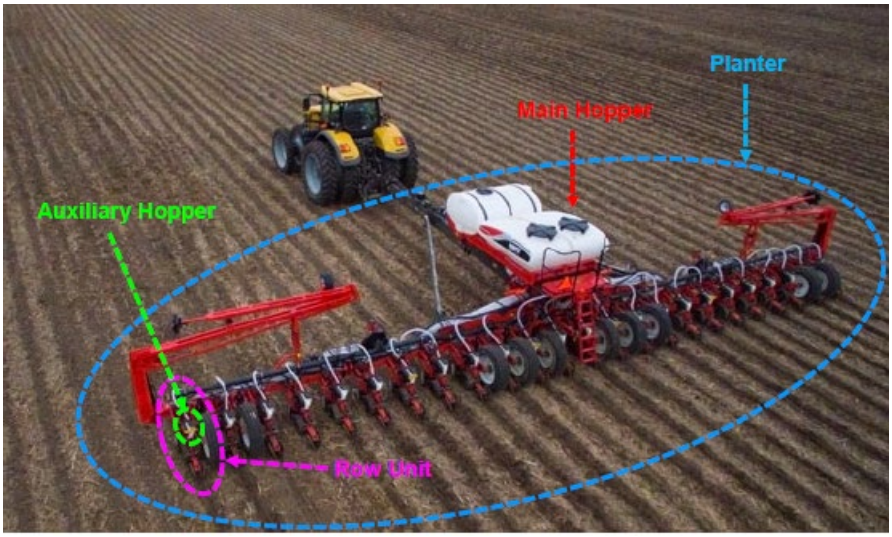

As shown above, a typical seed planter includes a main hopper, which transfers seeds to several "row units," each of which includes an auxiliary hopper and a seed delivery system that delivers, and plants, seeds into a trench or furrow in the ground. *Id.*

The most common seed delivery system used in row units is a "gravity drop system," in which seeds from the auxiliary hopper drop into a seed tube and fall by gravitational force into a seed trench. Ex. 1001, 1:52–58. One problem with this system is that the relative velocity difference between seed and soil causes individual seeds to bounce and tumble in somewhat random patterns as each seed enters the trench. Ex. 1001, 1:67–2:21. According to the Specification, the disclosed seed delivery system

---

however, whether this particular planter is within the scope of the invention claimed in the '429 patent.

provides a "controlled descent" of the seed to result in "a low or zero horizontal velocity" of the seed relative to the trench. *Id.* at 2:25–40.

According to the '429 patent, precise placement of seeds during planting is critical to producing maximum crop yield. *E.g.*, Ex. 1001, Abstract ("the seeds are isolated from row unit dynamics thereby maintaining seed spacing"); *see also* Ex. 2031 ¶ 16 ("If corn plants are spaced too close together, the plants compete for resources such as water and sunlight and neither produces acceptable quality ears. They are basically weeds. If corn plants are planted too far apart, you have lost the potential for a productive plant that yields acceptable ears.").

There is a balance between planting seeds quickly and spacing seeds precisely. Ex. 2031 ¶ 11 ("As the planter travels over the field, the uneven terrain will cause seeds to bounce and ricochet throughout its entire path of travel to the ground. This causes lack of seed spacing accuracy. The faster you travel across the field, the worse this accuracy problem becomes."); *see also* Ex. 1001, 1:65–67 ("The spacing variation is exacerbated by higher travel speeds through the field which amplifies the dynamic field conditions.").

The '429 patent relates more specifically to a "seeding machine having a seed metering system and a seed delivery system for delivering seed from the meter to the ground." Ex. 1001, 1:14–16. In the "Background of the Invention," the '429 patent explains that in known seed delivery systems, differences in how individual seeds exit the metering system and drop through the seed delivery tubes cause undesirable variations in seed spacing. *Id.* at 1:62–65 ("Undesirable variation in resultant in-ground seed spacing can be attributed to differences in how individual seeds exit the

metering system and drop through the seed tube."). In the "Summary of the Invention," the '429 patent describes that its system reduces seed spacing variability by capturing the seed, and then moving it, on a "controlled descent" from the point at which it exits the metering system to a point near the bottom of the seed trench, so that the seed is discharged at a substantially zero horizontal speed relative to the ground. *Id.* at 2:25–40.

As described in the '429 patent, and described in the related disclosure, planter or seeding machine 10 includes tool bar 12 as part of planter frame 14. Ex. 1001, 3:8–12. Mounted to the tool bar are multiple planting row units 16. *Id.* One of these row units is shown in Figure 2 of the '429 patent, reproduced below.

Figure 2 is a side view of one row unit 16. Ex. 1001, 2:46–47.

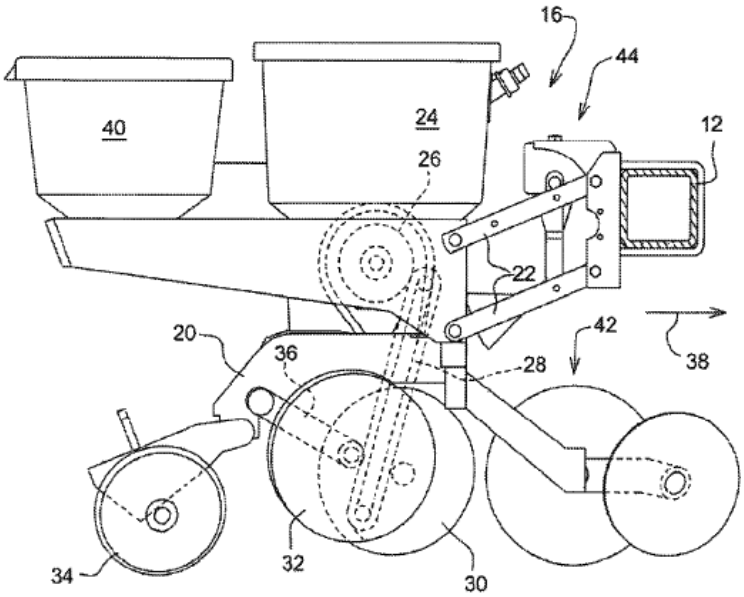

Figure 2 of the '429 patent discloses "parallelogram linkage 22 for mounting the row unit 16 to the tool bar 12 for up and down relative movement between the unit 16 and toolbar 12." Ex. 1001, 3:17–21. "Seed is stored in seed hopper 24 and provided to a seed meter 26," and "[f]rom

the seed meter 26 the seed is carried by a delivery system 28 [shown in dashed lines] into a planting furrow, or trench, formed in the soil by furrow openers 30." *Id.* at 3:21–27. Figure 3 from the '429 patent, reproduced below and annotated by Petitioner (Pet. 16) shows a more detailed side view of delivery system 28.

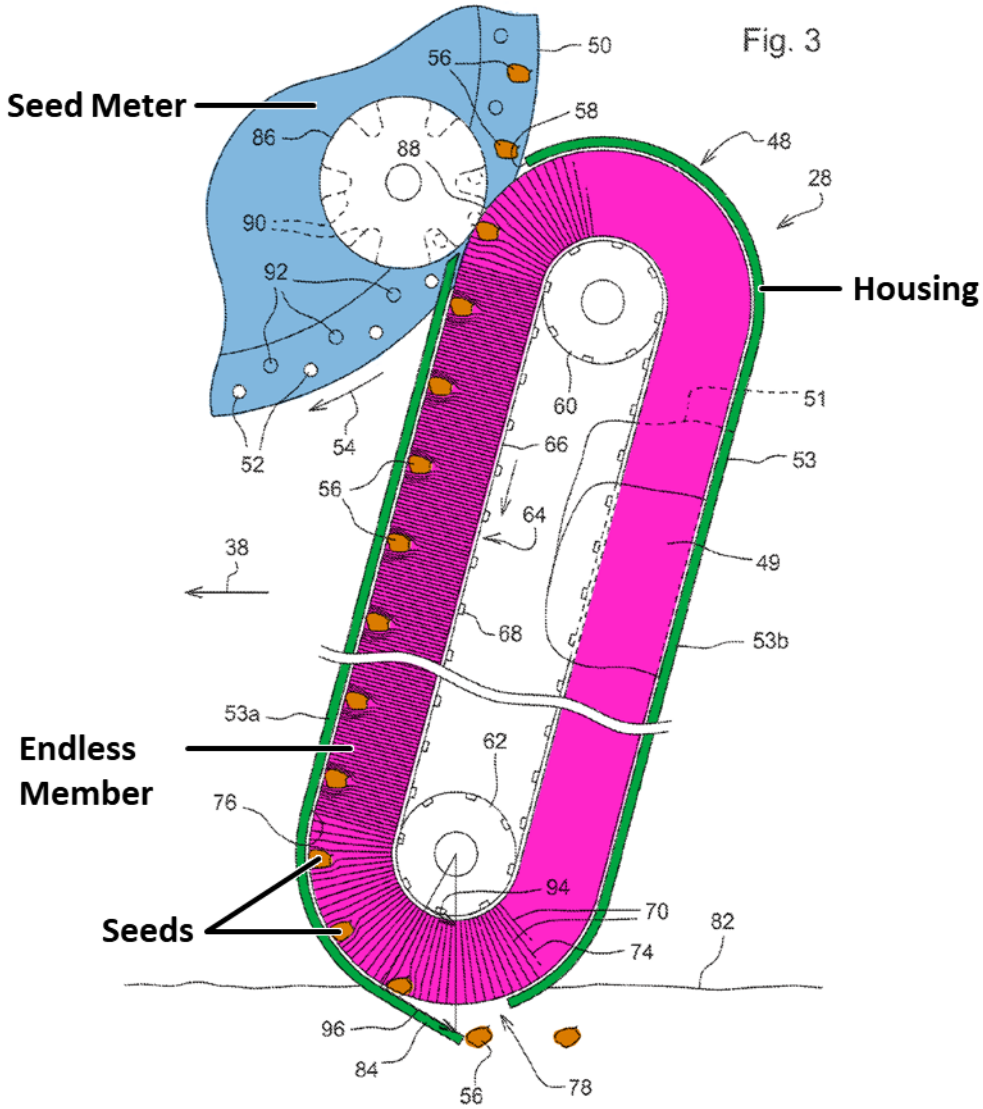

Figure 3 shows delivery system 28, with housing 48, adjacent to seed disk 50, containing apertures 52, of the seed meter. *Id.* at 3:40–51. Seeds 56 are collected on the apertures from a seed pool and adhere to the disk by air

pressure differential on the opposite sides of disk 50, which the '429 patent acknowledges is done "in a known manner." *Id.* at 3:45–47. Inside housing 48 are mounted pulleys 60 and 62, which support belt 64 for rotation within the housing. *Id.* at 3:52–57. Attached to belt 64 by base member 66 are elongated thistles 70, which touch, or are close to touching, the inner surface 76 of side wall 53. *Id.* at 3:57–64. The belt rotates in a counterclockwise direction, thus transferring seeds from the seed meter to the delivery system, where "the bristles move or convey the seeds downward to the housing lower opening" 78, holding the seeds against side wall 53 along the way. *Id.* at 4:17–37. The seeds accelerate relative to the speed of belt base member 66 as they round the lower portion of the housing on their way to the lower opening 78, and are "discharged through the lower opening 78 into the seed trench." *Id.* at 4:40–46.

Seeds 56 are removed from the seed meter and moved by the delivery system to the seed discharge point where the seed is accelerated in a rearward horizontal direction relative to the housing. *Id.* at 5:13–20. From the seed meter to the discharge, the seed travel is controlled by the delivery system, thus maintaining the seed spacing relative to one another. *Id.*

The belt shown in Figure 3 has relatively long bristles. *Id.* at 4:53. The Specification explains:

> As a result of the long bristles and the seed loading point being at the end of the curved path of the brush around the pulley 60 results in the seeds being loaded into the belt while the bristles have slowed down in speed. The bristle speed at loading is thus slower than the bristle speed at the discharge opening as the belt travels around the pulley 62. This allows in the seed to be loaded into the belt at a relatively lower speed while the seed is discharged at the lower end at a desired higher speed.

Id. at 4:53–62.

The Specification explains that while brush bristles are the preferred embodiment, other materials can be used to grip the seed, such as a foam pad, expanded foam pad, mesh pad or fiber pad. *Id.* at 7:43–47.

E. Illustrative Claims

Petitioner challenges claims 1–4, 6–11, and 13–20. Claims 1, 8, and 17 are independent claims. Independent claims 1 and 17 are directed to a "row unit for a seeding machine." Independent claim 8 is directed to a "method of delivering a seed from a seed metering member to a furrow." Claim 1 is representative and is reproduced below.

> 1. A row unit for a seeding machine having a seed metering member with a plurality of apertures through which an air pressure differential is applied to retain seed thereon, the seed metering member movable to convey seed from a seed reservoir, the row unit comprising:
>
> a housing for the seed metering member; and
>
> a seed delivery apparatus comprising
>
> a first pulley,
>
> a second pulley, and
>
> an endless member configured to be driven by the first pulley and/or the second pulley, at least a portion of the endless member positioned within the housing, wherein the endless member is positioned to move across at least one of the plurality of apertures.

F. *Prior Art and Asserted Grounds*

Petitioner contends that the challenged claims are unpatentable based on the following grounds:

Claim(s) Challenged	References	Basis of Unpatentability
1, 2, 4, 6, 7	Holdt[6] and Koning[7]	35 U.S.C. § 103(a)
3, 8, 9, 13–20	Holdt, Koning, and Holly[8]	35 U.S.C. § 103(a)
10	Holdt, Koning, Holly, and Sauder[9]	35 U.S.C. § 103(a)
11	Holdt, Koning, Holly, and Hanson[10]	35 U.S.C. § 103(a)

Pet. 9.

Petitioner also relies on the Declaration testimony of Douglas S. Prairie. *See* Exs. 1002; 1135.

II. MOTION TO EXCLUDE

Petitioner and Patent Owner each move to exclude a substantial number of exhibits on a number of different evidentiary grounds. *See* Pet. Mot. Excl.; PO Mot. Exclude. As our analysis does not rely on any of the exhibits the parties seek to exclude, we dismiss each motion as moot.

Our general approach for considering challenges to the admissibility of evidence was outlined in *Corning Inc. v. DSM IP Assets B.V.*, IPR2013-00053, Paper 66 at 19 (PTAB May 1, 2014). As stated in *Corning*, similar to a district court in a bench trial, the Board, sitting as a non-jury tribunal with administrative expertise, is well-positioned to determine and assign appropriate weight to evidence presented. *Id.* (citing *Donnelly Garment Co.*

---

[6] German Pat. No. DE2826658A1, publ. Jan. 3, 1980. Ex. 1009 ("Holdt").
[7] US 4,193,523, issued Mar. 18, 1980. Ex. 1004 ("Koning").
[8] U.S. Pub. App. No. 2006/0278726A1, publ. Dec. 14, 2006. Ex. 1029 ("Holly").
[9] U.S. Pat. No. 6,681,706, issued Jan. 27, 2004. Ex. 1007 ("Sauder").
[10] U.S. Pat. No. 4,023,509, issued May 17, 1977. Ex. 1020 ("Hanson").

v. NLRB, 123 F.2d 215, 224 (8th Cir. 1941) (stating, in the context of reviewing an administrative determination of the National Labor Relations Board based on findings by a Trial Examiner, "We think that experience has demonstrated that in a trial or hearing where no jury is present, more time is ordinarily lost in listening to arguments as to the admissibility of evidence and in considering offers of proof than would be consumed in taking the evidence proffered . . . . One who is capable of ruling accurately upon the admissibility of evidence is equally capable of sifting it accurately after it has been received . . . .")).

Moreover, "there is a strong public policy for making all information filed in an administrative proceeding available to the public." *Liberty Mut. Ins. Co. v. Progressive Cas. Ins. Co.,* CBM2012-00010, Paper 59 at 40 (PTAB Feb. 24, 2014). Rather than excluding evidence that is allegedly hearsay, confusing, misleading, untimely, and/or irrelevant, we will simply not rely on it or give it little or no probative weight, as appropriate, in our analysis, which is what we have done here.

"In an *inter partes* review, we regard it as the better course to have a complete record of the evidence to facilitate public access, as well as appellate review." *Sony Computer Entm't Am. LLC v. Game Controller Tech. LLC*, IPR2013-00634, Paper 32 at 32 (PTAB Apr. 14, 2015); *see also Gnosis S.p.A. v. S. Alabama Med. Sci. Found.*, IPR2013-00118, Paper 64 at 43 (PTAB June 20, 2014) (citing *Donnelly*, 123 F.2d at 224 ("If the record on review contains not only all evidence which was clearly admissible, but also all evidence of doubtful admissibility, the court which is called upon to review the case can usually make an end of it, whereas if

evidence was excluded which that court regards as having been admissible, a new trial or rehearing cannot be avoided.”)).

III. ANALYSIS

A. Legal Standards

Section 103(a) forbids issuance of a patent when “the differences between the subject matter sought to be patented and the prior art are such that the subject matter as a whole would have been obvious at the time the invention was made to a person having ordinary skill in the art to which said subject matter pertains.” *KSR Int’l Co. v. Teleflex, Inc.*, 550 U.S. 398, 406 (2007). The question of obviousness is resolved on the basis of underlying factual determinations, including: (1) the scope and content of the prior art; (2) any differences between the claimed subject matter and the prior art; (3) the level of ordinary skill in the art; and (4) when available, objective evidence of nonobvious, such as commercial success, long felt but unsolved needs, and failure of others. *Graham v. John Deere Co*., 383 U.S. 1, 17–18 (1966); *see KSR*, 550 U.S. at 407 (“While the sequence of these questions might be reordered in any particular case, the [*Graham*] factors continue to define the inquiry that controls.”). The Court in *Graham* explained that these factual inquiries promote “uniformity and definiteness,” for “[w]hat is obvious is not a question upon which there is likely to be uniformity of thought in every given factual context.” *Graham*, 383 U.S. at 18. We note that no objective evidence of patentability has been asserted in this proceeding.

The Supreme Court made clear that we apply “an expansive and flexible approach” to the question of obviousness. *KSR*, 550 U.S. at 415. Whether a patent claiming the combination of prior art elements would have

been obvious is determined by whether the improvement is more than the predictable use of prior art elements according to their established functions. *Id*. at 417. To support this conclusion, however, it is not enough to show merely that the prior art includes separate references covering each separate limitation in a challenged claim. *Unigene Labs., Inc. v. Apotex, Inc*., 655 F.3d 1352, 1360 (Fed. Cir. 2011). Rather, obviousness additionally requires that a person of ordinary skill at the time of the invention "would have selected and combined those prior art elements in the normal course of research and development to yield the claimed invention." *Id*.

Moreover, in determining the differences between the prior art and the claims, the question under 35 U.S.C. § 103 is not whether the differences themselves would have been obvious, but whether the claimed invention as a whole would have been obvious. *Litton Indus. Prods., Inc. v. Solid State Sys. Corp*., 755 F.2d 158, 164 (Fed. Cir. 1985) ("It is elementary that the claimed invention must be considered as a *whole* in deciding the question of obviousness."); *see also Stratoflex, Inc. v. Aeroquip Corp*., 713 F.2d 1530, 1537 (Fed. Cir. 1983) ("[T]he question under 35 U.S.C. § 103 is not whether the differences *themselves* would have been obvious. Consideration of differences, like each of the findings set forth in *Graham*, is but an aid in reaching the ultimate determination of whether the claimed invention *as a whole* would have been obvious.").

As a factfinder, we also must be aware "of the distortion caused by hindsight bias and must be cautious of arguments reliant upon *ex post* reasoning." *KSR*, 550 U.S. at 421.

Against this general background, we consider the references, other evidence, and arguments on which the parties rely.

B. Level of Ordinary Skill in the Art

The level of skill in the art is "a prism or lens through which a judge, jury, or the Board views the prior art and the claimed invention." *Okajima v. Bourdeau*, 261 F.3d 1350, 1355 (Fed. Cir. 2001). "This reference point prevents these factfinders from using their own insight or, worse yet, hindsight, to gauge obviousness." *Id.*

Factors pertinent to a determination of the level of ordinary skill in the art include: (1) educational level of the inventor; (2) type of problems encountered in the art; (3) prior art solutions to those problems; (4) rapidity with which innovations are made; (5) sophistication of the technology; and (6) educational level of workers active in the field. *Envt'l. Designs, Ltd. v. Union Oil Co. of Calif.*, 713 F.2d 693, 696–697 (Fed. Cir. 1983) (citing *Orthopedic Equip. Co. v. All Orthopedic Appliances, Inc.*, 707 F.2d 1376, 1381–82 (Fed. Cir. 1983)). Not all such factors may be present in every case, and one or more of these or other factors may predominate in a particular case. *Id*. Moreover, these factors are not exhaustive but are merely a guide to determining the level of ordinary skill in the art. *Daiichi Sankyo Co. v. Apotex, Inc.*, 501 F.3d 1254, 1256 (Fed. Cir. 2007).

In determining a level of ordinary skill, we also may look to the prior art, which may reflect an appropriate skill level. *Okajima*, 261 F.3d at 1355.

Additionally, the Supreme Court informs us that "[a] person of ordinary skill is also a person of ordinary creativity, not an automaton." *KSR*, 550 U.S. at 421.

In a one sentence statement, Petitioner proposes that a person of ordinary skill in the art "would have had either: (1) a bachelor's degree plus four years of experience in mechanical engineering, agricultural engineering,

or a related field or (2) a master's degree plus two years of experience in mechanical engineering, agricultural engineering, or a related field." Pet. 32–33 (citing Ex. 1002 ¶¶ 19–20). Mr. Prairie, Petitioner's declarant, states the factors he considered (Ex. 1002 ¶ 19) without any discussion or analysis of facts or data related to those factors, and then repeats Petitioner's asserted level of ordinary skill as his opinion of the applicable level of skill in this proceeding (*id.* ¶ 20). *See* 37 C.F.R. § 42.65(a) ("Expert testimony that does not disclose the underlying facts or data on which the opinion is based is entitled to little or no weight.").

Patent Owner proposes a slightly different level of ordinary skill. According to Patent Owner, a person of ordinary skill in the relevant technology would have had an undergraduate degree in mechanical engineering, agricultural engineering, or a closely related field, and "about two years of experience designing agricultural products or related machinery in industry or academia." PO Resp. 2 (citing Ex. 2204 ¶¶ 46–51). Patent Owner also proposes that, as an alternative, a person of ordinary skill could have had "about five years of experience designing agricultural products or related machinery, without a four-year undergraduate engineering degree." *Id.* Patent Owner adds that "[s]uch a person would typically have experience designing projects on a component or small sub-system-level rather than redesigning a larger planting system." *Id.*

Dr. Glancey, Patent Owner's declarant, explains that, in his opinion, Petitioner's proposed level of ordinary skill is "too restrictive and sets the level of ordinary skill in the art of the '429 Patent too high." Ex. 2204 ¶ 48. Dr. Glancey provides three reasons why he holds this opinion: (1) undergraduate engineering curriculums in place in February 2009 focused on

design at the freshman level and continued this focus throughout the student's degree program, thus avoiding the need for significant post-graduate design experience (*id.* ¶ 49); (2) masters programs in engineering focus on research for publication in peer-reviewed journals, rather than designing products for industry (*id.* ¶ 50); and (3) engineering technicians, who may not have formal engineering degrees, "often have years' worth of relevant hands-on experience," which, in Dr. Glancey's opinion, qualifies him or her to be "considered POSITAs[11] with respect to the '429 Patent" (*id.* ¶ 51).

At the hearing, Petitioner argued that the proposed different experience levels for a person of ordinary skill proposed by the parties "would not make a different" outcome in this proceeding. *E.g.*, Tr. 29:20–26; 30:14–18. We agree. The minor differences in the levels of skill proposed by the parties is not outcome determinative in this case.

Based on the prior art, Dr. Glancey's opinion testimony and analysis, and providing some, but minimal, weight to Mr. Prairie's opinion testimony, we determine that the evidence favors Patent Owner's proposed level of skill, primarily based on Dr. Glancey's analysis and reasons summarized above.

Accordingly, we determine that a person of ordinary skill in a technology pertinent to the challenged claims would have had an undergraduate degree in mechanical engineering, agricultural engineering, or similar field, and two years of experience designing agricultural products or related machinery, or five years of experience designing agricultural

[11] In patent jargon, a person of ordinary skill in the art is often referred to by the acronym "POSITA" or "POSA".

products or related machinery, without a four-year undergraduate engineering degree. A recipient of other academic degrees may qualify as a person of ordinary skill if they have taken coursework or have experience in the pertinent technology. Additional education could offset less work experience; additional work experience could offset less education or coursework.

C. Claim Construction

The Petition was filed on May 31, 2019. *See* Paper 8. This filing date is after the Patent and Trademark Office implemented a rule on claim construction adopting the same claim construction standard that would be used to construe the claim in a civil action under 35 U.S.C. § 282(b). *See* Changes to the Claim Construction Standard for Interpreting Claims in Trial Proceedings Before the Patent Trial and Appeal Board, 83 Fed. Reg. 51,340 (Oct. 11, 2018) (amending 37 C.F.R. § 42.100(b) effective November 13, 2018) (now codified at 37 C.F.R. § 42.100(b) (2019). The claim construction standard used in a civil action under 35 U.S.C. § 282(b) is generally referred to as the *Phillips* standard. *See Phillips v. AWH Corp.*, 415 F.3d 1303 (Fed. Cir. 2005) (en banc). This rule applies to all petitions filed on or after the effective date. 83 Fed. Reg. 51,340. Thus, the new claim construction rule applies to this proceeding.

Under the *Phillips* standard, words of a claim generally are given their ordinary and customary meaning. *Phillips*, 415 F.3d at 1312. "[T]he ordinary and customary meaning of a claim term is the meaning that the term would have to a person of ordinary skill in the art in question at the time of the invention." *Id*. at 1313. Importantly, the person of ordinary skill in the art is deemed to read the claim term not only in the context of the

particular claim in which the disputed term appears, but in the context of the entire patent, including the specification. *Phillips*, 415 F.3d at 1313.

Petitioner submits that no terms need to be specifically construed for purposes of resolving the issues raised in the Petition. Pet. 30–31. Although taking this position in this proceeding, we note that Petitioner provides an extensive analysis of the claim term "endless member." *See id.* at 31–32, n.7, n.8.

Patent Owner notes that the District Court in the Delaware Case construed the terms "endless member," "seed delivery apparatus," and "Method of delivering seed." (PO Resp. 3 (emphasis omitted) (citing Ex. 1038)). The District Court construed "endless member" to mean "a continuous conveyor forming a loop, such as a belt or a chain." Ex. 1038, 2. The District Court construed "seed delivery apparatus" to mean an apparatus "that removes seed from the seed meter by capturing the seed and then delivers it to a discharge position." *Id.* at 3. The District Court construed "method of delivering a seed" to mean a method "that removes seed from the seed meter by capturing the seed and then delivers it to a discharge position." *Id.* The Court's Order states its conclusions on claim constructions without any discussion or analysis. *See* Ex. 1038.

Patent Owner proposes specific construction for (1) the word "sweep." (PO Resp. 3–6), (2) the phrase "sweep across the seed metering member" (*id.* at 6–8), and (3) the phrase "move across at least one of the plurality of apertures" (*id.* at 8).

"[W]e need only construe terms 'that are in controversy, and only to the extent necessary to resolve the controversy.'" *Nidec Motor Corp. v. Zhongshan Broad Ocean Motor Co. Ltd.*, 868 F.3d 1013, 1017 (Fed. Cir.

2017) (quoting *Vivid Techs., Inc. v. Am. Sci. & Eng'g, Inc.*, 200 F.3d 795, 803 (Fed. Cir. 1999)). We determine that an explicit construction of the claims is not necessary for the purposes of determining whether Petitioner has shown that the challenged claims are unpatentable based on the record before us.

D. Grounds 1–4

Petitioner asserts that claims 1–4, 6–11, and 13–20 of the '429 patent would have been obvious based on four different combinations of five references. Pet. 9.

Patent Owner takes a different view of Petitioner's asserted unpatentability. According to Patent Owner, Petitioner relies on "hindsight" to support its motivation to combine the asserted references and also asserts that there is no reasonable expectation of success (*e.g.*, PO Resp. 21–25; Sur-Reply 15); Koning is "non-analogous art." (*e.g.,* PO Resp. 18–21; Sur-Reply 11); Petitioner should be estopped from contending that Koning is *not* non-analogous art (*e.g.*, PO Resp. 11–15; Sur-Reply 33–36); and objective evidence "confirms nonobviousness" (PO Resp. 62–104; Sur-Reply 2–11).

Holdt and Koning are fundamental to each of the four asserted grounds.[12] *Id.* In each of the four asserted Grounds, Petitioner asserts that it

[12] In footnote 8 of the Petition, Petitioner states the '429 patent "discloses an 'endless member' as a brush belt with bristles, or belt with other materials, that grip the seed." Petitioner then asserts that "[s]hould the Patent Owner argue that an 'endless member' is broader, and includes other types of endless belts, such as flighted belts or belts with cells, then [the challenged claims of the '429 patent] are unpatentable . . . either with or without Koning's brush belt and in combination with the additional secondary references identified in each ground." Pet. 45–46, n.8. Petitioner, however, has not addressed in substantive detail the speculative possibility of unpatentability without Koning as a reference in this proceeding.

would have been obvious to replace "Holdt's cellular belt with Koning's brush belt in order to achieve the known benefits of finer seed spacing." *See*, Pet. 49 (in the context of independent claim 1); *id.* at 77 (in the context of independent claim 8 – "When Holdt's cellular belt is replaced with Koning's brush belt, the combined teachings disclose conveying the seed via the endless member (Koning's brush belt) along an interior of a housing"); *id.* at 83 (in the context of independent claim 17 – "the combination of Holdt and Koning renders obvious a seed delivery apparatus (Koning's brush belt in Holdt's housing) having an endless belt (Koning's brush belt)"); *see also* Tr. 16:21–24 (counsel for Petitioner explaining that in the asserted Grounds "In the combination, the Holdt Finned Belt is replaced with the Koning Brush Belt").

According to Petitioner, the reason why the proposed change would have been obvious is that "a POSITA seeking to maximize control over the seed would have been motivated to combine the teachings of Holdt and Koning by replacing Holdt's cellular belt with Koning's brush belt to achieve the disclosed benefits of finer control over seeds and seed spacing. Pet. 44 (citing Ex. 1002 ¶ 85). Petitioner explains that, in the proposed "combined teachings of Holdt and Koning," when Koning's brush belt is substituted for Holdt's cellular belt, "Koning's brush belt would, in turn, move across the seed meter to capture the seeds from the cylinder and hold the seeds in place with respect to each other as it delivers the seeds to the

---

Accordingly, unpatentability based on Grounds *without* relying on Koning's brush belt is not before us. *See*, Tr. 24:9–17 (stating "we have argued just grounds that include Koning," . . . "we've only advanced grounds that include Koning," . . . "[b]ut the only grounds we put forth, to be very clear, is the grounds with Koning.").

ground." *Id.* (citing Ex. 1002 ¶ 86). Mr. Prairie's cited Declaration testimony repeats Petitioner's arguments.

Our analysis below focuses solely on the use of Koning's brush belt in the proposed combination of references. Because this issue is dispositive of Petitioner's challenge, it is unnecessary for us to resolve other disputed issues. *See, e.g.*, *Adidas AG v. Nike, Inc.*, 963 F.3d 1355, 1359–60 (Fed. Cir. 2020) (affirming Board's determination that claims were not shown to be obvious because the petitioner had not demonstrated that an ordinarily skilled artisan would have been motivated to combine the references, and not reaching other issues).

We first look to the scope and content of the applicable prior art, which in this instance includes Holdt and Koning.

1. Holdt (Ex. 1009)

We make the following findings of fact concerning Holdt.

Holdt is the English translation of a published German patent application (Ex. 1010 is the German language application). Holdt discloses "a seed drill for cereals and other seed varieties." Ex. 1009, 6:1–2. Holdt recognizes that some seed drills provide irregular seed distribution when planting seeds. *Id.* at 6:21–7:12. Holdt also recognizes that some seed drills, such as those used for corn and beet seeds, "operate according to the principle of uniformly spaced sowing." *Id.* at 7:13–15. This principle means that "each seed grain" is "individually deposited in a targeted manner in the ground." *Id.* at 7:15–18. Holdt discloses the substantial advantages of "uniformly spaced sowing," which include increased yield," better weed suppression, and higher crop density. As stated in Holdt:

> It is known that the uniformly spaced sowing leads to an increase in yield. A high level of field emergence is achieved. Since the

> individual plants are uniformly distributed across the area an early establishment takes place such that weeds are better suppressed than is the case in drill sowing. Finally, a higher crop density can also be achieved in the case of uniformly spaced sowing. All of the advantages of the uniformly spaced sowing can be explained by way of the reduced mutual competition of the plants and the potential of expansion toward all sides thus provided.

Ex. 1009, 7:26–8:3. The device disclosed in Holdt "is suitable for spreading cereals and other seed varieties, for example rapeseed, vetches, sunflowers, beet, corn, broad beans, etc. according to the principle of "uniformly spaced sowing." *Id.* at 9:19–24.

Petitioner provides the following annotated Figure 2 from Holdt.

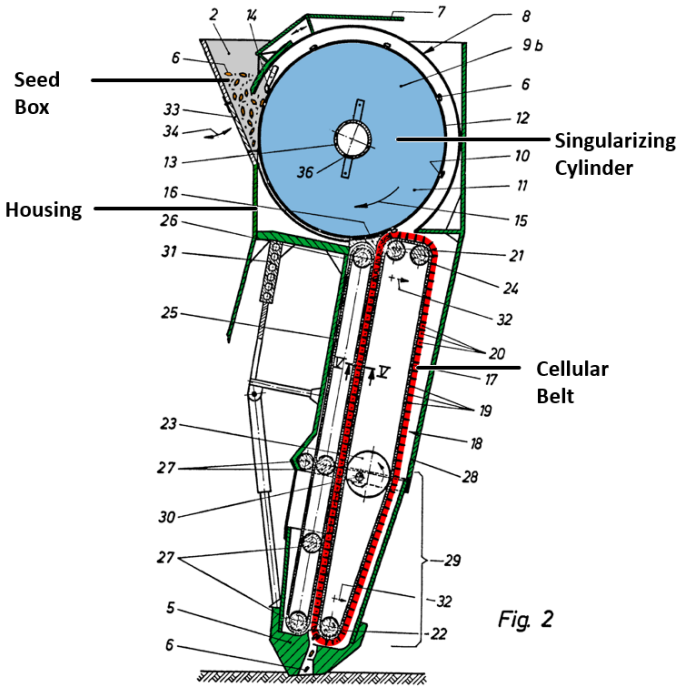

Patent Owner provides its own annotated Figure 2 from Holdt. We provide Patent Owner's version below to show the common understanding by the parties of the structure, function, and terminology of Holdt.

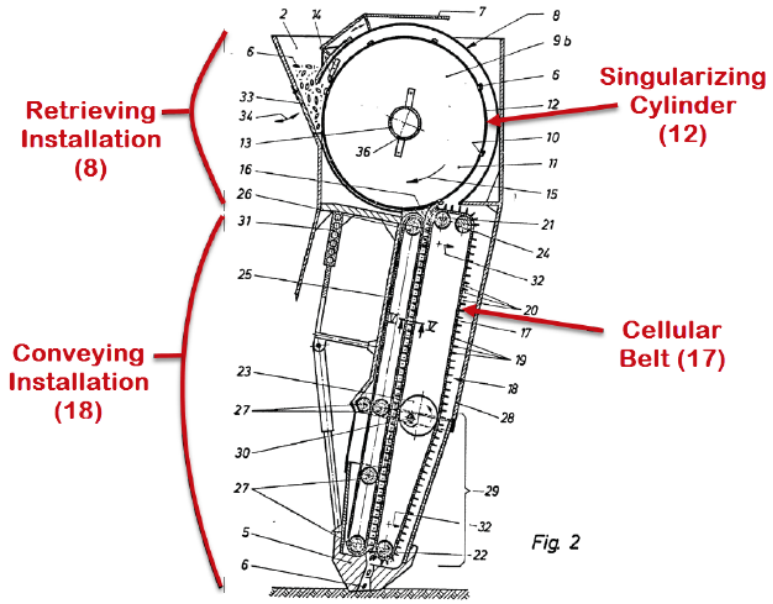

The seed drill disclosed in Holdt includes a frame on which seed box or hopper 2 is disposed. Ex. 1009, 14:3–5. A multiplicity of "retrieving installations 3" (*see* Figure 1) or row units are connected to seed box 2. *Id.* at 14:5–7. Each retrieving installation 3 "transitioning to conveying installations 4 which in turn each terminate in a share 5 which when sowing penetrates the ground." *Id.* at 14:7–10.

A multiplicity of "retrieving installations 8,"[13] which have two disks 9a and 9b are connected, as can be seen in Figures 3 and 4. *Id.* at 14:20–23. Holes 10 are disposed on the circumference of the disk 9b. Interior 11 of singularizing cylinder 12 formed by the two disks 9a and 9b is connected to a vacuum source by way of axle 13 of singularizing cylinder 12, which fills holes 10 with seeds. *Id.* at 14:23–29.

[13] Holdt refers to the "receiving installations" using both reference numeral 3 (Ex. 1009, 14:6) and reference numeral 8 (*id.* at 14:21). The structure and function of the "receiving installations" is not a point of confusion or dispute between the parties.

Individual seeds 6 are retained on the circumference of singularizing cylinder 12 by a vacuum. Ex. 1009, 14:31–33. Seeds 6 are then deposited on "cellular belt" 17, which is part of "conveying installation" 18.[14] *Id.* at 15:1–3.

Belt 17 includes "webs" 19 that form "cells" 20, which retain "a seed." *Id.* at 15:3–5. The speed of "retrieving installation" 8 and "conveying installation" 18 are coordinated so that one seed is placed into each cell 20. *Id.* at 15:7–10. Cellular belt 17 terminates in "share" 5 where the seeds are dispensed into the seed furrow. *Id.* at 15:16–18. Belt 17 and cells 20 are adjustable to accommodate seeds of different sizes. *Id.* at 15:26–31.

After singularizing cylinder 12 retrieves seed from the seed reservoir (seed box 2) (*id.* at 14:11-33), the cylinder rotates "such that the seed grains ultimately make their way into the region of a wedge 16 where [they] are acquired by a cellular belt 17 which is associated with the conveying installation 18." *Id.* at 14:33–15:10. Then, the seeds are transferred from the cylinder 12 to cells 20 formed between webs of the cellular belt. *Id.* at 15:3-10 ("The cellular belt 17 has webs 19 and thus forms cells 20 which are in each case populated by a seed grain 6."). Cellular belt 17 rotates counterclockwise around pulleys (rollers 21–24) to deliver the seeds to the ground. *Id.* at 15:11–18.

Holdt describes cellular belt 17 moving across seed disk 9 and removing seeds "directly" from the singularizing cylinder. *Id*. at 11:5–9. As

[14] Holdt uses reference numerals 4 and 18 to refer to "conveying installations." *Compare* Ex. 1009, 14:8, *with* 15:3. Again, this has not caused confusion or dispute between the parties.

disclosed in Holdt, "[t]his enables a more precise transfer of the individual seed grains from the singularizing installation [12] to the conveying installation [17]" and provides "higher potential operating speeds." *Id*. at 11:9–15.

2. Koning (Ex. 1004)

We make the following findings of fact concerning Koning.

Koning discloses a planting machine for potatoes, bulbs or similar seed crop. Ex. 1004, 1:5–17. The objective of the disclosed planting machine is to ensure a particularly uniform distribution of the seed crop, even if the seed crop has different sizes and if the shape of the seed crop is irregular. *Id.*

Figure 2 of Koning, reproduced below, shows one embodiment of the claimed planting machine.

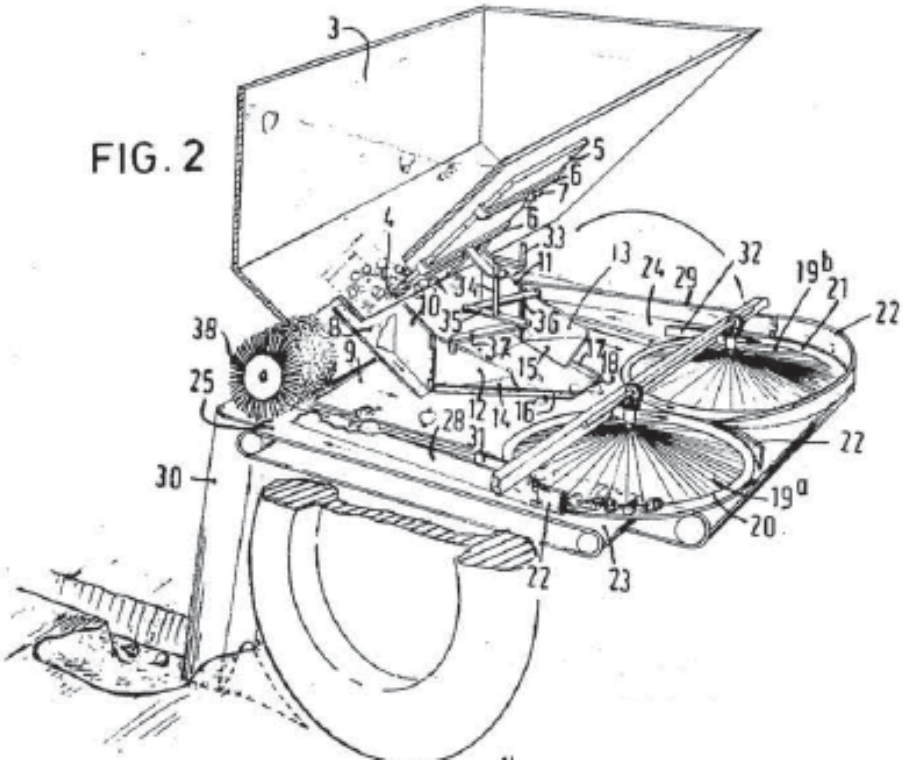

As shown in Figure 2, the planting machine generally includes hopper 3, conveying member 23, flat belt 25, and planting foot 30 at the "delivery end" of conveying member 23, and "rollers 38 provided with brush hair" to provide "a uniform feed of seed crop." *Id.* at 3:44–4:21, 4:37–41, 4:68–5:2.

Figure 4 of Koning, annotated by Petitioner (Pet. 43) and reproduced below, discloses a side view of a different embodiment of a planting machine, on which Petitioner relies.

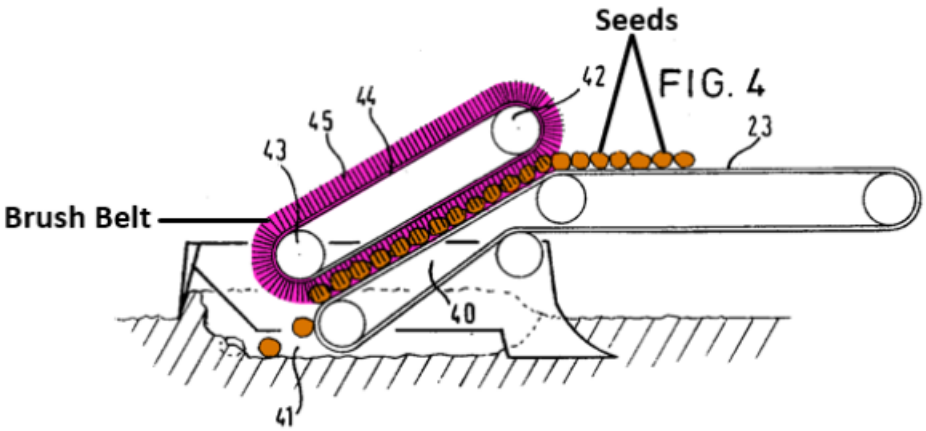

Figure 4 of Koning discloses conveying member 23 having a portion or part 40 thereof that extends in a backward direction to a point in furrow 41. *Id.* at 5:3–6. Belt 44 is above part or portion 40 of conveying member 23, is guided around rollers 42 and 43, and includes brush hairs 45. Ex. 1004, 5:6–8. Koning makes clear that it is brush hairs 45 of belt 44 that hold the seed crop on part 40 of belt or conveying member 23, so that the seed crop delivered by the conveying members are delivered at "the same distance in relation to each other in the furrow 41." *Id.* at 5:8–14. Thus, in Koning, it is the combination of two belts or conveying members, belt 44 with brush hairs 45, *and* belt 23 that function together to convey seeds to furrow 41. *Id.* at 5:11–14.

3. Independent Claim 1

Petitioner provides a clause-by-clause analysis of each recited element in independent claim 1 asserting where each claimed element and limitation[15] is shown in the cited references. *E.g., see generally*, Pet. 33–60 (discussing claim 1, Ground 1). Throughout this analysis, Petitioner cites the declaration testimony of Mr. Prairie for evidentiary support.

As we explain below, Petitioner fails to meet its burden of proving the claimed invention as a whole would have been obvious because there is no persuasive evidence of a rationale why a person of ordinary skill would stitch together various pieces of Holdt and Koning, as proposed by Petitioner. As stated in *KSR*, "a patent composed of several elements is not proved obvious merely by demonstrating that each of its elements was, independently, known in the prior art." *KSR*, 550 U.S. at 418. This is so because "inventions in most, if not all, instances rely upon building blocks long since uncovered, and claimed discoveries almost of necessity will be combinations of what, in some sense, is already known." *Id.* at 418–419. This is not a new concept in the law. *See, e.g., Raytheon Co. v. Roper Corp.*, 724 F.2d 951, 961 (Fed. Cir. 1983) (Markey, C.J.) (". . . virtually every claimed invention is a combination of old elements") (citations omitted).[16]

---

[15] Petitioner labels these clauses "Elements" 1[a–e]

[16] As Judge Markey summarized this statutory principle of patent law,

> The question is not, or never should be, whether all of the elements in the combination are old. Only God works from nothing. Man must work with old elements. The question should be whether the combination itself is patentable. The *statute,* 35 USC §103**,** says the invention must be considered 'as a whole,' making totally irrelevant the age of the elements in the invention.

Petitioner acknowledges that the dispositive issue in this case is similar to the dispositive issues in the related IPR proceedings that relied on Koning and Hedderwick. *See* Tr. 9:20–21 ("So Holdt, like the Hedderwick reference that is at issue in some of the other IPRs[17], and as in the prior hearing, uses a Finned Belt."); *see also id.* at 45:6–11 (counsel for Patent Owner stating "in all cases . . . their proposed combination relies on the notion of replacing the conveyor belt that existed in either Hedderwick or Holdt, the flighted conveyor, and replacing it with a Brush Belt from Koning").

Petitioner asserts a person of ordinary skill "seeking to maximize control over seed delivery spacing" would have been motivated to replace Holdt's cellular belt with Koning's brush belt "in order to achieve the known benefits of finer seed spacing." Pet. 49 (citing Ex. 1002 ¶ 93). Mr. Prairie's Declaration testimony supports Petitioner's arguments. Ex. 1002 ¶ 93; *see also id.* ¶ 65 ("Koning explains that using a brush belt to deliver seeds provides the benefit of ensuring the regular distribution of seeds by holding seeds while they are delivered 'till the very last moment.'").

Mr. Prairie testifies that Koning "ensures a particularly uniform distribution of the seed potatoes or the like." Ex. 1002 ¶ 65 (citing Ex. 1004, 3:12–22). Mr. Prairie opines that Koning achieves uniform spacing because "the brush belt ensures that the 'velocity' of the seeds 'in relation to each

---

Howard T. Markey, *Why Not the Statute* 65 J. Pat. Off. Soc'y 331, 334 (1983).

[17] *See* IPR2019-01044; 01046; 01048; 01050; 01051; 01053; 01054; 01055, each of which asserts unpatentability based on replacing the "finned belt" of Hedderwick (U.K. Pat. Appl. GB 2,057,835 A, published April 8, 1981, Ex. 1003 in this 01052 proceeding) with the "brush belt" of Koning.

other is completely defined' and, as a result, that the seeds are planted 'the same distance in relation to each other in the furrow.'" *Id.* ¶ 67 (citing Ex. 1004, 3:12-22). It is Mr. Prairie's opinion that a "a person of ordinary skill in the art seeking finer control over seeds as they are conveyed down to the furrow would realize that adding Koning's brush belt to Holdt's system would provide certain benefits that further Holdt and Koning's common goal of achieving accurate seed spacing." *Id.* ¶ 65.

Petitioner makes clear that it "[does] not rely on Holdt alone to disclose the claimed seed delivery apparatus because [Holdt] allows gravity to impact the movement of the seeds." Pet. 42. Petitioner explains that Holdt "describes a belt with 'cells' in which seeds may move as they are transferred to the ground. *Id.* (citing Ex. 1009, 15:3-18). Petitioner asserts that "Koning discloses a *system* that uses a brush belt with bristles (as opposed to Holdt's cellular belt) to hold seeds . . . stationary with respect to each other as they are delivered to the ground so that they are planted in the furrow at a reliably uniform spacing." *Id.* at 42–43 (emphasis added).

As we explained above, Koning's *system* includes both belt 44 (with bristles 45) *and* belt 23 cooperating together to convey seeds. There is no suggestion in Koning that belt 44 would or could function without belt 23.

Petitioner concludes that a person of ordinary skill "seeking to maximize control over the seed would have been motivated to combine the teachings of Holdt and Koning by replacing Holdt's cellular belt [belt 17] with Koning's brush belt [*i.e.*, belt 44 with brush hairs 45] to achieve the disclosed benefits of finer control over seeds and seed spacing." Pet. 44. Thus, it is clear that Petitioner's asserted basis of unpatentability is to

replace endless belt 17 of Holdt with Koning's brush belt 44 with brush hairs 45[18]. *Id.*

Petitioner summarizes its view of how Holdt, as modified by Koning, would function, as follows:

> Holdt's seed meter (singularizing cylinder 12) would rotate to transfer individual seeds to the region where they would have been transferred to the cellular belt. At this region, when Koning's brush belt is substituted for Holdt's cellular belt, Koning's brush belt would, in turn, move across the seed meter to capture the seeds from the cylinder and hold the seeds in place with respect to each other as it delivers the seeds to the ground.

Pet. 44 (citations omitted).

As part of its rationale for the proposed combination of references, Petitioner asserts:

> Both references are in the same field—agricultural seed planting—and describe straightforward and well-known mechanical systems that take seeds from a hopper and deliver them to the ground. Both references identify the same problem

[18] Although the parties, and thus the Board, focus on whether it would have been obvious to modify Holdt with the brush belt of Koning, the challenged independent claims, and most of the challenged dependent claims do *not* include the term "brush belt." Dependent claims 7, 16, and 18 specifically state that the endless belt is "in the form of a bristle belt" (claims 7 and 16) or "is in the form of a brush" (claim 18). We do not hold, and this Decision should not be understood to suggest, that the "endless member" claim term in the '429 patent requires a brush belt. The challenge Petitioner asserts, however, is to replace the endless belt of Holdt with Koning's brush belt, so that is the challenge we must evaluate. *See SAS*, 138 S. Ct. at 1356 ("the petitioner's petition . . . is supposed to guide the life of the litigation," and it would "not be proper for the Board to deviate from the grounds in the petition and raise its own obviousness theory."); *Koninklijke Philips N.V. v. Google LLC*, 948 F.3d 1330, 1336 (Fed. Cir. 2020) (quoting *SAS*, 138 S. Ct. at 1356) ("the Board does not 'enjoy[] a license to depart from the petition and institute a *different* inter partes review of [its] own design.'").

> in the prior art—suboptimal seed spacing. And both references solve this problem by using components to increase control over the movement of seeds as they are delivered to the ground. Indeed, Koning specifically discloses the benefits of using its brush belt—finer control of seed spacing—in a seed planting system such as described in Holdt.
>
> Both references discuss the importance of controlling the movement of seeds as they travel to the ground to ensure uniform spacing.

Pet. 26–27 (citations omitted).

Petitioner also asserts that "[i]ncorporating the teaching of Koning's brush belt into Holdt's row unit would be simple for a POSITA to implement and would merely require applying a known technique to a known device. *Id.* at 28. Petitioner, however, cites no persuasive evidence to support this argument.

According to Petitioner, the reason why a person of ordinary skill would have combined the disclosures of Holdt and Koning would have been "to obtain finer control over seed placement." *Id.*

a) Motivation to Combine and Reasonable Expectation of Success

Of the many disputed issues summarized in the preceding section, our analysis focuses on whether an ordinarily skilled artisan would have been motivated to combine the references in the manner Petitioner proposes, and would have reasonably expected success in doing so. We focus on the use of Koning's brush belt in the proposed combination of references. Because this issue is dispositive of Petitioner's challenge, it is unnecessary for us to resolve the other disputed issues. *See, e.g.*, *Adidas AG v. Nike, Inc.*, 963 F.3d 1355, 1359 (Fed. Cir. 2020) (affirming Board's determination that claims were not shown to be obvious because the petitioner had not demonstrated that an ordinarily skilled artisan would have been motivated to

combine the references); *Samsung Electronics Co. v. Elm 3DS Innovations*, LLC, 925 F.3d 1373, 1383 (Fed. Cir. 2019) (determining that it unnecessary to reach other issues when reasonable expectation of success is dispositive).

Because the proposed combination as Petitioner chose to frame it includes seeds being deposited from the seed meter into Koning's "delivery system," which, according to Petitioner, is a moving brush belt, it is incumbent on Petitioner to show that an ordinarily skilled artisan would have been motivated to combine the references in that proposed manner and would have reasonably expected success in doing so. *See Adidas*, 963 F.3d at 1359–60; *Samsung*, 925 F.3d at 1382–83. The Federal Circuit has made clear that a satisfactory explanation of "*how* the combination of the . . . references [is] supposed to work" is necessary to support "a conclusion that a relevant skilled artisan would have been motivated to make the combination and reasonably expect success in doing so." *Personal Web Techs., LLC v. Apple, Inc.*, 848 F.3d 987, 994 (Fed. Cir. 2017) (emphasis in original).

In determining whether there would have been a motivation to combine prior art references to arrive at the claimed invention, it is insufficient to simply conclude the combination would have been obvious without identifying any reason *why* a person of skill in the art would have made the combination. *Metalcraft of Mayville, Inc. v. The Toro Co.*, 848 F.3d 1358, 1366 (Fed. Cir. 2017). "The question is not whether the various references separately taught components of the [ ] Patent formulation, but whether the prior art suggested the selection and combination achieved by the [ ] inventors." *Orexo AB v. Actavis Elizabeth LLC*, 903 F.3d 1265, 1273 (Fed. Cir. 2018).

As asserted by Patent Owner, "Koning's [brush] belt does not convey seeds; it merely "***hold[s] the potatoes lying on the conveying members 23***." PO Resp. 23 (citations omitted). Patent Owner further explains that "[f]undamentally, *Koning's [brush] belt*, which is intended to steady potatoes while they are conveyed, *is not a conveyor belt*. Instead, it is a moving belt positioned over top of the potatoes not intended to support the weight of those objects." *Id.* at 23–24 (emphasis added). Dr. Glancey testifies that

> Fundamentally, Koning's belt, which is intended to steady potatoes while they are conveyed down an incline, is not a conveyor belt. Instead, it is a moving belt positioned over top of the potatoes not intended to support the weight of those objects. A POSITA reading Koning would learn that a brush belt might be useful in a planting device that handles relatively massive objects (such as potatoes or bulbs) as a covering element for those objects as they are being conveyed by another, separate component . . . . However, the POSITA does not learn from reading Koning to use a belt with brush hairs as the sole means of supporting or conveying a seed, especially the relatively small seeds exemplified in Holdt.

Ex. 2204 ¶ 147.

Dr. Glancey opines, with supporting data and analysis, that conveying member 23 in Koning "supports about 87% of the seed potato weight in the orientation taught by Koning." Ex. 2204 ¶ 141. He concludes that "it is clear from this proof that the Koning belt with brush hairs cannot and does not support the weight of the seed potatoes being conveyed to the soil." *Id.*

Additionally, Patent Owner asserts:

> Koning does not suggest using a brush-belt for retaining and conveying seeds without a separate conveying member to bear their weight. A POSA would not predict that such a belt could be used successfully for that purpose because, *inter alia*, a POSA

> would not predict that such a belt would successfully receive, retain or convey small seeds on its own due to the unique and unpredictable dynamics of such a belt.

PO Resp. 23 (citing Ex. 2204, ¶¶ 146–148).

Dr. Glancey, Patent Owner's expert declarant, testifies that "[a] POSITA would not have isolated Koning's belt with brush hairs from Koning's other teachings for combination with other non-analogous systems, because Koning's [brush] belt was not—and was not taught as being—a modular 'off the shelf' component with predictable uses." Ex. 2204 ¶ 138. Dr. Glancey further explains, "[a] POSITA reviewing Koning's disclosure of using a belt with brush hairs to cover and hold potatoes conveyed on a separate conveying surface could not predict that such a belt would successfully receive, retain or convey small seeds on its own as would be required in Petitioners' proposed combination." Ex. 2204 ¶ 140. Dr. Glancey provides an analysis of why he reaches this conclusion:

> the properties of brush belts, especially belts moving at speeds corresponding to seed dispensing rates common for such small seeds, make it unlikely that seeds will enter the belt in the absence of a loading surface especially adapted to insert the seeds into the belt, and nothing in Koning's disclosure suggests using a belt with brush hairs to support the entire weight of the seeds or to convey them without the presence of a separate conveying member.

Id. Dr. Glancey also concludes that "[a] POSITA would not have been motivated to isolate Koning's belt with brush hairs, remove it from Koning's planting machine, adapt it for use in completely different system, and repurpose it to perform a new and undisclosed function (as a conveyor), as proposed by Petitioners." *Id.* ¶ 143. According to Dr. Glancey's testimony,

> A device such as Koning's [brush] belt that *covers* from above relatively massive seed objects such as potatoes is not the same

> as a device such as Holdt's cellular belt which alone *carries* smaller seeds. The only evidence I have seen to suggest that a POSITA would use a brush belt for carrying seeds rather than covering them is the '429 Patent.

Id. ¶ 150.

Additionally, Patent Owner asserts that the complex fluid-like dynamics of moving brush hairs are not readily adaptable to *carrying* small objects. PO Resp. 34–42 (citing Ex. 2204 ¶¶ 174–177, 182–189).

Neither the references, other evidence, nor Mr. Prairie provide sufficiently persuasive evidence, even in combination, to establish why a person of ordinary skill would have modified Holdt by (1) selectively gleaning only a *portion* of Koning's conveying system, i.e., belt 44 with bristles 45, (2) selectively excluding Koning's belt 23, and then (3) modifying Koning's brush belt by reversing its orientation to change its fundamental purpose so that it *carries* seeds deposited into the bristles, as in the '429 patent, rather than *covering and guiding* seeds carried by a separate and distinct conveyor belt, as in Koning. *See WBIP, LLC v. Kohler Co.*, 829 F.3d 1317, 1327 (Fed. Cir. 2016) (finding an absence of a motivation to reverse parts to an orientation that was "*totally backwards*" from what one of skill in the art would even attempt). Petitioner's arguments do not acknowledge the different function of Koning's brush belt, or explain why a person of ordinary skill would have been motivated to adapt Koning's brush belt to such a use and reasonably expect success in doing so.

Petitioner asserts that, in the proposed combination of Holdt and Koning, "Holdt's seed meter (singularizing cylinder 12) would rotate to transfer individual seeds to the region where they would have been transferred to the cellular belt." Pet. 44 (citing 14:24–15:3). According to

Petitioner, "[a]t this region, when Koning's brush belt is substituted for Holdt's cellular belt, Koning's brush belt would, in turn, move across the seed meter to capture the seeds from the cylinder and hold the seeds in place with respect to each other as it delivers the seeds to the ground." *Id.* (citing Ex. 1004, 3:12–22, 5:8–14; Ex. 1002 ¶ 86). Petitioner also asserts that Holdt's wedge 16 "would then push the seed directly into the [bristles of Koning's brush] belt." Tr. 16:21–24; *see also, id.* at 17:8–11 (". . . our proposed combination with the Holdt Seed Meter, the Wedge, and the Koning Brush Belt where you can see the seed that we've identified is rotating, being pushed right into the Koning Brush Belt.").

Brush hairs 45 of belt 44 in Koning *do not* remove seed from a seed meter by capturing seeds, as recited in all the challenged claims. *See* PO Resp. 47–48 (citing Ex. 2204 ¶¶ 219–221). And, the seed meter of Holdt does not push seeds into a brush belt. Moreover, as we have discussed above, there is no persuasive evidence why a person of ordinary skill in the relevant technology would have selected only a *portion* of Koning's conveying system, i.e., belt 44 with bristles 45, would have excluded Koning's belt 23, and would have then reversed the orientation of Koning's belt 44 so that it *carries* seeds deposited into the bristles, as in the '429 patent, rather than *covering and guiding* seeds carried by a separate and distinct conveyor belt, as in Koning.

We determine Petitioner fails to meet its burden of providing a sufficiently persuasive explanation or reason for concluding that one of skill in the art would have combined these particular references to produce the claimed invention. "Without any explanation as to how or why the references would be combined to arrive at the claimed invention, we are left

with only hindsight bias." *Metalcraft*, 848 F.3d at 1367. "[W]e cannot allow hindsight bias to be the thread that stitches together prior art patches into something that is the claimed invention." *Id*.

The existence of common elements found in both the challenged claims and the references relied on by Petitioner does not establish that the challenged claims would have been obvious.

The persuasiveness of Mr. Prairie's testimony—i.e., that an ordinarily skilled artisan could have adapted Koning's brush belt for use in the proposed combination, where seeds are deposited onto the brush belt from above—is undermined by his testimony that he "can't recall a time where I've seen a seed being dropped into a brush belt." Ex. 2193, 113:5–9.

During his deposition, Mr. Prairie resisted agreeing that the potatoes are lying on the conveyor in Koning, testifying that he takes from Koning's description that "they are captured within the belt with brush hairs. And that there is some weight that's along the conveying member 23." Ex. 2193, 96:24–99:25. Mr. Prairie testified that he "do[es]n't believe the brush hairs support the full weight of the potatoes," but that Koning did not provide him sufficient information to answer whether the conveying member supports the majority of the weight of the potatoes. *Id.* at 106:22–107:21. In our view, it is clear from Koning's description that the potatoes lie on the conveyor and the purpose of the brush belt is to maintain their position relative to each other while they are moved by the conveyor. Ex. 1004, 3:16–24, 5:3–14, Fig. 4.

Mr. Prairie's characterization of Koning is unpersuasive because, as discussed above, Koning does not teach using a brush belt alone to receive and convey seeds that have been deposited from a seed meter into the free

end of brush hairs attached to a brush belt. Mr. Prairie does not account for that difference by explaining why an ordinarily skilled artisan would expect Koning's brush belt to effectively capture and carry seeds inserted into the free ends of the brush hairs, as in the proposed combination.

Petitioner and Mr. Prairie (Ex. 1002 ¶¶ 83–87) focus on the brush belt of Koning (belt 44 with brush hairs 45), without considering that the brush belt is only one element of a two-element conveying system, or endless member. Koning's brush belt works in concert with conveying member 23 to hold seeds in place as they are conveyed into the furrow.

Petitioner argues that "[t]he use of brushes to control movement of seeds was also well-known." E.g., Pet. 13 (citing Ex. 1015, Ex. 1030). Neither Thiemke (Ex. 1015) [19] nor Gould (Ex. 1030) [20], however, discloses a brush belt that carries seeds released into the brush hairs.

Figures 3 and 4 of Thiemke are reproduced below:

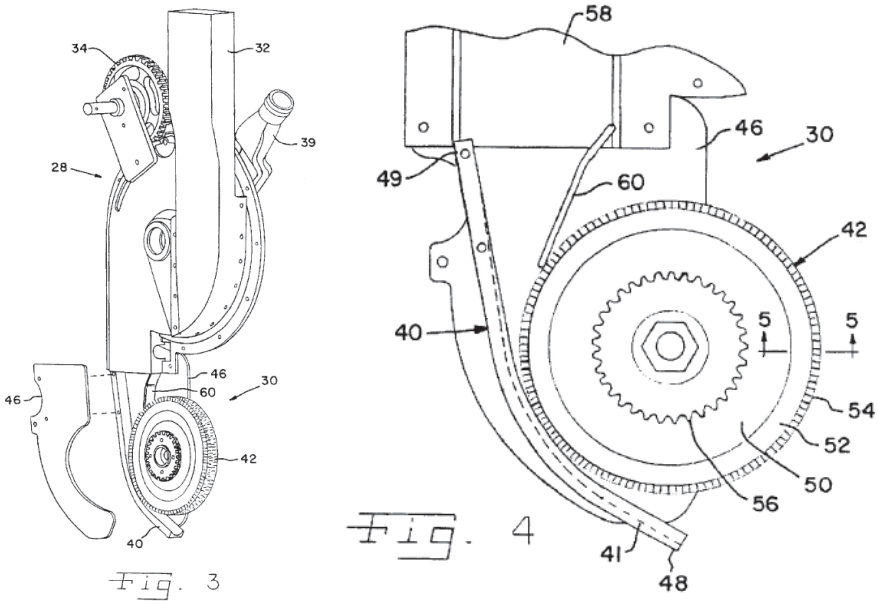

[19] U.S. Pat. No. 6,651,570 B1, issued Nov. 25, 2003.
[20] U.S. Pat. No. 1,376,933, issued May 3, 1921.

Figures 3 and 4 are perspective and side views, respectively, of a seed placement system. Ex. 1015, 3:5–9.

Thiemke explains that seeds discharged from seed metering system 28 are guided by deflector 60 into a nip area between wheel 42 and seed slide 40. *Id.* at 5:47–54. Thiemke teaches that a "gap of approximately one millimeter between the circumferential periphery of wheel 42 and seed slide 40 ensures that the seed is gripped by gripping outside layer 54," which can be formed of nylon bristles. *Id.* at 5:54–57, 5:1–10. Thiemke does not suggest that brush belts can capture seeds released into the brush hairs; indeed, deflector 60 prevents seed from dropping onto the top of wheel 42 in a manner that would be comparable to how Petitioner proposes seed would be captured by Koning's brush belt in the proposed combination.

Gould describes a machine "for taking an individual plant from a quantity, depositing it positively in the ground and properly covering it, and operating with great rapidity." Ex. 1030, 1:25–30. Figure 4 of Gould is reproduced below:

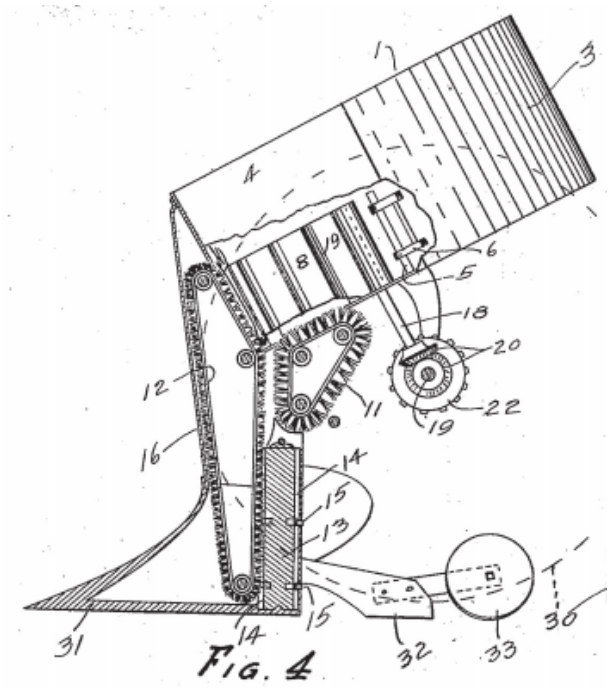

Figure 4 shows a sectional side elevation view of Gould's plant-setting machine. *Id.* at 1:38.

Gould explains that brush belt 11 operates beneath hopper 1 and "travels vertically downward . . . and cooperates with a second brush belt 12 to move the plant from the hopper." *Id.* at 1:75–82. In considering Gould's teaching of two vertically oriented and opposed brush belts that cooperate to move plants from a hopper, we see little relevance to Petitioner's proposal to load seeds into a brush belt by releasing them directly into the bristles.

It is Petitioner's burden to establish that a person of ordinary skill would have been motivated to combine the references in the proposed manner and would have reasonably expect success in doing so. *See* 35 U.S.C. § 316(e); *In re Magnum Oil Tools Int'l, Ltd.*, 829 F.3d 1364, 1376 (Fed. Cir. 2016). Petitioner's arguments and evidence do not carry that burden.

In summary, we are not persuaded that Petitioner has met its burden of showing, by a preponderance of the evidence, that ordinarily skilled

artisans would have been motivated to selectively glean Koning's belt 44 with brush hairs 45 from Koning's "delivery system," but not its companion conveying member 23, and then reorient belt 44 so that the brush hairs receive and convey seeds from Holdt's seed guide, and would have reasonably expected success in doing so.

b) Conclusion for Claim 1

KSR cautions a factfinder to be aware of the "distortion caused by hindsight bias" and to be "cautious of arguments reliant upon *ex post* reasoning. *KSR*, 550 U.S. at 421. Petitioner's proposed combination of the cited references does not meet its burden of providing a sufficiently persuasive evidence-based reason why a person of ordinary skill would have selectively gleaned isolated elements from Koning, modified their operation, and then combined them with Holdt to arrive at the invention recited in independent claim 1.

Based on the Petition and the evidence of record, we determine that Petitioner has *not* established by a preponderance of the evidence that claim 1 is unpatentable.

4. Independent Claims 8 and 17

Independent claim 17, like claim 1, is directed to a "row unit for a seeding machine." Ex. 1001, 8:61–9:3. Independent claim 8 is a method counterpart of claims 1 and 17. *Id.* at 8:20–32.

We have not been directed to any persuasive evidence of any substantive differences between claims 1, 8, and 17 that would cause a different analysis or conclusion for claims 8 and 17 from the conclusion reached for claim 1. Accordingly, based on the analysis and evidence

discussed above for claim 1, we determine that Petitioner has *not* established by a preponderance of the evidence that claims 8 and 17 are unpatentable.

5. Dependent Claims 2–4, 6, 7, 9–11, 13–16, 18–20

Dependent claims 2–4, 6, and 7 depend from claim1. Dependent claims 9–11, and 13–16 depend, directly or indirectly, from claim 8. Claims 18–20 depend from claim 17. These claims stand with the claims from which they depend.

Accordingly, based on the analysis and evidence discussed above for independent claims 1, 8, and 17, we determine that Petitioner has *not* established by a preponderance of the evidence that dependent claims 2–4, 6, 7, 9–11, 13–16, and 18–20 are unpatentable.

IV. CONSTITUTIONAL CHALLENGE

In a single sentence, Patent Owner states it "challenges the constitutionality of, and the panel's authority to adjudicate, this proceeding under *Arthrex, Inc. v. Smith & Nephew Inc.*, 941 F.3d 1320 (Fed. Cir. 2019)." PO Resp. 103.[21] No additional argument or explanation of Patent Owner's challenge is presented.

This constitutional issue has been addressed by the Federal Circuit's decision in *Arthrex*, 941 F.3d at 1337 ("This as-applied severance . . . cures the constitutional violation."); *see also Arthrex, Inc. v. Smith & Nephew, Inc.*, 953 F.3d 760, 764 (Fed. Cir. 2020) (Moore, J., concurring in denial of rehearing) ("Because the APJs were constitutionally appointed as of the implementation of the severance, *inter partes* review decisions going

[21] We note that the Supreme Court has accepted this case for review. *Arthrex, Inc. v. Smith & Nephew, Inc.*, 941 F.3d 1320 (Fed. Cir. 2019), *cert. granted sub nom. United States v. Arthrex, Inc.*, 2020 WL 6037206 (Oct. 13, 2020).

forward were no longer rendered by unconstitutional panels.”). Accordingly, we do not consider this issue any further for this Decision.

V. CONCLUSION

Petitioner has *not* established by a preponderance of the evidence that claims 1–4, 6–11, and 13–20 are unpatentable.

VI. ORDER

In consideration of the foregoing, it is hereby:

ORDERED that claims 1–4, 6–11, and 13–20 have not been proven by a preponderance of the evidence to be unpatentable;

FURTHER ORDERED that Petitioner’s Motion to Exclude is dismissed as moot;

FURTHER ORDERED that Patent Owner’s Motion to Exclude is dismissed as moot; and

FURTHER ORDERED that, because this is a final written decision, parties to this proceeding seeking judicial review of our Decision must comply with the notice and service requirements of 37 C.F.R. § 90.2.

In summary:

Claims	**35 U.S.C. §**	**Reference(s)/Basis**	**Claims Shown Unpatentable**	**Claims Not shown Unpatentable**
1, 2, 4, 6, 7	103	Holdt, Koning		1, 2, 4, 6, 7
3, 8, 9, 13–20	103	Holdt, Koning, Holly		3, 8, 9, 13–20
10	103	Holdt, Koning, Holly, Sauder		10
11	103	Holdt, Koning, Holly, Hanson		11
Overall Outcome				1–4, 6–11, 13–20

FOR PETITIONER:

Grant K. Rowan
Mary V. Sooter
R. Gregory Israelsen
WILMER, CUTLER, PICKERING,
HALE AND DORR, LLP
grant.rowan@wilmerhale.com
mindy.sooter@wilmerhale.com
greg.israelsen@wilmerhale.com

FOR PATENT OWNER:

Jay I. Alexander
Peter P. Chen
Richard L. Rainey
Nicholas L. Evoy
Rajesh D. Paul
COVINGTON & BURLING LLP
jalexander@cov.com
pchen@cov.com
rrrainey@cov.com
nevoy@cov.com
rpaul@cov.com