Trials@uspto.gov
571-272-7822

Paper 95
Date: December 15, 2020

UNITED STATES PATENT AND TRADEMARK OFFICE

BEFORE THE PATENT TRIAL AND APPEAL BOARD

PRECISION PLANTING, LLC and AGCO CORP.,
Petitioner,

v.

DEERE & COMPANY,
Patent Owner.

IPR2019-01055
Patent 9,699,955 B2

Before BARRY L. GROSSMAN, JAMES A. TARTAL, and
TIMOTHY J. GOODSON, *Administrative Patent Judges*.

GOODSON, *Administrative Patent Judge*.

JUDGMENT
Final Written Decision
Determining No Challenged Claims Unpatentable
Denying in Part and Dismissing in Part Petitioner's Motion to Exclude
Dismissing Patent Owner's Motion to Exclude
35 U.S.C. § 318(a)

I. INTRODUCTION

A. Background and Summary

Precision Planting, LLC and AGCO Corp. (collectively, "Petitioner") filed a Petition (Paper 4, "Pet.") requesting *inter partes* review of claims 1–8, 10, 12–17, 19, and 20 of U.S. Patent No. 9,699,955 B2 (Ex. 1001, "the '955 patent"). Deere & Company ("Patent Owner") filed a Preliminary Response. Paper 10. With our authorization, the parties filed additional pre-institution briefing. *See* Paper 11; Paper 13. We instituted an *inter partes* review on all claims on the sole ground asserted in the Petition. *See* Paper 19 ("Dec. on Inst."). After institution of trial, Patent Owner filed a Patent Owner Response. (Paper 34, "PO Resp."), Petitioner filed a Reply (Paper 59, "Pet. Reply"), and Patent Owner filed a Sur-Reply (Paper 68, "Sur-Reply"). We held a hearing on August 31, 2020, a transcript of which is included in the record. *See* Paper 92 ("Tr."). The parties have also filed motions to exclude, which we address below in Section II.

We have authority under 35 U.S.C. § 6. Petitioner bears the burden of proving unpatentability of the challenged claims, and the burden of persuasion never shifts to Patent Owner. *Dynamic Drinkware, LLC v. Nat'l Graphics, Inc.*, 800 F.3d 1375, 1378 (Fed. Cir. 2015). To prevail, Petitioner must prove unpatentability by a preponderance of the evidence. *See* 35 U.S.C. § 316(e) (2018); 37 C.F.R. § 42.1(d) (2019). This Final Written Decision is issued pursuant to 35 U.S.C. § 318(a) and 37 C.F.R. § 42.73. For the reasons discussed below, we determine that Petitioner has not shown by a preponderance of the evidence that claims 1–8, 10, 12–17, 19, and 20 of the '955 patent are unpatentable.

B. Real Parties in Interest

Petitioner lists the following entities as real parties in interest: Precision Planting, LLC; AGCO Corp.; Monsanto Co.; and Bayer AG. *See* Pet. 9. Patent Owner lists only itself as a real party in interest. Paper 5, 1.

C. Related Matters

Patent Owner has asserted the '955 patent against Petitioner in *Deere & Company v. AGCO Corporation,* Civil Action No. 1:18-cv-00827-CFC in the U.S. District Court for the District of Delaware. Pet. 9; Paper 5, 1.

In addition, Petitioner lists the following Board proceedings as related matters:

Case No.	Challenged Patent
IPR2019-01044	U.S. Patent No. 8,813,663
IPR2019-01046	U.S. Patent No. 9,480,199
IPR2019-01047	U.S. Patent No. 9,510,502
IPR2019-01048	U.S. Patent No. 9,686,906
IPR2019-01050	U.S. Patent No. 9,807,922
IPR2019-01051	U.S. Patent No. 9,807,924
IPR2019-01052	U.S. Patent No. 9,820,429
IPR2019-01053	U.S. Patent No. 9,861,031
IPR2019-01054	U.S. Patent No. 10,004,173

Pet. 9.

D. The '955 Patent

The '955 patent issued on July 11, 2017, from an application filed May 5, 2015. Ex. 1001, at codes (45), (22). The '955 patent states that it is a continuation of Application No. 14/504,801, filed October 2, 2014, and a

continuation of Application No. 12/364,010, filed February 2, 2009. *Id.* at code (63).

The ’955 patent relates to a seeding machine having a seed metering system and a seed delivery system for delivering seed from the meter to the ground. Ex. 1001, 1:14–16. In the “Background of the Invention,” the ’955 patent explains that in known seed delivery systems, differences in how individual seeds exit the metering system and drop through the seed delivery tubes cause undesirable variations in seed spacing. *Id.* at 1:62–65. The ’955 patent describes that its system reduces seed spacing variability by capturing the seed, and then moving it, on a controlled descent, from the point at which it exits the metering system to a point near the bottom of the seed trench, so that the seed is discharged at a substantially zero horizontal speed relative to the ground. *Id.* at 2:24–39.

Referring to Figure 3 of the ’955 patent (reproduced below), seed stored in a seed hopper is provided to a seed meter that uses vacuum disk 50 to meter the seed to seed delivery system 28 that carries the seed to a planting furrow. Ex. 1001, 3:20–25.

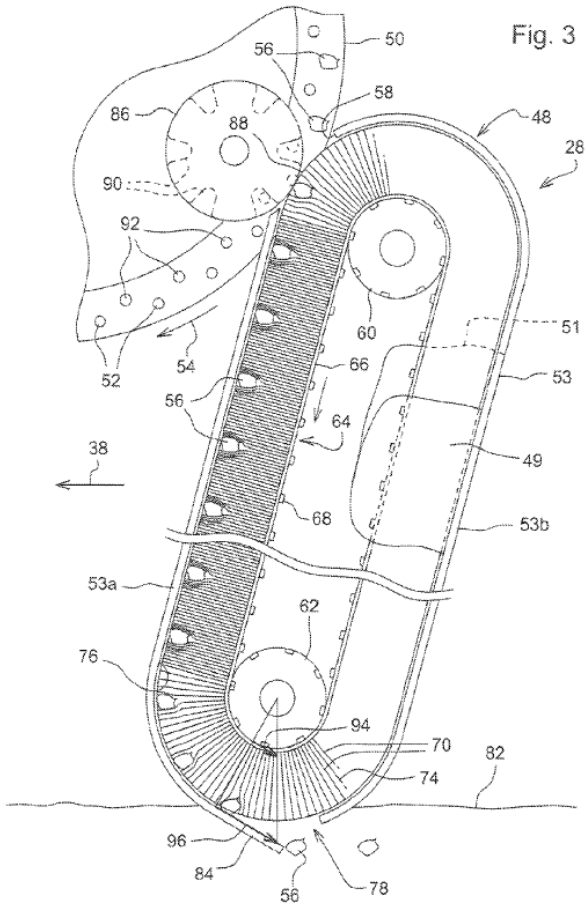

Figure 3 depicts an enlarged side view of a seed delivery system of one embodiment of the invention. Ex. 1001, 2:48–49.

Metering disk 50 is generally flat with a plurality of apertures 52 that collect seeds 56 from a seed pool, which "adhere to the disk by air pressure differential on the opposite sides of the disk 50 in a known manner." Ex. 1001, 3:42–47. Seed delivery system 28 "includes a housing 48 positioned adjacent the seed disk 50." *Id.* at 3:40–41. Housing 48 includes upper opening 58 that "admits the seed from the metering disk 50 into the housing," and "lower housing opening 78 . . . positioned as close to the bottom 80 of the seed trench as possible," through which the seed is discharged into the seed trench. *Id.* at 3:51–54, 63–65, 4:45–46.

Pulleys 60, 62, mounted inside housing 48, support belt 64 for rotation within the housing. Ex. 1001, 3:55–56. The belt has elongated bristles 70, which serve to capture the seed. *Id.* at 3:56–59, 4:27–29. Loading wheel 86 adjacent upper opening 58 is positioned such that the path of the seeds on disk 50 brings the seeds into nip 88 formed between the loading wheel and distal ends 74 of bristles 70. *Id.* at 4:4–8.

As belt 64 rotates counterclockwise around the pulleys, the curve of the pulley causes distal ends 74 of bristles 70 to separate from one another. Ex. 1001, 4:17–22. When the disk brings the seeds into nip 88, the seeds are transferred from the seed meter to the delivery system. *Id.* at 4:24–28. Specifically, as the curved path straightens, the bristle ends close upon themselves and capture the seeds. *Id.* at 4:31–34. As the belt continues to move, bristles 70 convey the seeds downward to housing lower opening 78, with sidewall 53 of the housing cooperating with bristles 70 to hold the seed in the bristles. *Id.* at 4:34–38.

E. Challenged Claims

Petitioner challenges claims 1–8, 10, 12–17, 19, and 20. Of the challenged claims, claims 1, 8, and 16 are independent. Claim 1 is reproduced below, with bracketed labels as added by Petitioner:

> 1. [Pre] A seeding machine for a row unit, the seeding machine comprising:
>
> [a] a seed delivery apparatus including
>
> [b] an elongated housing having a first opening through which seed is received into the seed delivery apparatus, a second opening through which seed exits the seed delivery apparatus, and an elongated interior chamber along which seed is conveyed from the first opening to the second opening, and
>
> [c] an endless member positioned within the elongated housing, the endless member movable within

> the elongated interior chamber of the elongated housing to receive seed from the first opening and convey seed to the second opening;
>
> [d] a seed meter having a plurality of apertures through which an air pressure differential is applied to retain seed thereon; and
>
> [e] a nip proximate the first opening and through which seed from the seed meter passes, wherein seed is carried by the seed meter under the air pressure differential at least to the nip.

Ex. 1001, 7:51–8:4; *see also* Pet. 46–62 (adding labels).

F. Asserted Ground

Petitioner contends that the challenged claims are unpatentable based on the following ground:

References	Basis[1]	Claims Challenged
Hedderwick,[2] Koning,[3] and Benac[4]	§ 103(a)	1–8, 10, 12–17, 19, 20

Pet. 46. In support of its proposed ground, Petitioner relies on the testimony of Mr. Douglas S. Prairie. *See* Ex. 1002; Ex. 1135. Patent Owner relies on the testimony of Dr. James L. Glancey. *See* Ex. 2202.[5] The record also

---

[1] The relevant sections of the Leahy-Smith America Invents Act ("AIA"), Pub. L. No. 112–29, took effect on March 16, 2013. Because the application that issued as the '955 patent states that it is a continuation of an application filed before March 16, 2013, we apply the pre-AIA version of this statute. *See* 35 U.S.C. § 100(i).

[2] GB 2,057,835 A, published Apr. 8, 1981 (Ex. 1003, "Hedderwick").

[3] US 4,193,523, issued Mar. 18, 1980 (Ex. 1004, "Koning").

[4] FR 2,414,288, published Aug. 10, 1979 (Ex. 1006). Citations to Benac in this Decision refer to the English translation of FR '288 in Exhibit 1005.

[5] Petitioner argues that Dr. Glancey's testimony is unreliable because he "is a professional expert witness" who has served as an expert in 144 matters regarding a range of technologies, but has never served as an expert in seed planting technologies; because his opinions have been excluded by courts on three occasions; because he holds four patents that do not relate to seed

includes testimony from several witnesses on topics relating to objective indicia of nonobviousness.

II. MOTIONS TO EXCLUDE

The party moving to exclude evidence bears the burden of proving that it is entitled to the relief requested—namely, that the material sought to be excluded is inadmissible under the Federal Rules of Evidence ("FRE"). *See* 37 C.F.R. §§ 42.20(c), 42.62(a) (2019).

A. Petitioner's Motion to Exclude

1. Brush Belt Videos and Photographs

Petitioner moves to exclude Exhibits 2141–2143, 2186, 2187, and 2198 under FRE 901 as lacking authentication. Paper 70, 1, 6–10. Petitioner also argues that the testimony of Dr. Glancey regarding these exhibits should be excluded. *Id.* at 10–11. The exhibits at issue are videos and photographs of brush belts. Petitioner argues that these videos and photographs are unreliable and should be excluded because Deere has not provided sufficient information about the brush belt that is the subject of the

---

planting technologies; because he allegedly "conceded that he does not understand what the test for obviousness of a patent was in 2003 or in 2009;" and because his answers at his deposition were allegedly inadequate in various ways. *See* Pet. Reply 1–4. Patent Owner responds that Dr. Glancey is a mechanical engineering professor and professional engineer who has "extensive personal and professional experience with farming and seed-planting equipment" and that the three instances in which his testimony was excluded were personal injury litigations unrelated to seed-planting equipment. Sur-Reply 33–35. Patent Owner also attacks the qualifications of Mr. Prairie and asserts that his declaration and deposition testimony has been flawed in various ways. *Id.* We have considered Petitioner's and Patent Owner's arguments in assessing the weight to be given to Dr. Glancey's and Mr. Prairie's testimony. We note that neither party has moved to exclude Dr. Glancey's or Mr. Prairie's testimony.

videos and photographs and the circumstances in which the videos and photographs were made. *Id.* at 4–8. Petitioner further argues that Dr. Glancey's testimony does not authenticate the videos because he did not create them and was unable to answer certain questions about the brush belts' characteristics during his deposition. *Id.* at 9–10.

Petitioner's arguments do not persuade us that Patent Owner's showing is insufficient under FRE 901. A proponent's "burden of proof for authentication is slight." *Lexington Insurance Co. v. Western Pennsylvania Hospital*, 423 F.3d 318, 328 (3rd Cir. 2005). Under FRE 901, the proponent must make a showing "sufficient to support a finding that the item is what the proponent claims it is." Fed. R. Evid. 901(a); *see also United States v. Coohey*, 11 F.3d 97, 99 (8th Cir. 1993) ("To meet this standard, the proponent need only demonstrate a rational basis for its claim that the evidence is what the proponent asserts it to be."). Once that threshold is satisfied, "the evidence goes to the [fact-finder] and it is the [fact-finder] who will ultimately determine the authenticity of the evidence." *Threadgill v. Armstrong World Indus., Inc.*, 928 F.2d 1366, 1375 (3rd Cir. 1991). Here, Dr. Glancey's testimony is adequate to support a finding that these videos and photographs are what Patent Owner claims they are, i.e., brush belts being operated in various ways. *See* Ex. 2200 ¶¶ 165–169. Petitioner's criticisms of the videos and photographs go to the weight that should be assigned to the videos and photographs and Dr. Glancey's testimony about them, and we have considered Petitioner's arguments in assessing the weight those materials should carry.

Additionally, the nature of our proceedings, in which the same panel that decides admissibility also serves as the fact-finder, disfavors exclusion in these circumstances. *See Corning Inc. v. DSM IP Assets B.V.*, IPR2013-

00053, Paper 66, 19 (PTAB May 1, 2014) (sitting as a non-jury tribunal, the Board may assign appropriate weight to evidence presented) (citing *Donnelly Garment Co. v. NLRB*, 123 F.2d 215, 224 (8th Cir. 1941)). As the *Donnelly* court observed, "[o]ne who is capable of ruling accurately upon the admissibility of evidence is equally capable of sifting it accurately after it has been received . . . ." 123 F.2d at 224.

Thus, we deny Petitioner's motion to exclude the videos, photographs, and Dr. Glancey's testimony about those videos and photographs.

2. Dr. Glancey's Redirect Testimony

Next, Petitioner argues that Dr. Glancey's testimony in response to leading questions should be excluded. Paper 70, 12–13. The portions of Dr. Glancey's deposition testimony that Petitioner argues should be excluded are his responses during redirect at Exhibit 1115, pages 267–68. *See id.* We do not rely on those portions of Dr. Glancey's testimony, so we dismiss as moot this aspect of Petitioner's motion.

3. Exhibits 2249 and 2257

Finally, Petitioner argues that Exhibits 2249 and 2257 should be excluded as untimely. Paper 70, 13. Because we do not rely on those exhibits in our analysis, we dismiss as moot this aspect of Petitioner's motion as well.

4. Conclusion

For the foregoing reasons, we deny Petitioner's motion to exclude as to Exhibits 2141–2143, 2186, 2187, and 2198, and we dismiss as moot the remainder of Petitioner's motion to exclude.

B. Patent Owner's Motion to Exclude

Patent Owner moves to exclude Exhibits 1049, 1050, 1052, 1054, 1068, 1073, 1077, 1078, 1086, 1087, 1089, 1091, 1092, 1103, 1113–15,

1123, 1131–33 and paragraphs 84–132 of Exhibit 1135. Paper 73, 15. Most of these contested materials relate to the parties' arguments on objective indicia of nonobviousness, which is an issue we do not reach. Accordingly, we do not rely on most of these exhibits in our analysis. The contested exhibits that we do cite in this Decision are Exhibits 1113, 1114, 1115, and 1133. These exhibits are transcripts from Dr. Glancey's depositions. However, Patent Owner does not actually seek exclusion of those exhibits, only consideration of errata sheets that Dr. Glancey prepared for those transcripts, which Patent Owner filed as Exhibits 2266–69. *See* Paper 73, 10–11. We also cite below to Exhibit 1135, which is Mr. Prairie's Reply Declaration, but not the paragraphs Patent Owner challenges, which relate to objective indicia of nonobviousness. Because we do not rely on the materials that Patent Owner seeks to exclude, and also because we ultimately find for Patent Owner even without excluding these exhibits, we dismiss as moot Patent Owner's motion to exclude.

III. LEVEL OF ORDINARY SKILL IN THE ART

The level of skill in the art is "a prism or lens" through which we view the prior art and the claimed invention, supplying "an important guarantee of objectivity in the process" of assessing an obviousness case. *Okajima v. Bourdeau*, 261 F.3d 1350, 1355 (Fed. Cir. 2001). Factors pertinent to a determination of the level of ordinary skill in the art include: (1) the inventor's educational level; (2) type of problems encountered in the art; (3) prior art solutions to those problems; (4) rapidity with which innovations are made; (5) sophistication of the technology; and (6) educational level of workers active in the field. *Envtl. Designs, Ltd. v. Union Oil Co.*, 713 F.2d 693, 696–697 (Fed. Cir. 1983) (citing *Orthopedic Equip. Co. v. All Orthopedic Appliances, Inc.*, 707 F.2d 1376, 1381–82 (Fed. Cir. 1983)).

"Not all such factors may be present in every case, and one or more of these or other factors may predominate in a particular case." *Id*. Moreover, "[t]hese factors are not exhaustive but are merely a guide to determining the level of ordinary skill in the art." *Daiichi Sankyo Co. v. Apotex, Inc.*, 501 F.3d 1254, 1256 (Fed. Cir. 2007).

Petitioner proposes that a person of ordinary skill in the art (POSITA) "would have had either: (1) a bachelor's degree plus four years of experience in mechanical engineering, agricultural engineering, or a related field; or (2) a master's degree plus two years of experience in mechanical engineering, agricultural engineering, or a related field." Pet. 45 (citing Ex. 1002 ¶¶ 19–20). In the testimony the Petition cites in support of that proposal, Mr. Prairie lists factors that are typically considered in assessing the level of ordinary skill in the art, and then states "[b]ased on these factors as well as my experience and expertise," his opinion of the level of ordinary skill in the art is the same as Petitioner proposes. Ex. 1002 ¶¶ 19–20. This conclusory testimony is entitled to little weight. *See* 37 C.F.R. § 42.65(a) ("Expert testimony that does not disclose the underlying facts or data on which the opinion is based is entitled to little or no weight.").

Patent Owner proposes that the ordinarily skilled artisan "would have an undergraduate degree in mechanical engineering, agricultural engineering, or closely related field" plus "about two years of experience designing agricultural products or related machinery in industry or academia." PO Resp. 2–3 (citing Ex. 2202 ¶¶ 47–52). Patent Owner also proposes that the level of ordinary skill in the art could be achieved without an undergraduate engineering degree, through "about five years of experience designing agricultural products or related machinery." *Id.* Dr. Glancey explains that, in his opinion, Petitioner's proposed level of

ordinary skill is "too restrictive and sets the level of ordinary skill in the art of the '955 Patent too high." Ex. 2202 ¶ 49. Dr. Glancey provides three reasons why he holds this opinion: (1) undergraduate engineering curriculums in place in February 2009 focused on design at the freshman level and continued this focus throughout the student's degree program, thus mitigating the need for significant post-graduate design experience (*id.* ¶ 50); (2) Masters programs in engineering focus on research for publication in peer-reviewed journals, rather than designing products for industry (*id.* ¶ 51); and (3) engineering technicians, who may not have formal engineering degrees, "often have years' worth of relevant hands-on experience," which, in Dr. Glancey's opinion, qualifies him or her to be "considered POSITAs with respect to the '955 Patent" (*id.* ¶ 52).

Based on the evidence and arguments of record, we determine that the evidence favors Patent Owner's proposed level of skill. Our determination is primarily based on Dr. Glancey's analysis and reasons summarized above, as well as the prior art of record and the sophistication of the technology of the '955 patent. We have considered Mr. Prairie's opinion, but we give that testimony minimal weight due to the lack of supporting explanation.

Accordingly, we adopt Patent Owner's proposed level of ordinary skill in the art. Specifically, we determine that a person of ordinary skill in the art would have had an undergraduate degree in mechanical engineering, agricultural engineering, or a similar field, and two years of experience designing agricultural products or related machinery. Alternatively, a person of ordinary skill in the art would have had five years of experience designing agricultural products or related machinery, without a four-year undergraduate engineering degree.

However, we note that the differences between the parties' proposed definition of the level of ordinary skill in the art are not determinative. The analysis below would be materially the same under either party's proposed definition.

IV. CLAIM CONSTRUCTION

"In an *inter partes* review proceeding, a claim of a patent . . . shall be construed using the same claim construction standard that would be used to construe the claim in a civil action under 35 U.S.C. 282(b)." *See* Changes to the Claim Construction Standard for Interpreting Claims in Trial Proceedings Before the Patent Trial and Appeal Board, 83 Fed. Reg. 51,340, 51,358 (Oct. 11, 2018) (amending 37 C.F.R. § 42.100(b) effective November 13, 2018) (now codified at 37 C.F.R. § 42.100(b) (2019)).[6] That standard "includ[es] construing the claim in accordance with the ordinary and customary meaning of such claim as understood by one of ordinary skill in the art and the prosecution history pertaining to the patent." *Id.*; *see also Phillips v. AWH Corp.*, 415 F.3d 1303 (Fed. Cir. 2005) (en banc).

We determine that no terms require express construction to resolve the parties' dispute. *See Vivid Techs., Inc. v. Am. Sci. & Eng'g, Inc.*, 200 F.3d 795, 803 (Fed. Cir. 1999) (claim terms need only be construed "to the extent necessary to resolve the controversy"); *see also Nidec Motor Corp. v. Zhongshan Broad Ocean Motor Co.*, 868 F.3d 1013, 1017 (Fed. Cir. 2017) (applying *Vivid Techs.* in the context of an *inter partes* review).

[6] The Petition in this case was filed May 29, 2019. *See* Paper 8, 1.

V. OBVIOUSNESS OVER HEDDERWICK, KONING, AND BENAC

A. Legal Standards for Obviousness

In *Graham v. John Deere Co. of Kansas City*, 383 U.S. 1 (1966), the Supreme Court set out a framework for assessing obviousness under § 103 that requires consideration of four factors: (1) the "level of ordinary skill in the pertinent art," (2) the "scope and content of the prior art," (3) the "differences between the prior art and the claims at issue," and (4) when in evidence, "secondary considerations" of non-obviousness such as "commercial success, long-felt but unsolved needs, failure of others, etc." *Id.* at 17–18. When a combination of references together discloses all of the limitations in a claim, the Board "must determine whether there was an 'apparent reason to combine the known elements in the fashion claimed by the patent at issue,' and whether a person of skill in the art at the time of the invention would have had a 'reasonable expectation of success' in pursuing that combination." *Los Angeles Biomedical Research Institute v. Eli Lilly & Co.*, 849 F.3d 1049, 1064 (Fed. Cir. 2017) (quoting *KSR Int'l Co. v. Teleflex Inc.*, 550 U.S. 398, 406 (2007) and *Genzyme Therapeutic Prods. Ltd. v. Biomarin Pharm. Inc.*, 825 F.3d 1360, 1373 (Fed. Cir. 2016)).

B. Summary of Cited Prior Art References

1. Hedderwick

Hedderwick relates to a precision seeder, which it defines as "a seeding device able to deposit single seeds at predetermined spacings." Ex. 1003, 1:5–8. The seeder includes a seed hopper that transfers seeds to a rotating vacuum disc, which has orifices around its periphery that receive and retain seeds by pressure differential. *Id.* at 3:46–52. Figure 2 is reproduced below:

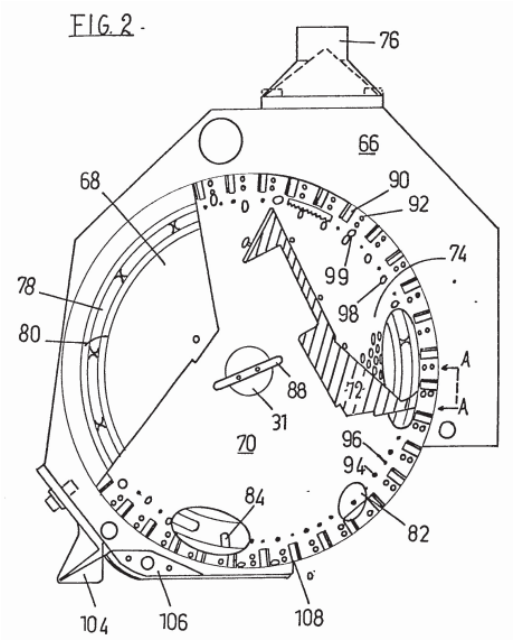

Figure 2 depicts a side elevation view of a seeder casing with the disc in place and with a surface portion broken away to illustrate the operation of the seeder. *Id.* at 1:100–101.

The vacuum disc rotates in a counterclockwise direction, past various devices, to ensure that a single seed is retained by the orifice, and continues to rotate until the "seeds have passed the end of vacuum inlet 78 at about 7 o'clock." Ex. 1003, 3:45–61. When the seeds' "associated vacuum holes 94 are in register with recess 84 in the wear plate 80," the seeds drop into a cell bounded by fins 90. *Id.* at 3:55–63. The seed falls from the cell when it reaches drop off lip 108, which is positioned slightly past bottom dead center. *Id.* at 3:66–73.

Hedderwick describes a second embodiment for use when "the vertical distance to be travelled by the seeds is greater." Ex. 1003, 4:2–5. Figure 4 is reproduced below:

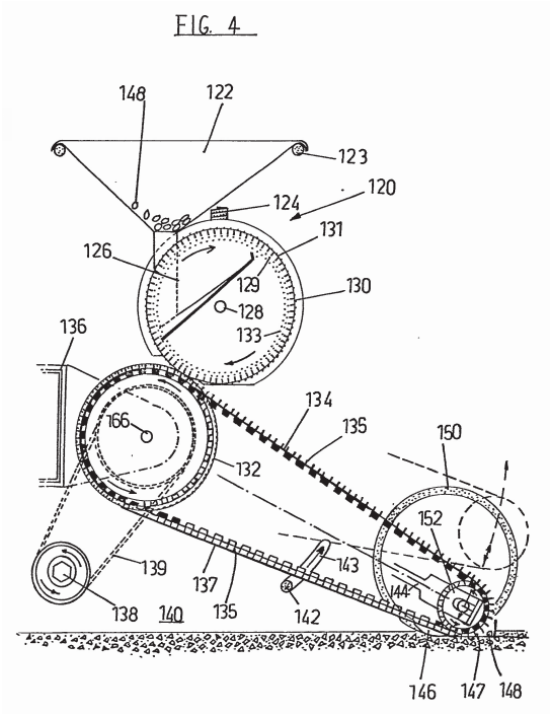

Figure 4 depicts a side elevation view of a seeder with parts broken away. *Id.* at 1:108–109.

Disc 130 of the second embodiment can have the same construction as disc 70 shown in Figure 2, although disc 130 rotates in a clockwise direction in Figure 4. *Id.* at 4:10–13, 5:51–53. "The major change in the seeder is the provision of an endless belt 134 which has a series of fins 135 projecting upwardly therefrom." *Id.* at 4:23–25. Fins 135, together with casing 137 and belt 134, define a series of moving cells. *Id.* at 4:23–28; Fig. 4. These "cells are synchronised to align with orifices 129 of disc 130," such that when disc 130 releases a seed it is released into a cell and each cell carries a seed. *Id.* at 4:28–5:5. Belt 134 passes over idler sprocket 152 and driven sprocket 132, which drives the belt and thus seeds 148 in the cells, to an end of casing 137 where the seed is discharged. *Id.* at 5:6–7, 74–78; Fig. 4.

2. Koning

Koning "relates to a planting machine for potatoes, bulbs or similar seed crop." Ex. 1004, 1:5–6. Figure 4 is reproduced below:

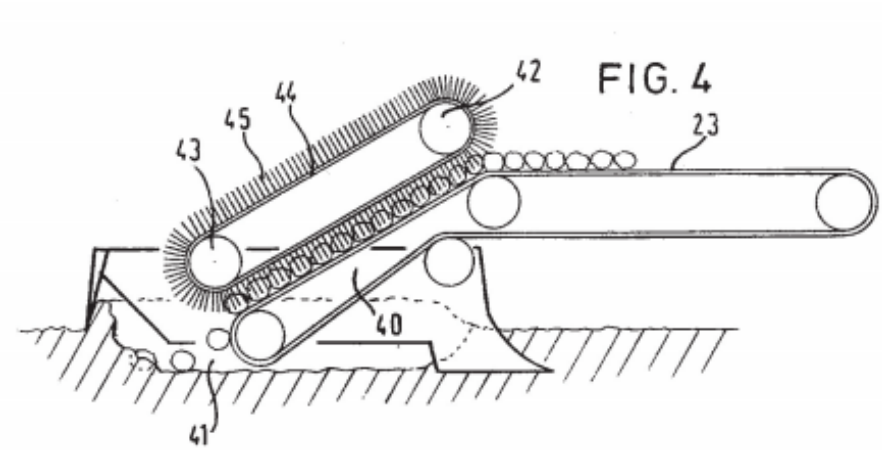

Figure 4 depicts an end part of a planting machine schematically in a side view. *Id.* at 3:32–33.

The planting machine includes conveying member 23 having part 40 that extends in a backward direction to a point in furrow 41. *Id.* at 5:3–6. Belt 44 is above part or portion 40 of conveying member 41, is guided around rollers 42 and 43, and includes brush hairs 45. *Id.* at 5:6–8. Brush hairs 45 of belt 44 hold the seed crop on part 40 of belt or conveying member 23 so that the seed crop delivered by the conveying members are delivered at "the same distance in relation to each other in the furrow 41." *Id.* at 5:8–14. Specifically, "the brush hairs hold the potatoes or the like lying on the conveying surface [23] till the moment that they leave the belt." *Id*. at 3:16–18. Thus, in Koning, it is the combination of two belts or conveying members, belt 44 with brush hairs 45, *and* belt 23 that function together to convey seeds to furrow 41. *Id.* at 5:11–14. By holding the potatoes or the like "till the very last moment . . . the velocity of the potatoes in relation to each other is completely defined. Under all circumstances a regular distribution of the potatoes in the furrow is obtained." *Id.* at 3:18–22.

3. Benac

Benac relates to a vacuum seed spreader. Ex. 1005, 1:1. The "vacuum seed spreader comprising, as is known, a rotary vertical disk 1 forming a partition between a seed chamber 2 and a vacuum chamber 3, generally of annular form." *Id.* at 3:15–18. As seen in Figure 1, reproduced below, disk 1 "is pierced with orifices 4 evenly distributed over a circle concentric to the disk." *Id.* at 3:20–21.

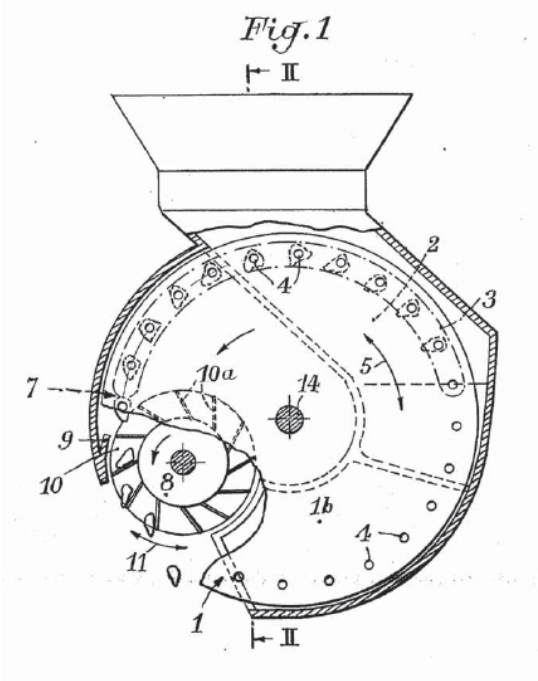

Figure 1 depicts a cross-sectional view of a seed spreader. Ex. 1005, 3:1.

Suction from the vacuum chamber draws seeds against the orifices so that the seeds rotate with the disk. *Id.* at 3:29–31. "A paddle wheel 8 is adjacent to the first face 1a of the disk and determines, with this face 1a and with a casing 9 that is adjacent and concentric to the paddle wheel, sealed cells 10 for the seeds." *Id.* at 4:6–9. The bottom of casing 9 opens to dropping zone 11 in which the seeds are dropped or projected toward the ground. *Id.* at 4:11–13. Cells 10 of the paddle wheel "transport, one by one, the seeds

released from the vacuum in the zone 7 just into the dropping zone 11." *Id.* at 4:13–15. Specifically, "paddles 10a of the paddle wheel 8 sweep the orifices 4 of the disk between the release zone 7 and the dropping zone 11, such that the seeds are necessarily extracted from the orifices 4 upstream of the dropping zone." *Id.* at 5:4–9.

C. Claim 1

1. Overview of the Parties' Contentions

Petitioner contends that the combination of Hedderwick, Koning, and Benac together teaches every limitation in claim 1, and that an ordinarily skilled artisan would have been motivated to combine the references to yield the claimed invention. *See* Pet. 34–41, 46–68. To briefly summarize the manner in which Petitioner relies on the cited references, Petitioner contends that Hedderwick teaches the preamble and limitation [d]. *See id.* at 46–48, 60–62. Petitioner proposes modifying Hedderwick by replacing finned belt 134 with Koning's brush belt, and contends that Hedderwick so modified teaches limitations [a]–[c]. *See id.* at 48–60. In particular, Petitioner relies on Koning's brush belt to disclose the "endless member" recited in limitation [c]. *See id.* at 57.[7] Petitioner contends that when Benac's paddle wheel is positioned proximate Hedderwick's orifice 141, the resulting combination teaches every aspect of limitation [e]. *See id.* at 62–68.

[7] The parties do not present, and we do not reach, the issue of whether the recited "endless member" of the challenged claims requires a brush belt. As discussed in greater detail below (*see infra* § II.C.2.a), Petitioner has intentionally and unequivocally framed its challenge as a combination of teachings from the asserted prior art that includes a brush belt, and that is the challenge that we are limited to considering.

The Petition includes the following modified version of Hedderwick's Figure 4 to illustrate how Petitioner proposes to combine Benac's paddle wheel into Hedderwick and Koning:

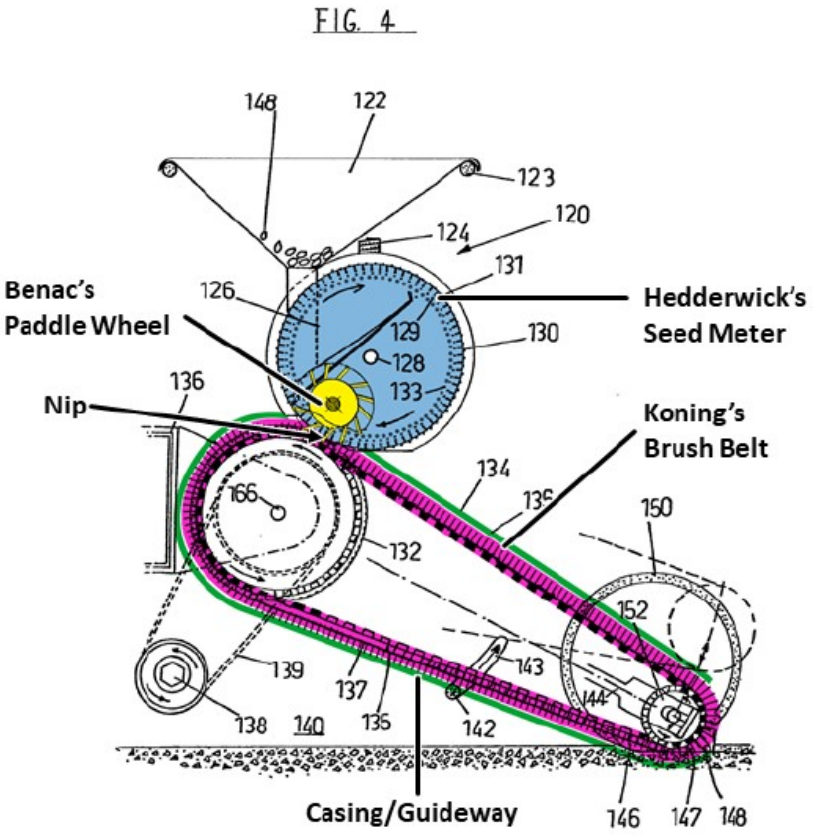

Pet. 67. In Petitioner's drawing, Benac's paddle wheel (colorized yellow) is added adjacent Hedderwick's seed meter disc (colorized blue), and Koning's brush belt (colorized purple) is substituted for Hedderwick's finned belt. Petitioner explains that in the proposed combination, "the paddle wheel would remove the seeds from the disc, and push the seeds through the intake opening into the bristles of Koning's brush belt." *Id.* at 40; *see also id.* at 66 ("When Hedderwick's endless belt is substituted with Koning's brush belt, the bristles of the brush belt would receive the seed removed from Hedderwick's seed meter disc via Benac's paddle wheel directly through the first opening in Hedderwick's casing.").

According to Petitioner, ordinarily skilled artisans would have been motivated to replace Hedderwick's finned belt with Koning's brush belt, in order to improve the accuracy of seed spacing. *See id.* at 51. Specifically, Petitioner argues that in Hedderwick, seeds can move within the cells of the finned belt, which means that the relationship between seeds is not completely defined by the belt before the seeds are deposited into the soil. *Id.* at 36. An ordinarily skilled artisan "seeking to achieve finer seed spacing would have been motivated to combine the teachings of Koning's brush belt with Hedderwick to hold the seeds more precisely in place during their descent." *Id.* As for the motivation to incorporate Benac's paddle wheel, Petitioner points to Benac's teaching that seeds can become jammed in the suction orifices, and that its paddle wheel is used to sweep the orifices to promote uniform seed spacing. *Id.* at 38 (citing Ex. 1005, 2:12–34); *see also id.* at 64 (noting Benac's teaching to use a paddle wheel to ensure that seeds are "necessarily extracted from the orifices") (quoting Ex. 1005, 5:4–9). Petitioner contends that an ordinarily skilled artisan would have been motivated to incorporate Benac's paddle wheel into Hedderwick's seed meter "to improve seed control and planting accuracy by reliably removing seeds from Hedderwick's disk at the proper location." *Id.* at 64 (citing Ex. 1002 ¶ 106).

Patent Owner counters that Koning does not qualify as analogous art and, relatedly, that judicial estoppel bars Petitioner from contending otherwise. PO Resp. 7–17. Patent Owner further argues that an ordinarily skilled artisan would not have been motivated to combine Koning's belt with Hedderwick and Benac, and would not have expected that combination to succeed. *Id.* at 18–33; Sur-Reply 13–19. Patent Owner also challenges the motivation and reasonable expectation of success for the incorporation of

Benac's paddle wheel. PO Resp. 33–48; Sur-Reply 19–28. And Patent Owner argues that incorporating Benac's paddle wheel would not yield a "nip" as claimed. PO Resp. 49–61; Sur-Reply 29. Patent Owner also submits evidence of objective indicia of nonobviousness. PO Resp. 61–98; Sur-Reply 2–10.

2. Motivation to Combine and Reasonable Expectation of Success

Of the disputed issues summarized in the preceding section, our analysis focuses on whether an ordinarily skilled artisan would have been motivated to combine the references in the manner Petitioner proposes and would have reasonably expected success in doing so. Because those issues are dispositive of Petitioner's challenge, it is unnecessary for us to resolve the other disputed issues. *See, e.g., Adidas AG v. Nike, Inc.*, 963 F.3d 1355, 1359 (Fed. Cir. 2020) (affirming Board's determination that claims were not shown to be obvious because the petitioner had not demonstrated that an ordinarily skilled artisan would have been motivated to combine the references); *Samsung Electronics Co. v. Elm 3DS Innovations, LLC*, 925 F.3d 1373, 1383 (Fed. Cir. 2019) (determining that it is unnecessary to reach other issues when reasonable expectation of success is dispositive).

a) We Evaluate the Combination as Petitioner Has Chosen to Frame It

We note at the outset of this analysis that Petitioner chose a peculiar, and seemingly unnecessarily complex, manner of combining the references to yield the limitations of the claim. Specifically, as we remarked in our Decision on Institution, it is unclear that Koning is necessary, insofar as Hedderwick may disclose the "endless member" of limitation [c] without finned belt 134 being replaced by Koning's brush belt. *See* Dec. on Inst. 18–19. However, Petitioner did not present a challenge based on Hedderwick

and Benac, without Koning. *See* Pet. 11. Patent Owner argues, persuasively, that Koning is a necessary part of the challenge that the Petition presented. PO Resp. 5–7. Petitioner does not contest that point in its Reply. At the hearing, Petitioner made clear that the challenge it has chosen to pursue is based on the combination of Hedderwick, Benac, and Koning, and that it is not presenting any challenge that does not include Koning:

> JUDGE GOODSON: Counsel, I had a question on this general topic. *Is Petitioner urging obviousness based on Hedderwick and Benac, without Koning?*
>
> MR. SUMMERSGILL: *No, Your Honor. We're sticking to the grounds of the Hedderwick, Benac and Koning*. We included the footnote that we included [*see* Pet. 46 n.13 (cited in Dec. on Inst. 19)] because we do believe that under Deere's interpretation of the patents that it's advancing in the district court that Hedderwick and Benac alone disclosed everything. But we put that more to note the inconsistency of the district court, the positions they're taking to the district court and the positions they're taking here. But *the one ground we're advocating for obviousness here is Hedderwick, Koning and Benac*.
>
> JUDGE GOODSON: Okay, and then do we need to construe endless member?
>
> MR. SUMMERSGILL: We don't think you need to construe endless member.

Tr. 13:4–14 (emphasis added); *see also id.* at 42:8–15 (agreeing that a determination to apply judicial estoppel to exclude Koning would be case dispositive because "[i]f you were to agree with the Patent Owner on judicial estoppel that Petitioner cannot use Koning in any of the references, I think based upon the fact that Koning is used as one of the references in each of

the combinations[8] we propose, I think it would be, you know. I don't think there's any dispute about that.").

Because the proposed combination as Petitioner chose to frame it includes Benac's paddle wheel and Koning's "endless member," which is a brush belt, coming together to form the claimed "nip," with Benac's paddle wheel pushing seeds into the bristles of the brush belt (*see* Pet. 40, 66), it is incumbent on Petitioner to show that an ordinarily skilled artisan would have been motivated to combine the references in that proposed manner and would have reasonably expected success in doing so. *See Adidas*, 963 F.3d at 1359–60; *Samsung*, 925 F.3d at 1382–83. The Federal Circuit has made clear that a satisfactory explanation of "*how* the combination of the . . . references [is] supposed to work" is necessary to support "a conclusion that a relevant skilled artisan would have been motivated to make the combination and reasonably expect success in doing so." *Personal Web Techs., LLC v. Apple, Inc.*, 848 F.3d 987, 994 (Fed. Cir. 2017) (emphasis in original).

Further, "the petitioner's petition . . . is supposed to guide the life of the litigation," *SAS Inst., Inc. v. Iancu*, 138 S.Ct. 1348, 1356 (2018), and it would "not be proper for the Board to deviate from the grounds in the petition and raise its own obviousness theory." *Sirona Dental Sys. v. Institut Straumann AG*, 892 F.3d 1349, 1356 (Fed. Cir. 2018). The Federal Circuit recently held the Board erred when it instituted inter partes review based on a combination of prior art references not advanced in a petition because "the Board does not 'enjoy[] a license to depart from the petition and institute a

[8] There is only one combination at issue in this proceeding (*see* Pet. 11), but the hearing was a combined hearing for this and several other related cases. *See* Paper 65, 2.

different inter partes review of [its] own design." *Koninklijke Philips N.V. v. Google LLC*, 948 F.3d 1330, 1336 (Fed. Cir. 2020) (quoting *SAS*, 138 S.Ct. at 1356). These precedents make clear that "the petitioner's contentions, not the Director's discretion, define the scope of the litigation all the way from institution through to conclusion." *SAS*, 138 S.Ct. at 1357; *see also id.* at 1355 ("Congress chose to structure a process in which it's the petitioner, not the Director, who gets to define the contours of the proceeding."). In accordance with this framework, we look to the Petitioner's explanation of how the proposed combination of Hedderwick, Benac, and Koning would work in assessing motivation and reasonable expectation of success.

Here, in summary and as further detailed below, we are not persuaded that Petitioner has met its burden of showing, by a preponderance of the evidence, that ordinarily skilled artisans would have been motivated to combine the references in the proposed manner, and would have reasonably expected success in doing so: namely, to selectively glean as an "endless member" Koning's belt 44 with brush hairs 45, but without conveying member 23, and reorient belt 44 so that brush hairs 45 receive seeds from above, and to use Benac's paddle wheel to push seeds into Koning's brush belt.

In Petitioner's proposed combination, Benac's "paddle wheel would remove the seeds from the disc [of Hedderwick], and push the seeds through the intake opening into the bristles of Koning's brush belt." Pet. 40; *see also* Ex. 1002 ¶ 77 (Petitioner's expert, Mr. Prairie, testifying same). Petitioner's asserted motivation for incorporating Benac's paddle wheel is to provide "a reliable way of releasing seeds from the seed meter to achieve uniform seed spacing." Pet. 38; *see also* Ex. 1002 ¶ 74 (Mr. Prairie testifying the same). Petitioner further argues that "there would have been a reasonable

expectation of success, because such a combination would have been combining known components (Koning's brush belt and Benac's paddle wheel) to a known device (Hedderwick's seeding machine with a vacuum seed meter)." Pet. 41 (citing Ex. 1002 ¶ 79); *see also id.* at 40 (arguing that an ordinarily skilled artisan "would have recognized Koning's brush belt and Benac's paddle wheel as known techniques—tools in the [person of ordinary skill in the art]'s toolbox—that could be applied in a known way to Hedderwick to provide the predictable benefits disclosed in Koning and Benac of increasing control over seeds as they are transported to the ground.") (citing Ex. 1002 ¶ 78).

In our view, Petitioner's arguments elide the differences between the way the references use endless members in the form of brush belts and paddle wheels, versus the way Petitioner uses those components in the proposed combination. Contrary to Petitioner's and Mr. Prairie's assertions, the proposed combination does not merely apply known techniques to a known device, because none of the cited references use brush belts and paddle wheels in the manner Petitioner proposes. As discussed in greater detail below, Benac teaches that a paddle wheel can be used to ensure that seeds jammed in vacuum holes are released reliably, and then drop to the ground. Benac does not address brush belts as an endless member and, therefore, does not teach that paddle wheels can be used to push seeds into the bristles of a brush belt, as Petitioner proposes. *See* Pet. 40. And Koning does not teach a brush belt that receives or captures seeds released from above, as Petitioner proposes. *See* Pet. 66; Pet. Reply 30 (explaining that in the proposed combination, "[t]he brush belt captures the seed from the disc as it is guided or inserted into the brush by the wheel. . . . Benac's wheel guides or inserts seed so that it is captured by Koning's brush bristles.");

Ex. 2193, 190:10–191:3; Ex. 2263, 167:21–170:9. Rather, Koning's brush belt maintains the relative position of potatoes lying on a conveying surface by holding them from above while the conveyor moves them to the furrow. Ex. 1004, 3:16–24, 5:3–14, Fig. 4.

Petitioner's arguments do not adequately account for these differences between the references' use of a brush belt as an endless member and paddle wheels versus the proposed combination. Moreover, Patent Owner points out problems ordinarily skilled artisans would have encountered in attempting to combine the references as Petitioner proposes. Petitioner does not persuasively explain how those issues could have been overcome, and instead simply asserts, essentially, that ordinarily skilled artisans could have figured it out. *See, e.g.*, Ex. 1135 ¶ 78 ("[A] person of ordinary skill in the art would have determined through no more than routine experimentation how to orient Benac's paddle wheel so that it could operate with Koning's brush belt bristles to pinch seeds from the seed meter."). It is Petitioner's burden to establish that ordinarily skilled artisans would have been motivated to combine the references in the proposed manner and would have reasonably expected success in doing so. *See* 35 U.S.C. § 316(e); *In re Magnum Oil Tools Int'l, Ltd.*, 829 F.3d 1364, 1376 (Fed. Cir. 2016). Petitioner's arguments and evidence do not carry that burden.

b) Proposed Use of a Paddle Wheel to Guide Seeds Directly Into a Brush Belt

With that overview, we turn to Benac to consider in greater detail the differences between its use of a paddle wheel and Petitioner's proposed manner of using a paddle wheel. Benac explains that the purpose of its paddle wheel is to provide a consistent, reliable release of seeds, which

otherwise can become jammed in suction holes and drop at unpredictable positions:

> The function of the paddle wheel is specifically primarily to retain the seeds released from the vacuum before they are dropped, in order for all the seeds to be dropped in the same way and therefore not to be subjected to the uncontrollable effects of a greater or lesser suction because of their form. However, it is very commonplace for the seeds to be retained simply by jamming on the suction orifices such that, if no means, and in particular the paddles of the paddle wheel, are provided to sweep the suction orifices, the detaching of the seeds remains random, which is obviously detrimental to the accuracy of the seeding.

Ex. 1005, 2:12–23. Seeds removed by Benac's paddle wheel are "dropped" (*id.* at 2:10, 2:14–15, 4:12, 5:25), "ejected" (*id.* at 2:32), or "projected" (*id.* at 4:12, 5:26) into dropping zone 11 toward the ground with "a backward speed significantly opposing the speed of advance of the seed spreader." *Id.* at 5:27–28, Fig. 1.

Petitioner's proposed combination uses Benac's paddle wheel not to simply dislodge seeds stuck in the metering disc and drop them to the ground, but to "push the seeds through the intake opening into the bristles of Koning's brush belt." Pet. 40. The proposed combination does not simply apply a known technique in a known way (*id.*) because Benac does not describe using a paddle wheel to push seeds into the bristles of a brush belt. *See* PO Resp. 53. Petitioner's arguments regarding motivation and reasonable expectation of success address the use of a paddle wheel to remove seeds from a seed meter. *See* Pet. 37–40, 64–66. Petitioner does not persuasively explain how or why an ordinarily skilled artisan would use a paddle wheel to push seeds into an endless member that is a brush belt.

Moreover, Patent Owner identifies problems that ordinarily skilled artisans would have expected when combining Benac's paddle wheel and

Koning's brush belt in the manner Petitioner proposes. The figure reproduced below is a detailed portion of Petitioner's drawing illustrating the proposed combination:

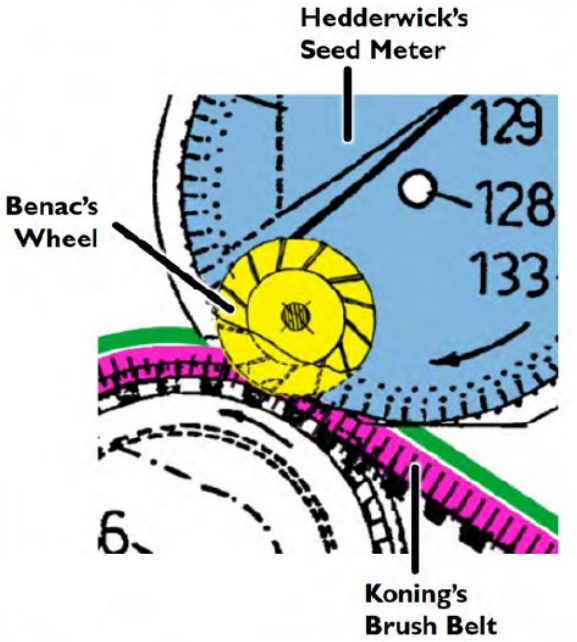

Ex. 1147, 229; *see also* Tr. 17:20–18:7 (Petitioner referring to its demonstrative slide 229 as showing the position of Benac's paddle wheel in the proposed combination); Pet. 67; Ex. 1002 ¶ 110; Pet. Reply 29, 31. This figure shows the position of Benac's paddle wheel (colorized yellow) relative to Hedderwick's seed meter disc (colorized blue) and Koning's brush belt (colorized purple) in Petitioner's proposed combination. Patent Owner argues that in this proposed system, "Benac's paddles would likely cause seeds simply to pass through the brush bristles and be ejected from the brush . . . ." PO Resp. 52.

Patent Owner's expert, Dr. Glancey, explains that

> [i]f a wheel is used to load and place seeds within a moving belt with brush hairs, the wheel must be able to disengage from seeds while the seeds remain in between brush hairs. If the wheel maintains contact with the seed after the seed has moved into the

> brush hairs, the wheel will continue to apply force to the seed and eject or remove the seed from the profile of the brush hairs . . . .

Ex. 2202 ¶ 225. Dr. Glancey testifies, credibly, that in Petitioner's combination, seeds would have been rejected from the belt because, as the paddle wheel rotates, seeds "would be scooped through the belt." *Id.* ¶ 227.

Dr. Glancey illustrates his testimony with the following "still frames from a high speed video provided by Mr. Garner:"

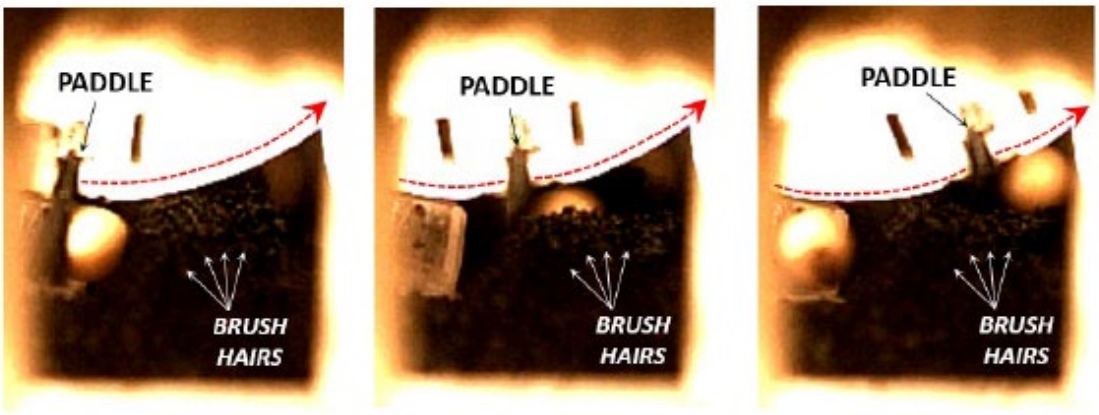

Seed contacts brush hairs | *Seed moves into brush hairs* | *Seed passes through brush hairs*

The still frames reproduced above depict, according to Dr. Glancey's description, a seed contacting brush hairs, moving into brush hairs, and passing through brush hairs as the paddle pushing the seed follows a path of rotation. Ex. 2202 ¶ 225 (citing Ex. 2142). We note that Dr. Glancey does not describe the setup of the brush belt and paddle depicted in the video. In our review of the video, the brush belt appears to be rotating in a plane perpendicular to the paddle wheel's plane of rotation, which differs from the arrangement in Petitioner's proposed combination, in which the paddle wheel and brush belt are both rotating in the same plane. *See* Ex. 2142; *see also* Ex. 2202 ¶ 225 (Dr. Glancey noting that in the proposed combination, Benac's paddle wheel is "rotating in the same plane as the belt"); Ex. 1135

¶ 77 (Mr. Prairie pointing out that the video in Exhibit 2142 "shows a wheel sweeping seeds perpendicular to the direction of the brush belt," which is different than the proposed combination). These points undermine the value of the video in Exhibit 2142 as a simulation of how seeds would behave in the specific arrangement Petitioner proposes.

Nevertheless, the video and the frames taken from it still serve to illustrate Dr. Glancey's more basic point that a paddle wheel can scoop seeds out of a brush belt as the paddle rotates through the bristles.[9] Although Petitioner and Mr. Prairie criticize the video as unreliable evidence of how a paddle wheel interacts with a brush belt, *see* Pet. Reply 11–12; Ex. 1135 ¶ 76, Petitioner offers no countervailing evidence of real-world interactions of a paddle wheel with a brush belt. *See* Ex. 2263, 173:8–174:2 (Mr. Prairie testifying that he did not do any experiments or take any videos to determine whether a paddle wheel would help or hinder a seed being accepted into a brush belt because he "did not feel that they were necessary"). Regardless, even without considering videos or photos from videos, the geometry of paddle wheel and brush belt in Petitioner's proposed combination supports the point that the paddle wheel could scoop the seeds out of the brush belt as it rotates through the bristles. We credit Dr. Glancey's testimony that an ordinarily skilled artisan would have had to

[9] Dr. Glancey's deposition testimony indicates that his use of the video was illustrative rather than experimental. *See* Ex. 1114, 147:10–19 ("I asked for exemplar videos that illustrated the problems that are highlighted in this section. . . . I needed videos that illustrated the problems that I observed to exist with a brush belt, . . . where there is no blocking surface or loading surface to reliably insert the seed into the brush."). In other words, the purpose of the video is not to replicate the proposed combination but to illustrate a basic phenomenon that an ordinarily skilled artisan would expect to occur in the proposed combination.

redesign Benac's wheel to function as Petitioner proposes without ejecting or extracting seeds from the brush bristles. Ex. 2202 ¶ 228.

We agree with Patent Owner that Petitioner has not presented a persuasive rebuttal to Dr. Glancey's testimony that Benac's paddle wheel would be expected to scoop seeds out from the brush belt in Petitioner's combination. *See* Sur-Reply 25. In its Reply, Petitioner responds to many of Patent Owner's arguments about alleged incompatibilities skilled artisans would face in attempting to incorporate Benac's paddle wheel in Hedderwick, *see* Pet. Reply 17–27, but does not squarely address Patent Owner's argument that an ordinarily skilled artisan would expect Benac's paddle wheel to expel seeds from the brush belt in the proposed combination. Petitioner has not offered credible evidence that this seed scooping problem would not occur, nor has it explained any concrete measures that could be taken to mitigate the problem.

When asked why the Benac paddle wheel would not push the seeds out of the brush belt in the proposed combination, Petitioner and Mr. Prairie responded that ordinarily skilled artisans would have been able to make this proposed combination work. *See* Tr. 19:1–13 ("[S]ince these are relatively straightforward mechanical arts, this is an area where . . . persons of ordinary skill in the art, folks who are actually working in this field would know, how to configure this . . . so, that it would work."); Ex. 2263, 180:8–181:13 (Mr. Prairie testifying, in response to question about whether the paddle wheel would eject the seeds from the brush belt, that "[i]t's not my opinion that that would—something that designed the systems could—I believe could—with rudimentary design experimentation could keep that from happening"); *see also* Ex. 1135 ¶ 78 ("[A] person of ordinary skill in the art would have determined through no more than routine experimentation how

to orient Benac's paddle wheel so that it could operate with Koning's brush belt bristles to pinch seeds from the seed meter."). These responses lack specificity and adequate underlying support. Indeed, Mr. Prairie testified that he has never seen a paddle wheel interact with a brush belt. Ex. 2193, 209:24–210:3. Further, it remains unclear how an ordinarily skilled artisan would have been able to make the proposed combination work without modifying Benac's paddle wheel, which Petitioner has not proposed and Mr. Prairie has testified would not be changed. Ex. 2263, 172:2–4 ("[T]he design would not change. The fundamental design utilized in the teaching of Benac would not change.").

We note that in arguing the related topic of whether Benac's paddle wheel and Koning's brush belt would form a "nip" as claimed, Petitioner argues that when positioned as Petitioner proposes, Benac's "paddle wheel and Koning's brush belt would work together to pinch seed off the seed meter" in "the same way that seeds in the '955 patent enter the brush belt." Pet. Reply 29 (citing Ex. 1003, 4:23–28, 5:56–60; Ex. 1113, 289:22–290:7, 292:5–19; Ex. 1133, 88:7–90:2, 93:16–22; Ex. 1135 ¶¶ 74–78). To illustrate this assertion, Petitioner includes the following figure:

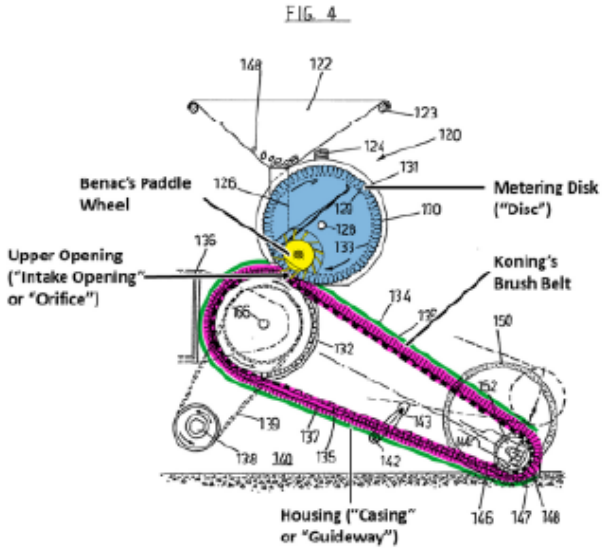

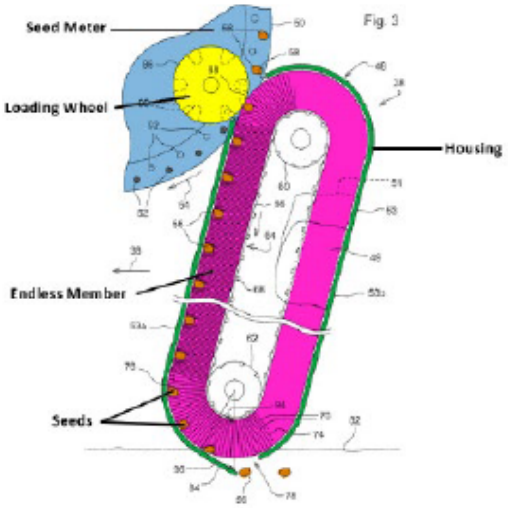

Petitioner's figure shows the proposed combination on the left and an annotated version of Figure 3 from the '955 patent on the right. *Id.*

Petitioner's side-by-side figure does not support its argument that Benac's loading wheel and Koning's brush belt would work together to cause seeds to enter the brush belt in the same way as is described in the '955 patent. As shown in Figure 3 and explained in the Specification of the '955 patent,

> [t]he loading wheel is positioned . . . such that the path of the seeds on the disk brings the seeds into a nip 88 formed between the loading wheel and the distal ends 74 of the bristles 70. . . . The seeds are transferred from the seed meter to the delivery system as the seeds are brought by the disk into the nip 88. There the seeds are pinched off the seed disk between the loading wheel and the bristles 70 to remove the seed from the seed disk and seed meter.

Ex. 1001, 4:5–4:27. The loading wheel shown in Figure 3 of the '955 patent does not include paddles that are driven into and through the bristles of the brush belt. It does not, therefore, cause seeds to enter the brush belt in the same way as Petitioner proposes to do. The configuration of the components

in Figure 3 of the ’955 patent also does not present the same seed scooping problem as Patent Owner identifies in Petitioner’s proposed combination.

Petitioner also argues that Patent Owner’s arguments are based on the erroneous premise that an ordinarily skilled artisan must be able to physically combine the references. *See* Tr. 18:21–24; Reply 6–7 (citing *In re Mouttet*, 686 F.3d 1322, 1332–33 (Fed. Cir. 2012)). We disagree. Patent Owner is simply pointing out that an ordinarily skilled artisan would not have expected success in combining the references’ teachings in the way Petitioner proposes. Motivation to combine and reasonable expectation of success are properly assessed with reference to the combination as Petitioner has framed it. Doing so is not inconsistent with *Mouttet*. *See Samsung*, 925 F.3d at 1382–83 (“We will not fault the Board for analyzing Petitioners’ obviousness grounds in the way presented in the Petition.”).

c) Proposed Use of a Brush Belt to Capture Seeds Released from Above

Certain testimony of Mr. Prairie suggests that in the proposed combination, Benac’s paddle wheel only needs to cause the seeds to be released onto the brush belt, whereupon the brush belt itself captures the seeds. In his deposition, Mr. Prairie explained that “the teaching of Benac that—that I am utilizing is the teaching that a—this paddle wheel helps assure that the—to more reliably remove the seeds from the aperture in the vacuum seed disks to utilize his paddle wheel to do so.” Ex. 2263, 167:13–18. This testimony led to the following exchange:

> Q. Does the brush belt remove the seed, by capturing it?
>
> A. Yes, the Koning—my combination, the Koning brush belt alone removes by capture.
>
> Q. On that case, why do you need the paddle wheel if the seeds have already been removed?

> A. It's a—the seed is captured but ultimately seeds could still be adhered to the seed apertures at times. That's utilizing the teachings of Benac. And so with Benac, we're simply having—utilizing his device to help reassure and ultimately create a more reliable capturing of the seeds.

Id. at 170:6–17; *see also* Ex. 2193, 190:10–191:3 (Mr. Prairie explaining that the role of Benac's paddle wheel in the proposed combination is "to help assure removal of seed from the seed apertures"); *id.* at 207:12–17 (Mr. Prairie answering question about Benac's role by testifying that "Benac's paddlewheel sweeps the seeds as taught by Benac off of Hedderwick's seed disc and aids in the reliability of transfer to the location where Koning's brush belt would capture the seeds and convey them to the seed trench.").

That understanding, in which the paddle wheel simply releases the seeds and the brush belt captures them within its bristles, is difficult to square with Petitioner's explanations that in the proposed combination, "the paddle wheel would remove the seeds from the disc, and push the seeds through the intake opening into the bristles of Koning's brush belt." Pet. 40. A system in which seed is simply released by the paddle wheel to be captured by the brush belt also appears inconsistent with Petitioner's drawings of the proposed combination, which show Benac's paddle wheel rotating through Koning's brush belt. *Id.* at 67; *see also* Pet. Reply 25 ("A [person of ordinary skill in the art] would have understood that the paddle wheel could be placed immediately after the wear plate and still perform its function of inserting seed into the brush belt at the release position.").

But in any event, the alternative theory is also unpersuasive, as Petitioner has not met its burden of explaining adequately how or why a brush belt would capture seeds that are deposited on to it from above. Here

again, using a brush belt in that way is not simply applying a known technique in a known way, as Petitioner and Mr. Prairie contend. *See* Pet. 40–41; Ex. 1002 ¶¶ 70, 78. In Koning, the brush belt holds potatoes "lying on the conveying surface" so as to maintain the speed and relative position of potatoes as they are moved by the conveyor to the furrow. Ex. 1004, 3:16–24, 5:3–14, Fig. 4. Koning does not teach a system in which seeds are released from above and captured by a moving brush belt. Mr. Prairie's proposed use of a brush belt to capture seeds released from above essentially reverses the relative orientation of the brush belt in Koning, and Petitioner's arguments do not acknowledge that difference or explain why an ordinarily skilled artisan would have been motivated to adapt Koning's brush belt to such a use and reasonably expect success in doing so.

The persuasiveness of Mr. Prairie's testimony—i.e., that it would have been simple for an ordinarily skilled artisan to adapt Koning's brush belt for use in the proposed combination, where seeds released from above are captured by the brush belt—is further undermined by Mr. Prairie's testimony that he "can't recall a time where I've seen a seed being dropped into a brush belt." Ex. 2193, 113:5–9; *see also* Ex. 2263, 81:2–12 ("Q. And you never attempted to drop a seed onto a moving brush belt to see whether that would be inserted into the brush belt, correct? A. As I stated, for the purposes of this case, I did not do any physical experimentation with a moving brush belt as I didn't feel it was necessary. The prior art discloses sufficient information.") (objection omitted). Mr. Prairie has "had some industrial design projects where we've had to utilize brushes for various applications," but he "ha[s] not used a brush belt to convey seed." Ex. 2194, 297:6–16. Mr. Prairie testified that "prior to writing this declaration, brush

belt technology was not a specific area that I study, that I was researching." Ex. 2263, 79:6–9.

The basis for Mr. Prairie's opinion that a seed would be captured by a moving brush belt in the proposed combination appears to only be the prior art references themselves. Ex. 2193, 214:6–14, 118:7–23. Mr. Prairie testified that he "did not operate a brush belt for this declaration because [he] didn't feel it was necessary to make my assessments" and he "did not do study or experimentation on a brush belt as I did not feel it was necessary." Ex. 2263, 79:17–19, 80:2–4. Mr. Prairie's reliance on the prior art to support his conclusions is unpersuasive because Mr. Prairie does not account for the differences discussed above between the cited references' usage of brush belts and paddle wheels compared to the way those components are used in the proposed combination. In particular, as relevant to the discussion here, Koning does not teach using a brush belt to capture seeds that have been deposited or released from above. Mr. Prairie does not account for that difference by explaining why an ordinarily skilled artisan would expect Koning's brush belt to effectively capture and carry seeds released from above, as in the proposed combination.

In its Reply, Petitioner argues that "brush belts were well-known and used in many aspects of planting, so a POSITA would have had the knowledge necessary to make a brush belt work in Hedderwick's system without undue experimentation." Pet. Reply 8. To support this argument, Petitioner cites Koning and two other references: Thiemke[10] and Gould.[11] *See id.* at 9–11. In his declaration accompanying Petitioner's Reply,

[10] US 6,651,570 B1, issued Nov. 25, 2003 (Ex. 1015).
[11] US 1,376,933, issued May 3, 1921 (Ex. 1030).

Mr. Prairie discusses those same references. *See* Ex. 1135 ¶¶ 40–41. But these two additional references do little to aid Petitioner's case because neither Thiemke nor Gould discloses a brush belt that captures seeds released into it from above, as Petitioner proposes in its combination. Figures 3 and 4 of Thiemke are reproduced below:

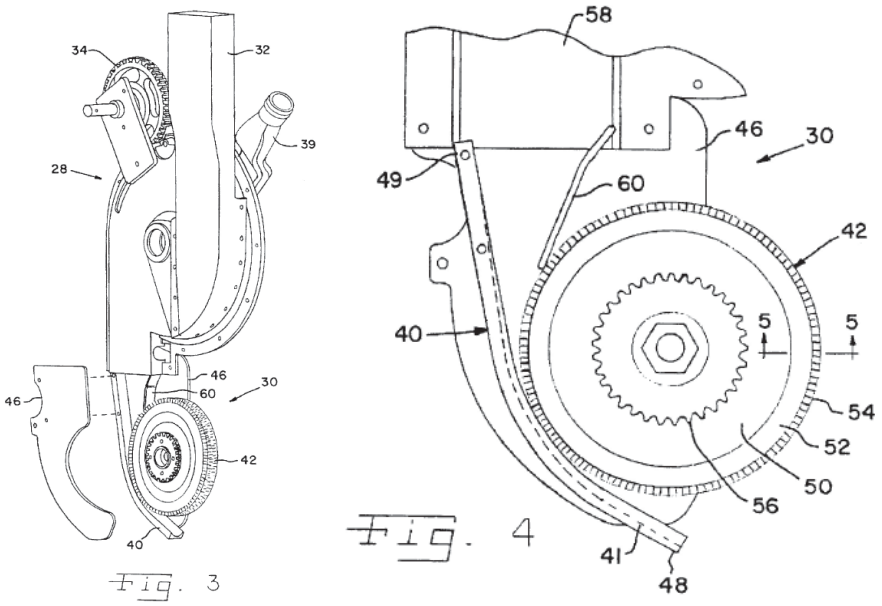

Figures 3 and 4 are perspective and side views, respectively, of a seed placement system. Ex. 1015, 3:5–9.

Thiemke explains that seeds discharged from seed metering system 28 are guided by deflector 60 into a nip area between wheel 42 and seed slide 40. *Id.* at 5:47–54. Thiemke teaches that a "gap of approximately one millimeter between the circumferential periphery of wheel 42 and seed slide 40 ensures that the seed is gripped by gripping outside layer 54," which can be formed of nylon bristles. *Id.* at 5:54–57, 5:1–10. Thiemke does not suggest that brush belts can capture seeds released from directly above; indeed, deflector 60 prevents seed from dropping onto the top of wheel 42 in a manner that would be comparable to how Petitioner proposes seed would be captured by Koning's brush belt in the proposed combination.

Gould describes a machine "for taking an individual plant from a quantity, depositing it positively in the ground and properly covering it, and of operating with great rapidity." Ex. 1030, 1:25–30. Figure 4 of Gould is reproduced below:

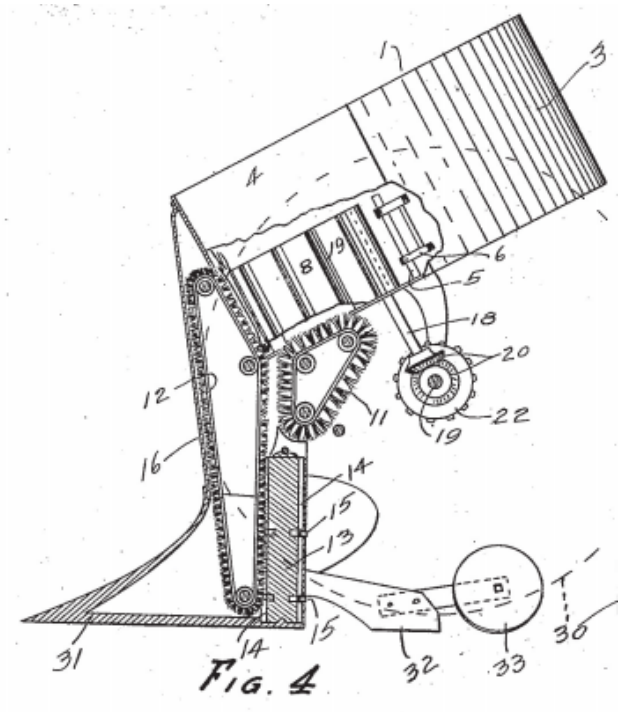

Figure 4 shows a sectional side elevation view of Gould's plant-setting machine. *Id.* at 1:38.

Gould explains that brush belt 11 operates beneath hopper 1 and "travels vertically downward . . . and cooperates with a second brush belt 12 to move the plant from the hopper." *Id.* at 1:75–82. In considering Gould's teaching of two vertically oriented and opposed brush belts that cooperate to move plants from a hopper, we see little relevance to Petitioner's proposal, in which seeds released from above enter into the bristles of a moving brush belt.

Thus, Petitioner's proposed combination uses Koning's brush belt in a way that materially differs from the way Koning uses its brush belt. Petitioner and Mr. Prairie contend that it would have been a simple matter

for an ordinarily skilled artisan to apply Koning's brush belt as proposed, but Mr. Prairie has never seen a brush belt used that way and has never attempted to do it. Mr. Prairie's basis for his testimony that using a brush belt as proposed would have been within the level of ordinary skill in the art is his review of the prior art, but Petitioner provides no prior art reference that shows a brush belt capturing seed that is released from directly above. In our view, Petitioner's showing that an ordinarily skilled artisan would have been motivated to use Koning's brush belt in the proposed manner, and would have reasonably expected success in doing so, is conjectural and unpersuasive.

Patent Owner further undermines Petitioner's case with its evidence of the difficulties that ordinarily skilled artisans would have expected to face in attempting to release seeds into a moving brush belt. *See* PO Resp. 25–33. Patent Owner's expert, Dr. Glancey, testifies that an ordinarily skilled artisan "would have been discouraged from attempting to combine Koning's belt with brush hairs with Hedderwick due to the significant real-world engineering challenges that would prevent or frustrate such a modification." Ex. 2202 ¶ 165. In particular, Dr. Glancey explains that in a brush belt moving at a conventional speed, the brush tips "resemble a fluid medium with surface tension properties," which "mak[es] it more difficult to insert an object into the moving brush hairs." *Id.* ¶ 167. According to Dr. Glancey, this surface tension in the brush hairs resists engagement of seeds into moving bristles and causes seeds to "float" or "surf" on the brush hair tips, which creates spacing and timing problems that would have discouraged using a brush belt in the manner Petitioner proposes. *Id.* ¶¶ 168–169. Dr. Glancey cites video of seeds being dropped onto moving brush belts that exhibit this effect. *Id.* (citing Ex. 2186; Ex. 2187; Ex. 2141).

Dr. Glancey further testifies that ordinarily skilled artisans attempting to insert seed into a moving brush belt would have been likely to encounter seed jamming problems when the seed fails to embed itself in the brush hairs and causes a pile-up effect that disrupts loading of subsequent seeds. *Id.* ¶¶ 171–173 (citing Ex. 2143; Ex. 2198). Dr. Glancey also testifies that brush belts' susceptibility to environmental damage would have discouraged their use in Petitioner's proposed combination. *Id.* ¶¶ 174–177.

Petitioner and Mr. Prairie criticize Dr. Glancey's videos as "not a reliable indication of how Koning's brush belt would operate in Hedderwick's system." Pet. Reply 11; *see* Ex. 1135 ¶ 49 (Mr. Prairie testifying that "Deere's 'experiments' are not scientifically reliable"). Petitioner points out that in his deposition, Dr. Glancey was unable to provide certain information about the creation of the videos or the characteristics of the brush belt in the videos. Pet. Reply 11–12 (citing Ex. 1114, 136:6–143:12, 147:7–155:17); *see also* Ex. 1135 ¶¶ 46–52 (Mr. Prairie making same points). These criticisms undercut the videos' value as experimental evidence of how a brush belt would behave in circumstances that replicate the proposed combination, but the videos still serve as real-world illustrations of Dr. Glancey's testimony regarding the kinds of phenomena that ordinarily skilled artisan would encounter when seeking to use a moving bristle brush to capture seed released from above. Aside from attacking Dr. Glancey's videos, Petitioner and Mr. Prairie do not address Dr. Glancey's broader point that brush belts can suffer from seed surfing, jamming, and degradation issues, and that these considerations would have dissuaded an ordinarily skilled artisan from the proposed combination. Moreover, although Petitioner and Mr. Prairie are critical of Dr. Glancey's videos as demonstrations of how the proposed combination

would work, Petitioner did not present, and Mr. Prairie did not conduct, any experiments or other kinds of physical demonstrations of their own. *See* Ex. 2263, 79:17–19, 80:2–4, 81:2–12.

3. Conclusion Regarding Claim 1

Petitioner has the burden to show that ordinarily skilled artisans would have been motivated to combine the references in the proposed manner and would have reasonably expected success in doing so. Petitioner's argument that the proposed combination merely applies known techniques in known ways is simplistic and unpersuasive, because it does not acknowledge or adequately account for the differences between how paddle wheels and endless members in the form of brush belts are used in the cited references versus in the proposed combination. Moreover, Patent Owner has identified and explained specific problems that would be expected to arise when the references are combined in the manner Petitioner proposes. Petitioner does not offer persuasive evidence that these problems would not occur nor explanation of how an ordinarily skilled artisan would prevent them. For these reasons, we are not persuaded that an ordinarily skilled artisan would have been motivated to combine the references as Petitioner proposes, and would have reasonably expected success in doing so.

We conclude that Petitioner has not demonstrated by a preponderance of the evidence that claim 1 would have been obvious over Hedderwick, Koning, and Benac.

D. Claims 8 and 16

Independent claims 8 and 16 include limitations similar to claim 1. *See* Ex. 1001, 8:24–41, 8:65–9:9. As relevant here, Petitioner's contentions regarding claims 8 and 16 are similar to those discussed above for claim 1. *See* Pet. 74–76, 80–82. In particular, Petitioner does not offer any

arguments regarding motivation or reasonable expectation of success for claims 8 or 16 beyond those discussed above for claim 1. *See id.* The shortcomings of Petitioner's showing on motivation and reasonable expectation of success discussed above in connection with claim 1 are equally applicable to Petitioner's challenge to claims 8 and 16. Accordingly, we determine that Petitioner has not demonstrated by a preponderance of the evidence that claims 8 and 16 would have been obvious over Hedderwick, Koning, and Benac.

E. Claims 2–7, 10, 12–15, 17, 19, and 20

Claims 2–7 depends from claim 1, claims 10 and 12–15 depend from claim 8, and claims 17, 19, and 20 depend from claim 16. *See* Ex. 1001, 8:5–9:20. Petitioner's arguments regarding these dependent claims do not remedy the shortcomings discussed above with respect to claims 1, 8, and 16. *See* Pet. 68–74, 78–80, 82–83. Thus, Petitioner's challenges to claims 2–7, 10, 12–15, 17, 19, and 20 are also unpersuasive. *See Mylan Pharms. Inc. v. Research Corp. Techs., Inc.*, 914 F.3d 1366, 1376 (Fed. Cir. 2019) ("Dependent claims, with added limitations, are generally not obvious when their parent claims are not.") (citing *W.L. Gore & Assocs., Inc., v. Garlock, Inc.*, 721 F.2d 1540, 1555 (Fed. Cir. 1983)); *see also Adidas*, 963 F.3d at 1359 ("Because the Unitary Construction Claims depend from the independent Base Claims, we conclude that substantial evidence supports [the Board's] motivation to combine findings with respect to the Unitary Construction Claims.").

VI. CONSTITUTIONAL CHALLENGE

In a single sentence, Patent Owner states it "challenges the constitutionality of, and the panel's authority to adjudicate, this proceeding under *Arthrex, Inc. v. Smith & Nephew Inc.*, 941 F.3d 1320 (Fed. Cir.

2019)." P.O. Resp. 98.[12] No additional argument or explanation of Patent Owner's challenge is presented.

This constitutional issue has been addressed by the Federal Circuit's decision in *Arthrex*, 941 F.3d at 1337 ("This as-applied severance . . . cures the constitutional violation."); *see also Arthrex, Inc. v. Smith & Nephew, Inc.*, 953 F.3d 760, 764 (Fed. Cir. 2020) (Moore, J., concurring in denial of rehearing) ("Because the APJs were constitutionally appointed as of the implementation of the severance, *inter partes* review decisions going forward were no longer rendered by unconstitutional panels."). Accordingly, we do not consider this issue any further for this Decision.

VII. CONCLUSION

The outcome for the challenged claims in this proceeding is set forth below. In summary:

Claims	35 U.S.C. §	References	Claims Shown Unpatentable	Claims Not Shown Unpatentable
1–8, 10, 12–17, 19, 20	103	Hedderwick, Koning, Benac		1–8, 10, 12–17, 19, 20

VIII. ORDER

In consideration of the foregoing, it is hereby:

ORDERED that claims 1–8, 10, 12–17, 19, and 20 have not been proven by a preponderance of the evidence to be unpatentable;

[12] We note that the Supreme Court has accepted this case for review. *Arthrex, Inc. v. Smith & Nephew, Inc.*, 941 F.3d 1320 (Fed. Cir. 2019), *cert. granted sub nom. United States v. Arthrex, Inc.*, 2020 WL 6037206 (Oct. 13, 2020).

FURTHER ORDERED that Petitioner's Motion to Exclude is denied in part and dismissed in part;

FURTHER ORDERED that Patent Owner's Motion to Exclude is dismissed; and

FURTHER ORDERED that, because this is a final written decision, parties to this proceeding seeking judicial review of our Decision must comply with the notice and service requirements of 37 C.F.R. § 90.2.

FOR PETITIONER:

Grant Rowan
Mary Sooter
Natalie Pous
R. Gregory Israelsen
WILMER, CUTLER, PICKERING, HALE AND DORR, LLP
grant.rowan@wilmerhale.com
mindy.sooter@wilmerhale.com
natalie.pous@wilmerhale.com
greg.israelsen@wilmerhale.com

FOR PATENT OWNER:

Jay Alexander
Peter Chen
Nicholas L. Evoy
Rajesh Paul
Richard Rainey
COVINGTON & BURLING LLP
jalexander@cov.com
pchen@cov.com
nevoy@cov.com
rpaul@cov.com
rrainey@cov.com