US006957350B1

(12) **United States Patent**
Demos

(10) **Patent No.: US 6,957,350 B1**
(45) **Date of Patent: Oct. 18, 2005**

(54) **ENCRYPTED AND WATERMARKED TEMPORAL AND RESOLUTION LAYERING IN ADVANCED TELEVISION**

(75) Inventor: **Gary A. Demos**, Culver City, CA (US)

(73) Assignee: **Dolby Laboratories Licensing Corporation**, San Francisco, CA (US)

(*) Notice: Subject to any disclaimer, the term of this patent is extended or adjusted under 35 U.S.C. 154(b) by 0 days.

(21) Appl. No.: **09/541,701**

(22) Filed: **Apr. 3, 2000**

Related U.S. Application Data

(63) Continuation-in-part of application No. 09/442,595, filed on Nov. 17, 1999, now abandoned, which is a continuation of application No. 09/217,151, filed on Dec. 21, 1998, now Pat. No. 5,988,863, which is a continuation of application No. 08/594,815, filed on Jan. 30, 1996, now Pat. No. 5,852,565.

(51) **Int. Cl.**[7] **H04N 7/167**
(52) **U.S. Cl.** **713/203**; 380/201; 380/203; 360/60; 369/84; 705/57
(58) **Field of Search** 380/201, 203; 360/60; 369/84; 705/57; 375/240.1, 240.11, 375/240.25; 348/429.1, 477

(56) **References Cited**

U.S. PATENT DOCUMENTS

5,742,343	A *	4/1998	Haskell et al.	375/240.15
6,069,914	A	5/2000	Cox	
6,236,727	B1 *	5/2001	Ciacelli et al.	380/212
6,332,194	B1	12/2001	Bloom et al.	
2001/0028725	A1 *	10/2001	Nakagawa	382/100

OTHER PUBLICATIONS

Larry Bloomfield, Copy Protection—deja Vu, Broadcast Engineering, Oct. 1998, vol. 40, Iss. 11, p. 14, 2pages.*

Janet Pinkerton, Dealscope Consumer Marketplace, Philadelphia, Jan. 1999, vol. 41, Iss. 1, p. 32, 1 pgs.*

Demos, Gary A. "Temporal and resolution layering in advanced television." DemoGraFX Coporation, Nov. 27, 1995, pp. 4-12.

Demos, Gary A. "A comparision of hierarchical high definition imagery coding schema." DemoGraFX Coporation, 1992 IEEE, pp. 68-74.

* cited by examiner

Primary Examiner—Ayaz Sheikh
Assistant Examiner—Taghi T. Arani
(74) *Attorney, Agent, or Firm*—Fish & Richardson P.C.

(57) **ABSTRACT**

A method and apparatus for image compression using temporal and resolution layering of compressed image frames, and which provides encryption and watermarking capabilities. In particular, layered compression allows a form of modularized decomposition of an image that supports flexible encryption and watermarking techniques. Using layered compression, the base layer and various internal components of the base layer can be used to encrypt a compressed layered movie data stream. By using such a layered subset of the bits, the entire picture stream can be made unrecognizable by encrypting only a small fraction of the bits of the entire stream. A variety of encryption algorithms and strengths can be applied to various portions of the layered stream, including enhancement layers. Encryption algorithms or keys can be changed at each slice boundary as well, to provide greater intertwining of the encryption and the picture stream. Watermarking tracks lost or stolen copies back to the source, so that the nature of the method of theft can be determined and so that those involved in a theft can be identified. Watermarking preferably uses low order bits in certain coefficients in certain frames of a layered compression movie stream to provide reliable identification while being invisible or nearly invisible to the eye. An enhancement layer can also have its own unique identifying watermark structure.

39 Claims, 10 Drawing Sheets

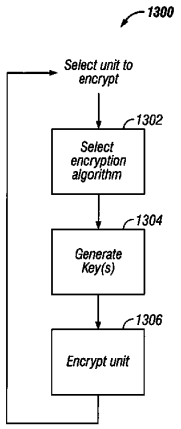

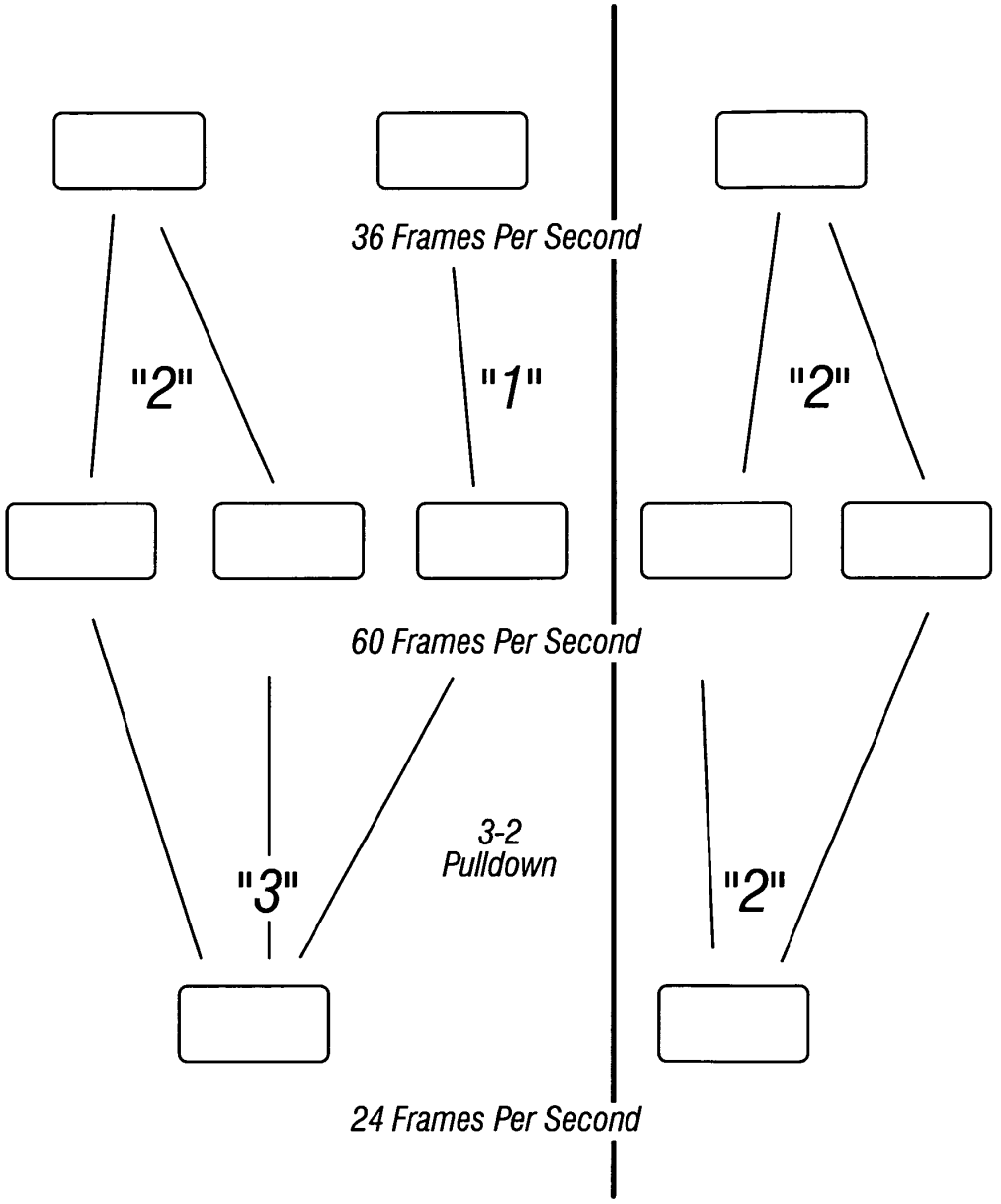
36 Frames Per Second
"2"
"1"
"2"
60 Frames Per Second
3-2
Pulldown
"3"
"2"
24 Frames Per Second

FIG. 1

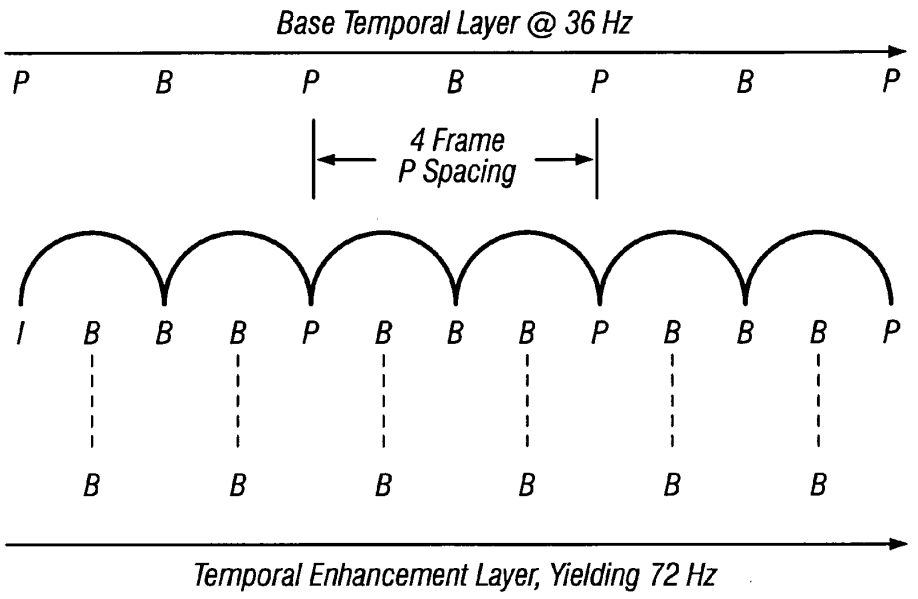
Base Temporal Layer @ 36 Hz
P B P B P B P
4 Frame
P Spacing
I B B B P B B B P B B B P
B B B B B B
Temporal Enhancement Layer, Yielding 72 Hz

FIG. 2

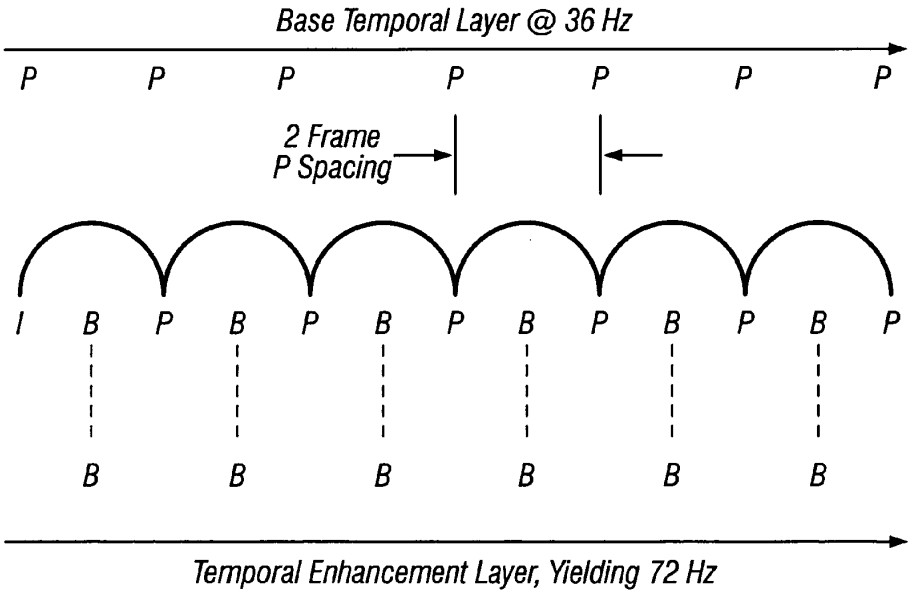
Base Temporal Layer @ 36 Hz
P P P P P P P
2 Frame
P Spacing
I B P B P B P B P B P B P
B B B B B B
Temporal Enhancement Layer, Yielding 72 Hz

FIG. 3

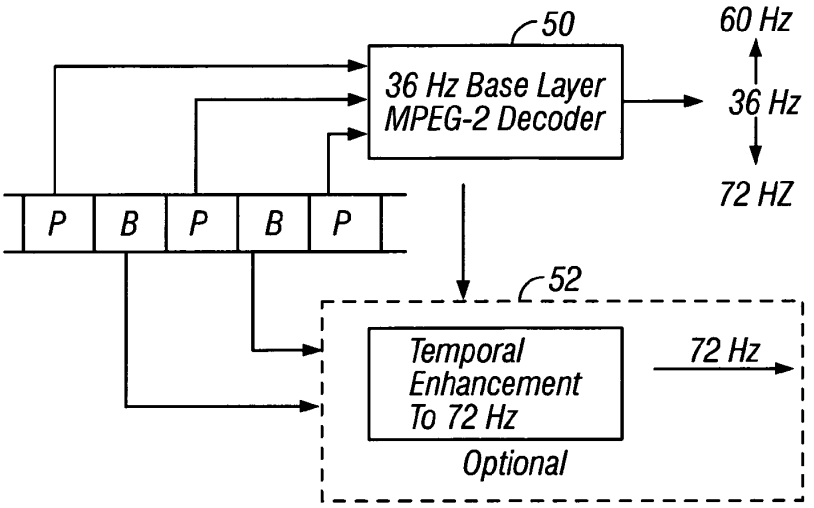
50
36 Hz Base Layer
MPEG-2 Decoder
60 Hz
36 Hz
72 HZ
P
B
P
B
P
52
Temporal
Enhancement
To 72 Hz
72 Hz
Optional

FIG. 4

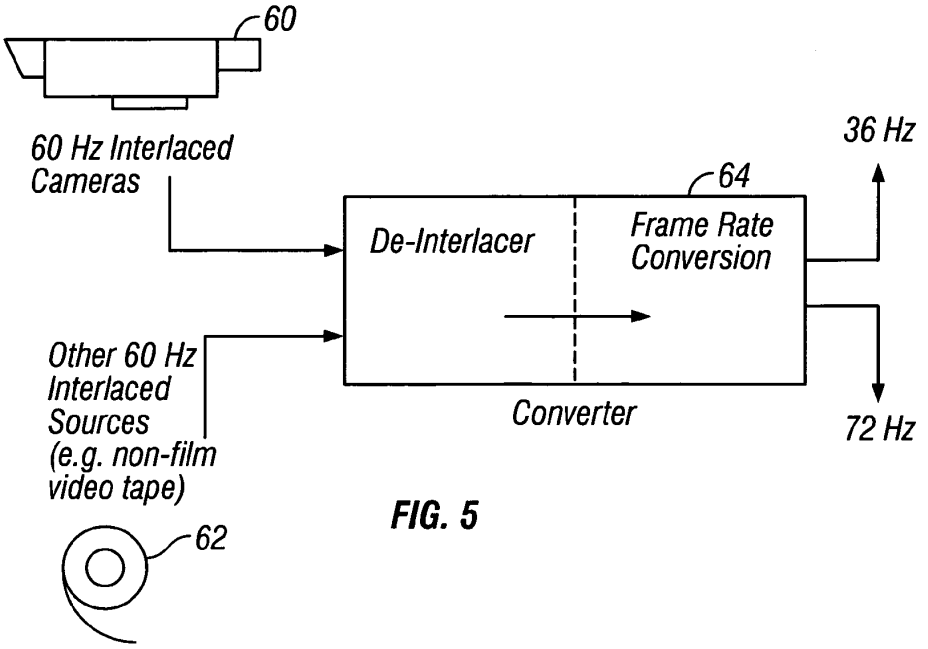
60
60 Hz Interlaced
Cameras
36 Hz
64
De-Interlacer
Frame Rate
Conversion
Other 60 Hz
Interlaced
Sources
(e.g. non-film
video tape)
Converter
72 Hz
62

FIG. 5

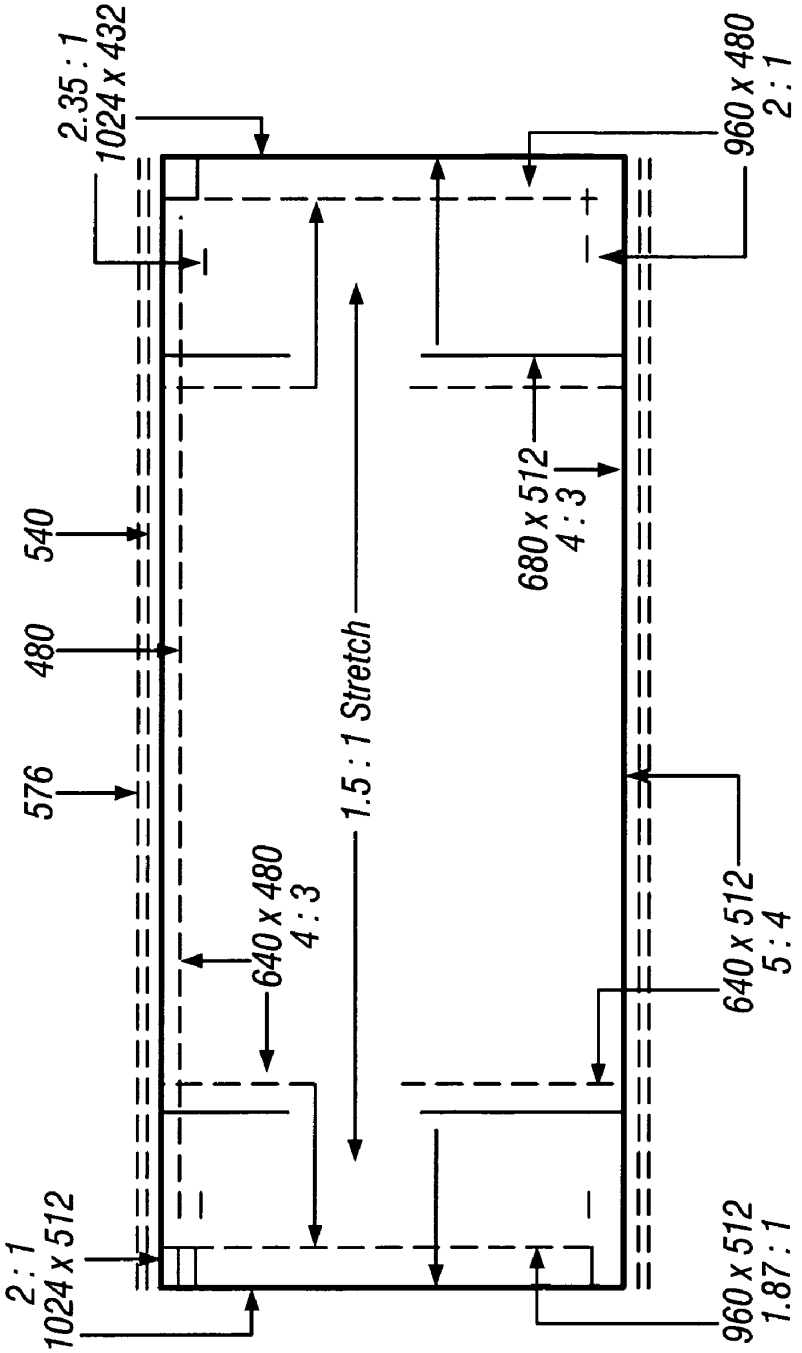
2.35 : 1
1024 x 432
960 x 480
2 : 1
540
480
576
680 x 512
4 : 3
1.5 : 1 Stretch
640 x 480
4 : 3
640 x 512
5 : 4
2 : 1
1024 x 512
960 x 512
1.87 : 1

FIG. 6

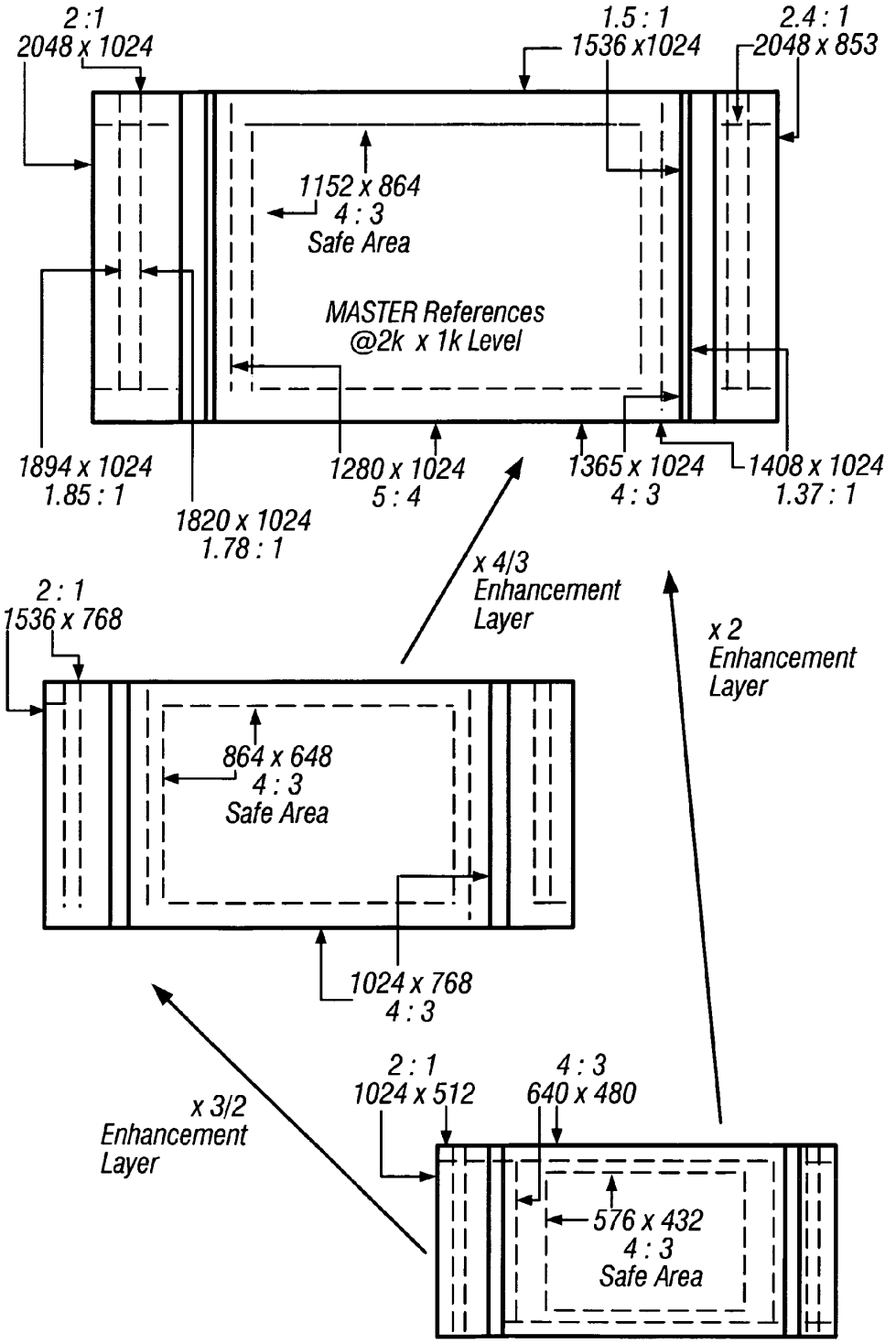
2 :1
2048 x 1024
1.5 : 1
1536 x1024
2.4 : 1
2048 x 853
1152 x 864
4 : 3
Safe Area
MASTER References
@2k x 1k Level
1894 x 1024
1.85 : 1
1820 x 1024
1.78 : 1
1280 x 1024
5 : 4
1365 x 1024
4 : 3
1408 x 1024
1.37 : 1
x 4/3
Enhancement
Layer
x 2
Enhancement
Layer
2 : 1
1536 x 768
864 x 648
4 : 3
Safe Area
1024 x 768
4 : 3
x 3/2
Enhancement
Layer
2 : 1
1024 x 512
4 : 3
640 x 480
576 x 432
4 : 3
Safe Area

FIG. 7

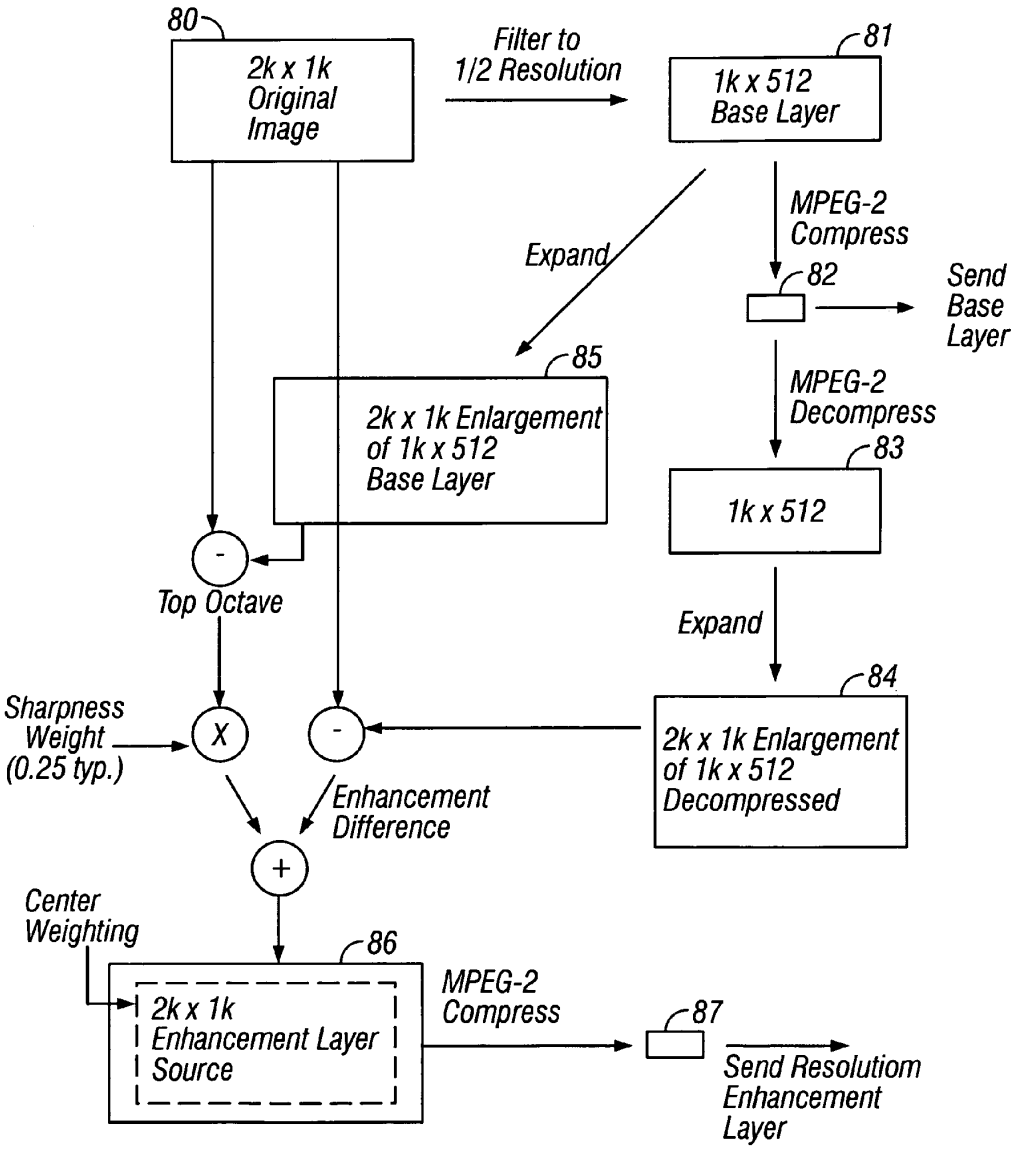
80
2k x 1k Original Image
Filter to 1/2 Resolution
81
1k x 512 Base Layer
MPEG-2 Compress
82
Send Base Layer
Expand
85
2k x 1k Enlargement of 1k x 512 Base Layer
MPEG-2 Decompress
83
1k x 512
Top Octave
Expand
84
2k x 1k Enlargement of 1k x 512 Decompressed
Sharpness Weight (0.25 typ.)
Enhancement Difference
Center Weighting
86
2k x 1k Enhancement Layer Source
MPEG-2 Compress
87
Send Resolutiom Enhancement Layer

FIG. 8

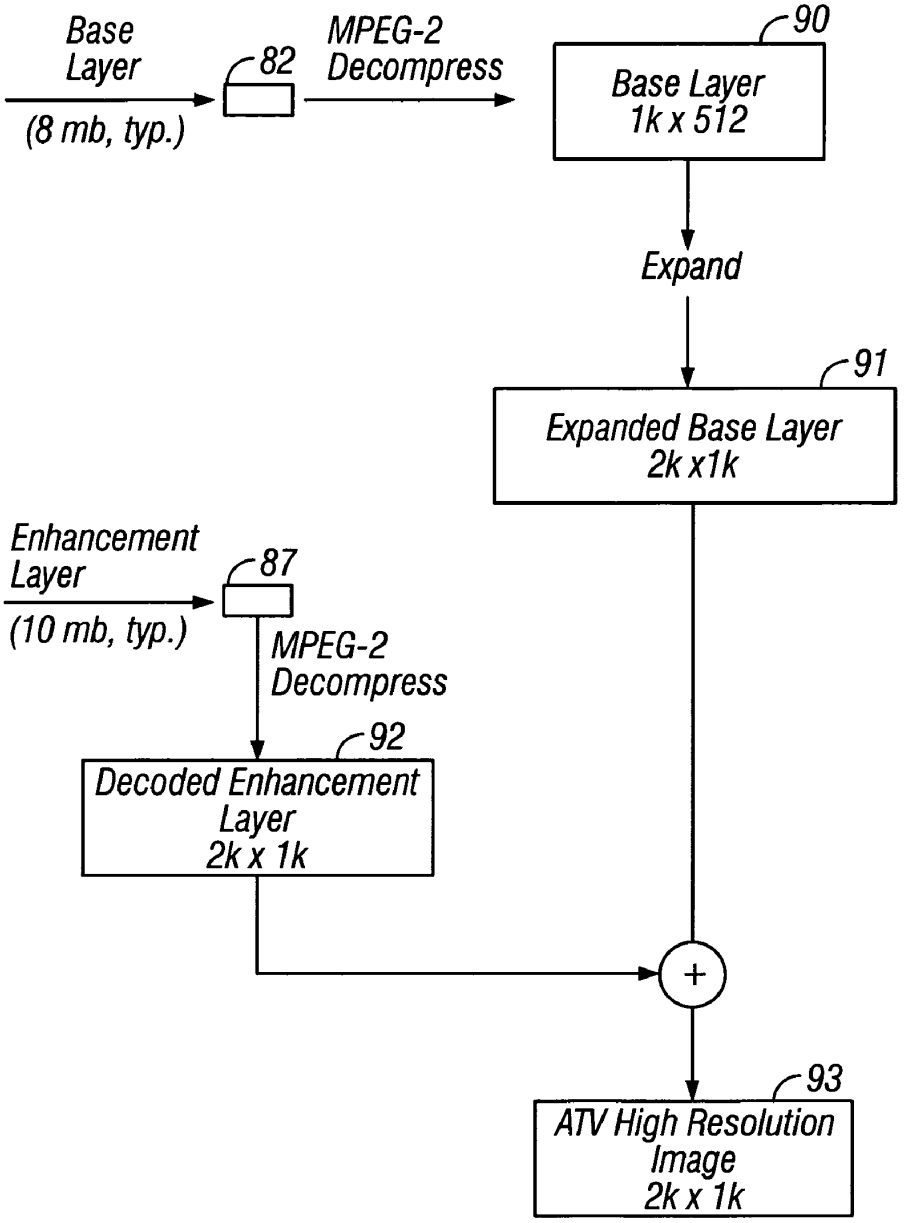
Base
Layer
(8 mb, typ.)
82
MPEG-2
Decompress
90
Base Layer
1k x 512
Expand
91
Expanded Base Layer
2k x1k
Enhancement
Layer
(10 mb, typ.)
87
MPEG-2
Decompress
92
Decoded Enhancement
Layer
2k x 1k
+
93
ATV High Resolution
Image
2k x 1k

FIG. 9

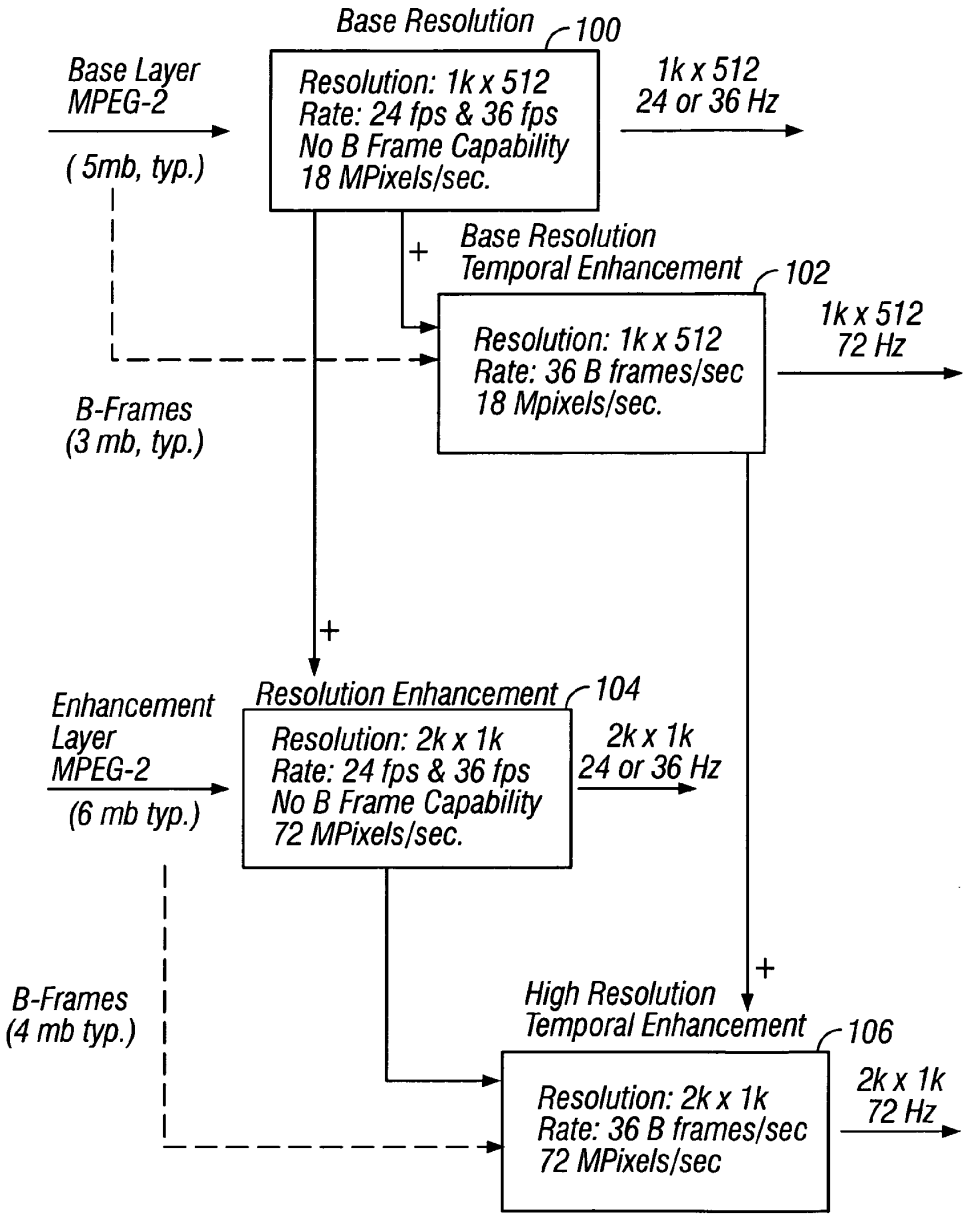
Base Resolution
100
Base Layer
MPEG-2
(5mb, typ.)
Resolution: 1k x 512
Rate: 24 fps & 36 fps
No B Frame Capability
18 MPixels/sec.
1k x 512
24 or 36 Hz
+
Base Resolution
Temporal Enhancement
102
Resolution: 1k x 512
Rate: 36 B frames/sec
18 Mpixels/sec.
1k x 512
72 Hz
B-Frames
(3 mb, typ.)
+
Resolution Enhancement
104
Enhancement
Layer
MPEG-2
(6 mb typ.)
Resolution: 2k x 1k
Rate: 24 fps & 36 fps
No B Frame Capability
72 MPixels/sec.
2k x 1k
24 or 36 Hz
+
B-Frames
(4 mb typ.)
High Resolution
Temporal Enhancement
106
Resolution: 2k x 1k
Rate: 36 B frames/sec
72 MPixels/sec
2k x 1k
72 Hz

FIG. 10

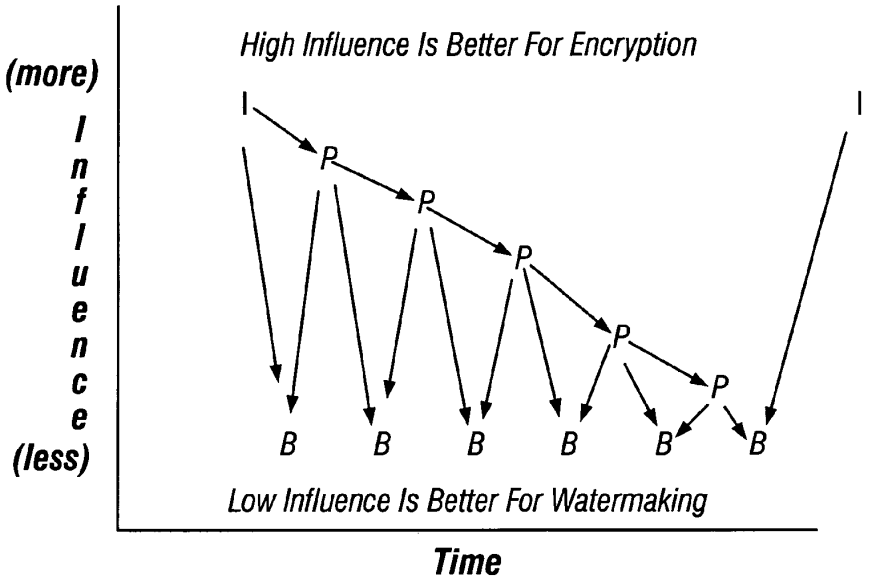

FIG. 11

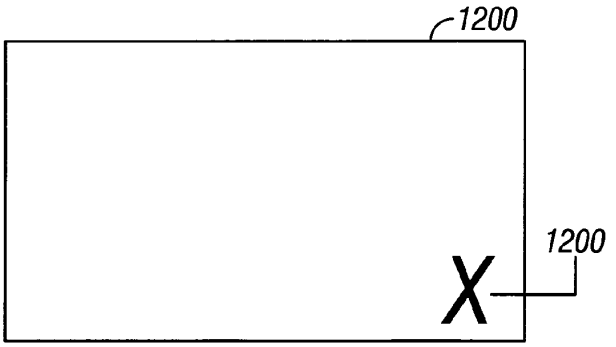

FIG. 12A

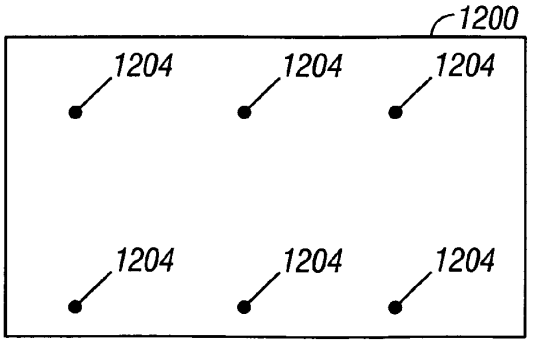

FIG. 12B

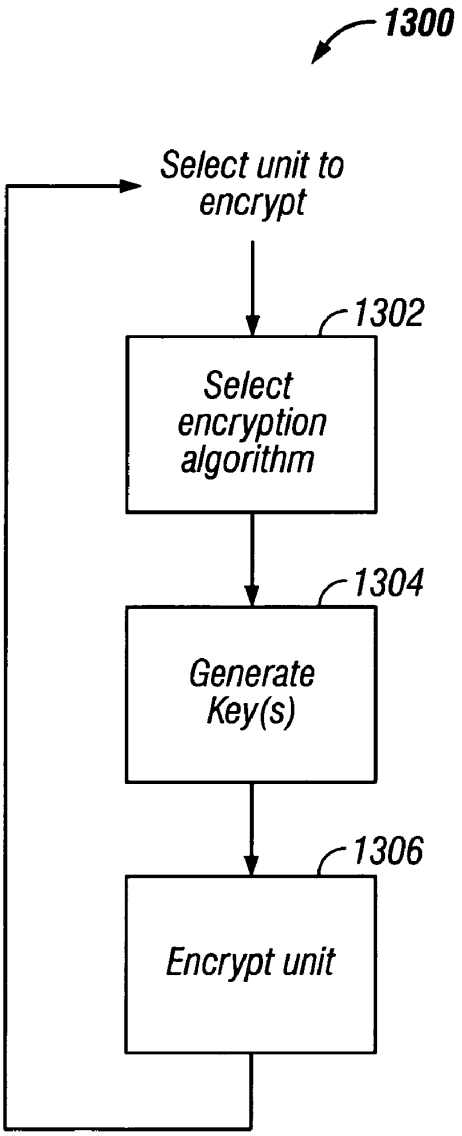
1300
Select unit to encrypt
1302
Select encryption algorithm
1304
Generate Key(s)
1306
Encrypt unit

FIG. 13

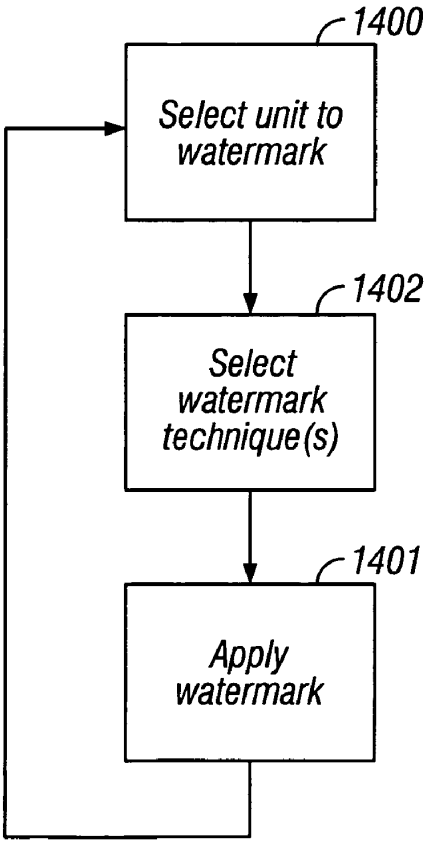
1400
Select unit to watermark
1402
Select watermark technique(s)
1401
Apply watermark

FIG. 14

ENCRYPTED AND WATERMARKED TEMPORAL AND RESOLUTION LAYERING IN ADVANCED TELEVISION

CROSS-REFERENCE TO RELATED APPLICATIONS

This application is a continuation-in-part application of and claims priority to U.S. application Ser. No. 09/442,595 filed on Nov. 17, 1999, now abnd., which was a continuation of U.S. application Ser. No. 09/217,151 filed on Dec. 21, 1998, now U.S. Pat. No. 5,988,863, which was a continuation of U.S. application Ser. No. 08/594,815 filed Jan. 30, 1996, (now U.S. Pat. No. 5,852,565, issued Dec. 22, 1998).

TECHNICAL FIELD

This invention relates to electronic communication systems, and more particularly to an advanced electronic television system having temporal and resolution layering of compressed image frames, and which provides encryption and watermarking capabilities.

BACKGROUND

The United States presently uses the NTSC standard for television transmissions. However, proposals have been made to replace the NTSC standard with an Advanced Television standard. For example, it has been proposed that the U.S. adopt digital standard-definition and advanced television formats at rates of 24 Hz, 30 Hz, 60 Hz, and 60 Hz interlaced. It is apparent that these rates are intended to continue (and thus be compatible with) the existing NTSC television display rate of 60 Hz (or 59.94 Hz). It is also apparent that "3-2 pulldown" is intended for display on 60 Hz displays when presenting movies, which have a temporal rate of 24 frames per second (fps). However, while the above proposal provides a menu of possible formats from which to select, each format only encodes and decodes a single resolution and frame rate. Because the display or motion rates of these formats are not integrally related to each other, conversion from one to another is difficult.

Further, this proposal does not provide a crucial capability of compatibility with computer displays. These proposed image motion rates are based upon historical rates which date back to the early part of this century. If a "clean-slate" were to be made, it is unlikely that these rates would be chosen. In the computer industry, where displays could utilize any rate over the last decade, rates in the 70 to 80 Hz range have proven optimal, with 72 and 75 Hz being the most common rates. Unfortunately, the proposed rates of 30 and 60 Hz lack useful interoperability with 72 or 75 Hz, resulting in degraded temporal performance.

In addition, it is being suggested by some in the field that frame interlace is required, due to a claimed need to have about 1000 lines of resolution at high frame rates, but based upon the notion that such images cannot be compressed within the available 18–19 mbits/second of a conventional 6 MHz broadcast television channel.

It would be much more desirable if a single signal format were to be adopted, containing within it all of the desired standard and high definition resolutions. However, to do so within the bandwidth constraints of a conventional 6 MHz broadcast television channel requires compression (or "scalability") of both frame rate (temporal) and resolution (spatial). One method specifically intended to provide for such scalability is the MPEG-2 standard. Unfortunately, the temporal and spatial scalability features specified within the MPEG-2 standard are not sufficiently efficient to accommodate the needs of advanced television for the U.S. Thus, the proposal for advanced television for the U.S. is based upon the premise that temporal (frame rate) and spatial (resolution) layering are inefficient, and therefore discrete formats are necessary.

In addition to the above issues, the inventor has identified a need to protect and manage the use of valuable copyrighted audio and video media such as digital movies. The viability of entire technologies for movie data delivery can hinge on the ability to protect and manage usage. As the quality of digital compressed movie masters approaches that of the original work, the need for protection and management methodologies becomes a crucial requirement.

In approaching a system architecture for digital content protection and management, it would be very beneficial to have a variety of tools and techniques which can be applied in a modular and flexible way. Most commercial encryption systems have been eventually compromised. It is therefore necessary to architect any protection system to be sufficiently flexible as to adapt and strengthen itself if and when it is compromised. It is also valuable to place informational clues into each copy via watermarking of symbols and/or serial number information in order to pinpoint the source and method by which the security has been compromised.

Movie distribution digitally to movie theaters is becoming feasible. The high value copies of new movies have long been a target for theft or copying of today's film prints. Digital media such as DVD have attempted crude encryption and authorization schemes (such as DIVX). Analog cable scramblers have been in use from the beginning to enable charging for premium cable channels and pay-per-view events and movies. However these crude scramblers have been broadly compromised.

One reason that digital and analog video systems have tolerated such poor security systems is that the value of the secondary video release and the loss due to pirating is a relatively small proportion of the market. However, for digital first-run movies, for valuable live events, and for high resolution images to the home and business (via forms of HDTV), robust security systems become a requirement.

The present invention overcomes these and other problems of current digital content protection systems.

SUMMARY

The present invention provides a method and apparatus for image compression which demonstrably achieves better than 1000-line resolution image compression at high frame rates with high quality. It also achieves both temporal and resolution scalability at this resolution at high frame rates within the available bandwidth of a conventional television broadcast channel. The inventive technique efficiently achieves over twice the compression ratio being proposed for advanced television while providing for flexible encryption and watermarking techniques.

Image material is preferably captured at an initial or primary framing rate of 72 fps. An MPEG-2 data stream is then generated, comprising:

(1) a base layer, preferably encoded using only MPEG-2 P frames, comprising a low resolution (e.g., 1024×512 pixels), low frame rate (24 or 36 Hz) bitstream;

(2) an optional base resolution temporal enhancement layer, encoded using only MPEG-2 B frames, comprising a low resolution (e.g., 1024×512 pixels), high frame rate (72 Hz) bitstream;

(3) an optional base temporal high resolution enhancement layer, preferably encoded using only MPEG-2 P frames, comprising a high resolution (e.g., 2k×1k pixels), low frame rate (24 or 36 Hz) bitstream;

(4) an optional high resolution temporal enhancement layer, encoded using only MPEG-2 B frames, comprising a high resolution (e.g., 2k×1k pixels), high frame rate (72 Hz) bitstream.

The invention provides a number of key technical attributes, allowing substantial improvement over current proposals, and including: replacement of numerous resolutions and frame rates with a single layered resolution and frame rate; no need for interlace in order to achieve better than 1000-lines of resolution for 2 megapixel images at high frame rates (72 Hz) within a 6 MHz television channel; compatibility with computer displays through use of a primary framing rate of 72 fps; and greater robustness than the current unlayered format proposal for advanced television, since all available bits may be allocated to a lower resolution base layer when "stressful" image material is encountered.

The disclosed layered compression technology allows a form of modularized decomposition of an image. This modularity has additional benefits beyond allowing scalable decoding and better stress resilience. The modularity can be further tapped as a structure which supports flexible encryption and watermarking techniques. The function of encryption is to restrict viewing, performance, copying, or other use of audio/video shows unless one or more proper keys are applied to an authorized decryption system. The function of watermarking is to track lost or stolen copies back to a source, so that the nature of the method of theft can be determined to improve the security of the system, and so that those involved in the theft can be identified.

Using layered compression, the base layer, and various internal components of the base layer (such as I frames and their DC coefficients, or motion vectors for P frames) can be used to encrypt a compressed layered movie stream. By using such a layered subset of the bits, the entire picture stream can be made unrecognizable (unless decrypted) by encrypting only a small fraction of the bits of the entire picture stream. Further, a variety of encryption algorithms and strengths can be applied to various portions of the layered stream, including the enhancement layers (which can be seen as a premium quality service, and encrypted specially). Encryption algorithms or keys can be changed at each slice boundary as well, to provide greater intertwining of the encryption and the image stream.

The inventive layered compression structure can also be used for watermarking. The goal of watermarking is to be reliably identifiable to detection, yet be essentially invisible to the eye. For example, low order bits in DC coefficients in I frames would be invisible to the eye, but yet could be used to uniquely identify a particular picture stream with a watermark. Enhancement layers can also have their own unique identifying watermark structure.

The details of one or more embodiments of the invention are set forth in the accompanying drawings and the description below. Other features, objects, and advantages of the invention will be apparent from the description and drawings, and from the claims.

DESCRIPTION OF DRAWINGS

FIG. **1** is a timing diagram showing the pulldown rates for 24 fps and 36 fps material to be displayed at 60 Hz.

FIG. **2** is a first preferred MPEG-2 coding pattern.

FIG. **3** is a second preferred MPEG-2 coding pattern.

FIG. **4** is a block diagram showing temporal layer decoding in accordance with the preferred embodiment of the present invention.

FIG. **5** is a block diagram showing 60 Hz interlaced input to a converter that can output both 36 Hz and 72 Hz frames.

FIG. **6** is a diagram showing a "master template" for a base MPEG-2 layer at 24 or 36 Hz.

FIG. **7** is a diagram showing enhancement of a base resolution template using hierarchical resolution scalability utilizing MPEG-2.

FIG. **8** is a diagram showing the preferred layered resolution encoding process.

FIG. **9** is a diagram showing the preferred layered resolution decoding process.

FIG. **10** is a block diagram showing a combination of resolution and temporal scalable options for a decoder in accordance with the present invention.

FIG. **11** is a diagram showing the scope of encryption and watermarking as a function of unit dependency.

FIGS. **12**A and **12**B show diagrams of image frames with different types of watermarks.

FIG. **13** is a flowchart showing one method of applying the encryption techniques of the invention.

FIG. **14** is a flowchart showing one method of applying the watermarking techniques of the invention.

Like reference symbols in the various drawings indicate like elements.

DETAILED DESCRIPTION

Throughout this description, the preferred embodiment and examples shown should be considered as exemplars, rather than as limitations on the present invention.

Temporal and Resolution Layering

Goals of a Temporal Rate Family

After considering the problems of the prior art, and in pursuing the present invention, the following goals were defined for specifying the temporal characteristics of a future digital television system:

- Optimal presentation of the high resolution legacy of 24 frame-per-second films.
- Smooth motion capture for rapidly moving image types, such as sports.
- Smooth motion presentation of sports and similar images on existing analog NTSC displays, as well as computer-compatible displays operating at 72 or 75 Hz.
- Reasonable but more efficient motion capture of less-rapidly-moving images, such as news and live drama.
- Reasonable presentation of all new digital types of images through a converter box onto existing NTSC displays.
- High quality presentation of all new digital types of images on computer-compatible displays.
- If 60 Hz digital standard or high resolution displays come into the market, reasonable or high quality presentation on these displays as well.

Since 60 Hz and 72/75 Hz displays are fundamentally incompatible at any rate other than the movie rate of 24 Hz, the best situation would be if either 72/75 or 60 were eliminated as a display rate. Since 72 or 75 Hz is a required rate for N.I.I. (National Information Infrastructure) and computer applications, elimination of the 60 Hz rate as being fundamentally obsolete would be the most future-looking. However, there are many competing interests within the

broadcasting and television equipment industries, and there is a strong demand that any new digital television infrastructure be based on 60 Hz (and 30 Hz). This has lead to much heated debate between the television, broadcast, and computer industries.

Further, the insistence by some interests in the broadcast and television industries on interlaced 60 Hz formats further widens the gap with computer display requirements. Since non-interlaced display is required for computer-like applications of digital television systems, a de-interlacer is required when interlaced signals are displayed. There is substantial debate about the cost and quality of de-interlacers, since they would be needed in every such receiving device. Frame rate conversion, in addition to de-interlacing, further impacts cost and quality. For example, that NTSC to-from PAL converters continue to be very costly and yet conversion performance is not dependable for many common types of scenes. Since the issue of interlace is a complex and problematic subject, and in order to attempt to address the problems and issue of temporal rate, the invention is described in the context of a digital television standard without interlace.

Selecting Optimal Temporal Rates

Beat Problems. Optimal presentation on a 72 or 75 Hz display will occur if a camera or simulated image is created having a motion rate equal to the display rate (72 or 75 Hz, respectively), and vice versa. Similarly, optimal motion fidelity on a 60 Hz display will result from a 60 Hz camera or simulated image. Use of 72 Hz or 75 Hz generation rates with 60 Hz displays results in a 12 Hz or 15 Hz beat frequency, respectively. This beat can be removed through motion analysis, but motion analysis is expensive and inexact, often leading to visible artifacts and temporal aliasing. In the absence of motion analysis, the beat frequency dominates the perceived display rate, making the 12 or 15 Hz beat appear to provide less accurate motion than even 24 Hz. Thus, 24 Hz forms a natural temporal common denominator between 60 and 72 Hz. Although 75 Hz has a slightly higher 15 Hz beat with 60 Hz, its motion is still not as smooth as 24 Hz, and there is no integral relationship between 75 Hz and 24 Hz unless the 24 Hz rate is increased to 25 Hz. (In European 50 Hz countries, movies are often played 4% fast at 25 Hz; this can be done to make film presentable on 75 Hz displays.)

In the absence of motion analysis at each receiving device, 60 Hz motion on 72 or 75 Hz displays, and 75 or 72 Hz motion on 60 Hz displays, will be less smooth than 24 Hz images. Thus, neither 72/75 Hz nor 60 Hz motion is suitable for reaching a heterogeneous display population containing both 72 or 75 Hz and 60 Hz displays.

3-2 Pulldown. A further complication in selecting an optimal frame rate occurs due to the use of "3-2 pulldown" combined with video effects during the telecine (film-to-video) conversion process. During such conversions, the 3-2 pulldown pattern repeats a first frame (or field) 3 times, then the next frame 2 times, then the next frame 3 times, then the next frame 2 times, etc. This is how 24 fps film is presented on television at 60 Hz (actually, 59.94 Hz for NTSC color). That is, each of 12 pairs of 2 frames in one second of film is displayed 5 times, giving 60 images per second. The 3-2 pulldown pattern is shown in FIG. **1**.

By some estimates, more than half of all film on video has substantial portions where adjustments have been made at the 59.94 Hz video field rate to the 24 fps film. Such adjustments include "pan-and-scan", color correction, and title scrolling. Further, many films are time-adjusted by dropping frames or clipping the starts and ends of scenes to fit within a given broadcast scheduled. These operations can make the 3-2 pulldown process impossible to reverse, since there is both 59.94 Hz and 24 Hz motion. This can make the film very difficult to compress using the MPEG-2 standard. Fortunately, this problem is limited to existing NTSC-resolution material, since there is no significant library of higher resolution digital film using 3-2 pulldown.

Motion Blur. In order to further explore the issue of finding a common temporal rate higher than 24 Hz, it is useful to mention motion blur in the capture of moving images. Camera sensors and motion picture film are open to sensing a moving image for a portion of the duration of each frame. On motion picture cameras and many video cameras, the duration of this exposure is adjustable. Film cameras require a period of time to advance the film, and are usually limited to being open only about 210 out of 360 degrees, or a 58% duty cycle. On video cameras having CCD sensors, some portion of the frame time is often required to "read" the image from the sensor. This can vary from 10% to 50% of the frame time. In some sensors, an electronic shutter must be used to blank the light during this readout time. Thus, the "duty cycle" of CCD sensors usually varies from 50 to 90%, and is adjustable in some cameras. The light shutter can sometimes be adjusted to further reduce the duty cycle, if desired. However, for both film and video, the most common sensor duty cycle duration is 50%.

Preferred Rate. With this issue in mind, one can consider the use of only some of the frames from an image sequence captured at 60, 72, or 75 Hz. Utilizing one frame in two, three, four, etc., the subrates shown in TABLE 1 can be derived.

TABLE 1

Rate	1/2 Rate	1/3 Rate	1/4 Rate	1/5 Rate	1/6 Rate
75 Hz	37.5	25	18.25	15	12.5
72 Hz	36	24	18	14.4	12
60 Hz	30	20	15	12	10

The rate of 15 Hz is a unifying rate between 60 and 75 Hz. The rate of 12 Hz is a unifying rate between 60 and 72 Hz. However, the desire for a rate above 24 Hz eliminates these rates. 24 Hz is not common, but the use of 3-2 pulldown has come to be accepted by the industry for presentation on 60 Hz displays. The only candidate rates are therefore 30, 36, and 37.5 Hz. Since 30 Hz has a 7.5 Hz beat with 75 Hz, and a 6 Hz beat with 72 Hz, it is not useful as a candidate.

The motion rates of 36 and 37.5 Hz become prime candidates for smoother motion than 24 Hz material when presented on 60 and 72/75 Hz displays. Both of these rates are about 50% faster and smoother than 24 Hz. The rate of 37.5 Hz is not suitable for use with either 60 or 72 Hz, so it must be eliminated, leaving only 36 Hz as having the desired temporal rate characteristics. (The motion rate of 37.5 Hz could be used if the 60 Hz display rate for television can be move 4% to 62.5 Hz. Given the interests behind 60 Hz, 62.5 Hz appears unlikely—there are even those who propose the very obsolete 59.94 Hz rate for new television systems. However, if such a change were to be made, the other aspects of the present invention could be applied to the 37.5 Hz rate.)

The rates of 24, 36, 60, and 72 Hz are left as candidates for a temporal rate family. The rates of 72 and 60 Hz cannot be used for a distribution rate, since motion is less smooth when converting between these two rates than if 24 Hz is

used as the distribution rate, as described above. By hypothesis, we are looking for a rate faster than 24 Hz. Therefore, 36 Hz is the prime candidate for a master, unifying motion capture and image distribution rate for use with 60 and 72/75 Hz displays.

As noted above, the 3-2 pulldown pattern for 24 Hz material repeats a first frame (or field) 3 times, then the next frame 2 times, then the next frame 3 times, then the next frame 2 times, etc. When using 36 Hz, each pattern optimally should be repeated in a 2-1-2 pattern. This can be seen in TABLE 2 and graphically in FIG. **1**.

TABLE 2

Rate	Frame Numbers									
60 Hz	1	2	3	4	5	6	7	8	9	10
24 Hz	1	1	1	2	2	3	3	3	4	4
36 Hz	1	1	2	3	3	4	4	5	6	6

This relationship between 36 Hz and 60 Hz only holds for true 36 Hz material. 60 Hz material can be "stored" in 36 Hz, if it is interlaced, but 36 Hz cannot be reasonable created from 60 Hz without motion analysis and reconstruction. However, in looking for a new rate for motion capture, 36 Hz provides slightly smoother motion on 60 Hz than does 24 Hz, and provides substantially better image motion smoothness on a 72 Hz display. Therefore, 36 Hz is the optimum rate for a master, unifying motion capture and image distribution rate for use with 60 and 72 Hz displays, yielding smoother motion than 24 Hz material presented on such displays.

Although 36 Hz meets the goals set forth above, it is not the only suitable capture rate. Since 36 Hz cannot be simply extracted from 60 Hz, 60 Hz does not provide a suitable rate for capture. However, 72 Hz can be used for capture, with every other frame then used as the basis for 36 Hz distribution. The motion blur from using every other frame of 72 Hz material will be half of the motion blur at 36 Hz capture. Tests of motion blur appearance of every third frame from 72 Hz show that staccato strobing at 24 Hz is objectionable. However, utilizing every other frame from 72 Hz for 36 Hz display is not objectionable to the eye compared to 36 Hz native capture.

Thus, 36 Hz affords the opportunity to provide very smooth motion on 72 Hz displays by capturing at 72 Hz, while providing better motion on 60 Hz displays than 24 Hz material by using alternate frames of 72 Hz native capture material to achieve a 36 Hz distribution rate and then using 2-1-2 pulldown to derive a 60 Hz image.

In summary, TABLE 3 shows the preferred optimal temporal rates for capture and distribution in accordance with the present invention.

TABLE 3

		Preferred Rates	
Capture	Distribution	Optimal Display	Acceptable Display
72 Hz	36 Hz + 36 Hz	72 Hz	60 Hz

It is also worth noting that this technique of utilizing alternate frames from a 72 Hz camera to achieve a 36 Hz distribution rate can profit from an increased motion blur duty cycle. The normal 50% duty cycle at 72 Hz, yielding a 25% duty cycle at 36 Hz, has been demonstrated to be acceptable, and represents a significant improvement over 24 Hz on 60 Hz and 72 Hz displays. However, if the duty cycle is increased to be in the 75–90% range, then the 36 Hz samples would begin to approach the more common 50% duty cycle. Increasing the duty rate may be accomplished, for example, by using "backing store" CCD designs which have a short blanking time, yielding a high duty cycle. Other methods may be used, including dual CCD multiplexed designs.

Modified MPEG-2 Compression

For efficient storage and distribution, digital source material having the preferred temporal rate of 36 Hz should be compressed. The preferred form of compression for the present invention is accomplished by using a novel variation of the MPEG-2 standard.

MPEG-2 Basics. MPEG-2 is an international video compression standard defining a video syntax that provides an efficient way to represent image sequences in the form of more compact coded data. The language of the coded bits is the "syntax." For example, a few tokens can represent an entire block of 64 samples. MPEG also describes a decoding (reconstruction) process where the coded bits are mapped from the compact representation into the original, "raw" format of the image sequence. For example, a flag in the coded bitstream signals whether the following bits are to be decoded with a discrete cosine transform (DCT) algorithm or with a prediction algorithm. The algorithms comprising the decoding process are regulated by the semantics defined by MPEG. This syntax can be applied to exploit common video characteristics such as spatial redundancy, temporal redundancy, uniform motion, spatial masking, etc. In effect, MPEG-2 defines a programming language as well as a data format. An MPEG-2 decoder must be able to parse and decode an incoming data stream, but so long as the data stream complies with the MPEG-2 syntax, a wide variety of possible data structures and compression techniques can be used. The present invention takes advantage of this flexibility by devising a novel means and method for temporal and resolution scaling using the MPEG-2 standard.

MPEG-2 uses an intraframe and an interframe method of compression. In most video scenes, the background* remains relatively stable while action takes place in the foreground. The background may move, but a great deal of the scene is redundant. MPEG-2 starts its compression by creating a reference frame called an I (for Intra) frame. I frames are compressed without reference to other frames and thus contain an entire frame of video information. I frames provide entry points into a data bitstream for random access, but can only be moderately compressed. Typically, the data representing I frames is placed in the bitstream every 10 to 15 frames. Thereafter, since only a small portion of the frames that fall between the reference I frames are different from the bracketing I frames, only the differences are captured, compressed and stored. Two type of frames are used for such differences—P (for Predicted) frames and B (for Bi-directional Interpolated) frames.

P frames generally are encoded with reference to a past frame (either an I frame or a previous P frame), and, in general, will be used as a reference for future P frames. P frames receive a fairly high amount of compression. B frames pictures provide the highest amount of compression but generally require both a past and a future reference in order to be encoded. Bi-directional frames are never used for reference frames.

Macroblocks within P frames may also be individually encoded using intra-frame coding. Macroblocks within B frames may also be individually encoded using intra-frame

coding, forward predicted coding, backward predicted coding, or both forward and backward, or bi-directionally interpolated, predicted coding. A macroblock is a 16×16 pixel grouping of four 8×8 DCT blocks, together with one motion vector for P frames, and one or two motion vectors for B frames.

After coding, an MPEG data bitstream comprises a sequence of I, P, and B frames. A sequence may consist of almost any pattern of I, P, and B frames (there are a few minor semantic restrictions on their placement). However, it is common in industrial practice to have a fixed pattern (e.g., IBBPBBPBBPBBPBB).

As an important part of the present invention, an MPEG-2 data stream is created comprising a base layer, at least one optional temporal enhancement layer, and an optional resolution enhancement layer. Each of these layers will be described in detail.

Temporal Scalability

Base Layer. The base layer is used to carry 36 Hz source material. In the preferred embodiment, one of two MPEG-2 frame sequences can be used for the base layer: IBPBPBP or IPPPPPP. The latter pattern is most preferred, since the decoder would only need to decode P frames, reducing the required memory bandwidth if 24 Hz movies were also decoded without B frames.

72 Hz Temporal Enhancement Layer. When using MPEG-2 compression, it is possible to embed a 36 Hz temporal enhancement layer as B frames within the MPEG-2 sequence for the 36 Hz base layer if the P frame distance is even. This allows the single data stream to support both 36 Hz display and 72 Hz display. For example, both layers could be decoded to generate a 72 Hz signal for computer monitors, while only the base layer might be decoded and converted to generate a 60 Hz signal for television.

In the preferred embodiment, the MPEG-2 coding patterns of IPBBBPBBBPBBBP or IPBPBPBPB both allow placing alternate frames in a separate stream containing only temporal enhancement B frames to take 36 Hz to 72 Hz. These coding patterns are shown in FIGS. **2** and **3**, respectively. The 2-Frame P spacing coding pattern of FIG. **3** has the added advantage that the 36 Hz decoder would only need to decode P frames, reducing the required memory bandwidth if 24 Hz movies were also decoded without B frames.

Experiments with high resolution images have suggested that the 2-Frame P spacing of FIG. **3** is optimal for most types of images. That is, the construction in FIG. **3** appears to offer the optimal temporal structure for supporting both 60 and 72 Hz, while providing excellent results on modern 72 Hz computer-compatible displays. This construction allows two digital streams, one at 36 Hz for the base layer, and one at 36 Hz for the enhancement layer B frames to achieve 72 Hz. This is illustrated in FIG. **4**, which is a block diagram showing that a 36 Hz base layer MPEG-2 decoder **50** simply decodes the P frames to generate 36 Hz output, which may then be readily converted to either 60 Hz or 72 Hz display. An optional second decoder **52** simply decodes the B frames to generate a second 36 Hz output, which when combined with the 36 Hz output of the base layer decoder **50** results in a 72 Hz output (a method for combining is discussed below). In an alternative embodiment, one fast MPEG-2 decoder **50** could decode both the P frames for the base layer and the B frames for the enhancement layer.

Optimal Master Format. A number of companies are building MPEG-2 decoding chips which operate at around 11 MPixels/second. The MPEG-2 standard has defined some "profiles" for resolutions and frame rates. Although these profiles are strongly biased toward computer-incompatible format parameters such as 60 Hz, non-square pixels, and interlace, many chip manufacturers appear to be developing decoder chips which operate at the "main profile, main level". This profile is defined to be any horizontal resolution up to 720 pixels, any vertical resolution up to 576 lines at up to 25 Hz, and any frame rate of up to 480 lines at up to 30 Hz. A wide range of data rates from approximately 1.5 Mbits/second to about 10 Mbits/second is also specified. However, from a chip point of view, the main issue is the rate at which pixels are decoded. The main-level, main-profile pixel rate is about 10.5 MPixels/second.

Although there is variation among chip manufacturers, most MPEG-2 decoder chips will in fact operate at up to 13 MPixels/second, given fast support memory. Some decoder chips will go as fast as 20 MPixels/second or more. Given that CPU chips tend to gain 50% improvement or more each year at a given cost, one can expect some near-term flexibility in the pixel rate of MPEG-2 decoder chips.

TABLE 4 illustrates some desirable resolutions and frame rates, and their corresponding pixel rates.

TABLE 4

Resolution			
X	Y	Frame Rate (Hz)	Pixel Rate (MPixels/s)
640	480	36	11.1
720	486	36	12.6
720	486	30 (for comparison)	10.5
704	480	36	12.2
704	480	30 (for comparison)	10.1
680	512	36	12.5
1024	512	24	12.6

All of these formats can be utilized with MPEG-2 decoder chips that can generate at least 12.6 MPixels/second. The very desirable 640×480 at 36 Hz format can be achieved by nearly all current chips, since its rate is 11.1 MPixels/second. A widescreen 1024×512 image can be squeezed into 680×512 using a 1.5:1 squeeze, and can be supported at 36 Hz if 12.5 MPixels/second can be handled. The highly desirable square pixel widescreen template of 1024×512 can achieve 36 Hz when MPEG-2 decoder chips can process about 18.9 MPixels/second. This becomes more feasible if 24 Hz and 36 Hz material is coded only with P frames, such that B frames are only required in the 72 Hz temporal enhancement layer decoders. Decoders which use only P frames require less memory and memory bandwidth, making the goal of 19 MPixels/second more accessible.

The 1024×512 resolution template would most often be used with 2.35:1 and 1.85:1 aspect ratio films at 24 fps. This material only requires 11.8 MPixels/second, which should fit within the limits of most existing main level-main profile decoders.

All of these formats are shown in FIG. **6** in a "master template" for a base layer at 24 or 36 Hz. Accordingly, the present invention provides a unique way of accommodating a wide variety of aspect ratios and temporal resolution compared to the prior art. (Further discussion of a master template is set forth below).

The temporal enhancement layer of B frames to generate 72 Hz can be decoded using a chip with double the pixel rates specified above, or by using a second chip in parallel with additional access to the decoder memory. Under the present invention, at least two ways exist for merging of the enhancement and base layer data streams to insert the

alternate B frames. First, merging can be done invisibly to the decoder chip using the MPEG-2 transport layer. The MPEG-2 transport packets for two PIDs (Program IDs) can be recognized as containing the base layer and enhancement layer, and their stream contents can both be simply passed on to a double-rate capable decoder chip, or to an appropriately configured pair of normal rate decoders. Second, it is also possible to use the "data partitioning" feature in the MPEG-2 data stream instead of the transport layer from MPEG-2 systems. The data partitioning feature allows the B frames to be marked as belonging to a different class within the MPEG-2 compressed data stream, and can therefore be flagged to be ignored by 36-Hz decoders which only support the temporal base layer rate.

Temporal scalability, as defined by MPEG-2 video compression, is not as optimal as the simple B frame partitioning of the present invention. The MPEG-2 temporal scalability is only forward referenced from a previous P or B frame, and thus lacks the efficiency available in the B frame encoding proposed here, which is both forward and backward referenced. Accordingly, the simple use of B frames as a temporal enhancement layer provides a simpler and more efficient temporal scalability than does the temporal scalability defined within MPEG-2. Notwithstanding, this use of B frames as the mechanism for temporal scalability is fully compliant with MPEG-2. The two methods of identifying these B frames as an enhancement layer, via data partitioning or alternate PID's for the B frames, are also fully compliant.

50/60 Hz Temporal enhancement layer. In addition to, or as an alternative to, the 72 Hz temporal enhancement layer described above (which encodes a 36 Hz signal), a 60 Hz temporal enhancement layer (which encodes a 24 Hz signal) can be added in similar fashion to the 36 Hz base layer. A 60 Hz temporal enhancement layer is particular useful for encoding existing 60 Hz interlaced video material.

Most existing 60 Hz interlaced material is video tape for NTSC in analog, D1, or D2 format. There is also a small amount of Japanese HDTV (SMPTE 240/260M). There are also cameras which operate in this format. Any such 60 Hz interlaced format can be processed in known fashion such that the signal is de-interlaced and frame rate converted. This process involves very complex image understanding technology, similar to robot vision. Even with very sophisticated technology, temporal aliasing generally will result in "misunderstandings" by the algorithm and occasionally yield artifacts. Note that the typical 50% duty cycle of image capture means that the camera is "not looking" half the time. The "backwards wagon wheels" in movies is an example of temporal aliasing due to this normal practice of temporal undersampling. Such artifacts generally cannot be removed without human-assisted reconstruction. Thus, there will always be cases which cannot be automatically corrected. However, the motion conversion results available in current technology should be reasonable on most material.

The price of a single high definition camera or tape machine would be similar to the cost of such a converter. Thus, in a studio having several cameras and tape machines, the cost of such conversion becomes modest. However, performing such processing adequately is presently beyond the budget of home and office products. Thus, the complex processing to remove interlace and convert the frame rate for existing material is preferably accomplished at the origination studio. This is shown in FIG. **5**, which is a block diagram showing 60 Hz interlaced input from cameras **60** or other sources (such as non-film video tape) **62** to a converter **64** that includes a de-interlacer function and a frame rate conversion function that can output a 36 Hz signal (36 Hz base layer only) and a 72 Hz signal (36 Hz base layer plus 36 Hz from the temporal enhancement layer).

As an alternative to outputting a 72 Hz signal (36 Hz base layer plus 36 Hz from the temporal enhancement layer), this conversion process can be adapted to produce a second MPEG-2 24 Hz temporal enhancement layer on the 36 Hz base layer which would reproduce the original 60 Hz signal, although de-interlaced. If similar quantization is used for the 60 Hz temporal enhancement layer B frames, the data rate should be slightly less than the 72 Hz temporal enhancement layer, since there are fewer B frames.

>60 I 36+36=72
>60 I 36+24=60
>72 36, 72, 60
>50 I 36, 50, 72
>60 24, 36, 72

The vast majority of material of interest to the United States is low resolution NTSC. At present, most NTSC signals are viewed with substantial impairment on most home televisions. Further, viewers have come to accept the temporal impairments inherent in the use of 3-2 pulldown to present film on television. Nearly all prime-time television is made on film at 24 frames per second. Thus, only sports, news, and other video-original shows need be processed in this fashion. The artifacts and losses associated with converting these shows to a 36/72 Hz format are likely to be offset by the improvements associated with high-quality de-interlacing of the signal.

Note that the motion blur inherent in the 60 Hz (or 59.94 Hz) fields should be very similar to the motion blur in 72 Hz frames. Thus, this technique of providing a base and enhancement layer should appear similar to 72 Hz origination in terms of motion blur. Accordingly, few viewers will notice the difference, except possibly as a slight improvement, when interlaced 60 Hz NTSC material is processed into a 36 Hz base layer, plus 24 Hz from the temporal enhancement layer, and displayed at 60 Hz. However, those who buy new 72 Hz digital non-interlaced televisions will notice a small improvement when viewing NTSC, and a major improvement when viewing new material captured or originated at 72 Hz. Even the decoded 36 Hz base layer presented on 72 Hz displays will look as good as high quality digital NTSC, replacing interlace artifacts with a slower frame rate.

The same process can also be applied to the conversion of existing PAL 50 Hz material to a second MPEG-2 enhancement layer. PAL video tapes are best slowed to 48 Hz prior to such conversion. Live PAL requires conversion using the relatively unrelated rates of 50, 36, and 72 Hz. Such converter units presently are only affordable at the source of broadcast signals, and are not presently practical at each receiving device in the home and office.

Resolution Scalability

It is possible to enhance the base resolution template using hierarchical resolution scalability utilizing MPEG-2 to achieve higher resolutions built upon a base layer. Use of enhancement can achieve resolutions at 1.5× and 2× the base layer. Double resolution can be built in two steps, by using 3/2 then 4/3, or it can be a single factor-of-two step. This is shown in FIG. **7**.

The process of resolution enhancement can be achieved by generating a resolution enhancement layer as an independent MPEG-2 stream and applying MPEG-2 compression to the enhancement layer. This technique differs from the "spatial scalability" defined with MPEG-2, which has

proven to be highly inefficient. However, MPEG-2 contains all of the tools to construct an effective layered resolution to provide spatial scalability. The preferred layered resolution encoding process of the present invention is shown in FIG. **8**. The preferred decoding process of the present invention is shown in FIG. **9**.

Resolution Layer Coding. In FIG. **8**, an original 2k×1k image **80** is filtered in conventional fashion to ½ resolution in each dimension to create a 1024×512 base layer **81**. The base layer **81** is then compressed according to conventional MPEG-2 algorithms, generating an MPEG-2 base layer **82** suitable for transmission. Importantly, full MPEG-2 motion compensation can be used during this compression step. That same signal is then decompressed using conventional MPEG-2 algorithms back to a 1024×512 image **83**. The 1024×512 image **83** is expanded (for example, by pixel replication, or preferably by better filters such as spline interpolation) to a first 2k×1k enlargement **84**.

Meanwhile, as an optional step, the filtered 1024×512 base layer **81** is expanded to a second 2k×1k enlargement **85**. This second 2k×1k enlargement **85** is subtracted from the original 2k×1k image **80** to generate an image that represents the top octave of resolution between the original high resolution image **80** and the original base layer image **81**. The resulting image is optionally multiplied by a sharpness factor or weight, and then added to the difference between the original 2k×1k image **80** and the second 2k×1k enlargement **85** to generate a center-weighted 2k×1k enhancement layer source image **86**. This enhancement layer source image **86** is then compressed according to conventional MPEG-2 algorithms, generating a separate MPEG-2 resolution enhancement layer **87** suitable for transmission. Importantly, full MPEG-2 motion compensation can be used during this compression step.

Resolution Layer Decoding. In FIG. **9**, the base layer **82** is decompressed using conventional MPEG-2 algorithms back to a 1024×512 image **90**. The 1024×512 image **90** is expanded to a first 2k×1k image **91**. Meanwhile, the resolution enhancement layer **87** is decompressed using conventional MPEG-2 algorithms back to a second 2k×1k image **92**. The first 2k×1k image **91** and the second 2k×1k image **92** are then added to generate a high-resolution 2k×1k image **93**.

Improvements Over MPEG-2. In essence, the enhancement layer is created by expanding the decoded base layer, taking the difference between the original image and the decode base layer, and compressing. However, a compressed resolution enhancement layer may be optionally added to the base layer after decoding to create a higher resolution image in the decoder. The inventive layered resolution encoding process differs from MPEG-2 spatial scalability in several ways:

The enhancement layer difference picture is compressed as its own MPEG-2 data stream, with I, B, and P frames. This difference represents the major reason that resolution scalability, as proposed here, is effective, where MPEG-2 spatial scalability is ineffective. The spatial scalability defined within MPEG-2 allows an upper layer to be coded as the difference between the upper layer picture and the expanded base layer, or as a motion compensated MPEG-2 data stream of the actual picture, or a combination of both. However, neither of these encodings is efficient. The difference from the base layer could be considered as an I frame of the difference, which is inefficient compared to a motion-compensated difference picture, as in the present invention. The upper-layer encoding defined within MPEG-2 is also inefficient, since it is identical to a complete encoding of the upper layer. The motion compensated encoding of the difference picture, as in the present invention, is therefore substantially more efficient.

Since the enhancement layer is an independent MPEG-2 data stream, the MPEG-2 systems transport layer (or another similar mechanism) must be used to multiplex the base layer and enhancement layer.

The expansion and resolution reduction filtering can be a gaussian or spline function, which are more optimal than the bilinear interpolation specified in MPEG-2 spatial scalability.

The image aspect ratio must match between the lower and higher layers in the preferred embodiment. In MPEG-2 spatial scalability, extensions to width and/or height are allowed. Such extensions are not allowed in the preferred embodiment due to efficiency requirements.

Due to efficiency requirements, and the extreme amounts of compression used in the enhancement layer, the entire area of the enhancement layer is not coded. Usually, the area excluded from enhancement will be the border area. Thus, the 2k×1k enhancement layer source image **86** in the preferred embodiment is center-weighted. In the preferred embodiment, a fading function (such as linear weighting) is used to "feather" the enhancement layer toward the center of the image and away from the border edge to avoid abrupt transitions in the image. Moreover, any manual or automatic method of determining regions having detail which the eye will follow can be utilized to select regions which need detail, and to exclude regions where extra detail is not required. All of the image has detail to the level of the base layer, so all of the image is present. Only the areas of special interest benefit from the enhancement layer. In the absence of other criteria, the edges or borders of the frame can be excluded from enhancement, as in the center-weighted embodiment described above. The MPEG-2 parameters "lower_layer_prediction_horizontal&vertical offset" parameters used as signed negative integers, combined with the "horizontal&vertical_subsampling_factor_m&n" values, can be used to specify the enhancement layer rectangle's overall size and placement within the expanded base layer.

A sharpness factor is added to the enhancement layer to offset the loss of sharpness which occurs during quantization. Care must be taken to utilize this parameter only to restore the clarity and sharpness of the original picture, and not to enhance the image. As noted above with respect to FIG. **8**, the sharpness factor is the "high octave" of resolution between the original high resolution image **80** and the original base layer image **81** (after expansion). This high octave image will be quite noisy, in addition to containing the sharpness and detail of the high octave of resolution. Adding too much of this image can yield instability in the motion compensated encoding of the enhancement layer. The amount that should be added depends upon the level of the noise in the original image. A typical weighting value is 0.25. For noisy images, no sharpness should be added, and it even may be advisable to suppress the noise in the original for the enhancement layer before compressing using conventional noise suppression techniques which preserve detail.

Temporal and resolution scalability are intermixed by utilizing B frames for temporal enhancement from 36

to 72 Hz in both the base and resolution enhancement layers. In this way, four possible levels of decoding performance are possible with two layers of resolution scalability, due to the options available with two levels of temporal scalability.

These differences represent substantial improvements over MPEG-2 spatial and temporal scalability. However, these differences are still consistent with MPEG-2 decoder chips, although additional logic may be required in the decoder to perform the expansion and addition in the resolution enhancement decoding process shown in FIG. **9**. Such additional logic is nearly identical to that required by the less effective MPEG-2 spatial scalability.

Optional Non-MPEG-2 Coding of the Resolution Enhancement Layer. It is possible to utilize a different compression technique for the resolution enhancement layer than MPEG-2. Further, it is not necessary to utilize the same compression technology for the resolution enhancement layer as for the base layer. For example, motion-compensated block wavelets can be utilized to match and track details with great efficiency when the difference layer is coded. Even if the most efficient position for placement of wavelets jumps around on the screen due to changing amounts of differences, it would not be noticed in the low-amplitude enhancement layer. Further, it is not necessary to cover the entire image—it is only necessary to place the wavelets on details. The wavelets can have their placement guided by detail regions in the image. The placement can also be biased away from the edge.

Multiple Resolution Enhancement Layers. At the bit rates being described here, where 2 MPixels (2048×1024) at 72 frames per second are being coded in 18.5 mbits/second, only a base layer (1024×512 at 72 fps) and a single resolution enhancement layer have been successfully demonstrated. However, the anticipated improved efficiencies available from further refinement of resolution enhancement layer coding should allow for multiple resolution enhancement layers. For example, it is conceivable that a base layer at 512×256 could be resolution-enhanced by four layers to 1024×512, 1536×768, and 2048×1024. This is possible with existing MPEG-2 coding at the movie frame rate of 24 frames per second. At high frame rates such as 72 frames per second, MPEG-2 does not provide sufficient efficiency in the coding of resolution-enhancement layers to allow this many layers at present.

Mastering Formats

Utilizing a template at or near 2048×1024 pixels, it is possible to create a single digital moving image master format source for a variety of release formats. As shown in FIG. **6**, a 2k×1k template can efficiently support the common widescreen aspect ratios of 1.85:1 and 2.35:1. A 2k×1k template can also accommodate 1.33:1 and other aspect ratios.

Although integers (especially the factor of 2) and simple fractions (3/2 & 4/3) are most efficient step sizes in resolution layering, it is also possible to use arbitrary ratios to achieve any required resolution layering. However, using a 2048×1024 template, or something near it, provides not only a high quality digital master format, but also can provide many other convenient resolutions from a factor of two base layer (1k×512), including NTSC, the U.S. television standard.

It is also possible to scan film at higher resolutions such as 4k×2k, 4k×3k, or 4k×4k. Using optional resolution enhancement, these higher resolutions can be created from a central master format resolution near 2k×1k. Such enhancement layers for film will consist of both image detail, grain, and other sources of noise (such as scanner noise). Because of this noisiness, the use of compression technology in the enhancement layer for these very high resolutions will require alternatives to MPEG-2 types of compression. Fortunately, other compression technologies exist which can be utilized for compressing such noisy signals, while still maintaining the desired detail in the image. One example of such a compression technology is motion compensated wavelets or motion compensated fractals.

Preferably, digital mastering formats should be created in the frame rate of the film if from existing movies (i.e., at 24 frames per second). The common use of both 3-2 pulldown and interlace would be inappropriate for digital film masters. For new digital electronic material, it is hoped that the use of 60 Hz interlace will cease in the near future, and be replaced by frame rates which are more compatible with computers, such as 72 Hz, as proposed here. The digital image masters should be made at whatever frame rate the images are captured, whether at 72 Hz, 60 Hz, 36 Hz, 37.5 Hz, 75 Hz, 50 Hz, or other rates.

The concept of a mastering format as a single digital source picture format for all electronic release formats differs from existing practices, where PAL, NTSC, letterbox, pan-and-scan, HDTV, and other masters are all generally independently made from a film original. The use of a mastering format allows both film and digital/electronic shows to be mastered once, for release on a variety of resolutions and formats.

Combined Resolution and Temporal Enhancement Layers

As noted above, both temporal and resolution enhancement layering can be combined. Temporal enhancement is provided by decoding B frames. The resolution enhancement layer also has two temporal layers, and thus also contains B frames.

For 24 fps film, the most efficient and lowest cost decoders might use only P frames, thereby minimizing both memory and memory bandwidth, as well as simplifying the decoder by eliminating B frame decoding. Thus, in accordance with the present invention, decoding movies at 24 fps and decoding advanced television at 36 fps could utilize a decoder without B frame capability. B frames can then be utilized between P frames to yield the higher temporal layer at 72 Hz, as shown in FIG. **3**, which could be decoded by a second decoder. This second decoder could also be simplified, since it would only have to decode B frames.

Such layering also applies to the enhanced resolution layer, which can similarly utilize only P and I frames for 24 and 36 fps rates. The resolution enhancement layer can add the full temporal rate of 72 Hz at high resolution by adding B frame decoding within the resolution enhancement layer.

The combined resolution and temporal scalable options for a decoder are illustrated in FIG. **10**. This example also shows an allocation of the proportions of an approximately 18 mbits/second data stream to achieve the spatio-temporal layered Advanced Television of the present invention.

In FIG. **10**, a base layer MPEG-2 1024×512 pixel data stream (comprising only P frames in the preferred embodiment) is applied to a base resolution decoder **100**. Approximately 5 mbits/per sec of bandwidth is required for the P frames. The base resolution decoder **100** can decode at 24 or 36 fps. The output of the base resolution decoder **100** comprises low resolution, low frame rate images (1024×512 pixels at 24 or 36 Hz).

The B frames from the same data stream are parsed out and applied to a base resolution temporal enhancement layer decoder **102**. Approximately 3 mbits/per sec of bandwidth is required for such B frames. The output of the base resolution decoder **100** is also coupled to the temporal enhancement layer decoder **102**. The temporal enhancement layer decoder **102** can decode at 36 fps. The combined output of the temporal enhancement layer decoder **102** comprises low resolution, high frame rate images (1024×512 pixels at 72 Hz).

Also in FIG. **10**, a resolution enhancement layer MPEG-2 2k×1k pixel data stream (comprising only P frames in the preferred embodiment) is applied to a base temporal high resolution enhancement layer decoder **104**. Approximately 6 mbits/per sec of bandwidth is required for the P frames. The output of the base resolution decoder **100** is also coupled to the high resolution enhancement layer decoder **104**. The high resolution enhancement layer decoder **104** can decode at 24 or 36 fps. The output of the high resolution enhancement layer decoder **104** comprises high resolution, low frame rate images (2k×1k pixels at 24 or 36 Hz).

The B frames from the same data stream are parsed out and applied to a high resolution temporal enhancement layer decoder **106**. Approximately 4 mbits/per sec of bandwidth is required for such B frames. The output of the high resolution enhancement layer decoder **104** is coupled to the high resolution temporal enhancement layer decoder **106**. The output of the temporal enhancement layer decoder **102** is also coupled to the high resolution temporal enhancement layer decoder **106**. The high resolution temporal enhancement layer decoder **106** can decode at 36 fps. The combined output of the high resolution temporal enhancement layer decoder **106** comprises high resolution, high frame rate images (2k×1k pixels at 72 Hz).

Note that the compression ratio achieved through this scalable encoding mechanism is very high, indicating excellent compression efficiency. These ratios are shown in TABLE 5 for each of the temporal and scalability options from the example in FIG. **10**. These ratios are based upon source RGB pixels at 24 bits/pixel. (If the 16 bits/pixel of conventional 4:2:2 encoding or the 12 bits/pixel of conventional 4:2:0 encoding are factored in, then the compression ratios would be 3/4 and 1/2, respectively, of the values shown.)

TABLE 5

Layer	Resolution	Rate (Hz)	Data Rate - mb/s (typical)	MPixels/s	Comp. Ratio (typical)
Base	1k × 512	36	5	18.9	90
Base Temp.	1k × 512	72	8 (5 + 3)	37.7	113
High	2k × 1k	36	11 (5 + 6)	75.5	165
High Temp.	2k × 1k	72	18 (5 + 3 + 6 + 4)	151	201
for comparison:					
CCIR 601	720 × 486	29.97	5	10.5	50

These high compression ratios are enabled by two factors:

1) The high temporal coherence of high-frame-rate 72 Hz images;
2) The high spatial coherence of high resolution 2k×1k images;
3) Application of resolution detail enhancement to the important parts of the image (e.g., the central heart), and not to the less important parts (e.g., the borders of the frame).

These factors are exploited in the inventive layered compression technique by taking advantage of the strengths of the MPEG-2 encoding syntax. These strengths include bidirectionally interpolated B frames for temporal scalability. The MPEG-2 syntax also provides efficient motion representation through the use of motion-vectors in both the base and enhancement layers. Up to some threshold of high noise and rapid image change, MPEG-2 is also efficient at coding details instead of noise within an enhancement layer through motion compensation in conjunction with DCT quantization. Above this threshold, the data bandwidth is best allocated to the base layer. These MPEG-2 mechanisms work together when used according to the present invention to yield highly efficient and effective coding which is both temporally and spatially scalable.

In comparison to 5 mbits/second encoding of CCIR 601 digital video, the compression ratios in TABLE 5 are much higher. One reason for this is the loss of some coherence due to interlace. Interlace negatively affects both the ability to predict subsequent frames and fields, as well as the correlation between vertically adjacent pixels. Thus, a major portion of the gain in compression efficiency described here is due to the absence of interlace.

The large compression ratios achieved by the present invention can be considered from the perspective of the number of bits available to code each MPEG-2 macroblock. As noted above, macroblock is a 16×6 pixel grouping of four 8×8 DCT blocks, together with one motion vector for P frames, and one or two motion vectors for B frames. The bits available per macroblock for each layer are shown in TABLE 6.

TABLE 6

Layer	Data Rate - mb/s (typical)	MPixels/s	Average Available Bits/Macroblock
Base	5	19	68
Base Temporal	8 (5 + 3)	38	54
High	11 (5 + 6)	76	37 overall, 20/ enh. layer
High w/border around hi-res center	11 (5 + 6)	61	46 overall, 35/ enh. layer
High Temporal	18 (5 + 3 + 6 + 4)	151	30 overall, 17/ enh. layer
High Temporal w/border around hi-res center	18 (5 + 3 + 6 + 4)	123	37 overall, 30/ enh. layer
for comparison:			
CCIR 601	5	10.5	122

The available number of bits to code each macroblock is smaller in the enhancement layer than in the base layer. This is appropriate, since it is desirable for the base layer to have as much quality as possible. The motion vector requires 8 bits or so, leaving 10 to 25 bits for the macroblock type codes and for the DC and AC coefficients for all four 8×8 DCT blocks. This leaves room for only a few "strategic" AC coefficients. Thus, statistically, most of the information available for each macroblock must come from the previous frame of an enhancement layer.

It is easily seen why the MPEG-2 spatial scalability is ineffective at these compression ratios, since there is not sufficient data space available to code enough DC and AC

coefficients to represent the high octave of detail represented by the enhancement difference image. The high octave is represented primarily in the fifth through eighth horizontal and vertical AC coefficients. These coefficients cannot be reached if there are only a few bits available per DCT block.

The system described here gains its efficiency by utilizing motion compensated prediction from the previous enhancement difference frame. This is demonstrably effective in providing excellent results in temporal and resolution (spatial) layered encoding.

Graceful Degradation The temporal scaling and resolution scaling techniques described here work well for normal-running material at 72 frames per second using a 2k×1k original source. These techniques also work well on film-based material which runs at 24 fps. At high frame rates, however, when a very noise-like image is coded, or when there are numerous shot cuts within an image stream, the enhancement layers may lose the coherence between frames which is necessary for effective coding. Such loss is easily detected, since the buffer-fullness/rate-control mechanism of a typical MPEG-2 encoder/decoder will attempt to set the quantizer to very coarse settings. When this condition is encountered, all of the bits normally used to encode the resolution enhancement layers can be allocated to the base layer, since the base layer will need as many bits as possible in order to code the stressful material. For example, at between about 0.5 and 0.33 MPixels per frame for the base layer, at 72 frames per second, the resultant pixel rate will be 24 to 36 MPixels/second. Applying all of the available bits to the base layer provides about 0.5 to 0.67 million additional bits per frame at 18.5 mbits/second, which should be sufficient to code very well, even on stressful material.

Under more extreme cases, where every frame is very noise-like and/or there are cuts happening every few frames, it is possible to gracefully degrade even further without loss of resolution in the base layer. This can be done by removing the B frames coding the temporal enhancement layer, and thus allow use of all of the available bandwidth (bits) for the I and P frames of the base layer at 36 fps. This increases the amount of data available for each base layer frame to between about 1.0 and 1.5 mbits/frame (depending on the resolution of the base layer). This will still yield the fairly good motion rendition rate of 36 fps at the fairly high quality resolution of the base layer, under what would be extremely stressful coding conditions. However, if the base-layer quantizer is still operating at a coarse level under about 18.5 mbits/second at 36 fps, then the base layer frame rate can be dynamically reduced to 24, 18, or even 12 frames per second (which would make available between 1.5 and 4 mbits for every frame), which should be able to handle even the most pathological moving image types. Methods for changing frame rate in such circumstances are known in the art.

The current proposal for U.S. advanced television does not allow for these methods of graceful degradation, and therefore cannot perform as well on stressful material as the inventive system.

In most MPEG-2 encoders, the adaptive quantization level is controlled by the output buffer fullness. At the high compression ratios involved in the resolution enhancement layer of the present invention, this mechanism may not function optimally. Various techniques can be used to optimize the allocation of data to the most appropriate image regions. The conceptually simplest technique is to perform a pre-pass of encoding over the resolution enhancement layer to gather statistics and to search out details which should be preserved. The results from the pre-pass can be used to set the adaptive quantization to optimize the preservation of detail in the resolution enhancement layer. The settings can also be artificially biased to be non-uniform over the image, such that image detail is biased to allocation in the main screen regions, and away from the macroblocks at the extreme edges of the frame.

Except for leaving an enhancement-layer border at high frame rates, none of these adjustments are required, since existing decoders function well without such improvements. However, these further improvements are available with a small extra effort in the enhancement layer encoder.

Conclusion

The choice of 36 Hz as a new common ground temporal rate appears to be optimal. Demonstrations of the use of this frame rate indicate that it provides significant improvement over 24 Hz for both 60 Hz and 72 Hz displays. Images at 36 Hz can be created by utilizing every other frame from 72 Hz image capture. This allows combining a base layer at 36 Hz (preferably using P frames) and a temporal enhancement layer at 36 Hz (using B frames) to achieve a 72 Hz display.

The "future-looking" rate of 72 Hz is not compromised by the inventive approach, while providing transition for 60 Hz analog NTSC display. The invention also allows a transition for other 60 Hz displays, if other passive-entertainment-only (computer incompatible) 60 Hz formats under consideration are accepted.

Resolution scalability can be achieved though using a separate MPEG-2 image data stream for a resolution enhancement layer. Resolution scalability can take advantage of the B frame approach to provide temporal scalability in both the base resolution and enhancement resolution layers.

The invention described here achieves many highly desirable features. It has been claimed by some involved in the U.S. advanced television process that neither resolution nor temporal scalability can be achieved at high definition resolutions within the approximately 18.5 mbits/second available in terrestrial broadcast. However, the present invention achieves both temporal and spatial-resolution scalability within this available data rate.

It has also been claimed that 2 MPixels at high frame rates cannot be achieved without the use of interlace within the available 18.5 mbits/second data rate. However, achieves not only resolution (spatial) and temporal scalability, it can provide 2 MPixels at 72 frames per second.

In addition to providing these capabilities, the present invention is also very robust, particularly compared to the current proposal for advanced television. This is made possible by the allocation of most or all of the bits to the base layer when very stressful image material is encountered. Such stressful material is by its nature both noise-like and very rapidly changing. In these circumstances, the eye cannot see detail associated with the enhancement layer of resolution. Since the bits are applied to the base layer, the reproduced frames are substantially more accurate than the currently proposed advanced television system, which uses a single constant higher resolution.

Thus, the inventive system optimizes both perceptual and coding efficiency, while providing maximum visual impact. This system provides a very clean image at a resolution and frame rate performance that had been considered by many to be impossible. It is believed that the inventive system is likely to outperform the advanced television formats being proposed at this time. In addition to this anticipated superior performance, the present invention also provides the highly valuable features of temporal and resolution layering.

Encryption & Watermarking

Overview

Layered compression allows a form of modularized decomposition of an image that supports flexible encryption and watermarking techniques. Using layered compression, the base layer and various internal components of the base layer can be used to encrypt and/or watermark a compressed layered movie data stream. Encrypting and watermarking the compressed data stream reduces the amount of required processing compared to a high resolution data stream, which must be processed at the rate of the original data. The amount of computing time required for encryption and watermarking depends on the amount of data that must be processed. For a particular level of computational resources, reducing the amount of data through layered compression can yield improved encryption strength, or reduced the cost of encryption/decryption, or a combination of both.

Encryption allows protection of the compressed image (and audio) data so that only users with keys can easily access the information. Layered compression divides images into components: a temporal and spatial base layer, plus temporal and spatial enhancement layer components. The base layer is the key to decoding a viewable picture. Thus, only the temporal and spatial base layer need be encrypted, thereby reducing the required amount of computation. The enhancement layers, both temporal and spatial, are of no value without the decrypted and decompressed base layer. Accordingly, by using such a layered subset of the bits, the entire picture stream can be made unrecognizable by encrypting only a small fraction of the bits of the entire stream. A variety of encryption algorithms and strengths can be applied to various portions of the layered stream, including enhancement layers. Encryption algorithms or keys also can be changed as often as at each slice boundary (a data stream structure meant for signal error recovery), to provide greater intertwining of the encryption and the picture stream.

Watermarking invisibly (or nearly invisibly) marks copies of a work. The concept originates with the practice of placing an identifiable symbol within paper to ensure that a document (e.g., money) is genuine. Watermarking allows the tracking of copies which may be removed from the possession of an authorized owner or licensee. Thus, watermarking can help track lost or stolen copies back to a source, so that the nature of the method of theft can be determined and so that those involved in a theft can be identified.

The concept of watermarking has been applied to images, by attempting to place a faint image symbol or signature on top of the real image being presented. The most widely held concept of electronic watermarking is that it is a visible low-amplitude image, impressed on top of the visible high-amplitude image. However, this approach alters the quality of the original image slightly, similar to the process of impressing a network logo in the corner of the screen on television. Such alteration is undesirable because it reduces picture quality.

In the compressed domain, it is possible to alter signals and impress watermark symbols or codes upon them without these watermark alterations being applied directly in the visual domain. For example, the DCT transformation operates in frequency transform space. Any alterations in this space, especially if corrected from frame to frame, may be much less visible (or completely invisible). Watermarking preferably uses low order bits in certain coefficients in certain frames of a layered compression movie stream to provide reliable identification while being invisible or nearly invisible to the eye. Watermarking can be applied to the base layer of a compressed data stream. However, it is possible to protect enhancement layers to a much greater degree than the base layer, since the enhancement layers are very subtle in detail to begin with. Each enhancement layer can have its own unique identifying watermark structure.

In general, care must be taken to ensure that encryption and watermarking are co-mingled such that the watermark cannot be easily stripped out of the stream. For this reason, it is valuable to apply watermarks in a variety of useful locations within a layered data stream. However, since the watermark is most useful in detection of pirates and the path of the piracy, one must assume that encryption may have been completely or partially compromised, and thus watermarking should be robustly ingrained in the data stream in such a way that no simple procedure can be applied to remove the various watermarks. The preferred approach is to have a secure master representation of a work and provide random variations from the master to uniquely create each watermark. Such random variations cannot be removed, since there is no way from the final stream to detect what the variations might have been. However, to guard against additional random variations being added to the pirated stream to confound the watermark (perhaps by adding visible levels of noise to the image), it is useful to have a variety of other techniques (such as the motion vector second-best technique described below) to define watermarks.

Encryption preferably operates in such a fashion as to scramble, or at least visibly impair, as many frames as possible from the smallest possible units of encryption. Compression systems such as the various types of MPEG and motion-compensated-wavelets utilize a hierarchy of units of information which must be processed in cascade in order to decode a range of frames (a "Group of Pictures," or GOP). This characteristic affords opportunities early in the range of concatenated decoded units to encrypt in such a way as to scramble a large range of frames from a small number of parameters. Further, to protect a work commercially, not every unit need by encrypted or confounded by the encryption of a higher-level unit. For example, a film may be rendered worthless to pirates if every other minute of film frames or particularly important plot or action scenes are encrypted or confounded.

In contrast, watermarking has the goal of placing a symbol and/or serial-number-style identification marks on the image stream which are detectable to analysis, but which are invisible or nearly invisible in the image (i.e., yielding no significant visual impairment). Thus, watermarking preferably is applied in portions of the decoding unit chain which are near the end of the hierarchy of units, to yield a minimum impact on each frame within a group of frames.

For example, FIG. **11** shows a diagram of the scope of encryption and watermarking as a function of unit dependency with respect to I, P, and B frames. Encryption of any frame confounds all subsequent dependent frames. Thus, encryption of the first I frame confounds all P and B frames derived from that I frame. In contrast, a watermark on that I frame generally would not carry over to subsequent frames, and thus it is better to watermark the larger number of B frames to provide greater prevalence of the watermark throughout the data stream.

Units of Video Information. A compressed MPEG-type or motion-compensated-wavelets bitstream is parsed by normally extracting and processing various fundamental units of compressed information in video. This is true of the most efficient compression systems such as MPEG-2, MPEG-4,

and motion-compensated wavelets (considering wavelets to have I, P, and B frame equivalents). Such units may consist of multi-frame units (such as a GOP), single frame units (e.g., I, P, and B frame types and their motion-compensated-wavelet equivalents), sub-frame units (such as AC and DC coefficients, macro blocks, and motion vectors), and "distributed units" (described below).

When GOPs are used as a unit of encryption, each GOP can be encrypted with independent methods and/or keys. In this way, each GOP can have the benefits of unique treatment and modularity, and can be decoded and/or decrypted in parallel or out-of-order with other GOPs in non-realtime or near-realtime (slightly delayed by a few seconds) applications (such as electronic cinema and broadcast). The final frames need only be ordered for final presentation.

As suggested above, encryption of certain units may confound proper decoding of other units that dependent on information derived from the encrypted unit. That is, some information within a frame may be required for decoding the video information of subsequent frames; encrypting only the earlier frame confounds decoding of later frames that are not otherwise encrypted. Thus, in selecting units to encrypt, it is useful to note how encryption of particular units can confound the usability of other, related units. For example, multiple frames spanning a GOP are influenced at various levels as set forth in TABLE 7:

TABLE 7

Encryption of this Unit:	Confounds:
I frame starting a GOP	entire associated GOP
P frame within a GOP	the remainder of the GOP
B frame within a GOP	only itself as a frame

Further, an entire frame need not be encrypted to confound some or all of a GOP. Sub-units of frames may be encrypted and still have a confounding affect, while reducing encryption and decryption processing time. For example, encryption of the certain intra-frame units influences subsequent frames at various levels as set forth in TABLE 8:

TABLE 8

Encryption of this Unit:	Confounds:
DC coefficients in an I frame (the top hierarchy unit of DC coefficients)	all frames in the associated GOP
DC coefficients in a P frame	the remainder of the associated GOP
DC Coefficients in a B frame (the bottom hierarchy unit of DC coefficients)	only that frame
motion vectors in a P frame	the remainder of the associated GOP
motion vectors in a B frame	only that frame
AC coefficients in an I frame (top hierarchy unit of AC coefficients)	the remainder of the associated GOP
AC coefficients in a P frame (bottom hierarchy unit of AC coefficients)	the remainder of the associated GOP
macroblock mode bits in a P frame (e.g., the macroblock modes "forward predict", "intra", and "4MV")	the remainder of the associated GOP
macroblock mode bits in a B frame ("forward", "backward", "bi-directional", "direct" mode bits in MPEG-4)	only that frame
"slice boundaries" (usually left-edge beginnings of macroblock lines, where various parameters are reset)	only the following slice

TABLE 8-continued

Encryption of this Unit:	Confounds:
left column of macroblocks for each P and B frame (e.g., motion vectors are reset at the left column, with each macroblock to the right being differentially determined from the left (and possibly above in MPEG-4))	that P frame and subsequent P frames for P; the corresponding B frame for B
base layer in a resolution enhancement layer system (top hierarchy unit in resolution)	itself and all higher resolution layers
enhancement layer in resolution (bottom and lower units of resolution)	itself and all higher resolution layers
base temporal layer (top hierarchy unit)	itself and all higher temporal layers
temporal enhancement layer(s) (B frames, lower temporal hierarchy units)	its own frames

Delay can be applied in many applications (such as broadcast and digital cinema), allowing an aggregation of items from units of like types to be encrypted before transmission. This allows for a "distributed unit", where the bits comprising an encryption/decryption unit are physically allocated across a data stream in conventional units of the type described above, making decrypting without knowledge of the key even more difficult. For decryption, a sufficient number of conventional units would be aggregated (e.g., in a buffer) and decrypted as a group. For example, DC coefficients can be collected into groups for an entire frame or GOP. Similarly, motion vectors are coded differentially and predicted one to the next from one macroblock to the next throughout the frame, and thus can be encrypted and decrypted in aggregations. Variable-length-coding tables can also be aggregated into groups and form modular units between "start codes". Additional examples of units or subunits that can be aggregated, encrypted, and then have the encrypted bits separated or spread in the data stream include: motion vectors, DC coefficients, AC coefficients, and quantizer scale factors.

Application of Encryption

In the preferred embodiment, one or more of the units described above (or other data stream units with similar properties) may be selected for encryption, and each unit can be encrypted independently rather than as a combined stream (as with MPEG-1, MPEG-2, and MPEG-4). Encryption of each unit may use different keys of different strengths (e.g., number of bits per key) and may use different encryption algorithms.

Encryption can be applied uniquely to each distinct copy of a work (when physical media is used, such as DVD-RAM), so that each copy has its own key(s). Alternatively, an encryption algorithm can be applied on the assembled stream with critical portions of the stream removed from the data stream or altered before encryption (e.g., by setting all motion vectors for the left-hand macroblocks to zero), thus defining a bulk distribution copy. The removed or altered portion can then be encrypted separately and uniquely for each display site, thereby defining a custom distribution copy that is sent separately to individual sites in a convenient manner (e.g., satellite transmission, modem, Internet, etc.). This technique is useful, for example, where the bulk of a work is distributed on a medium such as a DVD-ROM, while unique copies of the smaller critical compression units are separately sent, each with their own unique keys, to independent recipient destinations (e.g., by satellite, Internet, modem, express delivery, etc.). Only when the custom

portion is decrypted and recombined with the decrypted bulk distribution copy will the entire work be decodable as a video signal. The larger the bandwidth (size capacity) of such custom information, the larger the portion of the image that can be custom encrypted. This technique can be used with watermarking as well.

A variant of this approach is to encrypt a subset of units from a data stream as a custom distribution copy, and not encrypt the remaining units at all. The remaining units may be distributed in bulk form, separately from the custom distribution copy. Only when the custom portion is decrypted and recombined with the unencrypted bulk distribution copy will the entire work be decodable as a video signal.

One or more overall encryptions can be concatenated or combined with special customized encryptions for various of the crucial units of video decoding information. For example, the entire video data stream may be "lightly" encrypted (e.g., using a short key or simple algorithm) while certain key units of the data stream are more "heavily" encrypted (e.g., using a longer key or more complex algorithm). For example, in one embodiment, the highest resolution and/or temporal layers may be more heavily encrypted to define a premium signal that provides the best appearing image when properly decrypted. Lower layers of the image would be unaffected by such encryption. This approach would allow different grades of signal service for end-users.

If units are encrypted independently of each other, then decryption may be performed in parallel using one or more concurrently processed decryption methods on separate units within the compressed image stream.

Application of Watermarking

With respect to the units discussed above, and other units having similar properties, various points within a compressed video data stream are suitable for applying watermarks in various ways, including:

In transform space or realspace or combinations thereof.

In the least significant bits (LSBs) of the DC coefficients. For example, the DC coefficients can have extra bits (10 and 11 bits are allowed in MPEG2, and up to 14 bits in MPEG4). The low order bit(s) can code a specific watermark identifier without degrading the image in any visible way. Further, these low order bits might only be present in I frames, since a clear watermark need not be present on every frame.

In noise patterns within the LSBs of the AC coefficients.

In low amplitude overall picture low frequencies, coded one-frame-to-the-next, forming a visually undetectable imaged pattern. For example, this might be a small number of low signal amplitude letters or numbers on each frame, where each letter is very large and soft. For example, where a pixel should have a binary value of "84", the watermark process could instead set the value to "83"; the watermark at this location this has a value of "1". The difference is essentially invisible to the eye, but forms a code in the compressed data stream. Such an imaged pattern would be detected by subtracting the decoded image from the unperturbed (unwatermarked) decompressed original (and also from the uncompressed original source work), and then greatly increasing the amplitude. A series of very large blurry letters or numbers would then appear.

In frames which do not propagate (such as I frames, the last P frame before an I frame, and B frames), using marks of extremely low visibility. These frames also are displayed only briefly.

At slice boundaries (usually left-edge beginnings of macroblock lines).

Watermarks at these points generally comprise imposed patterns of minor pixel data variations. In some cases, these variations form images or symbols that are invisible or nearly invisible to the eye due to the very low amplitude of the bit variations in terms of pixel brightness and color and/or due to the brevity of display. For example, FIGS. **12**A and **12**B show diagrams of image frames **1200** with different types of watermarks. FIG. **12**A shows a frame **1200** with a single symbol ("X") **1202** in one corner. FIG. **12**B shows a frame **1200** with a set of marks (dots, in this example) **1204** scattered around the frame **1200**. Such watermarks are detectable only by data comparison to yield the watermark signal. For example, a precise decoder can detect LSB variations between an original work and a watermarked work that are invisible to the eye, but which uniquely watermark the customized copy of the original work.

Other forms of watermarking may be used that do not impose specific images or symbols, but do form unique patterns in the data streams. For example, certain decisions of coding are nearly invisible, and may be used to watermark a data stream. For example, minor rate control variations are invisible to the eye, but can be used to mark each copy such that each copy has a slightly different number of AC coefficients in some locations. Examples of other such decisions include:

Rate control variations within an I frame.

Rate control variations within P and B frames.

Specific AC coefficient allocations, affecting LSBs.

Similarly, second-best choices for motion vectors which are nearly as good as optimum motion vectors may be used to create a watermark code. Also, a system can use second-best selections for exactly the same SADs (sum of absolute differences, a common motion vector match criteria) when and where they occur. Other non-optimum (e.g., third and higher ranked) motion vector matches can also be used, if needed, with very little visual impairment. Such second-choice (and higher) motion vectors need only be used occasionally (e.g., a few per frame) in a coherent pattern to form a watermark code.

Image variations are less visible near the periphery of the frame (i.e., near the top, bottom, right, edge, and left edge). It is therefore better to apply image or symbol type watermarks to image edge regions if the selected watermark is possibly slightly visible. Watermark methods of very low visibility (such as second-best motion vectors or rate control variations) can be used everywhere on the image.

Watermarking also can be coded as a unique serial-number-style code for each watermarked copy. Thus, 1,000 copies of an original work would each be watermarked in a slightly different fashion using one or more techniques described above. By tracking where each watermarked copy is shipped, it is possible to determine which copy was the source of unauthorized duplication when a watermark is found in an unauthorized copy.

Watermark Detection

Most of these methods for watermarking require that the original decompressed image be used as a reference for comparison with each watermarked copy in order to reveal (decipher) the watermark. The differences between the two images will disclose the watermark. Thus, it is necessary to

keep the master decompressed source in a secure place. Security is required because possession of a copy of the master decompressed source provides sufficient information with which to defeat many of the watermarking methods. However, theft of the watermarking comparison master is itself detectable, since the master is automatically "watermarked" to be a perfect match to itself. When the master is used to confound a copy (i.e., find and remove the watermark), it implies possession of a master.

Use of low amplitude, large blurry symbols or images as a watermark has the advantage that such symbols or images are detectable not only by comparison against the decompressed master source, but also by comparison against the uncompressed original work. Thus, an original uncompressed work can be stored in an independent secure environment, such that low-amplitude watermarks can be used within the original (otherwise unvaried) compressed master source. In this way, a watermark comparison reference would remain if either the original work or the compressed/decompressed master source are stolen. However, possession of both would allow defeat of both classes of watermarks.

Watermark Vulnerability

Important to the use of watermarking is an understanding of methods that might be used to defeat or confound the detection of such marks. Some watermark methods are subject to confounding by adding small amounts of noise to the image. While this may degrade the image quality somewhat, the degradation might still be visually small, but sufficient to confound deciphering of the watermark. Watermark techniques which are vulnerable to being confounded by adding noise include use of LSBs in DC or AC coefficients.

Other watermark methods are much more difficult to confound using noise. Those watermark techniques which are resistant to confounding by noise, but which can still be readily detected, include low amplitude overall picture low frequency image variations (such as a low-amplitude, very blurry large word superimposed on the image), second-best motion vectors, and minor rate control variations.

It is thus valuable to utilize multiple methods of watermarking in order to defeat simple methods which attempt to confound the detection of the watermark. Further, use of encryption ensures that watermarks cannot be altered unless the encryption is compromised. Accordingly, watermarking preferably is used in conjunction with encryption of a suitable strength for the application.

Tool-Kit Approach

The various concepts of encryption and watermarking comprising this aspect of the invention are preferably embodied as a set of tools which can be applied to the task of protecting valuable audio/video media. The tools can be combined by a content developer or distributor in various ways, as desired, to create a protection system for a layered compressed data stream.

For example, FIG. **13** is a flowchart showing one method of applying the encryption techniques of the invention. A unit to be encrypted is selected (STEP **1300**). This may be any of the units described above (e.g., a distributed unit, a multi-frame unit, a single frame unit, or a sub-frame unit), or other units with similar properties. An encryption algorithm is selected (STEP **1302**). This may be a single algorithm applied throughout an encryption session, or may be a selection per unit, as noted above. Suitable algorithms are well known, and include, for example, both private and public key algorithms, such as DES, Triple DES, RSA, Blowfish, etc. Next, one or more keys are generated (STEP **1304**). This involves selection of both key length and key value. Again, this may be a single selection applied throughout an encryption session, or truly may be a selection per unit, as noted above. Lastly, the unit is encrypted using the selected algorithm and key(s) (STEP **1306**). The process then repeats for a next unit. Of course, a number of the steps may be carried out in different orders, particularly steps **1300**, **1302**, and **1304**.

For decompression, the relevant key(s) would be applied to decrypt the data stream. Thereafter, the data stream would be decompressed and decoded, as described above, to generate a displayable image.

FIG. **14** is a flowchart showing one method of applying the watermarking techniques of the invention. A unit to be watermarked is selected (STEP **1400**). Again, this may be any of the units described above (e.g., a distributed unit, a multi-frame unit, a single frame unit, or a sub-frame unit), or other units with similar properties. One or more watermarking techniques are then selected, such as a noise-tolerant method and a non-noise tolerant method (STEP **1402**). This may be a single selection applied throughout a watermarking session, or truly may be a selection per unit (or class of units, where two or more watermarking techniques are applied to different types of units). Lastly, the selected unit is watermarked using the selected technique (STEP **1404**). The process then repeats for a next unit. Of course, a number of the steps may be carried out in different orders, particularly steps **1400** and **1402**. Further,

Key Management

Encryption/decryption keys may be tied to various items of information, in order to construct more secure or synchronized keys. For example, public or private encryption and decryption keys may be generated to include or be derived from any of the following components:

Previous keys.

A serial number of a destination device (e.g., a theater projector having a secure serial number).

A date or time range (using a secure clock), such that the key only works during specific time periods (e.g., only on certain days of the week, or only for a relative period, such as one week). For example, an encryption system may plan for the use of a secure GPS (global positioning satellite) in the decoder as a source for time. The decrypting processor would only need access to that secure time source to decrypt the image file or stream.

Location of the decryption processor. A GPS capability would allow fairly exact real-time location information to be incorporated into a key. An internet protocol (IP) static address of a known destination could also be used.

Accounting records of the number of previous showings of a work, as reported (manually or automatically) by each theater.

A "PIN" (personal identification number) of a specific authorizing person (e.g., a theater manager).

Physical customized-encrypted movies (such as DVD's, where each is uniquely keyed to a specific movie theater) can be used such that the possession of the encrypted movie itself by a key holder at the intended site is a form of key authorization for a subsequent movie. For example, playback of a portion of the movie and transmission of that portion to a remote key generation site can be part of the key authorization protocol. Further, the use of the encrypted movie data as a

key element can be tied to a secure media erasure key when a distribution copy is stored on an erasable media, such as hard disk or DVD-RAM. In this way, the previous movie is erased as part of the key process for obtaining the new movie.

Keys can also be active for a specific number of showings or other natural units of use, requiring new keys subsequently.

Various methods of managing distribution of keys for decryption can be applied. Different key management strategies can be applied to each type of use and each type of data delivery (whether network data transfer, satellite, or physical disk or tape media). Following are examples of key distribution and management procedures:

Keys can be stored on a media (e.g., floppy disk, CDROM) and physically shipped to a destination via overnight shipping, or transmitted electronically or in text format (e.g., by facsimile, email, direct-connect data transmission, Internet transmission, etc.).

Public key methods can also be used with local unique keys, as well as authenticated third-party key verification.

Keys may be themselves encrypted and electronically transmitted (e.g., via direct-connect data transmission, Internet transmission, email, etc.), with pre-defined rules at each destination (e.g., theater) for how to decrypt and apply the keys.

Possession of a current key may be required as a condition of obtaining or utilizing new keys. The current key value may be transmitted to a key management site by any suitable means, as noted above; the new key can be returned by one of the means noted above.

Use of a decryption key may require a "key handshake" with a key management site that validates or authorizes application of the key for every instance of decryption. For example, a decryption key may need to be combined with additional symbols maintained by the key management site, where the specific symbols vary from use to use. Use of key handshakes can be used for every showing, or for every length of time of use, or for other natural value units. Since such uses may also be a natural unit of accounting, key management can also be integrally tied to accounting systems which log uses or use durations, and apply appropriate charges to the key holder (e.g., rental charges per showing for a theater). For example, both key management and use logging can be tied to a key authorization server system which can simultaneously handle the accounting for each authorized showing or use duration.

Some keys may be pre-authorized keys versus keys which are authorized onsite. Pre-authorized keys generally would be issued one at a time by a key management site. For onsite key authorization, a key management site may issue a set of keys to a theater, thus allowing a local manager to authorize additional decryptions (and hence showings) of a movie which is more popular than originally projected, to accommodate audience demand). If such keys are used, the system is preferably designed to signal (e.g., by email or data record sent over the Internet or by modem) the key management site about the additional showings, for accounting purposes.

CONCLUSION

Different aspects of the invention that are considered to be novel include (without limitation) the following concepts:

Encryption applied to layered compression

Watermarking applied to layered compression

Unique encryption applied to each layer in a layered system, requiring different keys, authorizations, or algorithms to unlock each independent layer

Unique watermarking applied to each layer in order to identify the particular layer (using a method such as a serial number)

Utilizing sub-frame units of compressed image streams for encryption or watermarking

Utilizing multiple simultaneous watermark methods in order to protect against methods which attempt to confound the detection of a particular type of watermark

Utilizing multiple simultaneous encryption methods and strengths, thus requiring multiple independent decryption systems in order to decode the various units within the single-layer or layered compressed image stream

Parallel decryption using one or more simultaneous decryption methods on various units within the compressed image stream

Tying keys to accounting systems

Tying encryption to specific media and/or a specific target location or serial number

Tying encryption to a secure clock and date range of use

Tying encryption to a specific number of uses with a secure use counter

Using the movie itself as a key to obtain new movies or keys

Erasure of the movie data on physical media when used as a key to obtain new movies, or when the duration of authorized use expires

Use of a flexible key toolkit approach, so that key use methods can be continuously refined in order to improve flexibility, convenience of use, and security

Use second-best (or third, etc., best) motion vectors as a watermark technique

Use of minor rate control variations as a watermark technique (applied to any combination of I, B, and/or P-type frames, as well as their motion-compensated-wavelet equivalents)

Use of low-order bit variations in DC and/or AC coefficients as a watermark technique (applied to I, B, and/or P type frames, and their equivalents).

Use of low amplitude blurry letters or numbers uniquely added to each copy of the image during compression to uniquely watermark each copy

Applying encryption to portions of the bitstream which affect large portions of the image stream (high influence for encryption)

Applying overall encryption for the bulk of a work, plus customized encryption(s) for selected units

Encrypting small portions of the data stream, and sending these by point-to-point methods to each specific location (including tying to serial numbers, keys, personnel codes, IP addresses, and other unique identifiers at that specific location)

Applying watermarking to portions of the bitstream which have low influence on other frames, to minimize visibility

Use of image edge regions (near top, bottom, left edge, and right edge) for potentially visible watermarks (such as low-amplitude letters and numbers or LSBs in DC or AC coefficients), to minimize visual impact

Extraction of sub-frame unit influence points for independent encryption, such as left column (slice start) motion vectors, DC and AC Coefficients in I frames, prediction mode bits, control codes, etc.

Computer Implementation

The invention may be implemented in hardware (e.g., an integrated circuit) or software, or a combination of both. However, preferably, the invention is implemented in computer programs executing on one or more programmable computers each comprising at least a processor, a data storage system (including volatile and non-volatile memory and/or storage elements), an input device, and an output device. Program code is applied to input data to perform the functions described herein and generate output information. The output information is applied to one or more output devices, in known fashion.

Each such program may be implemented in any desired computer language (including machine, assembly, or high level procedural, logical, or object oriented programming languages) to communicate with a computer system. In any case, the language may be a compiled or interpreted language.

Each such computer program is preferably stored on a storage media or device (e.g., ROM, CD-ROM, or magnetic or optical media) readable by a general or special purpose programmable computer system, for configuring and operating the computer when the storage media or device is read by the computer system to perform the procedures described herein. The inventive system may also be considered to be implemented as a computer-readable storage medium, configured with a computer program, where the storage medium so configured causes a computer system to operate in a specific and predefined manner to perform the functions described herein.

A number of embodiments of the present invention have been described. Nevertheless, it will be understood that various modifications may be made without departing from the spirit and scope of the invention. For example, while the preferred embodiment uses MPEG-2 coding and decoding, the invention will work with any comparable standard that provides equivalents of I, B, and P frames and layers. Accordingly, it is to be understood that the invention is not to be limited by the specific illustrated embodiment, but only by the scope of the appended claims.

What is claimed is:

1. A method for encrypting a data stream of video information encoded and compressed into a base layer and at least one enhancement layer, including the steps of:

(a) selecting at least one encryption algorithm;

(b) selecting at least one unit of one of the base layer or at least one enhancement layer to encrypt;

(c) applying at least one selected encryption algorithm to encrypt each selected unit into an encrypted unit; and

(d) applying a first unique selected encryption algorithm to selected units from the base layer and a second unique selected encryption algorithm to selected units from the at least one enhancement layer.

2. The method of claim **1**, further comprising selecting units to encrypt to confound decompression or decoding of subsequent units that depend on information in the units to encrypt.

3. The method of claim **1**, wherein at least one selected unit is a multi-frame unit.

4. The method of claim **1**, wherein at least one selected unit is a frame unit.

5. The method of claim **1**, wherein at least one selected unit is a sub-frame unit.

6. The method of claim **1**, wherein at least one selected unit is a distributed unit.

7. The method of claim **1**, further comprising decrypting each encrypted unit.

8. The method of claim **1**, further comprising decrypting a plurality of encrypted units in parallel.

9. A method for encrypting a data stream of video information encoded and compressed into a base layer and at least one enhancement layer, including the steps of:

(a) selecting at least one encryption algorithm;

(b) selecting at least one unit of one of the base layer or at least one enhancement layer to encrypt; and

(c) applying at least one selected encryption algorithm to encrypt each selected unit into an encrypted unit, wherein the at least one selected encryption algorithm differs between at least two selected units.

10. A method for encrypting a data stream of video information encoded and compressed into a base layer and at least one enhancement layer, including the steps of:

(a) selecting at least one encryption algorithm;

(b) selecting at least one unit of one of the base layer or at least one enhancement layer to encrypt;

(c) applying at least one selected encryption algorithm to encrypt each selected unit into an encrypted unit, wherein each selected encryption algorithm has a key having a key length; and

(d) varying at least one of a value for the key and the key length for at least some of the selected units.

11. A method for encrypting a data stream of video information encoded and compressed into a base layer and at least one enhancement layer, including the steps of:

(a) selecting at least one encryption algorithm;

(b) selecting at least one unit of one of the base layer or at least one enhancement layer to encrypt;

(c) applying at least one selected encryption algorithm to encrypt each selected unit into an encrypted unit;

(d) encrypting a subset of selected units from the data stream of video information to create an encrypted custom distribution copy;

(e) grouping remaining units from the data stream of video information to create a bulk distribution copy, wherein the remaining units comprise units from the data stream of video information that are different from the subset of selected units; and

(f) distributing the bulk distribution copy separately from the encrypted custom distribution copy.

12. A method for encrypting a data stream of video information encoded and compressed into a base layer and at least one enhancement layer, including the steps of:

(a) selecting at least one encryption algorithm;

(b) selecting at least one unit of one of the base layer or at least one enhancement layer to encrypt; and

(c) applying at least one selected encryption algorithm to encrypt each selected unit into an encrypted unit, wherein each selected encryption algorithm has a key generated from at least one or more of the following factors: a previous key; a serial number of a destination decoding device; a date or time range determined by a secure clock; a location identifier; a number of previous uses of a work; a PIN of a specific authorizing person; or portions of a previously encrypted data stream of video information.

13. A method for encrypting a data stream of video information encoded and compressed into a base layer and at least one enhancement layer, including the steps of:

(a) selecting at least one encryption algorithm;

(b) selecting at least one unit of one of the base layer or at least one enhancement layer to encrypt; and

(c) applying at least one selected encryption algorithm to encrypt each selected unit into an encrypted unit, wherein each selected encryption algorithm has a key;

(d) storing a plurality of encrypted units on an erasable media; and

(e) erasing the encrypted units upon an expiration of the keys.

14. A system for encrypting a data stream of video information encoded and compressed into a base layer and at least one enhancement layer, including:

means for selecting at least one encryption algorithm;

means for selecting at least one unit of one of the base layer or at least one enhancement layer to encrypt;

means for applying at least one selected encryption algorithm to encrypt each selected unit into an encrypted unit; and

means for applying a first unique selected encryption algorithm to selected units from the base layer and a second unique selected encryption algorithm to selected units from the at least one enhancement layer.

15. The system of claim **14**, further comprising means for selecting units to encrypt to confound decompression or decoding of subsequent units that depend on information in the units to encrypt.

16. The system of claim **14**, wherein at least one selected unit is a multi-frame unit.

17. The system of claim **14**, wherein at least one selected unit is a frame unit.

18. The system of claim **14**, wherein at least one selected unit is a sub-frame unit.

19. The system of claim **14**, wherein at least one selected unit is a distributed unit.

20. The system of claim **14**, further comprising means for decrypting each encrypted unit.

21. The system of claim **14**, further comprising means for decrypting a plurality of encrypted units in parallel.

22. A system for encrypting a data stream of video information encoded and compressed into a base layer and at least one enhancement layer, including:

means for selecting at least one encryption algorithm;

means for selecting at least one unit of one of the base layer or at least one enhancement layer to encrypt; and

means for applying at least one selected encryption algorithm to encrypt each selected unit into an encrypted unit, wherein the at least one selected encryption algorithm differs between at least two selected units.

23. A system for encrypting a data stream of video information encoded and compressed into a base layer and at least one enhancement layer, including:

means for selecting at least one encryption algorithm;

means for selecting at least one unit of one of the base layer or at least one enhancement layer to encrypt;

means for applying at least one selected encryption algorithm to encrypt each selected unit into an encrypted unit, wherein each selected encryption algorithm has a key having a key length; and

means for varying at least one of a value for the key and the key length for at least some of the selected units.

24. A system for encrypting a data stream of video information encoded and compressed into a base layer and at least one enhancement layer, including:

means for selecting at least one encryption algorithm;

means for selecting at least one unit of one of the base layer or at least one enhancement layer to encrypt;

means for applying at least one selected encryption algorithm to encrypt each selected unit into an encrypted unit;

means for encrypting a subset of selected units from the data stream of video information to create an encrypted custom distribution copy;

means for grouping remaining units from the data stream of video information to create a bulk distribution copy, wherein the remaining units comprise units from the data stream of video information that are different from the subset of selected units; and

means for distributing the bulk distribution copy separately from the encrypted custom distribution copy.

25. A system for encrypting a data stream of video information encoded and compressed into a base layer and at least one enhancement layer, including:

means for selecting at least one encryption algorithm;

means for selecting at least one unit of one of the base layer or at least one enhancement layer to encrypt; and

means for applying at least one selected encryption algorithm to encrypt each selected unit into an encrypted unit, wherein each selected encryption algorithm has a key generated from at least one or more of the following factors: a previous key; a serial number of a destination decoding device; a date or time range determined by a secure clock; a location identifier; a number of previous uses of a work; a PIN of a specific authorizing person; or portions of a previously encrypted data stream of video information.

26. A system for encrypting a data stream of video information encoded and compressed into a base layer and at least one enhancement layer, including:

means for selecting at least one encryption algorithm;

means for selecting at least one unit of one of the base layer or at least one enhancement layer to encrypt;

means for applying at least one selected encryption algorithm to encrypt each selected unit into an encrypted unit, wherein each selected encryption algorithm has a key;

means for storing a plurality of encrypted units on an erasable media; and

means for erasing the encrypted units upon an expiration of the keys.

27. A computer program, stored on a computer-readable medium, for encrypting a data stream of video information encoded and compressed into a base layer and at least one enhancement layer, the computer program comprising instructions for causing a computer to:

select at least one encryption algorithm;

select at least one unit of one of the base layer or at least one enhancement layer to encrypt;

apply at least one selected encryption algorithm to encrypt each selected unit into an encrypted unit; and

apply a first unique selected encryption algorithm to selected units from the base layer and a second unique selected encryption algorithm to selected units from the at least one enhancement layer.

28. The computer program of claim **27**, further including instructions for causing the computer to select units to encrypt to confound decompression or decoding of subsequent units that depend on information in the units to encrypt.

29. The computer program of claim **27**, wherein at least one selected unit is a multi-frame unit.

30. The computer program of claim **27**, wherein at least one selected unit is a frame unit.

31. The computer program of claim **27**, wherein at least one selected unit is a sub-frame unit.

32. The computer program of claim **27**, wherein at least one selected unit is a distributed unit.

33. The computer program of claim **27**, further comprising instructions for causing the computer to decrypt each encrypted unit.

34. The computer program of claim **27**, further comprising instructions for causing the computer to decrypt a plurality of encrypted units in parallel.

35. A computer program, stored on a computer-readable medium, for encrypting a data stream of video information encoded and compressed into a base layer and at least one enhancement layer, the computer program comprising instructions for causing a computer to:

select at least one encryption algorithm;

select at least one unit of one of the base layer or at least one enhancement layer to encrypt; and

apply at least one selected encryption algorithm to encrypt each selected unit into an encrypted unit, wherein the at least one selected encryption algorithm differs between at least two selected units.

36. A computer program, stored on a computer-readable medium, for encrypting a data stream of video information encoded and compressed into a base layer and at least one enhancement layer, the computer program comprising instructions for causing a computer to:

select at least one encryption algorithm;

select at least one unit of one of the base layer or at least one enhancement layer to encrypt;

apply at least one selected encryption algorithm to encrypt each selected unit into an encrypted unit, wherein each selected encryption algorithm has a key having a key length; and

vary at least one of a value for the key and the key length for at least some of the selected units.

37. A computer program, stored on a computer-readable medium, for encrypting a data stream of video information encoded and compressed into a base layer and at least one enhancement layer, the computer program comprising instructions for causing a computer to:

select at least one encryption algorithm;

select at least one unit of one of the base layer or at least one enhancement layer to encrypt;

apply at least one selected encryption algorithm to encrypt each selected unit into an encrypted unit;

encrypt a subset of selected units from the data stream of video information to create an encrypted custom distribution copy;

group remaining units from the data stream of video information to create a bulk distribution copy, wherein the remaining units comprise units from the data stream of video information that are different from the subset of selected units; and

distribute the bulk distribution copy separately from the encrypted custom distribution copy.

38. A computer program, stored on a computer-readable medium, for encrypting a data stream of video information encoded and compressed into a base layer and at least one enhancement layer, the computer program comprising instructions for causing a computer to:

select at least one encryption algorithm;

select at least one unit of one of the base layer or at least one enhancement layer to encrypt; and

apply at least one selected encryption algorithm to encrypt each selected unit into an encrypted unit, wherein each selected encryption algorithm has a key generated from at least one or more of the following factors: a previous key; a serial number of a destination decoding device; a date or time range determined by a secure clock; a location identifier; a number of previous uses of a work; a FIN of a specific authorizing person; or portions of a previously encrypted data stream of video information.

39. A computer program, stored on a computer-readable medium, for encrypting a data stream of video information encoded and compressed into a base layer and at least one enhancement layer, the computer program comprising instructions for causing a computer to:

select at least one encryption algorithm;

select at least one unit of one of the base layer or at least one enhancement layer to encrypt;

apply at least one selected encryption algorithm to encrypt each selected unit into an encrypted unit, wherein each selected encryption algorithm has a key;

store a plurality of encrypted units on an erasable media;

erase the encrypted units upon an expiration of the keys.

* * * * *