Trials@uspto.gov
571.272.7822

Paper 12
Date: August 20, 2020

UNITED STATES PATENT AND TRADEMARK OFFICE

BEFORE THE PATENT TRIAL AND APPEAL BOARD

LOUISIANA-PACIFIC CORPORATION,
Petitioner,

v.

HUBER ENGINEERED WOODS LLC,
Patent Owner.

IPR2020-00596
Patent 8,474,197 B2

Before JENNIFER MEYER CHAGNON, MICHAEL L. WOODS, and FREDERICK C. LANEY, *Administrative Patent Judges.*

WOODS, *Administrative Patent Judge.*

DECISION
Denying Institution of *Inter Partes* Review
35 U.S.C. § 314, 37 C.F.R. § 42.4

I. INTRODUCTION

Louisiana-Pacific Corporation ("Petitioner") filed a Petition (Paper 1, "Pet.") requesting *inter partes* review of claims 1–20 of U.S. Patent No. 8,474,197 B2 ("the '197 patent"). Pet. 4. Huber Engineered Woods LLC ("Patent Owner") filed a Preliminary Response (Paper 10, "Prelim. Resp.") to the Petition, contending that the Petition should be denied as to all challenged claims. Prelim. Resp. 1.

We have authority to determine whether to institute an *inter partes* review. *See* 35 U.S.C. § 314 (2018); 37 C.F.R. § 42.4(a) (2019). Section 314(a) of Title 35 of the United States Code provides that an *inter partes* review may not be instituted "unless . . . the information presented in the petition . . . shows that there is a reasonable likelihood that the petitioner would prevail with respect to at least 1 of the claims challenged in the petition." Upon consideration of the evidence and arguments in the Petition (including its supporting testimonial evidence) as well as the evidence and arguments in the Preliminary Response, for the reasons below, we do not institute an *inter partes* review of any challenged claim.[1]

A. Related Proceedings

The parties represent that the '197 patent is at issue in *Huber Engineered Woods LLC v. Louisiana-Pacific Corp.*, USDC, District of

[1] Because we deny institution upon consideration of the merits of Petitioner's challenges (*see infra* Part II), Patent Owner's argument that we should exercise our discretion under 35 U.S.C. § 314(a) to deny institution under the factors set forth in the recent precedential Order in *Apple Inc. v. Fintiv, Inc.*, IPR2020-00019, Paper 11 (PTAB Mar. 20, 2020) (precedential) (*see* Prelim. Resp. 18–19) is moot and we do not address it in this Decision.

Delaware, No. 1:19-cv-00342-LPS, filed February 18, 2019. Pet. 5; Paper 4, 2. We also identify proceedings in IPR2019-00919, IPR2020-00600, IPR2020-00601, IPR2020-00604, IPR2020-00605, IPR2020-00606, IPR2020-00607, and IPR2020-00609 as challenging related patents. Each of these related patents claims priority to U.S. Provisional Application No. 60/547,031, filed on February 23, 2004. *See, e.g.*, Ex. 1001, code (60). Of these related proceedings, however, only IPR2019-00919 has been instituted; it involves Petitioner's challenge to Patent Owner's patent number 9,546,479 B2. *See* IPR2019-00919, Paper 9.

B. The '197 Patent (Ex. 1001)

The '197 patent, titled "Panel for Sheathing System and Method," describes a sheathing panel including a "water resistant barrier layer secured atop its outward facing surface." Ex. 1001, codes (54), (57).

To illustrate the '197 patent's panel and sheathing system, we first reproduce its Figure 1, below:

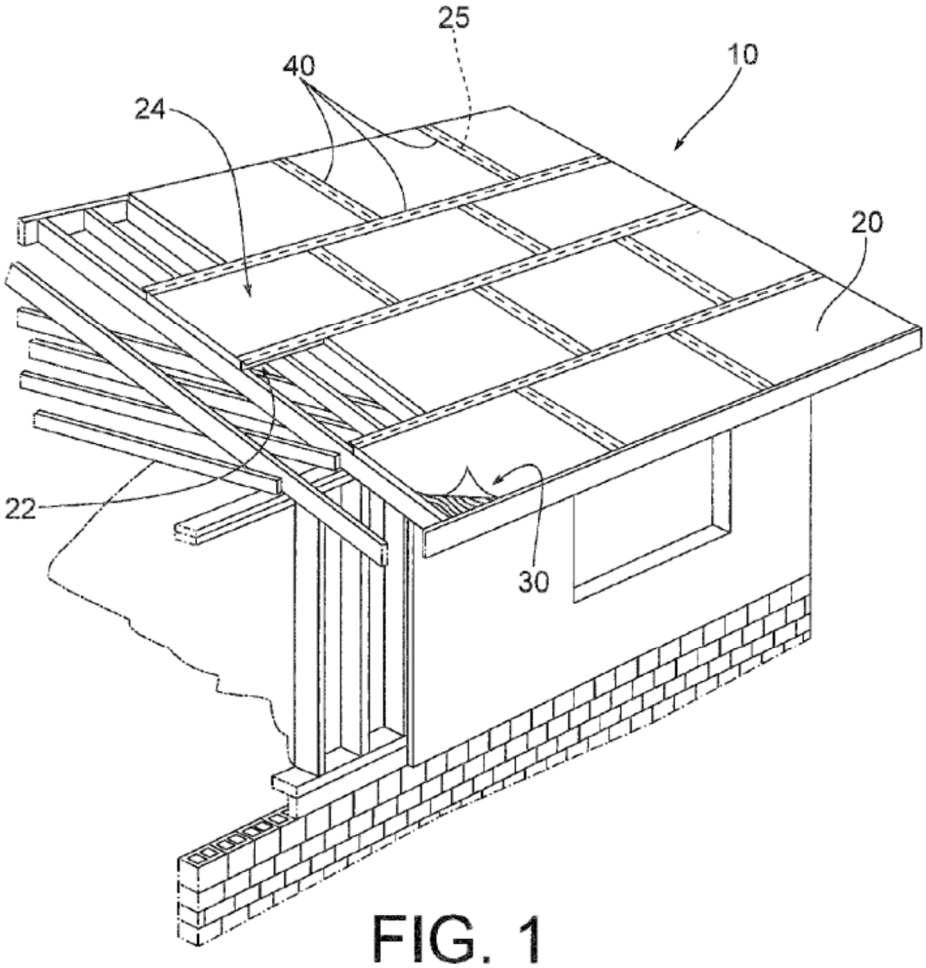

FIG. 1

Figure 1 depicts a "panelized roofing system utilizing the panel of the present invention." Ex. 1001, 3:19–20. In particular, Figure 1 depicts panelized roof sheathing construction system 10 with panels 20 attached to a building frame structure in abutting relationship. *Id.* at 4:49–52. The system preferably includes water-resistant sealing means 40 sealing joints 25 between adjacent panels 20. *Id.* at 4:61–64.

Although Figure 1 depicts a panelized roofing system, the '197 patent describes, specifically, the panels for use in roof or wall construction. *See, e.g.*, *id.* at 4:41–45.

We also reproduce Figure 2 of the '197 patent, below:

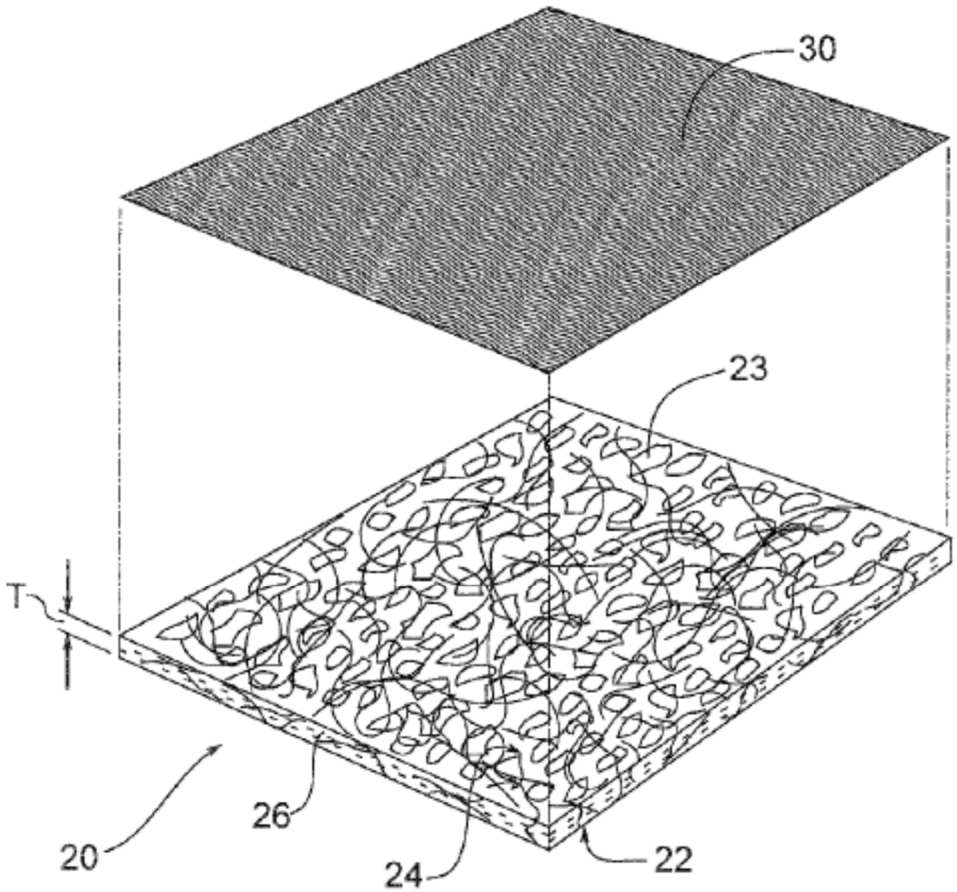

Figure 2 depicts an embodiment of the panel. Ex. 1001, 3:21–22. Specifically, Figure 2 illustrates panel 20, which is preferably made of an oriented strand board substrate ("OSB") having two surfaces 22, 24 with core layer 26 disposed between the layers. *Id.* at 4:67–5:3. Barrier layer 30 is secured to the outward facing surface of panel 20. *See id.* at 6:10–13 (referencing similar Figure 3). The '197 patent describes that barrier layer 30 is resistant to bulk water but permeable to water vapor. *Id.* at 6:42–43.

We next reproduce the '197 patent's Figure 9A, below:

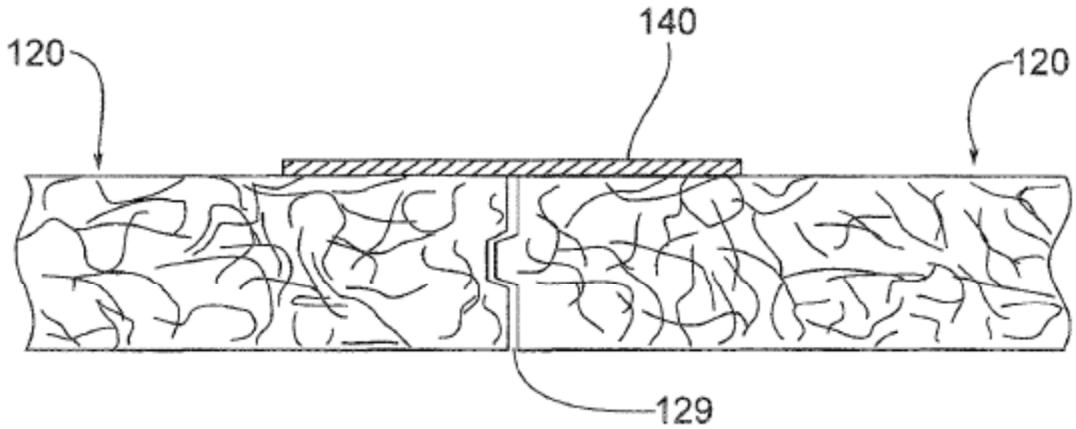

FIG. 9A

Figure 9A depicts a cross-sectional view of two adjacent panels according to an embodiment of the invention. Ex. 1001, 3:44–46. In particular, Figure 9A depicts an embodiment of two panels 120 secured with tongue-and-groove joint 129 (*id.* at 16:4–7) and with a strip of water-resistant pressure-sensitive seam sealant 140, which is preferably a tape (*id.* at 16:64–17:4).

C. Illustrative Claims

Claims 1, 12, and 20 are independent. Ex. 1001, 22:48–23:24. Independent claims 1 and 12 are representative of the subject matter at issue and are reproduced below, with emphases added to certain limitations addressed in this decision.

> 1. A panel system to externally envelope a structure, the system comprising:
>
> at least two adjacent lignocellulosic panels, each panel including an outer surface, an inner surface, and at least one edge extending therebetween, *each panel aligned with its at least one edge proximate to the at least one edge of the adjacent panel and defining a longitudinal joint between the two adjacent panels*;

a barrier layer secured to the outer surface or the inner surface of each panel, the barrier layer being substantially bulk water resistant and substantially water vapor permeable; and

a bulk water resistant edge sealant sealing the joint between the proximate edges of the two adjacent panels.

12. A method of externally sheathing a building structure, the method comprising:

obtaining at least two panel assemblies, each panel assembly including

a lignocellulosic panel including

an outer surface;

an inner surface;

and at least one edge; and

a barrier layer secured to the outer surface of each panel, the barrier layer being substantially bulk water resistant and substantially water vapor permeable;

positioning the panel assemblies adjacent to each other such that the respective edges are proximate to each other and define a longitudinal joint therebetween and such that the respective inner surfaces contact the structure;

fastening each panel assembly to the structure; and

sealing the joint between the edges of the panel.

Id. at 21:49–62, 22:25–42 (emphases and indentations added).

D. References Relied Upon

Petitioner's challenges rely on the following references (Pet. 8–16):

Name	Reference	Ex. No.
APA	APA Engineered Wood Handbook	1005
Alaska	Building in Alaska: Permeability of Common Building Material to Water Vapor	1008
StoGuard-2001	Press Release titled, "Sto Corp. Launches Sto Guard Housewrap Alternative"	1014
StoGuard-2003	Press Release titled, "Sto Guard a seamless, fluid-applied air and moisture barrier, provides superior protection under most claddings. It does what other wraps only pretend to do"	1015
ASTM D5795	Standard Test Method for Determination of Liquid Water Absorption of Coated Hardboard And Other Composite Wood Products Via 'Cobb Ring' Apparatus	1006
ASTM Report	Interlaboratory Study to Establish Precision Statements for ASTM D5795, Test Method for Determination of Liquid Water Permeability of Applied Coatings on Hardboard and Other Composite Wood Products Via 'Cobb Ring' Apparatus	1007
ASTM E96	Standard Test Methods for Water Vapor Transmission of Materials	1016
Van Wagoner	US Pat. No. 4,719,723, issued Jan. 19, 1988	1018
Hsu	US Pat. No. 5,616,419, issued Apr. 1, 1997	1026
Ou	US Pat. No. 6,737,155 B1, issued May 18, 2004	1020
Lionel	US Pat. No. 6,901,712 B2, issued June 7, 2005	1019
Arnold	Installing Housewrap	1022
Grace	Wall-Sheathing Seam Tape	1023
DuPont	Press Release titled, "Tyvek Tape"	1009

Name	Reference	Ex. No.
Forbes	GB2364338, published Jan. 23, 2002	1038
Kenji	JP2001-020415, published Jan. 23, 2001	1039 & 1040 (English translation)
Flack	US Pat. No. 4,828,635, issued May 9, 1989	1041
Maietta	US Pat. No. 5,732,520, issued Mar. 31, 1998	1042
Hedquist	CA 1,181,565, issued Jan. 29, 1985	1043
Hoffman	US Pat. No. 5,147,486, issued Sept. 15, 1992	1044
PS1-95	Construction and Industrial Plywood; Voluntary Product Standard PS1-95	1045
Robell	US Pat. No. 6,115,926, issued Sept. 12, 2000	1046
Elliott	US Pat. No. 3,284,967, issued Nov. 15, 1966	1050
Day	US Pat. No. 5,632,095, issued May 27, 1997	1051
Byrd	US Pat. Pub. No. 2004/0226247, published Nov. 18, 2004	1052
Peng	US Pat. No. 7,159,368 B2, issued Jan. 9, 2007	1054
Kligler	US Pat. No. 6,584,742 B1, issued July 1, 2003	1055
Martz	US Pat. No. 5,061,258, issued Oct. 29, 1991	1056
English	US Pat. No. 5,259,236, issued Nov. 9, 1993	1057
DiPede	US Pat. No. 6,925,766 B2, issued Aug. 9, 2005	1058
APA Glossary	APA Panel Handbook & Grade Glossary, published April 1997	1047

E. Alleged Grounds of Unpatentability

Petitioner contends that claims 1–20 of the '197 patent are unpatentable under the following grounds:

Claims Challenged	35 U.S.C. §[2]	Basis[3]
1–20	103(a)	APA in view of StoGuard-2001 and StoGuard-2003, in further view of Peng, Flack, ASTM D5795, ASTM Report, Alaska, ASTM E96, Hsu, Van Wagoner, Elliott, Hedquist, Day, Robell, Lionel, Arnold, Grace, DuPont, Glossary, Forbes, Martz, DiPede, Kligler, Byrd, Maietta, English, PS1-95, and Hoffman
1–20	103(a)	Forbes in view of Peng and Flack, in further view of ASTM D5795, ASTM Report, Alaska, ASTM E96, APA, Hsu, Van Wagoner, Hedquist, Day, Lionel, Elliott, Arnold, Grace, DuPont, Glossary, Martz, DiPede, Kligler, Byrd, Maietta, English, PS1-95, and Hoffman
1–20	103(a)	Kenji in view of Peng and Flack, in further view of ASTM D5795, ASTM Report, Alaska, ASTM E96, APA, Hsu, Van Wagoner, Hedquist, Day, Lionel, Elliott, Arnold, Grace, DuPont, Glossary, Forbes, Martz, DiPede, Kligler, Byrd, Maietta, English, PS1-95, and Hoffman

[2] The relevant sections of the Leahy-Smith America Invents Act ("AIA"), Pub. L. No. 112–29, 125 Stat. 284 (Sept. 16, 2011), took effect on March 16, 2013. Because the effective filing date of the '197 patent is before that date, our citations to Title 35 are to its pre-AIA version. *See* Ex. 1001, codes (22), (60), (63).

[3] We reproduce the summary of asserted grounds as set forth by Petitioner. *See* Pet. 17. Several of the references cited are applied only to certain dependent claims. The specific combinations of art applied to each claim is set forth on pages 25–75 of the Petition.

Petitioner also relies on the declaration testimony of Dr. Peter E. Laks (Ex. 1002) in support of its Petition. *See, e.g.*, Pet. 27 (referencing Ex. 1002).

II. ANALYSIS

A. Claim Construction

In an *inter partes* review proceeding for a petition filed on or after November 13, 2018, a patent claim shall be construed using the same claim construction standard that would be used to construe the claim in a civil action under 35 U.S.C. § 282(b). 37 C.F.R. § 42.100(b). This rule adopts the same claim construction standard used by Article III federal courts, which follow *Phillips v. AWH Corp.*, 415 F.3d 1303 (Fed. Cir. 2005) (en banc), and its progeny. Under the *Phillips* standard, the words of a claim are generally given their "ordinary and customary meaning," which is the meaning the term would have to a person of ordinary skill at the time of the invention, in the context of the entire patent including the specification. *See Phillips*, 415 F.3d at 1312–13. "If a petitioner believes that a claim term requires an express construction, the petitioner must include a statement identifying a proposed construction of the particular term and where the intrinsic and/or extrinsic evidence supports that meaning." Consolidated Trial Practice Guide 44 (Nov. 2019).[4]

Petitioner submits that the ordinary and customary meaning applies to the claimed terms and does not propose construction of any particular claim term. *See* Pet. 24. Patent Owner, on the other hand, proposes that the terms "a barrier layer secured to the outer surface or inner surface of each panel"

[4] *Available at* https://www.uspto.gov/TrialPracticeGuideConsolidated.

(claims 1, 20) and "a barrier layer secured to the outer surface of each panel" (claim 12) require construction. Prelim. Resp. 14.

For purposes of this decision, we discern no need to construe any claim term. *See Nidec Motor Corp. v. Zhongshan Broad Ocean Motor Co.*, 868 F.3d 1013, 1017 (Fed. Cir. 2017) (stating that "we need only construe terms 'that are in controversy, and only to the extent necessary to resolve the controversy'") (quoting *Vivid Techs., Inc. v. Am. Sci. & Eng'g, Inc.*, 200 F.3d 795, 803 (Fed. Cir. 1999)).

B. Principles of Law

"In an . . . [*inter partes* review], the petitioner has the burden from the onset to show with particularity why the patent it challenges is unpatentable." *Harmonic Inc. v. Avid Tech., Inc.*, 815 F.3d 1356, 1363 (Fed. Cir. 2016). This burden never shifts to Patent Owner. *Dynamic Drinkware, LLC v. Nat'l Graphics, Inc.*, 800 F.3d 1375, 1378 (Fed. Cir. 2015).

Petitioner's challenges are based on obviousness. Pet. 17.

A claim is unpatentable as obvious under 35 U.S.C. § 103(a) if the differences between the claimed subject matter and the prior art are such that the subject matter, as a whole, would have been obvious at the time the invention was made to a person having ordinary skill in the art to which said subject matter pertains. *KSR Int'l Co. v. Teleflex Inc.*, 550 U.S. 398, 406 (2007). The question of obviousness is resolved on the basis of underlying factual determinations, including: (1) the scope and content of the prior art; (2) any differences between the claimed subject matter and the prior art; (3) the level of skill in the art; and (4) where in evidence, so-called

secondary considerations. *Graham v. John Deere Co. of Kansas City*, 383 U.S. 1, 17–18 (1966).

C. Level of Ordinary Skill in the Art

In determining whether an invention would have been obvious at the time it was made, we consider the level of ordinary skill in the pertinent art at the time of the invention. *Graham*, 383 U.S. at 17.

Factors pertinent to a determination of the level of ordinary skill in the art include: (1) educational level of the inventor; (2) type of problems encountered in the art; (3) prior art solutions to those problems; (4) rapidity with which innovations are made; (5) sophistication of the technology; and (6) educational level of workers active in the field. *Envtl. Designs, Ltd. v. Union Oil Co*., 713 F.2d 693, 696–697 (Fed. Cir. 1983) (citing *Orthopedic Equip. Co. v. All Orthopedic Appliances, Inc.*, 707 F.2d 1376, 1381–82 (Fed. Cir. 1983)). Not all such factors may be present in every case, and one or more of these or other factors may predominate in a particular case. *Id.* Moreover, these factors are not exhaustive but are merely a guide to determining the level of ordinary skill in the art. *Daiichi Sankyo Co. Ltd, Inc. v. Apotex, Inc*., 501 F.3d 1254, 1256 (Fed. Cir. 2007).

In determining a level of ordinary skill, we also may look to the prior art, which may reflect an appropriate skill level. *Okajima v. Bourdeau*, 261 F.3d 1350, 1355 (Fed. Cir. 2001).

Additionally, the Supreme Court informs us that "[a] person of ordinary skill is also a person of ordinary creativity, not an automaton." *KSR*, 550 U.S. at 421.

The parties propose to adopt the same definition that we applied in co-pending IPR2019-00919. *See* Pet. 23–24; *see also* Prelim. Resp. 13. Based on our review of the '197 patent, the types of problems and solutions described in the '197 patent and applied prior art, for purposes of this decision, we agree with the parties and determine that a person having ordinary skill in the art would have had degree in civil engineering or building, material or wood science, or other degree, if such other degree required coursework or experience in the pertinent technology and two years of industry experience or equivalent therein. *See* IPR2019-00919, Paper 9, 14.

D. Prior Art Status

The issue is whether the Petition identifies evidence sufficient to establish that APA (Ex. 1005), StoGuard-2001 (Ex. 1014), and StoGuard-2003 (Ex. 1015) qualify as printed publications for purposes of this review.

As the Board held in a precedential decision, "at the institution stage, the petition must identify, with particularity, evidence sufficient to establish a reasonable likelihood that the reference was publicly accessible before the critical date of the challenged patent and therefore that there is a reasonable likelihood that it qualifies as a printed publication." *Hulu, LLC v. Sound View Innovations, LLC*, IPR2018-01039, Paper 29 at 13 (PTAB Dec. 20, 2019) (precedential) ("*Hulu*").[5]

---

[5] The Decision to Institute in IPR2019-00919, in which many of the references cited in the present case also were at issue, was entered before the Board's precedential decision in *Hulu*. *Compare* IPR2019-00919, Paper 9 (dated Oct. 8, 2019), *with Hulu*, Paper 29 (dated Dec. 20, 2019). Here, we

Patent Owner argues that Petitioner failed to satisfy its burden of proving that the cited art qualify as prior art printed publications, specifically identifying "APA (EX1005)" and "the Sto Corp. documents (EX1014-1015)." *See* Prelim. Resp. 19–20 (citing in-part the Board's precedential decision in *Hulu*, Paper 29).

As to APA (Ex. 1005), we note that it was published by McGraw-Hill, a well-known publisher, and bears a copyright date of 2002. Ex. 1005, 3. Additionally, APA contains Library of Congress catalog publication data, including ISBN information. *Id.* As such, and for purposes of this Decision, we find that Petitioner has identified evidence sufficient to establish a reasonable likelihood that APA was publicly accessible before February 23, 2004, which is the earliest possible critical date of the '197 patent,[6] and therefore qualifies as a printed publication. *See Hulu*, Paper 29 at 19–20 (determining that evidence of a textbook's copyright date, printing date, ISBN number, and publication by an established publisher was sufficient to meet the reasonable likelihood standard for institution); *see also Coriant (USA) Inc. v. Oyster Optics, LLC*, IPR2018-00258, Paper 13 at 11 (PTAB June 6, 2018) ("For established publishers, demonstrating a date of publication is alone sufficient for showing accessibility to the public.").

Turning to StoGuard-2001 (Ex. 1014), this document appears to be a website screenshot of a press release dated October 15, 2001. Ex. 1014, 1;

---

assess the sufficiency of Petitioner's evidence as to whether APA, StoGuard-2001, and StoGuard-2003 qualify as printed publications in view of the guidance provided in *Hulu*. We note that the Petition was filed on February 18, 2020, such that Petitioner also had the benefit of the guidance provided in *Hulu* when filing its Petition.

[6] *See* Ex. 1001, code (60) (identifying earliest application as a provisional filed on February 23, 2004).

see also Pet. 9 (identifying a publication date of 2001). The document also bears a copyright date of 2003. Ex. 1014, 1.

As to StoGuard-2003 (Ex. 1015), this document also appears to be website screenshot of a press release and bears a publication date of March 1, 2003. Ex. 1015, 1; *see also* Pet. 9 (identifying a publication date of 2003). StoGuard-2003 also bears a copyright date of "1998-2009." Ex. 1015, 2.

We find that Petitioner has failed to meet its burden, as set forth in *Hulu*, of establishing a reasonable likelihood that StoGuard-2001 and StoGuard-2003 qualify as prior art printed publications. The Board's precedential decision requires that "the petition must identify, with particularity, evidence sufficient to establish a reasonable likelihood that the reference was publicly accessible before the critical date of the challenged patent." *Hulu*, Paper 29 at 13. The Petition submits that StoGuard-2001 and StoGuard-2003 have publication dates of 2001 and 2003, respectively (Pet. 9), however the totality of the evidence here is insufficient to establish a reasonable likelihood of showing public accessibility. As to StoGuard-2001, the Petition does not reconcile the 2001 publication date with the seemingly inconsistent 2003 copyright date. *See id.* Nor does the Petition reconcile StoGuard-2003's 2003 publication date with the ambiguous "1998-2009" copyright date. *See id.* Additionally, the Petition does not submit any testimony to support a finding that either of these documents is a prior art printed publication. *See id.* Although Dr. Laks testifies that these documents were not considered during examination, his testimony fails to address the public accessibility of these documents. *See* Ex. 1002 ¶¶ 49, 50. Furthermore, nothing in the record indicates that these screenshots were

obtained from websites contemporaneously archived at the alleged time of publication, for example, by the Wayback Machine,[7] which the Federal Circuit and the Board have relied on to validate websites as a source of prior art in proceedings. *See, e.g.*, *In Re Bhagat*, 726 F. App'x 772, 775 (Fed. Cir. 2018) (non-precedential); *see also, e.g.*, *BMW of N. Am. LLC v. Stragent, LLC*, IPR2017-00677, Paper 32 at 45–46 (PTAB June 13, 2018) (Final Written Decision).

For the foregoing reasons, Petitioner has failed to identify with particularity evidence sufficient to establish a reasonable likelihood that either StoGuard-2001 (Ex. 1014) or StoGuard-2003 (Ex. 1015) was publicly accessible before the critical date of the '197 patent.

E. Ground 1 – Unpatentable over APA and Other Cited Art

Petitioner contends that independent claims 1, 12, and 20 are unpatentable over APA in view of StoGuard-2001, StoGuard-2003, Peng, Flack, Van Wagoner, and Elliott.[8] *See* Pet. 25–32, 41–44, 48–50 (addressing independent claims). Petitioner further contends that dependent claims 2–11 and 13–19 are unpatentable over APA in view of various combinations of references. *See id.* at 32–41, 45–48 (addressing dependent claims). Petitioner submits a claim chart in support of these grounds. *See id.* at 25–50.

---

[7] The Wayback Machine is a service provided by the Internet Archive that permits searches of its digital library of archived Internet websites. *See* http://web.archive.org (last visited June 17, 2020).

[8] Petitioner additionally relies on Lionel, Ou, Hoffman, and PS1-95 in its challenge to claim 20. Pet. 19.

1. APA (Ex. 1005)[9]

APA is a published handbook titled "APA Engineered Wood Handbook," published by McGraw-Hill Companies, Inc., in 2002. Ex. 1005, 1, 3. APA has twelve chapters (*id.* at 4–6), including Chapter 2 (Wood Structural Panels), Chapter 4 (Structural Glued Laminated Timber (Glulam)), Chapter 9 (Treatments and Finishes for Wood), and Chapter 12 (Designing and Detailing for Permanence).

2. StoGuard-2001 (Ex. 1014)

StoGuard-2001 (Ex. 1014) appears to be a screenshot of a press release titled, "STO CORP. LAUNCHES STO GUARD HOUSEWRAP ALTERNATIVE," dated February 10, 2001, with a copyright date of 2003. Ex. 1014, 1. For purposes of this Decision, Petitioner has failed to establish that StoGuard-2001 is a prior art printed publication. *Supra* Part II.D.

3. StoGuard-2003 (Ex. 1015)

StoGuard-2003 (Ex. 1015) appears to be a screenshot of a press release titled, "Sto Guard™, a seamless, fluid-applied air and moisture barrier, provides superior protection under most claddings. It does what other wraps only pretend to do." Ex. 1015, 1. StoGuard-2003 is dated 2003, with a copyright date of 1998–2009. *Id.* As with StoGuard-2001, for purposes of this Decision, Petitioner has failed to establish that StoGuard-2003 is a prior art printed publication. *Supra* Part II.D.

---

[9] Our citations to APA are to the exhibit's page numbers rather than the handbook's native page numbers.

4. Van Wagoner (Ex. 1018)

Van Wagoner is a U.S. Patent titled "Thermally Efficient, Protected Membrane Roofing System" and discloses a system for insulating the interior of a building. Ex. 1018, codes (54), (57).

5. Flack (Ex. 1041)

Flack is a U.S. Patent titled "Laminated, Thermal Insulation Panel" and discloses a panel with "a board made of expanded, molded polystyrene, and a membrane laminated on one side of the polystyrene board by means of an adhesive." Ex. 1041, codes (54), (57).

6. Peng (Ex. 1054)

Peng is a U.S. Patent titled "Panelized Wall System Utilizing Joint Tape" and discloses an elastomeric joint tape applied to the seam between building panels in which the walls are then finished with an elastomeric finish. Ex. 1054, codes (54), (57).

7. Petitioner's Challenge

In challenging independent claim 1, Petitioner cites to APA's figures 2.6 and 2.7 to satisfy the claimed "at least two adjacent lignocellulosic panels . . . defining a longitudinal joint between the two panels."[10] *See*

[10] Petitioner's only citation to Elliott is regarding this limitation, contending that "Elliott likewise discloses lignocellulosic material." *See* Pet. 27; *see also id.* at 51 ("Elliott specifically discloses that wood in various forms (such as lumber, plywood, and particle board) is ligno-cellulose material."). We need not further discuss Elliott for purposes of this Decision.

Pet. 25–26 (reproducing APA's Figures 2.6, 2.7). We reproduce APA's Figure 2.7, below:

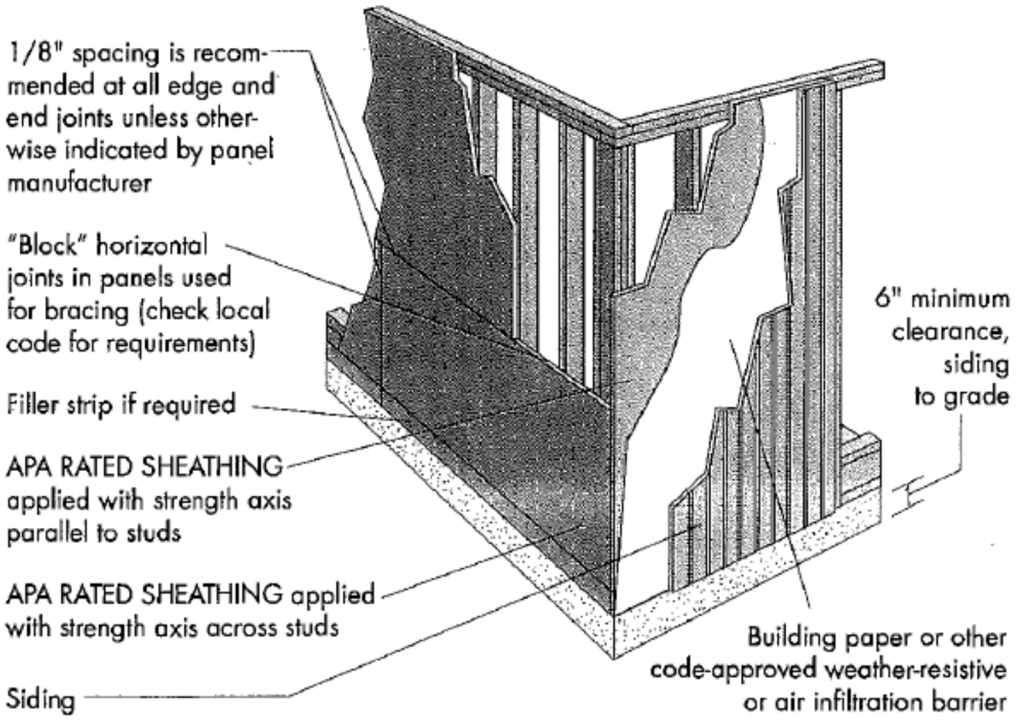

FIGURE 2.7 Wood structural panel wall sheathing.

Ex. 1005, 29. Figure 2.7 depicts sheathing with 1/8" recommended spacing "at all edge and end joints unless otherwise indicated by panel manufacturer." *Id.*

To address the claimed "barrier layer secured to the outer surface of each panel," Petitioner presents three alternative positions.

First, Petitioner submits that APA discloses the claimed barrier, citing to APA's disclosure of water-resistive barriers, including Kraft building paper. *See* Pet. 27–29 (citations omitted). In particular, Petitioner cites to APA's Figure 12.27 and 12.28 and asserts that these figures "show general installation techniques." *Id.* at 28 (citing Ex. 1005, 121). We reproduce APA's Figure 12.27, below:

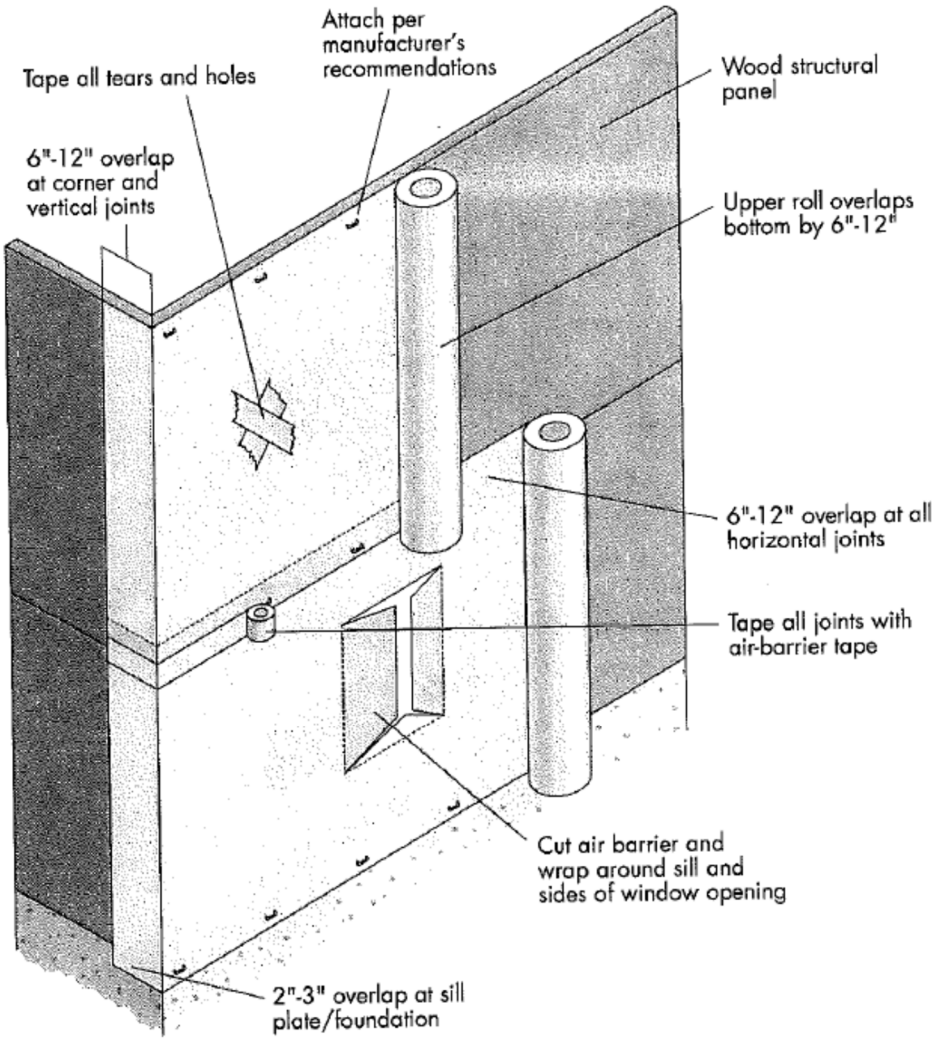

FIGURE 12.27 Proper air barrier installation details (two story wall shown—not to scale).

Ex. 1005, 121. Figure 12.27 depicts two rolls of barrier being wrapped around a building structure. *See id.*

Second, Petitioner asserts that "the StoGuard references [Exs. 1014, 1015] teach a liquid-applied water-resistant coating for panels that is bulk water resistant and water vapor permeable, that can serve as the APA's water-resistant barrier or substitute." Pet. 29; *see also id.* at 29–31 (citing Exs. 1014, 1015).

Third, Petitioner asserts that Flack discloses a water-vapor permeable membrane. Pet. 31 (citations omitted).

To address the claimed "bulk water resistant edge sealant sealing the joint between the proximate edges of the two adjacent panels," Petitioner again cites to APA's Figures 12.27 and 12.28 as "show[ing] 'seam tape' and taping joints with air-barrier tape." *Id.* (citing Ex. 1005, 120–22).

In combining APA with the "StoGuard references" (Exs. 1014, 1015), Petitioner reasons that a skilled artisan would have used the "StoGuard waterproof coating and joint filler, as a form of or substitute for the water-resistive barrier and joint sealants of APA (or the joint sealant of Peng), motivated to improve resistance to water infiltration with cost-effective and functionally effective alternative to housewraps." Pet. 52.

8. Patent Owner's Response

Patent Owner argues that the combination fails to teach the claimed sealant for sealing the joint between adjacent panels. *See* Prelim. Resp. 27–28.

We agree.

9. Analysis

Independent claim 1 recites, "a bulk water resistant edge sealant sealing the joint between the proximate edges of the two adjacent panels." Ex. 1001, 21:61–62. Independent claims 12 and 20 recite similar limitations. *See id.* at 22:42 (claim 12), 23:23–24 (claim 20). Petitioner presents multiple positions under Ground 1 to satisfy this claimed limitation (*see* Pet. 51–53), none of which we find persuasive. We address each of these positions separately, below:

a) APA Discloses Joint Sealant

First, Petitioner submits that APA discloses the claimed joint sealant. *See* Pet. 31 ("APA discloses elastomer sealants and tape for joints.").

We disagree.

Petitioner cites to several different disclosures within APA, but none of them discloses sealing the joint between the proximate edges of two adjacent panels, as required by the claims. *See id.* at 31–32.

First, Petitioner cites to APA's disclosure of caulk. *Id.* at 31 (citing Ex. 1005, 112–13, Figs. 12.48, 12.49, 12.16). The cited disclosure of APA's caulk, however, describes:

> *Caulking*. Elastomeric exterior sealants called caulks are a popular component of the waterproofing system used in modern structures. They are used to seal up the cracks between individual elements of the buildings [sic] exterior finish to keep wind and water from penetrating the skin of the structure. In this respect, the caulking provides a part of the walls' first line of defense against water intrusion. The waterproofing performance of modern structures often depends on many hundreds of feet of caulked joints.

Ex. 1005, 112–14.

APA discloses that this caulk is used as an exterior sealant applied to the exterior finish of a building, in order to serve as the "first line of defense" against water intrusion. *See id.* APA does not disclose that these caulks are applied to seal the joints between adjacent panels of its sheathing panels. Claim 1 requires a "bulk water resistant edge sealant sealing the joint between the proximate edges of the two adjacent panels" (Ex. 1001, 21:61–62) and Petitioner's general citation to APA's caulk for sealing the *cracks on a building's exterior finish* falls short of addressing the claimed limitation.

Second, Petitioner cites to APA's Figure 12.16 (Pet. 31), which we reproduce, below:

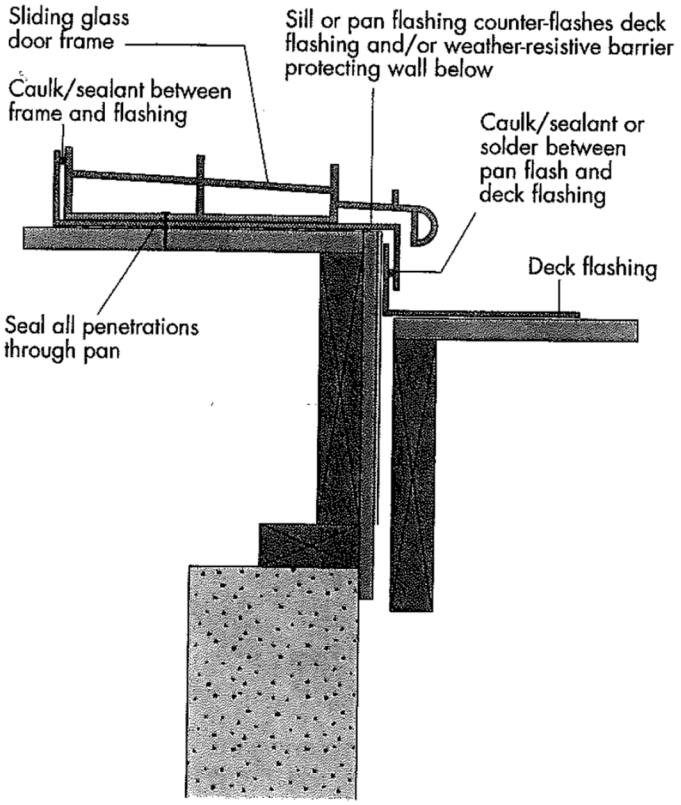

FIGURE 12.16 Sill flashing at sliding glass door.

Ex. 1005, 111. Figure 12.16 depicts sill flashing at a sliding glass door and illustrates caulk or sealant between the frame and flashing. *Id.* Petitioner does not fully explain its position beyond a citation to the figure, and we do not find anything in this figure that depicts caulk used as a sealant between the joint created by two adjacent sheathing panels.

Third, Petitioner cites to APA's Figures 12.27 and 12.28, asserting that these figures depict tape for sealing the claimed joints. Pet. 31 ("Figs 12.27 and 12.28 show 'seam tape' and taping joints with air-barrier tape.").

Regarding Figure 12.27 (reproduced above), the tape that Petitioner relies on is used for sealing the area where different layers of housewrap overlap, not for sealing the joints created by adjacent sheathing panels. *See* Ex. 1005, Fig. 12.27 (depicting tape used to seal an upper roll of house overwrap to a lower roll of house overwrap).

As to Figure 12.28, we reproduce that figure, below:

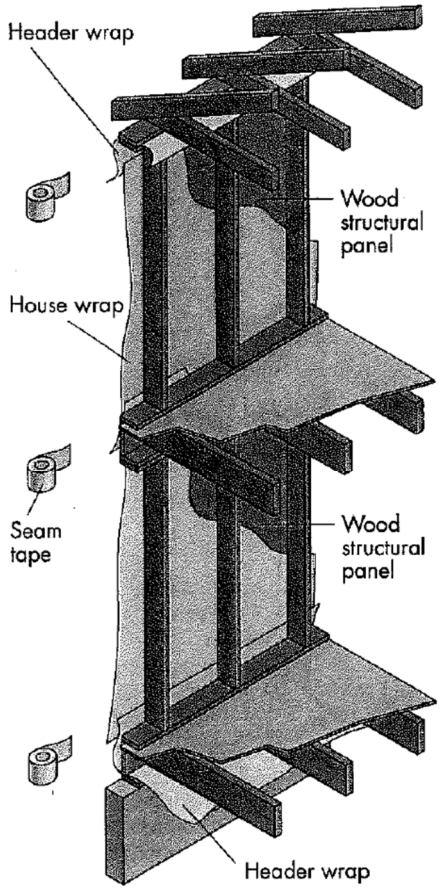

FIGURE 12.28 Air barrier installation details using header wrap.

Ex. 1005, 122. Figure 12.28 depicts "Air barrier installation details using header wrap." *Id.* As can be seen in the above figure, APA's seam tape is used to seal the seams of the header wrap. Petitioner does not fully explain its position beyond a citation to the figure, and we find nothing in this figure

that depicts the joint formed between two adjacent sheathing panels as being sealed by the tape.

Based on the record before us, Petitioner has not established that APA discloses a sealant for sealing the joint between the proximate edges of two adjacent panels, as required by the claims.

b) Obvious to use StoGuard's Coating and Joint Filler

Petitioner also reasons that a skilled artisan would have used "the StoGuard waterproof coating and joint filler, as a form of substitute for the water-resistive barrier and joint sealants of APA . . . , motivated to improve resistance to water infiltration with a cost-effective and functionally effective alternative to housewraps." Pet. 52.

As discussed above, however, Petitioner has failed to establish that either StoGuard-2001 (Ex. 1014) or StoGuard-2003 (Ex. 1015) qualifies as a prior art printed publication. *Supra* Part II.D. As such, we do not consider this alternative challenge based on the StoGuard references.

c) Obvious to use Peng's Caulk or Tape

Petitioner also submits that "Peng also teaches an elastomeric joint/seam sealant (caulk or tape)" (Pet. 32 (citations omitted)) and reasons that

> It would have been obvious to use the StoGuard waterproof coating and joint filler, as a form of or substitute for the water-resistive barrier and joint sealants of APA (*or the joint sealant of Peng*), motivated to improve resistance to water infiltration with a cost-effective and functionally effective alternative to housewraps.

Id. at 52 (emphasis added).

As discussed above, however, we do not consider StoGuard's waterproof coating or joint filler in our analysis. *See supra* Part II.E.9.b. Without the benefit of StoGuard-2001 or StoGuard-2003, we are not persuaded that a skilled artisan would have replaced APA's housewrap with Peng's caulk or tape to improve water resistance. APA's housewrap covers both the panels and the joints. *See, e.g.*, Ex. 1005, Fig. 12.27. Assuming arguendo that Peng teaches a joint sealant, as Petitioner asserts (Pet. 32), we are not persuaded that a skilled artisan would have replaced APA's *housewrap* with Peng's *joint sealant* to improve water resistance, as removal of APA's housewrap would leave APA's panels exposed to water intrusion. In other words, even if Peng's joint sealant seals the joints between adjacent panels, the sealant would not seal the panels themselves, and removing APA's housewrap would leave the panels exposed to water intrusion.

Based on the record before us, Petitioner has not established that APA in view of Peng satisfies the claimed sealant for sealing the joint between the proximate edges of two adjacent panels.

d) Obvious to use Flack's Membrane and Van Wagoner's Seam Tape

Finally, Petitioner asserts that "Flack discloses a panel with a board and a membrane laminated on one side of the board" and that "Van Wagoner discloses sealing seams between panels with a waterproof but vapor permeable tape." Pet. 52 (citations omitted). Petitioner reasons that

> It would have been obvious to use the Flack membrane and the seam tape of Van Wagoner as a form of or substitute for the water-resistive barrier and joint sealants of APA (or the joint sealant of Peng), motivated to improve resistance to water

> infiltration with a cost-effective and functionally effective alternative to housewraps.

Id.

We are not persuaded, as Petitioner's reasoning that the combination would "improve resistance to water resistance" is not supported by the record. "In an . . . [*inter partes* review], the petitioner has the burden from the onset to show with particularity why the patent it challenges is unpatentable." *Harmonic*, 815 F.3d at 1363 (citing 35 U.S.C. § 312(a)(3) (requiring *inter partes* review petitions to identify "with particularity . . . the evidence that supports the grounds for the challenge to each claim")); *see also* 37 C.F.R. § 42.104(b)(5) (requiring petitioners to state "[t]he exhibit number of the supporting evidence relied upon to support the challenge and the relevance of the evidence to the challenge raised, including identifying specific portions of the evidence that support the challenge."). Petitioner cannot satisfy its burden of proving obviousness by employing "mere conclusory statements." *In re Magnum Oil Tools Int'l, Ltd.*, 829 F.3d 1364, 1380 (Fed. Cir. 2016).

In the present case, the Petition cites no declaration testimony and there is no evidence to support a finding that replacing APA's housewraps with Flack's membrane and Van Wagoner's seam tape would either improve resistance to water infiltration or reduce costs. Although Flack discloses a water-resistant membrane, the membrane is applied over a *polystyrene insulation board* (*see, e.g.*, Ex. 1041, code (57)), not a panel of plywood, as disclosed in APA (*see, e.g.*, Ex. 1005, 73 (9.4.4)), and we are not persuaded that applying Flack's membrane would adhere to APA's plywood panels, let alone provide an advantage over the housewraps disclosed in APA. *See* Prelim. Resp. 59 (arguing the same).

10. Summary

For the foregoing reasons, Petitioner has not established a reasonable likelihood of prevailing on its contention that APA in view of StoGuard-2001, StoGuard-2003, Peng, Flack, Van Wagoner, and Elliott renders claim 1 unpatentable. Petitioner's arguments and evidence regarding independent claims 12 and 20 include the same deficiencies discussed above with respect to claim 1. *See* Pet. 74, 75. Further, Petitioner does not contend that the other secondary references relied upon in challenging the dependent claims remedy these deficiencies. *See id.* at 53–60. Accordingly, Petitioner has not established a reasonable likelihood of prevailing on its contentions based on APA that any of claims 1–20 are unpatentable.

F. Ground 2 – Unpatentable over Forbes and Other Cited Art

Petitioner contends that claims 1–20 are unpatentable "based upon Forbes as the primary reference, in various combinations with other references from Ground 1." Pet. 61. In particular, Petitioner relies on Forbes, Van Wagoner, and Flack in addressing independent claims 1, 12, and 20. *See id.* at 63–64, 67. 68. Petitioner further relies on numerous other references in challenging the dependent claims. *See id.* at 63–68. Unlike in Ground 1, Petitioner does not present a claim chart in support of this challenge. *Compare id.* at 25–50, *with id.* at 60–68.

1. Forbes (Ex. 1038)

Forbes is a U.K. patent publication titled, "Insulated, Vapour-Permeable, Liquid-Permeable Panel," and discloses a panel with a first layer

of rigid insulation material and a second layer of vapor permeable, but liquid impermeable, material. Ex. 1038, codes (54), (57).

2. Petitioner's Challenge

Petitioner submits that "Forbes discloses the claimed panel structure with aligned and substantially parallel edges along with a barrier layer." Pet. 63. In support of its challenge, Petitioner submits copies of Forbes's Figures 3 and 4 (*id.* at 61), which we reproduce below:

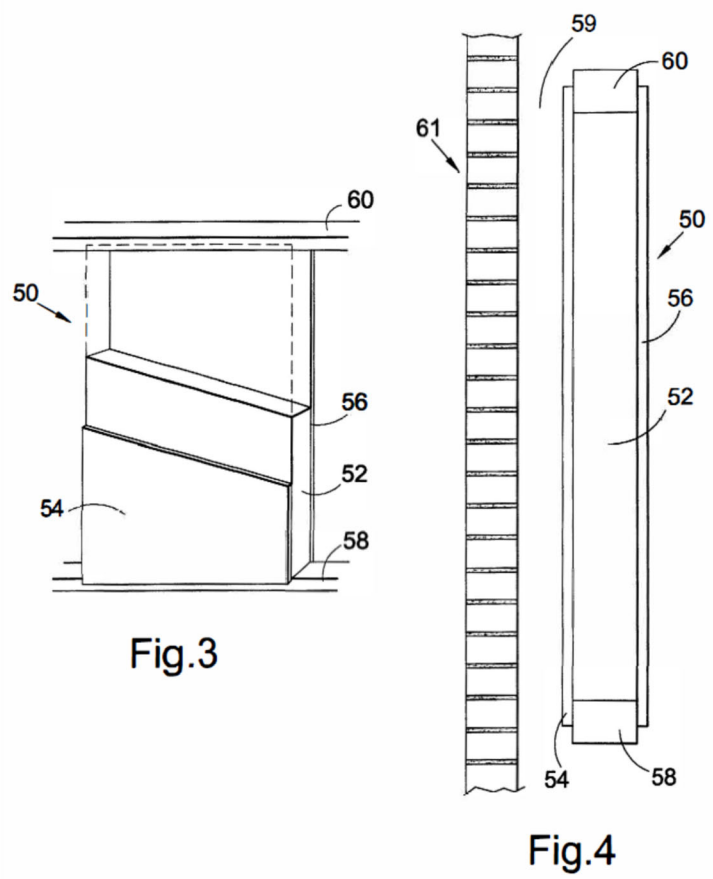

Figures 3 and 4 of Forbes illustrate structural insulated panel 50 with first layer of insulation material 52, "typically expanded polystyrene . . . or other suitable insulation material, and a second layer 54," which is "at least

partially vapour permeable but substantially liquid impermeable." Ex. 1038, 9:7–15.

Petitioner submits that "Forbes discloses a lignocellulosic structural wall panel with a water vapor permeable and liquid impermeable barrier layer." Pet. 60 (citing Ex. 1038, 1). In citing Figures 3 and 4, Petitioner appears to rely on first layer 52 as the claimed panel structure with second layer 54 as the claimed barrier layer. *See id.* at 63 ("Forbes discloses the claimed panel structure aligned and substantially parallel edges along with a barrier layer."); *see also id.* at 62 ("Fig. 3 shows the second layer (54) secured to the panel's outer surface."). Petitioner further submits that the joint between two adjacent panels are "secured by a waterproof adhesive." *Id.* at 61 (citing Ex. 1038, 9–11, 15–18).

As with Ground 1, Petitioner also relies, in the alternative, on the addition of Flack and Van Wagoner to the combination, reasoning that a skilled artisan would have used "the Flack membrane as a form of or substitute for the 'second layer' of Forbes, with the joint tape of Van Wagoner, motivated to improve resistance to water infiltration with a cost-effective and functionally effective alternative to housewraps." *Id.* at 63.

3. Patent Owner's Response

Patent Owner argues that Forbes does not disclose a lignocellulosic panel with a barrier layer (Prelim. Resp. 43) or the bulk water resistant edge sealant (*id.* at 45).

Patent Owner's arguments are persuasive.

4. Analysis

Each of independent claims 1, 12, and 20 recites, "lignocellulosic panels." Ex. 1001, 21:51, 22:29, 23:8. Petitioner submits that "Forbes discloses a lignocellulosic structural wall panel," citing page 1 of Forbes. Pet. 60. Page 1 of Forbes indeed discloses that *prior art systems* disclose plywood or OSB panels, yet these wood or OSB panels are not the "panels" that Petitioner points to in satisfying the claim limitations. Rather, and as explained above, Petitioner relies on Forbes's insulation material 52 to satisfy the claimed adjacent panels, yet Forbes's "panels" are made of insulation material, typically expanded polystyrene. *See* Ex. 1038, 9:7–15. Petitioner does not point to anything in Forbes that discloses that "panels" 52 are made from wood or other lignocellulosic material. Nor does Petitioner contend this would have been obvious. *See* Pet. 63–64. As such, we agree with Patent Owner that Petitioner's challenge is deficient in at least this respect.

We also agree with Patent Owner that this challenge fails to satisfy the claimed sealant or sealing the joint between two adjacent panels, as called for in the claims. *See* Ex. 1001, 21:61–62 (claim 1), 22:22 (claim 12), 23:23–24 (claim 20). Petitioner cites to Forbes for disclosing a sealant for the joint between adjacent panels (Pet. 61), yet we find no such disclosure. The "sealant" that Petitioner appears to refer to is instead an adhesive for affixing second layer 54 to first layer 52. Ex. 1038, 11:12–13 ("A suitable adhesive is PVA Dispersion Glue for Assembly . . . .").

Petitioner also reasons, in the alternative, that a skilled artisan would have used "the Flack membrane as a form of or substitute for the 'second layer' of Forbes, with the joint tape of Van Wagoner, motivated to improve

resistance to water infiltration with a cost-effective and functionally effective alternative to housewraps." Pet. 63. This reasoning, however, falls short for at least two reasons. First, Petitioner proposes that the combination is an "alternative to housewraps," yet Petitioner's challenge does not propose to use a housewrap, as Forbes's "barrier layer" 54 is not a housewrap. Second, and as discussed above, the Petition fails to cite to any evidence, such as testimony or citations to the record, to support a finding that the combination would either improve water resistance or reduce costs. *See supra* Part II.E.9.d. Petitioner does not explain how Forbes's water-resistive barrier and sealants are deficient at resisting water or how substituting Flack's membrane or Van Wagoner's seam tape would have improved Forbes's water resistance or reduce costs such that one of ordinary skill in the art would have been motivated to make this substitution. *See* 37 C.F.R. § 42.104(b)(5).

Although Petitioner also relies on Peng and Elliott in challenging independent claim 1 under Ground 2 (*see* Pet. 19), Petitioner cites to nothing in either of these references that overcomes the deficiencies discussed above (*see id.* at 60–64).

5. Summary

For the foregoing reasons, Petitioner has not established a reasonable likelihood of prevailing on its contention that Forbes in view of Flack or Van Wagoner renders claim 1, 12, or 20 unpatentable. Further, Petitioner does not contend that the other secondary references relied upon in challenging the dependent claims remedy these deficiencies. *See* Pet. 63–68. Accordingly, Petitioner has not established a reasonable likelihood of

prevailing on its contentions based on Forbes that any of claims 1–20 are unpatentable.

G. Ground 3 – Unpatentable over Kenji and Other Cited Art

Petitioner contends that claims 1–20 are unpatentable based on Kenji and the art discussed above in connection with Grounds 1 and 2. *See* Pet. 68. In particular, Petitioner relies on Kenji, Van Wagoner, and Flack in addressing independent claims 1, 12, and 20. *See id.* at 68–71. Petitioner further relies on numerous other references in challenging the dependent claims. *See id.* at 63–68. As with Ground 2, Petitioner does not present a claim chart in support of this challenge. *See id.* at 68–75.

1. Kenji (Ex. 1040 (English Translation of Ex. 1038))

Kenji (Ex. 1040) is an English-language translation of Japanese Patent Publication JP2001020415. Ex. 1040, 1 (Certificate of Translation). Kenji is titled, "Exterior wall panel, joining structure of exterior wall panels and methods for joining exterior wall panels." *Id.* at code (54).

2. Petitioner's Challenge

Petitioner submits that "Kenji discloses the claimed panel structure with aligned and substantially parallel edges along with a barrier layer." Pet. 70. Petitioner further submits that Kenji discloses a "[b]ulk water resistant tape [that] seals joints between panels." *Id.* at 69 (citing Ex. 1040, 5–6, Fig. 4).

In the alternative, and as with Grounds 1 and 2, Petitioner submits that a skilled artisan would have used "the Flack membrane as a form or

substitute for the barrier layer of Kenji, with the joint tape of Van Wagoner, motivated to improve resistance to water infiltration with a cost-effective and functionally effective alternative to housewraps." *Id.* at 71.

3. Patent Owner's Response

Patent Owner argues that the claims require a sealant to seal the joint between the proximate edges of two adjacent panels, and the proposed combination fails to satisfy this structure. *See* Prelim. Resp. 46–53.

We agree.

4. Analysis

The Petition cites to Kenji's Figures 1 and 9 for "show[ing] at least two panels with a face (outer face), back (inner face), and edges between the faces, with adjacent panels aligned such that a joint is formed between the edges of the panels." Pet. 68–69 (citing Ex. 1040, 7). We reproduce Kenji's Figure 1, below:

[Fig. 1]

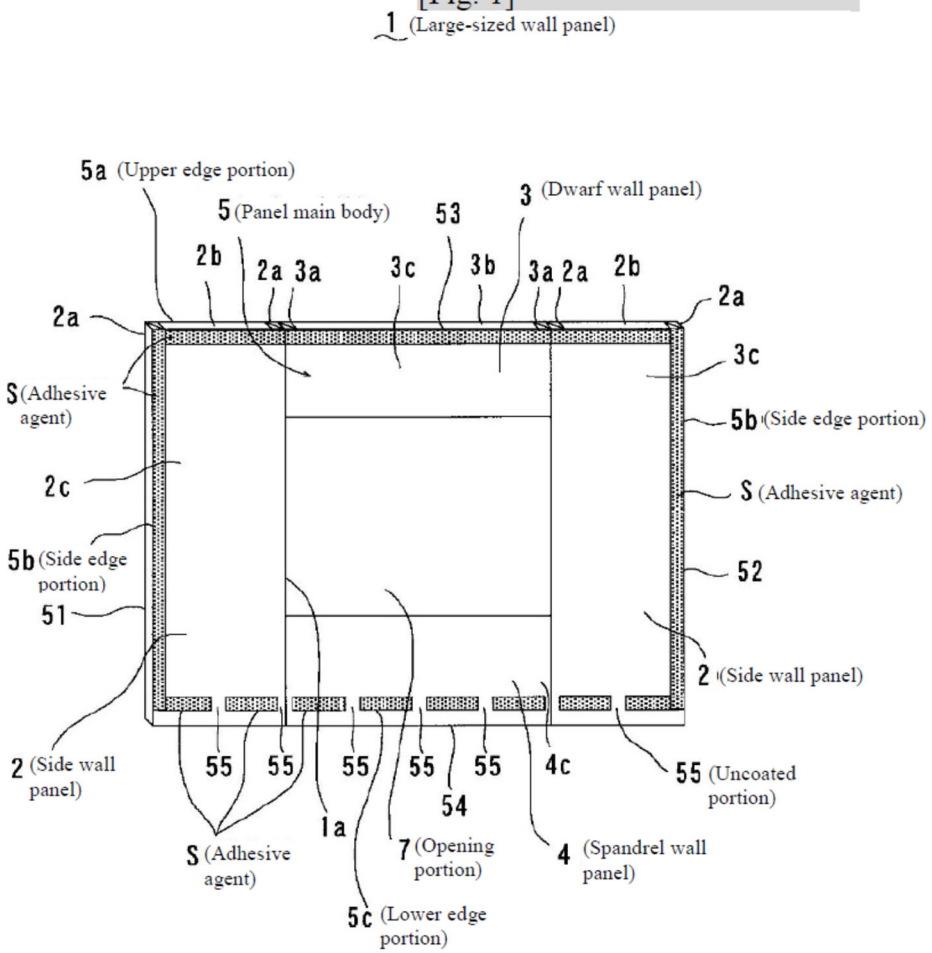

According to Kenji, Figure 1 depicts exterior wall panel 1 with main body 5, waterproof sheet 6, adhesive agent S coated along the peripheries of edge portions 5a, 5b, and 5c. *See* Ex. 1040 ¶ 6. Petitioner relies on Kenji's side wall panel 2, spandrel wall panel 4, and dwarf wall panel 3 as satisfying the claimed "at least two panels." *See* Pet. 68–69.

To address the claimed "edge sealant sealing the joint between the proximate edges of the two adjacent panels," Petitioner submits an annotated version of Kenji's Figure 4 (*id.* at 69–70), which we reproduce, below:

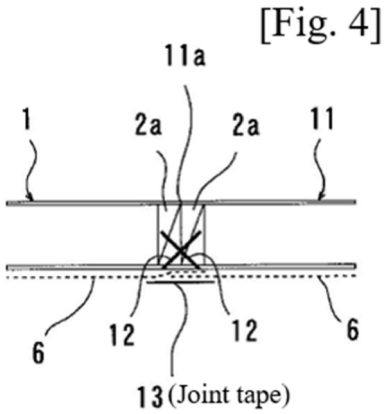

Figure 4 depicts

> joint 11a of the large-sized wall panel 1 and the other wall panel 11 is fixed by screwing the screw nails 12 . . . . into the vertical frame member 2a, and at the seam of the joint 11a, a joint tape 13 having waterproofness is stuck so as to overlap with both water proof sheets 6.

Ex. 1040 ¶ 26.

As shown in Figure 4, joint tape 13 is used to seal the seam of joint 11a, which is *formed by vertical members 2a*. Petitioner does not cite to anything in Kenji that discloses joint tape 13 as being used to seal the joint between side wall panel 2, spandrel wall panel 4, and dwarf wall panel 3, which Petitioner relies on for addressing the claimed at least two adjacent panels. *See* Pet. 68–69. "In an . . . [*inter partes* review], the petitioner has the burden from the onset to show with particularity why the patent it challenges is unpatentable." *Harmonic*, 815 F.3d at 1363; *see also* 37 C.F.R. § 42.104(b)(5).

We are also unpersuaded by Petitioner's alternative position, that a skilled artisan would have used "the Flack membrane as a form of or substitute for the barrier layer of Kenji, with the joint tape of Van Wagoner, motivated to improve resistance to water infiltration with a cost-effective

and functionally effective alternative to housewraps." Pet. 71. This reasoning fails for the same reason as discussed above in connection with Grounds 1 and 2, specifically, the Petition fails to cite to any evidence, such as testimony or citations to the record, to support a finding that the combination would either improve water resistance or reduce costs. *See supra* Part II.E.9.d. We further note that the "joints" formed between Kenji's side wall panel 2, spandrel wall panel 4, and dwarf wall panel 3 are covered by a single waterproof sheet, such as Tyvek, so we do not see any need or desire to cover the "joints" formed between Kenji's underlying panels with seam tape or sealant. *See, e.g.*, Ex. 1040 ¶ 24 ("waterproof sheet 6 is stuck on the panel main body 5 coated with the adhesive agent S. As the waterproof sheet 6, for example, Tyvek"); *see also id.* ¶ 20 ("panel main body 5 in a square shape consisting of two side wall panels 2 and 2, the dwarf wall panel 3 and the spandrel wall panel 4 . . . a waterproof sheet 6 is stuck on one surface of the said panel main body 5."); *see also id.* at Fig. 1 (depicting panel main body 5 as consisting of several smaller panels, including dwarf wall panel 3, spandrel wall panel 4, and two side wall panels 2).

Although Petitioner also relies on Peng and Elliott in challenging independent claim 1 under Ground 3 (*see* Pet. 20), Petitioner cites to nothing in either of these references that overcomes the deficiencies discussed above (*see id.* at 68–71).

5. Summary

For the foregoing reasons, Petitioner has not established a reasonable likelihood of prevailing on its contention that Kenji in view of Flack or Van

Wagoner renders claim 1, 12, or 20 unpatentable. Further, Petitioner does not contend that the other secondary references relied upon in challenging the dependent claims remedy these deficiencies. *See* Pet. 70–75. Accordingly, Petitioner has not established a reasonable likelihood of prevailing on its contentions based on Kenji that any of claims 1–20 are unpatentable.

III. CONCLUSION

After considering the evidence and arguments presented in the Petition and Preliminary Response, we determine that the record does not demonstrate a reasonable likelihood that Petitioner will prevail with respect to any claim challenged in the Petition. We, therefore, do not institute *inter partes* review of the '197 patent.

IV. ORDER

In consideration of the foregoing, it is hereby ORDERED that, no *inter partes* review is instituted.

PETITIONER:

W. Edward Ramage
eramage@bakerdonelson.com

Aaron Chaloner
achaloner@bakerdonelson.com

PATENT OWNER:

Daniel W. McDonald
dmcdonald@merchantgould.com

Jeffrey D. Blake
jblake@merchantgould.com

Paige S. Stradley
pstradley@merchantgould.com

Peter S. Selness
pselness@merchantgould.com