Trials@uspto.gov
571-272-7822

Paper 34
Entered: October 4, 2021

UNITED STATES PATENT AND TRADEMARK OFFICE

BEFORE THE PATENT TRIAL AND APPEAL BOARD

FITBIT LLC,
Petitioner,

v.

PHILIPS NORTH AMERICA LLC,
Patent Owner.

IPR2020-00783[1]
Patent No. 7,088,233 B2

Before STACEY G. WHITE, MICHELLE N. WORMMEESTER, and NORMAN H. BEAMER, *Administrative Patent Judges*.

BEAMER, *Administrative Patent Judge*.

JUDGMENT
Final Written Decision
Determining Some Claims Unpatentable
35 U.S.C. § 318(a)

---

[1] Garmin International, Inc., Garmin USA, Inc., and Garmin Ltd., filed a petition in IPR2020-00910 and have been joined as petitioner in this proceeding.

I. INTRODUCTION

In response to a Petition filed by Fitbit, Inc. ("Petitioner"), now Fitbit LLC, we instituted *inter partes* review of claims 1, 7–10, 13–16, 22, and 24–26 of U.S. Patent No. 7,088,233 B2 ("the '233 patent"). Paper 1 ("Pet."); Paper 12 ("Dec."); Paper 33. Philips North America LLC ("Patent Owner") filed a Response to the Petition, Petitioner filed a Reply, and Patent Owner filed a Sur-Reply. Paper 17 ("PO Resp."); Paper 22 ("Reply"); Paper 24 ("Sur-Reply").

An oral hearing took place on July 29, 2021. The Hearing Transcript ("Tr.") is included in the record as Paper 32. After considering the parties' arguments and supporting evidence, we determine that Petitioner has demonstrated by a preponderance of the evidence that claims 1, 7–10, 13, 15, 16, 22, and 24–26 are unpatentable. Claim 14 has not been proven to be unpatentable.

II. BACKGROUND

A. The '233 Patent

The '233 patent, titled "Personal Medical Device Communication System and Method," was filed on June 7, 2002, issued on August 8, 2006, and recites various continuation-in-part and continuation applications as related. Ex. 1001, codes (54), (22), (45), (63), (60).[2] The patent also states that it is related to "[p]rovisional application No. 60/135,862, filed on May

[2] The '233 patent states that it is a "[c]ontinuation-in-part of application No. 09/956,474, filed on Sep. 19, 2001, which is a continuation of application No. 09/384, 165, filed on Aug. 27, 1999, now Pat. No. 6,356,192, application No. 10/165,624, which is a continuation-in-part of application No. 10/112,669, filed on Mar. 28, 2002, and a continuation-in-part of application No. PCT/US01/18734, filed on Jun. 8, 2001." *Id.* at code (63).

25, 1999, provisional application No. 60/105,493, filed on Oct. 23, 1998, and provisional application No. 60/279,401, filed on Mar. 28, 2001." *Id.* at code (60); *see* Exs. 1013–1015.

Petitioner assumes for purposes of its challenge that the earliest effective filing date for all but claims 13, 24, and 25 of the '233 patent is the October 23, 1998, filing date of application No. 60/105,493. Pet. 3. For claims 24 and 25, Petitioner argues that the earliest effective filing date is the May 25, 1999, filing date of application No. 60/135,862. *Id.* at 3, 19–20 (*citing* Ex. 1002 ¶¶ 45–46). For claim 13, Petitioner argues that the earliest effective filing date is the March 28, 2001, filing date of application No. 60/279,401. *Id.* at 3–4, 20 (*citing* Paradiso Decl. ¶¶ 45, 47). Patent Owner does not contest these assertions for purposes of this proceeding. PO Resp. 6–7. This Decision adopts Petitioner's unopposed positions on priority dates.

The '233 patent describes a "personal and/or institutional health and wellness communications system, which may be used for a variety of emergency and non-emergency situations using two-way communication devices and a bi-directional communication network." *Id.* at code (57). Figure 5 of the '233 patent is reproduced below.

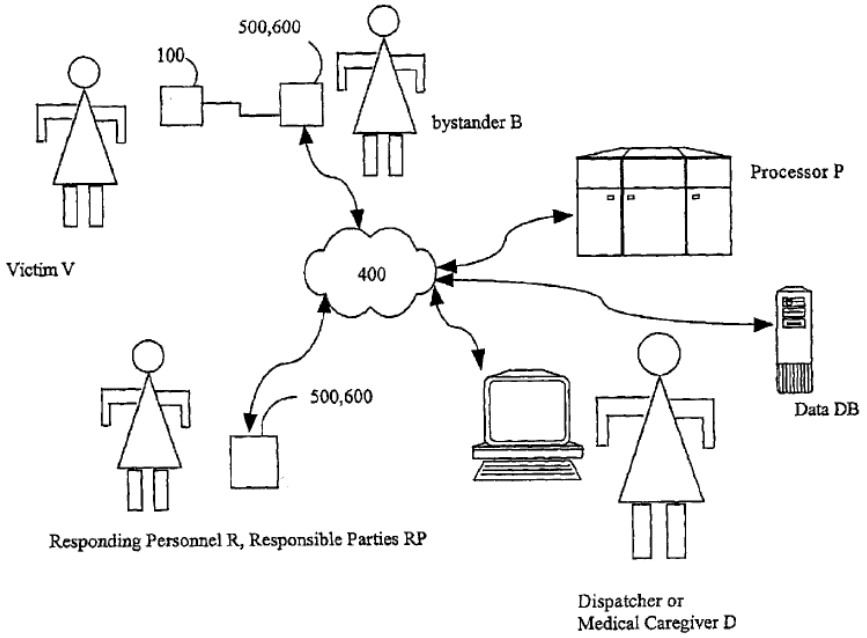

FIG. 5

Figure 5 is a network diagram showing communications with various system components. *Id.* at 2:47–48. Figure 5 shows Personal Medical Device 100, which may be implanted, or carried on the person, of Victim V. *Id.* at 11:49–50. For example, Personal Medical Device 100 could be a pacemaker. As another example, Personal Medical Device 100 could have one or more sensor inputs connected to external or embedded "detectors 140" (not shown on Figure 5) that:

> may be any sensor of bodily or physiological parameters such as, but not limited to: temperature, motion, respiration, blood oxygen content, electrocardiogram (ECG), electroencephalogram (EEG), and other measurements.

Id. at 3:27–33.

Figure 5 shows that Personal Medical Device 100 may communicate with Medical Device Interface 600 (elsewhere numbered "200"), which in

turn can communicate via network 400 with other agents or devices that would be involved in addressing the medical problem or emergency involving Victim V. *Id.* at Fig. 5, 3:12–15. One such device is a central communications base station which in turn can communicate with personal medical devices or a central monitoring station that can initiate emergency dispatch services, for example. *Id.* at Fig. 1, 8:40–63, 10:14–17.

The ’233 patent discloses that Personal Medical Device 100 includes a power module, such as a battery, a memory, and a processor, and may include connections to the above-mentioned sensors, a user interface module with a display and other user input/output devices, and a short range wireless communications module. *Id.* at Figs. 2, 3, 3:18–33, 3:50–4:10. Personal Medical Device 100 can also include a GPS (Global Positioning System) receiver to enable determining the location of the victim. *Id.* at 12:63–13:8. In addition, Personal Medical Device 100 can include power management circuitry to save battery life by powering off the communications module when not needed. *Id.* at 14:15–60.

The short range wireless communications module of Personal Medical Device 10 can communicate with Medical Device Interface 600 and the central communications base station, which also may include short range wireless communications modules. *Id.* at Fig. 4A, 4:14–21, 7:55–57, 8:41–46. One mode of short range wireless communication uses the Bluetooth standard. *Id.* at 4:49–60. The ’233 patent “impos[es]” a “meaning” on the phrase “short range wireless networks” “to include premises and facility based wireless networks and not to describe long-range networks such as cellular telephone networks used to communicate over long-distances.” *Id.* at 5:61–65.

The ’233 patent further provides for security arrangements to restrict the exchange of information to authorized agents. *Id.* at 13:24–14:14. Exemplary arrangements include the use of passwords, and various encryption techniques such as security keys and public/private key exchange. *Id.* at 8:12–15, 13:43–65.

In sum, the ’233 patent states that a purpose of providing communications between the personal medical device and other agents or devices is:

> to provide health care professionals with access to information for remote diagnostic capabilities; to provide notification of acute conditions possibly requiring immediate assistance, transportation to a medical center, or remote treatment action; to provide a location information of mobile persons for caregivers; to notify responsible parties of the occurrence of a medical condition; and to provide remote intervention assistance by caregivers through verbal or visual interaction.

Id. at 2:11–22.

B. Illustrative Claim

Independent claim 1 of the ’233 patent is the only challenged independent claim and is illustrative of the challenged claims, and is reproduced below.

> 1. A bi-directional wireless communication system comprising:
>
> (a) a first personal device, the first personal device further comprising:
>
> (i) a processor;
>
> (ii) a memory;
>
> (iii) a power supply;
>
> (iv) at least one detector input; and

(v) a short-range bi-directional wireless communications module;

(b) a second device communicating with the first device, the second device having a short-range bi-directional wireless communications module compatible with the short-range bi-directional wireless communications module of the first device; and

(c) a security mechanism governing information transmitted between the first personal device and the second device.

Ex. 1001, 14:62–15:12. Comparing claim 1 to Figure 5 of the '233 patent and its accompanying description, we understand Personal Medical Device 100 to be an example of the claimed first personal device, and Medical Device Interface 600 to be an example of the claimed second device.

C. References

Petitioner relies on the following references (Pet. 2–3):

- Jacobsen et al., U.S. Patent No. 6,198,394. Exhibit 1005 ("Jacobsen").
- Say et al., U.S. Patent No. 6,175,752. Exhibit 1006 ("Say").
- Quy, U.S. Patent No. 6,602,191. Exhibit 1007 ("Quy").
- Geva, U.S. Patent No. 6,366,871. Exhibit 1008 ("Geva").
- Reber et al., U.S. Patent No. 5,961,451. Exhibit 1020 ("Reber").
- Gabai et al., U.S. Patent No. 6,160,986. Exhibit 1040 ("Gabai").

Petitioner also relies on the declaration of Dr. Joseph Paradiso. Ex. 1002 ("Paradiso Decl.").

Patent Owner relies on the declaration of Dr. Thomas L. Martin. Ex. 2026 ("Martin Decl.").

D. Asserted Grounds of Unpatentability

Petitioner challenges the patentability of claims 1, 7–10, 13–16, 22, and 24–26 of the '233 patent on the following grounds (Pet. 2–3)[3]:

Claims Challenged	35 U.S.C. §	References
1, 7–10, 14	102	Jacobsen
1, 7–10, 14	103(a)	Say
1, 7–10, 14	103(a)	Jacobsen, Say
13	103(a)	Jacobsen, Say, Quy
24, 25	103(a)	Jacobsen, Say, Geva
26	103(a)	Jacobsen, Say, Reber
15, 16, 22	103(a)	Say, Gabai

E. Real Parties in Interest

Petitioner identifies Fitbit LLC as the real party in interest. Paper 33. Petitioner states that Fitbit LLC is a subsidiary of Google LLC, which is a subsidiary of XXVI Holdings Inc., which is a subsidiary of Alphabet Inc. *Id.* Patent Owner identifies itself as the real party in interest. Paper 5, 1.

F. Related Proceedings

The parties identify the *Philips North America LLC v. Fitbit, Inc.,* No. 1:19-cv-11586 (D. Mass.) ("the *Fitbit* case") and *Philips North America LLC v. Garmin International, Inc. et al.,* Case No. 2:19-cv-06301-AB-KS,

[3] The Leahy-Smith America Invents Act ("AIA") included revisions to 35 U.S.C. §§ 102 and 103 that became effective after the filing of the application for the '233 patent. Therefore, we apply the pre-AIA versions of these sections.

(C.D. Cal.) ("the *Garmin* case") as related proceedings. Pet. 1; Paper 5, 1. Both patent litigations involve the '233 patent. *Id.*

III. ANALYSIS

A. Legal Standards

"A claim is anticipated only if each and every element as set forth in the claim is found, either expressly or inherently described, in a single prior art reference." *Verdegaal Bros., Inc. v. Union Oil Co. of Cal.*, 814 F.2d 628, 631 (Fed. Cir. 1987). "The identical invention must be shown in as complete detail as is contained in the . . . claim." *Richardson v. Suzuki Motor Co.*, 868 F.2d 1226, 1236 (Fed. Cir. 1989). "These elements must be arranged as in the claim under review, but this is not an 'ipsissimis verbis' test." *In re Bond*, 910 F.2d 831, 832 (Fed. Cir. 1990) (citations omitted).

> If the prior art reference does not expressly set forth a particular element of the claim, that reference still may anticipate if that element is "inherent" in its disclosure. . . . "Inherency, however, may not be established by probabilities or possibilities. The mere fact that a certain thing may result from a given set of circumstances is not sufficient."

In re Robertson, 169 F.3d 743, 745 (Fed. Cir. 1999) (citations omitted). Inherency requires that "the allegedly inherent characteristic *necessarily* flows from the teachings of the applied prior art." *Ex parte Levy*, 17 USPQ2d 1461, 1464 (BPAI 1990) (emphasis in original).

A claim is unpatentable for obviousness if, to one of ordinary skill in the pertinent art, "the differences between the subject matter sought to be patented and the prior art are such that the subject matter as a whole would have been obvious at the time the invention was made." *KSR Int'l Co. v. Teleflex Inc.*, 550 U.S. 398, 406 (2007) (quoting 35 U.S.C. § 103(a)). The

question of obviousness is resolved on the basis of underlying factual determinations, including "the scope and content of the prior art"; "differences between the prior art and the claims at issue"; and "the level of ordinary skill in the pertinent art." *Graham v. John Deere Co.*, 383 U.S. 1, 17–18 (1966). Additionally, secondary considerations, such as "commercial success, long felt but unsolved needs, failure of others, etc., might be utilized to give light to the circumstances surrounding the origin of the subject matter sought to be patented. As indicia of obviousness or nonobviousness, these inquiries may have relevancy." *Graham*, 383 U.S. at 17–18.

A patent claim "is not proved obvious merely by demonstrating that each of its elements was, independently, known in the prior art." *KSR*, 550 U.S. at 418. Rather, an obviousness determination requires finding "both 'that a skilled artisan would have been motivated to combine the teachings of the prior art references to achieve the claimed invention, and that the skilled artisan would have had a reasonable expectation of success in doing so.'" *Intelligent Bio-Sys., Inc. v. Illumina Cambridge Ltd.*, 821 F.3d 1359, 1367–68 (Fed. Cir. 2016) (citation omitted); *see KSR*, 550 U.S. at 418 (for an obviousness analysis, "it can be important to identify a reason that would have prompted a person of ordinary skill in the relevant field to combine the elements [in the way the claimed] new invention does"). "Although the *KSR* test is flexible, the Board 'must still be careful not to allow hindsight reconstruction of references . . . without any explanation as to *how* or *why* the references would be combined to produce the claimed invention.'" *TriVascular, Inc. v. Samuels*, 812 F.3d 1056, 1066 (Fed. Cir. 2016) (citation omitted).

Further, an assertion of obviousness "cannot be sustained by mere conclusory statements; instead, there must be some articulated reasoning with some rational underpinning to support the legal conclusion of obviousness." *KSR*, 550 U.S. at 418 (quoting *In re Kahn*, 441 F.3d 977, 988 (Fed. Cir. 2006)); *accord In re NuVasive, Inc.*, 842 F.3d 1376, 1383 (Fed. Cir. 2016) (stating that "'conclusory statements'" amount to an "insufficient articulation[] of motivation to combine"; "instead, the finding must be supported by a 'reasoned explanation'" (citation omitted)); *In re Magnum Oil Tools Int'l, Ltd.*, 829 F.3d 1364, 1380 (Fed. Cir. 2016) ("To satisfy its burden of proving obviousness, a petitioner cannot employ mere conclusory statements. The petitioner must instead articulate specific reasoning, based on evidence of record, to support the legal conclusion of obviousness.").

The motivation to combine must be "accompanied by a reasonable expectation of achieving what is claimed in the patent-at-issue." *Intelligent Bio-Sys, Inc. v. Illumina Cambridge Ltd.*, 821 F.3d 1359, 1367 (Fed. Cir. 2016). "The reasonable expectation of success requirement refers to the likelihood of success in combining references to meet the limitations of the claimed invention." *Id*.

B. Level of Ordinary Skill in the Art

Petitioner relies on its expert to contend:

> At the time of the alleged inventions a person of ordinary skill in the art ("POSITA") would have had at least a B.S. in computer science, electrical engineering, or an equivalent, and at least two years of experience in the relevant field, i.e., wireless communications. More education can substitute for practical experience and *vice versa*.

Pet. 5; Paradiso Decl. ¶ 15.

Patent Owner relies on its expert's testimony in the *Fitbit* case:

> [A] person of ordinary skill in the art of the patented inventions as of the earliest claimed priority date on the face of each patent, is an individual with a.) at least a bachelor's degree in electrical engineering, computer engineering, or computer science and b.) some experience with activity and/or health monitoring technologies, or the equivalent thereof . . . [and] would also have experience with security in the context of wireless communications.

PO Resp. 14 (*citing* Ex. 2007 ¶ 11; Martin Decl. ¶¶ 20–21).

Although the respective positions are very similar and our analysis would be the same under either Patent Owner's or Petitioner's definition of the ordinarily skilled artisan, from our review of the record, we find Patent Owner's more specific articulation of the relevant experience is appropriate and consistent with the disclosure of the '233 patent and the prior art of record. *See Okajima v. Bourdeau*, 261 F.3d 1350, 1355 (Fed. Cir. 2001); *In re GPAC Inc.*, 57 F.3d 1573, 1579 (Fed. Cir. 1995). Thus, we adopt Patent Owner's description.

C. Claim Construction

The Petition was accorded a filing date of April 8, 2020. Paper 3, 1. In an *inter partes* review for a petition filed on or after November 13, 2018, a claim "shall be construed using the same claim construction standard that would be used to construe the claim in a civil action under 35 U.S.C. 282(b)." 37 C.F.R. § 42.100(b) (2019). We apply the claim construction standard from *Phillips v. AWH Corp.*, 415 F.3d 1303, 1312–13 (Fed. Cir. 2005) (*en banc*).

Under that standard, claim terms are generally given their ordinary and customary meaning, as would be understood by one with ordinary skill in the art in the context of the specification, the prosecution history, other

claims, and even extrinsic evidence including expert and inventor testimony, dictionaries and learned treatises, although extrinsic evidence is less significant than the intrinsic record. *Phillips*, 415 F.3d at 1312–17. Usually, the specification is dispositive, and it is the single best guide to the meaning of a disputed term. *Id.* at 1315.

"Importantly, the person of ordinary skill in the art is deemed to read the claim term not only in the context of the particular claim in which the disputed term appears, but in the context of the entire patent, including the specification." *Id.* at 1313. "In determining the meaning of the disputed claim limitation, we look principally to the intrinsic evidence of record, examining the claim language itself, the written description, and the prosecution history, if in evidence." *DePuy Spine, Inc. v. Medtronic Sofamor Danek, Inc.*, 469 F.3d 1005, 1014 (Fed. Cir. 2006) (*citing Phillips*, 415 F.3d at 1312–17). However, in construing the claims, care should be taken to avoid improperly importing a limitation from the specification into the claims. *See Cont'l Circuits LLC v. Intel Corp.*, 915 F.3d 788, 797–98 (Fed. Cir. 2019) ("[U]se of the phrase 'present invention' or 'this invention' is not always . . . limiting, such as where . . . other portions of the intrinsic evidence do not support applying the limitation to the entire patent." (citations omitted)). An inventor may provide a meaning for a term that is different from its ordinary meaning by defining the term in the specification with reasonable clarity, deliberateness, and precision. *In re Paulsen*, 30 F.3d 1475, 1480 (Fed. Cir. 1994).

Claim terms need only be construed to the extent necessary to resolve the controversy. *Nidec Motor Corp. v. Zhongshan Broad Ocean Motor Co.*, 868 F.3d 1013, 1017 (Fed. Cir. 2017).[4]

1. security mechanism governing information transmitted between the first personal device and the second device

Claim 1 requires "a security mechanism governing information transmitted between the first personal device and the second device." Ex. 1001, 15:10–12. Consistent with our Decision to Institute, in which we declined to construe this requirement, neither party proposes a construction beyond its plain meaning. Dec. 15; Pet. 20–21; Reply 1; Sur-Reply 2; Martin Decl. ¶ 39. We note that the courts in the *Fitbit* and *Garmin* cases also held that this requirement did not require construction and would be given its plain and ordinary meaning in those proceedings. Ex. 1081, 26; Ex. 2023, 15.

Nonetheless, as elaborated in Sections III.D.2 and III.E.2 below, in considering whether the references relied on to anticipate or render obvious the challenged claims, the parties interpret the plain language of this claim requirement differently. As described above, the '233 patent provides for security arrangements to restrict the exchange of information to authorized agents, including the use of passwords, and/or various encryption techniques such as security keys and public/private key exchange. Ex. 1001, 8:11–22,

[4] In the context of claim construction, Patent Owner refers to our construction of "wireless communication" set forth in the Decision to Institute (Dec. 13), and discusses the claims 24 and 25 requirement of a "location determination module." PO Resp. 12–14. Neither party raises any actual issues that require us to construe these terms in this Decision, and therefore we do not revisit construction of "wireless communication," or consider that of "location determination module."

13:24–14:14. Also, claims 2–5 of the ’233 patent variously require encryption, “authorization” (*e.g.*, passwords), keys, and the like as the security mechanisms of claim 1. *Id.* at 15:13–21. Petitioner relies on these disclosures to maintain that the use of encryption or passwords are examples of security mechanisms governing transmission of information between devices in accord with the claims. Pet. 37, 59–60; Reply 1–2.

Patent Owner argues that Petitioner, in the guise of applying the plain meaning of this claim requirement, “effectively render[s] the term [*i.e.,* ‘security’] completely meaningless.” PO Resp. 8. Patent owner emphasizes that the required security mechanism is not any type of security mechanism, but rather one which *governs transmitted information*, and, based on that language, variously asserts: that the security mechanism “establish[es] authorization for a user of a device to access certain types of data over a preexisting channel”; that “not all of the forms of ‘security’ generally described in the specification would govern information transmitted between a first device and a second device”; that encryption “may protect information, but it does not govern or control its transmission”; that “encryption of the contents of the signal and using it to govern access by a particular device is different from encryption of signals on an established network”; that the system provides “‘**multiple levels** of prioritization, **authentication of a person (task, step, process or order)**, and **confirmation** via interrogation of person, device, or related monitor’”; that “security is required for **authorizing a person’s access to device 100 over the network** — not simply authentication of **devices** across a network”; that information must be governed not by disabling devices or preventing the transmission of information, but rather by applying a security mechanism

that authorizes access **to** information transmitted between the devices"; that "the governing of information transmitted relates to the ability of one networked device over another to have access or authorization to information"; that "simply providing access to a device does not govern information transmitted between two devices"; that "device-to-device encryption focused on establishing secure communications links . . . has no security mechanism to govern information transmitted"; and that encryption of information in "one direction" does not disclose "use of encryption over information transmitted between the claimed first device and second-device over a bidirectional communications channel." PO Resp. 8, 10, 11, 19, 20, 21, 23, 27, 39, 40.

Patent Owner's elaboration on the plain meaning of "security mechanism governing information transmitted between the first personal device and the second device" relies heavily on Figure 5 of the '233 patent, which refers to different levels of access to communications between the victim and a bystander *versus* a dispatcher, and states that the bystander "should not be allowed [a higher] level of access, even though the bystander B's personal wireless device 600 may be acting as an intermediary in communication from the personal device 100 to the dispatcher D." PO Resp. 3, 10, 20, 28; Ex. 1001, Fig. 5, 13:30–41. In particular, Patent Owner argues that some types of encryption of transmitted information are not suitable to provide such different access, compared to security mechanisms that provide "a certain level of access or authorization to information transmitted." PO Resp. 10–11. On the other hand, Patent Owner states that "neither Patent Owner nor [its expert] have advocated for

a construction of the term that requires multiple levels of authorization." Sur-Reply 10.

As discussed further below, Petitioner challenges Patent Owner's various assertions concerning the plain meaning of "security mechanism governing information transmitted," including Patent Owner's distinguishing "'encryption of the contents of the signal' from 'encryption of signals,'" and Patent Owner's reliance on Figure 5 of the '233 patent, arguing that Patent Owner is improperly attempting to limit the scope of the claims to exemplary embodiments. *E.g.*, Reply 4.

As elaborated in our discussion below of Petitioner's anticipation and obviousness challenges, we are not persuaded by Patent Owner's arguments based on its characterizations of the plain meaning of "security mechanism governing information transmitted between the first personal device and the second device." The '233 patent explicitly discloses that the use of passwords or encryption can be used to secure information transmitted between devices. Ex. 1001, 8:12–22, 13:25–67. The use of passwords or security keys certainly provides a form of "governing" of information transmitted between devices. We note that the courts in the *Fitbit* and *Garmin* cases have concluded likewise:

> [Patent Owner's expert] provides minimal explanation for — and cites to no evidence in support of — his opinion that encryption 'does not govern or control [the] transmission [of information]' . . . [and] that opinion appears to conflict with the specification and claims.

Ex. 1081, 25.

> [Patent Owner's expert's] conclusory opinion should not be afforded any weight.

Ex. 2023, 14.

We conclude that it is unnecessary to provide an explicit construction of the phrase at issue, and do not agree with Patent Owner that techniques such as the use of passwords or encryption fall outside of the scope of claim 1.

2. means for signaling the bi-directional communications module to transition from the powered-down state to the powered-up state

Claim 26 of the '233 patent requires "a means for signaling the bi-directional communications module to transition from the powered-down state to the powered-up state." Ex. 1001, 16:18–20. Petitioner proposes to construe this portion of the claim pursuant to 35 U.S.C. § 112 ¶ 6, including specifying the disclosed structure corresponding to the recited function as "components capable of providing a magnetic, mechanical, sound or ultrasound, infrared, or radio frequency signal, and structural equivalents thereof." Pet. 21 (*citing* Ex. 1001, 14:15–60, 16:16–30; Paradiso Decl. ¶¶ 49–50). Petitioner, however, also states that "[t]he '233 patent explains that the 'means for signaling' can be 'a mechanical signal, such as throwing a switch or applying pressure to a pad.'" Pet. 83; *see* Ex. 1001, 14:35–36. Therefore, we are not persuaded that Petitioner's proposed articulation of the corresponding structure is correct.

In our Decision to Institute, we stated that it is sufficient for present purposes to note that the disclosed structure that performs the function recited in claim 26 includes a switch that turns the bi-directional communications module on and off. Dec. 12. Patent Owner agrees that such structure is encompassed by the "means for signaling. . ." of claim 26. PO Resp. 12. We reiterate for purposes of this Decision that it is sufficient to note that the disclosed structure includes a switch as described.

3. data input/output port

Claim 1 requires the first personal device and the second device to each have a "short-range bi-directional wireless communications module." Ex. 1001, 15:3–9. Claim 14 depends from claim 1, and additionally requires:

> [T]he first personal device further comprises a data input/output port, the second device further comprises a data input/output port, and wherein the second device communicates with the first personal device using the data input/output ports.

Id. at 15:42–46.

In our Decision to Institute (Dec. 38–39), we noted that the '233 patent explicitly differentiates between local area wireless communication and communication via data ports, as illustrated in Figures 4A and 4C, and further explained in the specification as follows:

> Optionally, [the personal medical device] has connections to data input/output ports 160. Data I/O ports 160 may include, but are not limited to: serial, parallel, USB, etc.
>
> . . . .
>
> Optionally, [the personal medical device] includes a wireless communications module . . . . In one embodiment the wireless communications module includes systems and standards for Local Area Wireless 330.
>
> . . . .
>
> FIG. 4A depicts one embodiment of the present system. [The personal medical device] communicates to Personal Wireless Device (PWD) 500 with local area wireless (LAW) 330.
>
> . . . .
>
> FIG. 4C depicts another embodiment of the present system. [The personal medical device] communicates through data port 160 to Medical Device Interface (MDI) 600.

Ex. 1001, Figs. 4A, 4C, 3:47–49, 3:54–57, 4:14–16, 4:25–27.

The ’233 patent further discloses that the LAW 330 described above includes the claimed short-range bi-directional wireless communications module, and explains that this term is meant to “include premises and facility based wireless networks.” Ex. 1001, 5:57–65. Even though wireless communications modules necessarily have inputs and outputs, we preliminarily concluded, based on these disclosures, that the data input/output ports of claim 14 had to be separate from the “short-range bi-directional wireless communications module” of claim 1 — otherwise the requirement of data input/output ports in claim 14 would be superfluous. Dec. 38–39. *See Mformation Techs., Inc. v. Research in Motion Ltd.*, 764 F.3d 1392, 1399 (Fed. Cir. 2014) (favoring a construction that does not render another limitation “superfluous”).

Petitioner points out that there is no example disclosed in the ’233 patent that embodies claim 14 — *i.e.*, no example in which two devices communicate with each other, both using a local area wireless LAW 330 module and a Data I/O port 160. Reply 7. Therefore, argues Petitioner, claim 14 should not be construed to cover subject matter not disclosed in the ’233 patent. Reply 9. However, as both Petitioner and Patent Owner point out, the ’233 patent discloses that both the personal medical device PMD 100 shown in Figure 2 and the medical device interface MDI 600 shown in Figure 4C can include both a wireless communication module 300 and data I/O ports 160, which provides support for claim 14, notwithstanding that the specific connections of components required by claim 14 are not explicitly illustrated. Reply 7–8; Sur-Reply 10–11; Ex. 1001, Fig. 2, 3:47–49, 54–55.

Moreover, Petitioner admits that the example of Figure 3A, which uses wireless communication modules 300, “*does not* include a data I/O port

like claim 14." Reply 8 (emphasis added). This admission contradicts Petitioner's argument that "wireless communications module" and "data input/output port" are two terms that refer to the same structure. Reply 9 (citing *Applied Med. Res. Corp. v. U.S. Surgical Corp.*, 448 F.3d 1324, 1333 n.3 (Fed. Cir. 2006) ("[T]he use of two terms in a claim requires that they connote different *meanings*, not that they necessarily refer to two different *structures*")).

Accordingly, we maintain our preliminary conclusion as expressed in the Institution Decision that the data input/output ports of claim 14 are separate from the "short-range bi-directional wireless communications module[s]" of claim 1.

D. Ground 1: Anticipation of Claims 1, 7–10, and 14 by Jacobsen

Petitioner challenges claims 1, 7–10, and 14 as anticipated under pre-AIA 35 U.S.C. § 102 by Jacobsen. Pet. 22–44.

1. Jacobsen

Jacobsen, titled "System For Remote Monitoring Of Personnel," was filed December 5, 1996, and issued March 6, 2001. Ex. 1005, codes (54), (22), (45). Because Jacobsen was filed before the presumed earliest possible priority date for any challenged claim of the '233 patent (October 23, 1998), we consider this reference to be prior art under pre-AIA 35 U.S.C. § 102(e).

Jacobsen discloses a system for remotely monitoring personnel status of, for example, a soldier, including sensors disposed on the soldier that determine physiological status, and which can communicate with a "soldier unit" that processes information from the sensor. Ex. 1005, Abstr. Figure 1 is reproduced below.

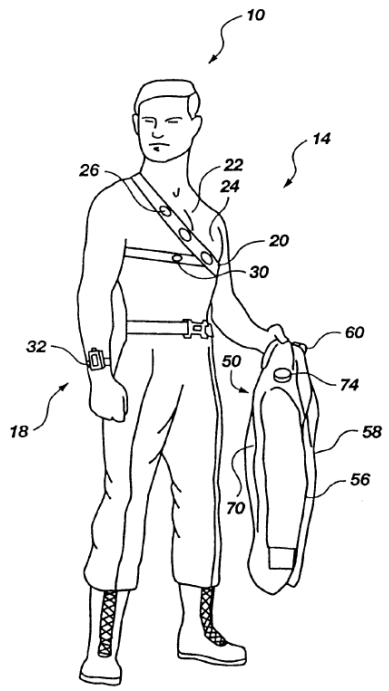

Fig. 1

Figure 1 depicts a soldier with wrist sensor/display unit 18 which communicates with an "executive controller" in soldier unit 50, disposed within harness 56 that is worn by the soldier. Ex. 1005, 5:66–6:2, 6:42–48. Figure 3 of Jacobsen is reproduced below.

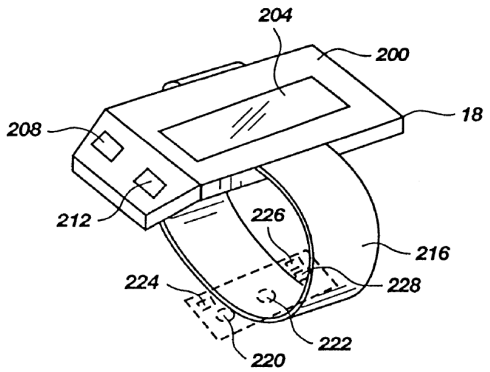

Fig. 3

Figure 3 shows wrist sensor/display unit 18 with display screen 204, sensor 220 to measure blood pressure, and sensor 222 for determining oxygen saturation. *Id.* at 9:21–22, 9:34–39. Other sensors that can be provided on

wrist sensor/display unit 18 include a sensor to measure body temperature. *Id.* at 6:21–37. The physiological data from the sensors is communicated from wrist sensor/display unit 18 to soldier unit 50 via communications mechanism 224. *Id.* at 6:45–49, 9:41–45. In turn, soldier unit 50 can communicate with a remote monitoring unit, such as a medic or command unit. *Id.* at 6:52–57.

Figure 4A of Jacobsen is reproduced below.

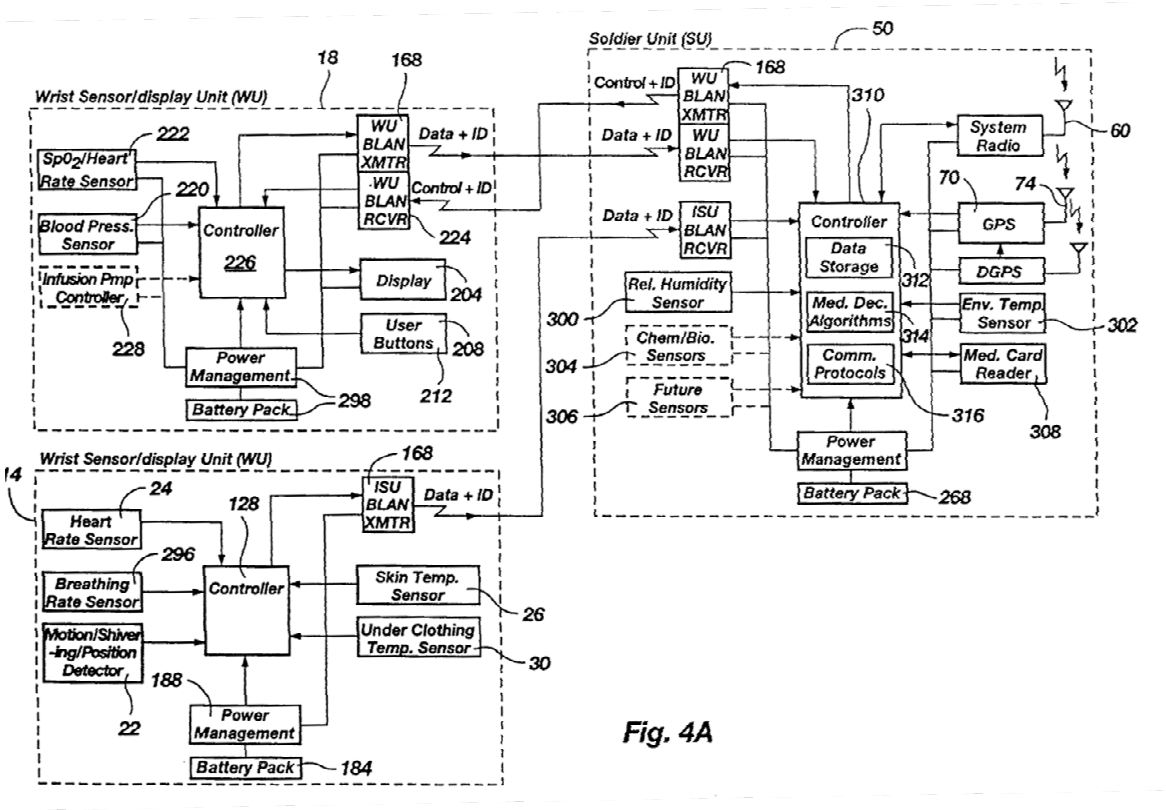

Fig. 4A

Figure 4A depicts the circuits for wrist sensor/display unit 18 and soldier unit 50.[5] Ex. 1005, 10:54–56. Wrist sensor/display unit 18 includes Sensors 220 and 222, Controller 226, Power Management 188, Battery Pack 184, Display 204, and WU BLAN (wireless body-LAN) transmitter and receiver

[5] The component numbered 14 is incorrectly labelled "wrist sensor/display unit" — it should be labelled "integrated sensor unit." Ex. 1005, 10:54–56.

168. The wireless body-LAN includes an antenna and is part of a "body local area network" that wirelessly communicates with soldier unit 50, which has a corresponding wireless body-LAN 168. *Id.* at 8:65–9:2, 11:5–14. Jacobsen discloses that "all units [such as sensor/display unit 18] may be equipped with a removable, nonvolatile memory module." *Id.* at 5:7–9.

Jacobsen includes a provision for a global positioning system used for geolocation of the soldier (which in the illustrative embodiment, is included in soldier unit 50). Ex. 1005, 7:24–26. Jacobsen also provides for a security mechanism, to ensure that none of the devices may be used against the soldier if captured by the enemy, requiring:

> [T]he entry of a password or some other code. If the wrong password is entered for more than one attempt, the device will automatically disable itself.

Id. at 15:5–10.

2. Independent Claim 1

The preamble of claim 1 requires, "A bi-directional wireless communication system."[6] Ex. 1001, 14:62–63. Petitioner relies on Jacobsen Figure 1 and accompanying description, which disclose sensor/display unit 18 and soldier unit 50 engaged in bi-directional wireless communication. Pet. 23 (*citing* Paradiso Decl. ¶ 87[1p]; Ex. 1005, Fig. 1, 5:66–7:55, 9:20–10:53).

[6] Petitioner assumes the preamble is limiting (Pet. 22), and Patent Owner does not address the issue. Because Petitioner has shown that the recitation in the preamble is satisfied by the prior art, there is no need to determine whether the preamble is limiting. *See Vivid Techs., Inc. v. Am. Sci. & Eng'g, Inc.*, 200 F.3d 795, 803 (Fed. Cir. 1999).

The first limitation of claim 1 requires, "a first personal device, the first personal device further comprising: (i) a processor; (ii) a memory; (iii) a power supply; (iv) at least one detector input; and (v) a short-range bi-directional wireless communications module." Ex. 1001, 14:64–15:4. Petitioner identifies sensor/display unit 18 as the first personal device, the controller 226 as the required processor, the "removable, nonvolatile memory module" as the required memory, battery pack 298 as the required power supply, the connection to sensor 220 as the required detector input, and wireless body-LAN 168 as the required short-range bi-directional wireless communications module. Pet. 24–33 (*citing* Paradiso Decl. ¶ 86[1a]– [1f]; Ex. 1005, Figs. 1, 3, 4A, 3:27–33, 5:7–9, 5:31–39, 6:45–51, 8:28–63, 8:66–67, 9:20–61, 10:54–11:27, 11:40–45, 11:62–63, 17:1–14, 17:66–18:3).

The second limitation of claim 1 requires:

> a second device communicating with the first device, the second device having a short-range bi-directional wireless communications module compatible with the short-range bi-directional wireless communications module of the first device . . .

Ex. 1001, 15:5–9. Petitioner identifies soldier unit 50 as the second device, and wireless body-LAN 168 within that unit as the short-range bi-directional wireless communications module compatible with the short-range bi-directional wireless communications module of the first device (*i.e.*, sensor/display unit 18). Pet. 33–36 (*citing* Paradiso Decl. ¶ 86[1g]; Ex. 1005, Fig. 4A, 5:35–39, 6:45–57, 9:42–47, 9:50–65, 11:1–27).

The third limitation of claim 1 requires, "a security mechanism governing information transmitted between the first personal device and the second device." Ex. 1001, 15:10–12. Petitioner relies on Jacobsen's

disclosure that wrist sensor/display unit 18 operates only when users enter the correct password:

> [E]ach device may contain a self-disabling means, such as software which requires the entry of a password or some other code. If the wrong password is entered for more than one attempt, the device will automatically disable itself.

Pet. 36–38 (*citing* Paradiso Decl. ¶ 87[1h]; Ex. 1005, 15:5–10).

Patent Owner argues that such a password mechanism is not a "security mechanism governing information transmitted between [the devices]" because it simply disables the wrist sensor/display unit 18 if the wrong password is entered, but it "in no way would govern information transmitted between the wrist/sensor unit and the soldier unit 50 as required by claim 1." PO Resp. 20. Focusing on the word "transmitted," Patent Owner argues that a security mechanism that disables a device prevents transmission of information, whereas the claim requires that information actually be transmitted. *Id.* at 21; Sur-Reply 11. Patent Owner argues that Petitioner's position would mean that the security mechanism of claim 1 could include a switch that turns the device off, or even a hammer that could be used to destroy the device. PO Resp. 22–23. Put another way, Patent Owner argues that "Jacobsen's self-disabling means is focused on the **device itself** and not the transmission of information by short-range communication modules between a first personal device and a second device." *Id.* at 23. Patent Owner also points out that Jacobsen itself states that the use of a password "will not be critical" for the soldier units. *Id.* at 24 (citing Ex. 1005, 15:5–15). In any event, argues Patent Owner, "simply providing access to a device does not govern information transmitted between two devices." *Id.* at 27.

Petitioner argues that Patent Owner improperly narrows the meaning of the plain language of "security mechanism governing information transmitted . . ." by attempting to import features of Figure 5 and accompanying description of the '233 patent into the claim. Reply 11. Petitioner disputes Patent Owner's argument differentiating between device access and access to information, given that the claim language specifies that the security mechanism governs information transmitted between *devices*, and claim 3 states that the security mechanism "employs authorization by the first personal device." *Id.* at 11–12. Petitioner argues that the plain meaning of "a security mechanism governing information transmitted between the first personal device and the second device" encompasses Jacobsen's password software, which leads to device disablement, given that an unauthorized user (e.g., an enemy combatant) who entered multiple incorrect passwords would disable Jacobsen's wrist sensor/display unit, preventing the user from accessing information available through it. *Id.* at 13. Petitioner also challenges Patent Owner's reliance on the word "transmitted," in which Patent Owner argues that preventing transmission of information does not satisfy the claim. *Id.* at 13. Instead, argues Petitioner, the specification describes security methods that would prevent transmission of information: "security keys" "held by a central agency" or needed to "release information," strategies for "authorization and authentication," including "biometrics," and "request[s] for access to a responsible third party." *Id.* (citing Ex. 1001, 13:50–56, 14:7–8). In addition, argues Petitioner, Jacobsen disables the device only if an incorrect password is entered twice — otherwise transmission of information is authorized. *Id.* at 15. Regarding Patent Owner's argument that Jacobsen states that use of a

password is not critical for soldier units, Petitioner points out that Jacobsen nonetheless discloses that "*each device* may contain a self-disabling means," *i.e.*, use of a password. *Id.* at 16 (citing Ex. 1001, 15:5–10).

We agree with Petitioner and are not persuaded by Patent Owner's arguments. As discussed above in Section III.C.1, the claim language should not be interpreted so narrowly as to exclude the use of passwords to control the transmission of information between the devices, particularly given that the '233 patent explicitly describes such use of passwords. Ex. 1001, 8:11–22. The password system of Jacobsen allows the transmission of information between devices if the correct password is entered, and disallows transmission if an incorrect password is entered (twice). Ex. 1005, 15:5–10. Based on our review of the complete record, we are persuaded that this satisfies the claim 1 requirement of "a security mechanism governing information transmitted between the first personal device and the second device." None of Patent Owner's attempts to narrow the plain meaning of this requirement convince us otherwise.

Accordingly, having considered the record, we determine that Petitioner has proved by a preponderance of the evidence that claim 1 is anticipated by Jacobsen.

3. Dependent Claims 7–10

Claim 7 depends from claim 1, and further requires "a detector connected to the at least one detector input." Ex. 1001, 15:24–25. Petitioner relies on sensors 220 and 222 of wrist sensor/display unit 18 as disclosing this requirement. Pet. 38–40 (*citing* Paradiso Decl. ¶ 88; Ex. 1005, 15:5–10).

Claim 8 depends from claim 7, and further requires that "the detector senses body or physiological parameters." Ex. 1001, 15:26–27. Petitioner relies on the fact that sensors 220 and 222 measure blood pressure and oxygen saturation. Pet. 40–41 (*citing* Paradiso Decl. ¶ 89; Ex. 1005, Fig. 4A, 9:37–41).

Claim 9 depends from claim 8, and further requires "the body or physiological parameters are selected from the group consisting of temperature, motion, respiration, blood oxygen content, and electroencephalogram." Ex. 1001, 15:28–31. Petitioner relies on the fact that sensor 222 measures oxygen saturation. Pet. 41 (*citing* Paradiso Decl. ¶ 90; Ex. 1005, 9:33–40).

Claim 10 depends from claim 1, and further requires "the first personal device further comprises a user interface module." Ex. 1001, 15:32–33. Petitioner relies on display screen 204 and control buttons 208 and 212 of wrist sensor/display unit 18. Pet. 41–43 (*citing* Paradiso Decl. ¶ 91; Ex. 1005, Figs. 3, 4A, 9:21–33).

Patent Owner raises no arguments, other than those directed to claim 1, with respect to these dependent claims. On review of the record, we determine that Petitioner has proved by a preponderance of the evidence that claims 7–10 are anticipated by Jacobsen.

4. Dependent Claim 14

Claim 14 depends from claim 1, and further requires:

> [T]he first personal device further comprises a data input/output port, the second device further comprises a data input/output port, and wherein the second device communicates with the first personal device using the data input/output ports.

Ex. 1001, 15:42–46. Petitioner relies on the wireless communication between the body-LAN 168 of wrist sensor/display unit 18 and the corresponding body-LAN 168 of soldier unit 50, characterizing the inputs and outputs of these components as the required data input/output ports. Pet. 43–44 (*citing* Paradiso Decl. ¶ 92; Ex. 1005, Fig. 4A, 6:45-57, 11:14–27).

As discussed above in Section III.C.3, the data input/output ports of claim 14 are separate from the "short-range bi-directional wireless communications module[s]" of claim 1. As Patent Owner points out, Petitioner is relying on the same wireless communication component (the body-LAN 168) as disclosing the wireless bi-directional communications modules of claim 1 and the data input and output port of claim 14. PO Resp. 31. Petitioner does not point to anything in Jacobsen that discloses a data input/output port that is separate from the body-LAN 168. Accordingly, we determine that Petitioner has not proved by a preponderance of the evidence that claim 14 is anticipated by Jacobsen.

E. Ground 2: Obviousness of Claims 1, 7–10, and 14 Over Say

Petitioner challenges claims 1, 7–10, and 14 as obvious under pre-AIA 35 U.S.C. § 103 over Say. Pet. 45–66.

1. Say

Say, titled "Analyte Monitoring Device And Methods Of Use," was filed April 30, 1998 and issued January 16, 2001. Ex. 1006, codes (54), (22), (45). Because Say was filed before the presumed earliest possible priority date for any challenged claim of the '233 patent (Oct. 23, 1998), for the purposes of this Decision, we consider this reference to be prior art under pre-AIA 35 U.S.C. § 102(e).

Say discloses an "analyte monitor" that includes a sensor placed on the skin, a sensor control unit in conductive contact with the sensor which includes a transmitter for transmitting data from the sensor to a display unit, which displays the level of an analyte. *Id.* at Abstr. For example, the device can monitor the level of glucose, lactate, or oxygen in individuals as part of their health maintenance. *Id.* at 1:5–15, 5:25–28, 15:50–51, 16:57–62. Figure 1 is reproduced below.

FIG. 1

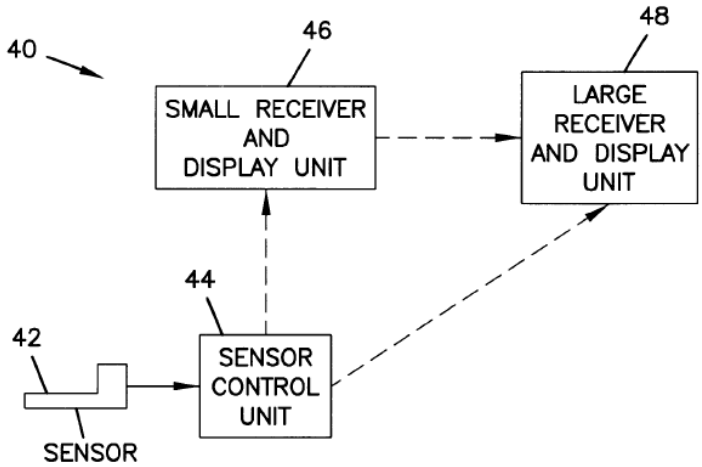

Figure 1 is a block diagram that depicts sensor 42, sensor control unit 44 and display units 46 and 48. *Id.* at 6:52–66. Sensor 42 may be implanted into the patient, and is coupled to sensor control unit 44, which collects signals from sensor 42 and transmits them to a display unit, such as display unit 46 or 48. *Id.* at 6:54–66. Figure 18B is reproduced below.

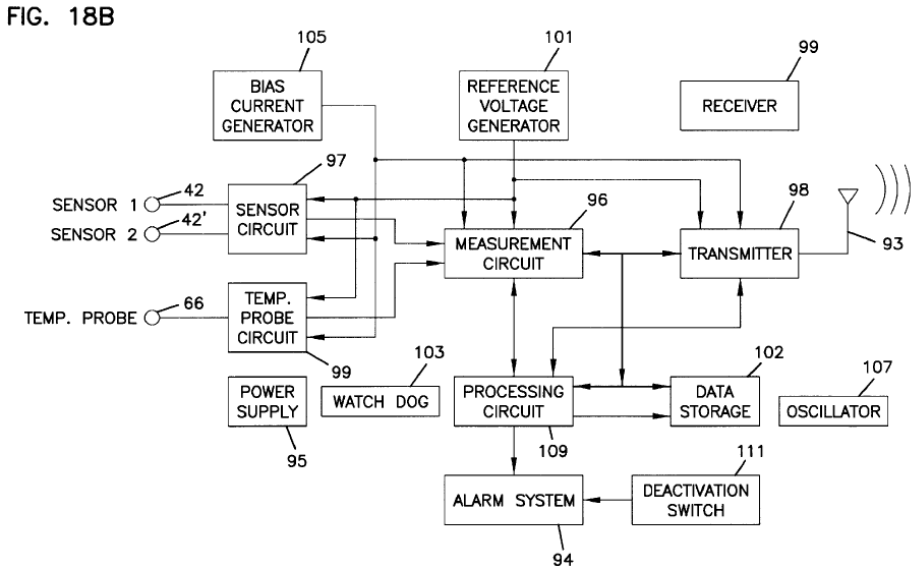

Figure 18B is a block diagram of sensor control unit 44, depicting, *inter alia*, sensor inputs 42 and 42′ applied to sensor circuit 97, temperature probe 66 applied to temperature probe circuit 99, power supply 95, processing circuit 109, data storage 102, and transmitter and receiver 98 and 99. *Id.* at 36:41–67, 37:26–35. The sensor control unit 44 optionally includes "an auditory or visual indicator that calibration data is needed" or other information provided to a patient. *Id.* at 44:8–19. Transmitter 98 and receiver 99 can wirelessly communicate with display units 46 or 48 via receivers 150 and transmitters 160 in those units. *Id.* at Fig. 22, 48:6–11, 48:49–52. Information transmitted between sensor control unit and the display units may be encrypted to eliminate false signals. *Id.* at 49:40–46.

2. *Independent Claim 1*

Petitioner relies on Figure 1 of Say as depicting a bi-directional wireless communication system as required by the preamble of claim 1 (as discussed above, we need not determine whether the preamble is limiting). Pet. 45–46 (*citing* Paradiso Decl. ¶ 94[1p]; Ex. 1006, Fig. 1, 3:63–65, 6:52–7:12).

Petitioner cites sensor control unit 44 for the required first personal device, including processing circuit 109 for the processor, data storage 102 for the memory, power supply 95 for the power supply, sensor inputs 42 or 42′ for the detector input, and transmitter 98 and receiver 99 for the short-range bi-directional wireless communications module. Pet. 46–56 (*citing* Paradiso Decl. ¶ 94[1a]–[1f]; Ex. 1006, Figs. 1, 15, 17, 18B, 19A–F, and accompanying description).

Petitioner cites the display units 46 or 48 for the required second device. Pet. 56–59 (*citing* Paradiso Decl. ¶ 94[1g]; Ex. 1006, Fig. 22, 4:53–54, 43:21–35, 48:4–17, 48:49–49:14, 50:32–51, 52:44–65). Because transmitter 160 and receiver 150 are depicted as separate modules, Petitioner anticipates a possible argument that those components are not a "bi-directional wireless communications module" as required by the claim, and argues that nonetheless this disclosure in Say would have taught or suggested a bi-directional module to one of ordinary skill in the art. Pet. 57–59 (*citing* Paradiso Decl. ¶ 94[1g]). Patent Owner does not raise this argument, and from our review of the record we determine that Petitioner has articulated sufficient reasoning with rational underpinning in support of this obviousness argument, demonstrating that a person of ordinary skill in the art would have been motivated to implement such a modification because configuring transmitter and receiver circuitry together as a transceiver was well-known and would have involved combining known prior art elements (receivers/transmitters) according to known methods (known use of transceivers) to yield predictable results (a component to send and receive data, as described by Say).

For the security mechanism requirement of claim 1, Petitioner relies on the disclosure in Say of the option of encrypting the information transmitted between sensor control unit and the display units, in which the sensor control unit transmits encrypted data and the receiver/display unit 46, 48 contains a key to decipher the encrypted data signal. Pet. 59–60 (*citing* Paradiso Decl. ¶ 94[1h]; Ex. 1006, 49:38–67).[7]

Patent Owner argues that Say's disclosed use of encryption does not teach a security mechanism that governs information transmitted between devices. PO Resp. 36–41. Patent Owner points out that, after the receiver/display unit 46, 48 receives the data transmitted from sensor control unit 44, it decrypts the encrypted data signal and "determines when false signals or 'crosstalk' signals are received by evaluation of the signal after it has been deciphered." *Id.* at 36 (citing Ex. 1006, 49:43–46). Based on this, Patent Owner argues that the encryption of Say does not govern information transmitted between devices but "is instead solely focused on establishing a communications scheme that avoids crosstalk, regardless of the <u>information</u> that may be transmitted using that scheme." *Id.* at 36–37 (citing Martin Decl. ¶ 91). Patent Owner argues that there is no connection between the encryption and the information itself, and no access or authorization for one device as distinguished from that of another device. *Id.* at 37. Patent Owner further argues that the encryption of Say is similar to encrypting public website transmissions over a network, or the encryption used in Bluetooth, where the information is unsecured at the receiving end, unlike the example

[7] Petitioner alternatively relies on a provision in Say for transmitting a unique code to identify the sensor control unit. Pet. 60 (citing Paradiso Decl. ¶ 94[1h]; Ex. 1006, 49:15-37). It is not necessary for this Decision to consider that alternative.

of Figure 5 of the ’233 patent, where information is inaccessible by unauthorized entities. *Id.* at 37–39 (citing Martin Decl. ¶¶ 92–95). In addition, Patent Owner argues that Say’s use of encryption does not govern information transmitted *between* devices, because Say only discloses encrypting transmissions *from* the sensor control unit *to* the receiver/display unit. *Id.* at 40–41 (citing Martin Decl. ¶¶ 96–98).

Petitioner responds that the ’233 patent contemplates “standard encryption algorithms” that prevent an “unsophisticated interceptor to interpret the data,” and is not limited to encryption specifically connected to data being transmitted or the ability to distinguish between devices. Reply 17–18 (citing Ex. 1001, claim 2, 13:43–46). Petitioner also argues that the plain language of the claims does not require bi-directional communication. *Id.* at 20.

We agree with Petitioner and are not persuaded by Patent Owner’s arguments. As discussed above in Section II.A, the ’233 patent specifically provides for encryption techniques such as security keys and public/private key exchange. Ex. 1001, 13:24–14:14. Also, claim 2 of the ’233 patent specifically requires encryption for the required security mechanism. *Id.* at 15:13–14. The encryption system of Say allows the transmitted data to be decrypted only by the receiver/display unit that has the correct encryption key. Ex. 1006, 49:42–43. Although Say uses the encryption to eliminate crosstalk, the fact remains that the encryption controls the transmission of information by limiting the use of the information to devices that have the correct key. We are persuaded that this satisfies the claim 1 requirement of “a security mechanism governing information transmitted between the first

personal device and the second device." None of Patent Owner's attempts to narrow the plain meaning of this requirement convince us otherwise.

Other than arguing that Say does not teach the claimed security mechanism, Patent Owner does not have other arguments directed to Petitioner's challenge of claim 1 based on Say. Accordingly, having considered the record, we determine that Petitioner has proved by a preponderance of the evidence that claim 1 would have been obvious over Say.

3. Dependent Claims 7–10, and 14

For dependent claim 7, Petitioner relies on the fact that sensor 42 is coupled to sensor control unit 44 via conductive contacts. Pet. 60–61(*citing* Paradiso Decl. ¶ 95; Ex. 1006, Fig. 1, 2:13–61, 3:63–65).

For dependent claims 8 and 9, Petitioner relies on the sensors that measure body temperature and blood oxygen content. Pet. 61–63 (*citing* Paradiso Decl. ¶¶ 96–97; Ex. 1006, Figs. 6, 8, 11, and accompanying description).

For dependent claim 10, Petitioner relies on the provisions for sensor control unit 44 to communicate information to the patient via auditory or visual indicators, and for user input. Pet. 64–65 (*citing* Paradiso Decl. ¶ 98; Ex. 1006, 6:52–7:12, 43:45–57, 44:8–19).

For dependent claim 14, Petitioner relies on the inputs and outputs of the wireless transmitters and receivers of sensor control unit 44 and the display units. Pet. 65–66 (*citing* Paradiso Decl. ¶ 99).

Other than arguing that Say does not teach the claim 1 security mechanism, Patent Owner does not have any specific arguments refuting Petitioner's Ground 2 challenge to dependent claims 7–10. Accordingly, we

determine that Petitioner has proved by a preponderance of the evidence that claims 7–10 would have been obvious over Say.

However, for the reasons set forth in Section D.4III.C.3 above, Petitioner's reliance on the inputs and outputs of the wireless communications modules cannot support claim 14's requirement of data input/output ports. Therefore, we determine that Petitioner has not proved by a preponderance of the evidence that claim 14 would have been obvious over Say.

F. Ground 3: Obviousness of Claims 1, 7–10, and 14 Over Jacobsen and Say

Petitioner challenges claims 1, 7–10, and 14 as obvious over the combination of Jacobsen and Say. Pet. 66–71. Petitioner proposes this combination as an alternative to relying on Jacobsen alone, in the event that the disclosure of the use of passwords in Jacobsen is determined to not disclose the security mechanism limitation of claim 1. *Id.* at 66. Petitioner submits evidence that, given the disclosures of Jacobsen and Say as discussed above, and the knowledge of one of ordinary skill in the pertinent art, that person would have been motivated to configure Jacobsen's security features implemented in its system to include mechanisms that use encryption to govern information transmitted between wrist sensor/display unit 18 and soldier unit 50, similar to the mechanisms disclosed by Say. Pet. 67–70 (*citing* Paradiso Decl. ¶¶ 104–110).

Because we have determined that Petitioner has proved by a preponderance of the evidence that claims 1 and 7–10 are anticipated by Jacobsen, we do not consider this alternative argument as to those claims. Also, as described in Sections III.D.4 and III.E.3 above, we have determined

that Petitioner has not proved by a preponderance of the evidence that Jacobsen anticipates claim 14, or that Say renders claim 14 obvious. For the same reasons, we conclude that Petitioner has failed to prove that claim 14 would have been obvious over the combination of Jacobsen and Say.

G. Grounds 4–6: Obviousness of Claim 13 Over Jacobsen, Say, and Quy; Obviousness of Claims 24 and 25 Over Jacobsen, Say, and Geva; Obviousness of Claim 26 Over Jacobsen, Say, and Reber

Petitioner characterizes Grounds 4–6 as relying on the combination of Jacobsen and Say, together with additional references: Quy, Geva, or Reber, respectively. Pet. 71–91. However, our review of the detailed basis for Petitioner's challenges under Grounds 4–6 reveals some bare references to the Say reference but no actual reliance on its contents, whether taken alone or in some combination with the other references. As discussed in Section III.F above, it is unnecessary to consider the combination of Jacobsen and Say in connection with the requirements of claim 1 — it is sufficient to consider the disclosures of Jacobsen alone. For each ground, some aspect of a "tertiary" reference is asserted to be incorporated into a Jacobsen system. Therefore, for our analyses of Grounds 4–6, we consider Petitioner's actual arguments based only on Jacobsen in combination with Quy, Geva, or Reber, as applicable.

Claim 13 depends from claim 1, and further requires "the short-range wireless communications further comprises BLUETOOTH technology." Ex. 1001, 15:39–41. For Ground 4, Petitioner argues that it would have been obvious to implement that requirement in Jacobsen based on the disclosure of Bluetooth technology in Quy, given that Bluetooth is type of short-range communications scheme such as generally disclosed in Jacobsen

as the means of communication between wrist sensor/display unit 18 and soldier unit 50. Pet. 71–75 (*citing* Paradiso Decl. ¶ 113). Quy discloses a "wireless health-monitoring apparatus" that includes a "health monitoring device" that includes a physiologic sensor that transmits data via Bluetooth to a "wireless web device." Ex. 1007, Fig. 2, 2:55–56, 3:3–4, 4:1–4, 6:26–30, 6:44–45, 7:1–30, 12:40–47.

Claim 24 depends from claim 1, and further requires "the first personal device further comprises a location determination module that determines the geographical location of the first personal device," and claim 25 depends from claim 24, and further requires "the location determination module further comprises a GPS receiver." Ex. 1001, 16:10–15. For Ground 5, Petitioner argues that it would have been obvious to implement these requirements in wrist sensor/display unit 18 of Jacobsen based on the disclosure of GPS technology in Geva, and given that Jacobsen itself discloses the use of GPS in soldier unit 50. Pet. 75–82 (*citing* Ex. 1005, Figs. 1, 4, 7:24–39, 9:58–10:3, 18:8–15; Paradiso Decl. ¶ 115). Geva discloses a "personal ambulatory cellular health monitor 12" which contains physiological data sensors and also includes a "personal location subsystem" that uses GPS. Ex. 1008, Figs. 1, 2C, 5:25–63, 6:51–63.

Claim 26 depends from claim 1, and further requires "the bi-directional communications module has a powered-down state and a powered-up state, and further comprising a means for signaling the bi-directional communications module to transition from the powered-down state to the powered-up state." Ex. 1001, 16:16–20. For Ground 6, Petitioner argues that it would have been obvious to implement this requirement in wrist sensor/display unit 18 of Jacobsen based on the

disclosure of a power button in Reber, given that the ’233 patent explains that an example of the means for signaling can be the throwing of a switch. Pet. 82–90 (*citing* Ex. 1001, 14:33–35; Paradiso Decl. ¶ 118). Reber discloses a “noninvasive apparatus” with a “biosensor,” a communication interface, which may comprise a “radio frequency transceiver,” a power source, and a power button, which power button causes the power source to selectively power various components of the apparatus, including a radio frequency transceiver in the communication module. Ex. 1020, Fig. 1, 2:20–5:3, 4:19–30, 4:56–63.

For each of Grounds 4–6, Petitioner offers testimony of its expert Dr. Paradiso, providing articulated reasoning with rational underpinning to the effect that one of ordinary skill would have been motivated to incorporate into Jacobsen the relevant technology disclosed in the additional references (*i.e.*, Bluetooth in Quy; GPS in Geva; a power button in Reber), given that Jacobsen and the other references involve analogous biometric monitoring or biological sampling technology, that in each case the combination would have involved combining well known prior art elements using known techniques, the benefits of the technology in improving the functionality of Jacobsen would have been recognized, and the combination would have required only routine design considerations yielding foreseeable results with an expectation of success. Pet. 72–75, 77–81, 85–90 (*citing* Paradiso Decl. ¶¶ 113, 115, 116, 118).

For Ground 4, Patent Owner argues that the combination with Quy would not have been motivated because, as of the applicable priority date of claim 13 (March 28, 2001), Bluetooth required a significant amount of power to operate. PO Resp. 47 (citing Martin Decl. ¶¶ 117–118); Sur-Reply

20–21. In response, Petitioner submits evidence that Bluetooth was a known comparatively lower-power standard that at the time had methods for conserving power, and was a likely choice for short-range communications in portable systems like Jacobsen. Reply 24 (citing Paradiso Decl. ¶ 113; Ex. 1007, 7:17–30; Ex. 1079, 5:20–32; Ex. 1080, 7:64–8:6).

For Ground 5, Patent Owner argues that the combination with Geva would not have been motivated because: (i) Jacobsen already includes GPS in soldier unit 50; (ii) the GPS in Geva also is positioned on the body of the subject (as opposed to the wrist); and (iii) as of the applicable priority date of claims 24 and 25 (May 25, 1999), GPS receivers were relatively big and bulky and therefore unsuited for a wrist unit. PO Resp. 49–51 (citing Martin Decl. ¶¶ 123–126); Sur-Reply 21–22. In response, Petitioner argues Patent Owner's assertions are conclusory and lack explanation, and cites evidence that it was known to include GPS receivers in devices similarly-sized to Jacobsen's wrist unit. Reply 25–26 (citing Paradiso Decl. ¶ 115; Ex. 1078, Figs. 1–2, 6, 2:49–52, 5:9–24, 6:56–7:6).

For Ground 6, Patent Owner argues that the combination with Reber would not have been motivated because the power button of Reber merely powers the entire device on and off, as opposed to transitioning a bi-directional communications module between two different powered states, as required by claim 26. PO Resp. 53–55 (citing Martin Decl. ¶¶ 128–133); Sur-Reply 22–23. In response, Petitioner argues that the disclosure in Reber that the power button "selectively powers" system components sufficiently suggests the combination, and that in any event the power control over the entire system also controls the power of the individual components in accord with the claim requirement. Reply 26–27.

From our review of the record, including the testimony of Petitioner's expert Dr. Paradiso, we are persuaded that Petitioner has articulated sufficient reasoning with rational underpinning to support the reliance on the combinations of Jacobsen with Quy for Ground 4, Geva for Ground 5, and Reber for Ground 6. For each ground, Petitioner's reliance on the tertiary references demonstrates that the particular features disclosed (Bluetooth, GPS, and a power button) were well known and readily incorporated into a Jacobson-type system, and that one of ordinary skill in the art would have been motivated to do so with a reasonable expectation of success. Patent Owner's arguments are unpersuasive, not sufficiently taking into account that the test for obviousness is not whether the features of a secondary reference may be bodily incorporated into the structure of the primary reference. *In re Keller*, 642 F.2d 413, 425 (CCPA 1981). Instead, the relevant issue is "what the combined teachings of the references would have suggested to those of ordinary skill in the art." *Id.* "Combining the *teachings* of references does not involve an ability to combine their specific structures." *In re Nievelt*, 482 F.2d 965, 968 (CCPA 1973). Moreover, as Petitioner points out, the fact that an asserted combination introduces "simultaneous advantages and disadvantages [] does not necessarily obviate motivation to combine." *Medichem, S.A. v. Rolabo, S.L.*, 437 F.3d 1157, 1165 (Fed. Cir. 2006).

Accordingly, we are persuaded that Petitioner has proved by a preponderance of the evidence that claim 13 would have been obvious over Jacobsen and Quy, that claims 24 and 25 would have been obvious over Jacobsen and Geva, and that claim 26 would have been obvious over Jacobsen and Reber.

H. Ground 7: Obviousness of Claims 15, 16, and 22 Over Say and Gabai

Claim 15 depends from claim 1, and further requires "a central communications base station communicating with the first personal device using short-range wireless communications;" claim 16 depends from claim 15, and further requires "the short-range wireless communications is selected from the group consisting of HomeRF™, BLUETOOTH, and wireless LAN;" and claim 22 depends from claim 15, and further requires "the central communications base station further comprises a connection to the Internet." Ex. 1001, 15:47–52, 16:4–6.

Petitioner relies on the combination of Say and Gabai, and argues that it would have been obvious to implement the requirements of claims 15, 16, and 22 in the system of Say based on the disclosure in Gabai of a base communication unit that wirelessly communicates with a control device. Pet. 91–99 (*citing* Paradiso Decl. ¶¶ 120–122). Gabai discloses an interactive doll-like toy comprising a control device and sensors and input devices, in which the control device incudes a radio transceiver and antenna that allow it to engage in bi-directional wireless communications with a radio transceiver and antenna of a base communication unit, and which base unit can in turn communicate with a computer that provides an internet connection. Ex. 1040, Figs. 1A, 2, 5–7, 7:16–24, 9:22–59, 10:23–43, 11:8–20, 11:65–12:18.

Petitioner offers testimony of its expert Dr. Paradiso, providing articulated reasoning with rational underpinning to the effect that one of ordinary skill in the art would have been motivated to incorporate into Jacobsen the relevant technology disclosed Gabai, given that Say discloses provisions for long-range communication connections such as paging

capabilities and remote communication with a doctor's office, and that the combination would have involved combining well known prior art elements using known techniques, the benefits of the technology in improving the functionality of Jacobsen would have been recognized, and the combination would have required only routine design considerations yielding foreseeable results with an expectation of success. Pet. 94–97 (*citing* Ex. 1006, 47:57–49:14; Paradiso Decl. ¶¶ 120–122).

For this ground, Patent Owner argues that Petitioner fails to explain why one of ordinary skill in the art would have been motivated to add an additional communications channel to Say to communicate with a base station, and argues that one of ordinary skill would not have looked to children's toys for potential improvements to the Say system. Pet. 94–97 (*citing* Ex. 1006, 47:57–49:14; Paradiso Decl. ¶¶ 120–122); Sur-Reply 23.

In response, Petitioner argues that Say provides motivation to allow its sensor control unit to communicate longer distances using another communications link, and that the evidence shows the known benefits an Internet connection would have provided portable medical systems using base stations. Reply 27–28 (citing Paradiso Decl. ¶ 120). Petitioner further argues that the teachings of Gabai are not limited to toys and Gabai's communication features are similar to Say's, and one of ordinary skill in the art would have thus considered Gabai's teachings when implementing Say's system. *Id.*

Like for Grounds 4–6, we are persuaded that Petitioner has articulated sufficient reasoning with rational underpinning to support the reliance on the combination of Say and Gabai. Although Gabai is directed to an interactive toy, its disclosure relating to bi-directional wireless communications with a

base communication unit is pertinent art— satisfying the criterion that "[a] reference is reasonably pertinent if, even though it may be in a different field from that of the inventor's endeavor, it is one which, because of the matter with which it deals, logically would have commended itself to an inventor's attention in considering his problem." *In re Klein*, 647 F.3d 1343, 1348 (Fed. Cir. 2011) (quoting *In re Clay*, 966 F.2d 656, 659 (Fed. Cir. 1992)).

Accordingly, we are persuaded that Petitioner has proved by a preponderance of the evidence that claims 15, 16, and 22 would have been obvious over Say and Gabai.

IV. CONCLUSION[8]

For the reasons above, Petitioner has shown by a preponderance of the evidence that claims 1, 7–10, 13, 15, 16, 22, and 24–26 of the '233 patent are unpatentable, and claim 14 of the '233 patent is not shown unpatentable, as summarized in the following table.

Claims	35 U.S.C. §	References/ Basis	Claims Shown Unpatentable	Claims Not Shown Unpatentable
1, 7–10, 14	102	Jacobsen	1, 7–10	14
1, 7–10, 14	103(a)	Say	1, 7–10	14
1, 7–10, 14	103(a)	Jacobsen, Say		14

[8] Should Patent Owner wish to pursue amendment of the challenged claims in a reissue or reexamination proceeding subsequent to the issuance of this decision, we draw Patent Owner's attention to the April 2019 *Notice Regarding Options for Amendments by Patent Owner Through Reissue or Reexamination During a Pending AIA Trial Proceeding*. *See* 84 Fed. Reg. 16,654 (Apr. 22, 2019). If Patent Owner chooses to file a reissue application or a request for reexamination of the challenged patent, we remind Patent Owner of its continuing obligation to notify the Board of any such related matters in updated mandatory notices. *See* 37 C.F.R. § 42.8(a)(3), (b)(2).

Claims	35 U.S.C. §	References/ Basis	Claims Shown Unpatentable	Claims Not Shown Unpatentable
13	103(a)	Jacobsen, Say, Quy	13	
24, 25	103(a)	Jacobsen, Say, Geva	24, 25	
26	103(a)	Jacobsen, Say, Reber	26	
15, 16, 22	103(a)	Say, Gabai	15, 16, 22	
Overall Outcome			1, 7–10, 13, 15, 16, 22, 24–26	14

V. ORDER

In consideration of the foregoing, it is hereby:

ORDERED that, based on a preponderance of the evidence, claims 1, 7–10, 13, 15, 16, 22, and 24–26 of U.S. Patent No. 7,088,233 B2 are held to be unpatentable;

FURTHER ORDERED that, based on a preponderance of the evidence, claim 14 of U.S. Patent No. 7,088,233 B2 is held to be not unpatentable; and

FURTHER ORDERED that, because this is a final written decision, parties to this proceeding seeking judicial review of our decision must comply with the notice and service requirements of 37 C.F.R. § 90.2.

PETITIONER:

Naveen Modi
Yar Chaikovsky
Joseph Palys
David Okano
Jennifer Bailey
Adam Seitz
naveenmodi@paulhastings.com
yarchaikovsky@paulhastings.com
josephpalys@paulhastings.com
davidokano@paulhastings.com
jennifer.bailey@eriseip.com
adam.seitz@eriseip.com

PATENT OWNER:

George Beck
Eley Thompson
Ruben Rodrigues
gbeck@foley.com
ethompson@foley.com
rrodrigues@foley.com