Trials@uspto.gov
571-272-7822

Paper 11
Date: March 9, 2021

UNITED STATES PATENT AND TRADEMARK OFFICE

BEFORE THE PATENT TRIAL AND APPEAL BOARD

LG ELECTRONICS, INC. AND HISENSE CO., LTD.,
Petitioner,

v.

POLARIS POWERLED TECHNOLOGIES, LLC,
Patent Owner.

IPR2020-01337
Patent 8,223,117 B2

Before PHILLIP J. KAUFFMAN, KALYAN K. DESHPANDE, and KARA L. SZPONDOWSKI, *Administrative Patent Judges.*

SZPONDOWSKI, *Administrative Patent Judge*.

DECISION
Denying Institution of *Inter Partes* Review
35 U.S.C. § 314

I. INTRODUCTION

LG Electronics, Inc. and Hisense Co., Ltd. (collectively "Petitioner") filed a Petition (Paper 1, "Pet.") to institute an *inter partes* review of claims 1, 2, 4–7, 9, 15, 16, and 18 of U.S. Patent 8,223,117 B2, issued July 17, 2012, (Ex. 1001, "the '117 patent"). Polaris PowerLED Technologies, LLC ("Patent Owner") filed a Preliminary Response (Paper 9, "Prelim. Resp.").

We have jurisdiction under 35 U.S.C. § 314.

Institution of *inter partes* review is authorized when "the information presented in the petition . . . and any response . . . shows that there is a reasonable likelihood that the petitioner would prevail with respect to at least 1 of the claims challenged in the petition." 35 U.S.C. § 314(a) (2018). Upon considering the evidence presented and the arguments made, we determine Petitioner has not demonstrated a reasonable likelihood of prevailing with respect to at least one of the challenged claims. Accordingly, we do not institute *inter partes* review.

II. BACKGROUND

A. Real-Parties-in-Interest

Petitioner identifies LG Electronics, Inc., LG Electronics U.S.A., Inc., Hisense Co., Ltd., Hisense Electronics Manufacturing Co. of America Corp., Hisense Int'l Co., Ltd., Hisense Int'l (HK) Co., Ltd., Hisense Int'l (Hong Kong) America Investment Co. Ltd., Hisense USA Corp., and Qingdao Hisense Electronics Co. Ltd. as the real-parties in interest. Pet. 63.

B. Related Matters

The parties advise that the '117 patent is currently involved in the following proceedings:

Polaris PowerLED Techs., LLC v. Hisense Elecs. Mfg. Co. of Am. Corp. et al., No. 8:20-cv-00123 (C.D. Cal.);

Polaris PowerLED Techs., LLC v. LG Elecs. Inc. et al., No. 8-20-cv-00125 (C.D. Cal.);

Pet. 64; Paper 6, 1.

Petitioner advises that ’117 patent was at issue in *Polaris PowerLED Techs., LLC v. VIZIO, Inc., et al.,* No. 8:18-cv-01571 (C.D. Cal.), which has been dismissed. Pet. 64; Paper 6, 1.

Two prior petitions for *inter parte*s review were filed against the ’117 patent: IPR2018-01262 and IPR2020-00043. Pet. 10–11; Paper 6, 1. The Board denied institution in both cases. Pet. 10–11.

Petitioner also concurrently filed a second petition for *inter partes* review of the ’117 patent in *LG Elecs., Inc. et al. v. Polaris PowerLED Techs., LLC*, IPR2020-01283 (PTAB). Paper 6, 1.

C. The ’117 Patent (Ex. 1001)

The ’117 patent is titled “Method and Apparatus to Control Display Brightness with Ambient Light Correction” and generally relates to “adjusting the brightness level to compensate for changes in ambient lighting” for “a visual information display system.” Ex. 1001, code (54), 1:19–22. The ’117 patent discloses an embodiment having a fully automated brightness adjustment mode that takes into account both ambient lighting conditions and user preference for brightness, as well as an embodiment allowing the user to switch between an automatic mode and a manual mode, which only takes into account user preference for brightness. *Id.* at 1:60–2:6, 2:17–30, 6:37–41.

In a fully automated mode, the ’117 patent describes a user input, such as a dimming control, and a light sensor, which detects the ambient light level and generates a corresponding light sensor output. *Id.* at 4:45–52, 5:3–5, 5:15–20, Figs. 1, 2. In one embodiment, a multiplier outputs a combined signal that is the product of the user input and a scaled light sensor output. *Id.* at 5:20–22, Fig. 2. The product is added to a dark level bias, which is

used to maintain the brightness above a predetermined level when the ambient light level decreases to approximately zero, and adjusted to generate a brightness control signal for a display driver. *Id.* at 2:57–60, 4:49–51, 5:22–27, 5:39–41, Fig. 2.

D. Illustrative Claim

Among the challenged claims, claims 1 and 15 are independent. Petitioner challenges claims 1, 2, 4–7, 9, 15, 16, and 18 of the '117 patent. Pet. 1. Independent claim 1, reproduced below with brackets noting Petitioner's identifiers, is illustrative of the claimed subject matter:

> 1. [1.Pre] A brightness control circuit with selective ambient light correction comprising:
>
> [1.A] a first input configured to receive a user signal indicative of a user selectable brightness setting;
>
> [1.B] a light sensor configured to sense ambient light and to output a sensing signal indicative of the ambient light level;
>
> [1.C] a multiplier configured to selectively generate a combined signal based on both the user signal and the sensing signal; and
>
> [1.D] a dark level bias configured to adjust the combined signal to generate a brightness control signal that is used to control a brightness level of a visible display such that the brightness control signal is maintained above a pre-determined level when the ambient light level decreases to approximately zero.

Ex. 1001, 12:28–43.

E. Prior Art

Petitioner relies on the following references (*see* Pet. 24), as well as the Declaration of Ralph V. Wilhelm (Ex. 1102).

Reference	Exhibit	Patent/Printed Publication
Oki	1103	Japanese App. Pub. No. 2003-150291, published May 23, 2003.
Toffolo	1111	U.S. Patent No. 6,337,675 B1 to Toffolo et al., issued Jan. 8, 2002, filed Oct. 30, 1997
Henry	1139	U.S. Patent No. 6,198,234 B1 to Henry, issued Mar. 6, 2001, filed June 9, 1999

F. Asserted Grounds

Petitioner asserts that claims 1, 2, 4–7, 9, 15, 16, and 18 are unpatentable based upon the following grounds (Pet. 24):

Ground	Claim(s) Challenged	35 U.S.C. §	Reference(s)/Basis
1	1, 2, 4, 5, 7, 15, 16, 18	102(a)	Oki
2	1, 2, 4, 5, 7, 9, 15, 16, 18	103(a)	Oki
3	6	103(a)	Oki, Henry
4	9	103(a)	Oki, Toffolo

III. ANALYSIS

A. Legal Standards

Anticipation "requires that every element and limitation of the claim was previously described in a single prior art reference, either expressly or inherently, so as to place a person of ordinary skill in possession of the invention." *Sanofi-Synthelabo v. Apotex, Inc.*, 550 F.3d 1075, 1082 (Fed. Cir. 2008) (citing *Schering Corp. v. Geneva Pharms., Inc.*, 339 F.3d 1373, 1379 (Fed. Cir. 2003); *Continental Can Co. v. Monsanto Co.*, 948 F.2d 1264, 1267–69 (Fed. Cir. 1991)). Whether a reference anticipates is assessed from the perspective of an ordinarily skilled artisan. *See Dayco Prods., Inc. v. Total Containment, Inc.*, 329 F.3d 1358, 1368 (Fed. Cir. 2003) ("[T]he dispositive question regarding anticipation [i]s whether one

skilled in the art would reasonably understand or infer from the [prior art reference's] teaching that every claim element was disclosed in that single reference." (quoting *In re Baxter Travenol Labs.*, 952 F.2d 388, 390 (Fed. Cir. 1991)) (alterations in original)). "[U]nless a reference discloses within the four corners of the document not only all of the limitations claimed but also all of the limitations arranged or combined in the same way as recited in the claim, it cannot be said to prove prior invention of the thing claimed and, thus, cannot anticipate under 35 U.S.C. § 102." *Net MoneyIN, Inc. v. VeriSign, Inc.*, 545 F.3d 1359, 1371 (Fed. Cir. 2008).

A patent claim is invalid as obvious if the differences between the claimed subject matter and the prior art are "such that the subject matter as a whole would have been obvious at the time the invention was made to a person having ordinary skill in the art to which said subject matter pertains." *See* 35 U.S.C. § 103(a). "The ultimate determination of obviousness is a question of law, but that determination is based on underlying factual findings." *In re NuVasive, Inc.*, 842 F.3d 1376, 1381 (Fed. Cir. 2016). The underlying factual findings include: (1) "the scope and content of the prior art"; (2) "differences between the prior art and the claims at issue"; (3) "the level of ordinary skill in the pertinent art"; and (4) the presence of secondary considerations of nonobviousness such "as commercial success, long felt but unsolved needs, failure of others," and unexpected results. *Id.* (citing, *inter alia*, *Graham v. John Deere Co.*, 383 U.S. 1, 17–18 (1966)).

A patent claim "is not proved obvious merely by demonstrating that each of its elements was, independently, known in the prior art." *KSR*, 550 U.S. at 418. An obviousness determination requires finding "both 'that a skilled artisan would have been motivated to combine the teachings of the

prior art references to achieve the claimed invention, and that the skilled artisan would have had a reasonable expectation of success in doing so.'" *Intelligent Bio-Sys., Inc. v. Illumina Cambridge Ltd.*, 821 F.3d 1359, 1367–68 (Fed. Cir. 2016); *see also KSR*, 550 U.S. at 418. A motivation to combine the teachings of two references can be "found explicitly or implicitly in market forces; design incentives; the 'interrelated teachings of multiple patents'; 'any need or problem known in the field of endeavor at the time of invention and addressed by the patent'; and the background knowledge, creativity, and common sense of the person of ordinary skill." *Plantronics, Inc. v. Aliph, Inc.*, 724 F.3d 1343, 1354 (Fed. Cir. 2013). Further, an assertion of obviousness "cannot be sustained by mere conclusory statements; instead, there must be some articulated reasoning with some rational underpinning to support the legal conclusion of obviousness." *KSR*, 550 U.S. at 418; *NuVasive, Inc.*, 842 F.3d at 1383 (a finding of a motivation to combine "must be supported by a 'reasoned explanation'").

"In an [*inter partes* review], the petitioner has the burden from the onset to show with particularity why the patent it challenges is unpatentable." *Harmonic Inc. v. Avid Tech., Inc.*, 815 F.3d 1358, 1363 (Fed. Cir. 2016) (citing 35 U.S.C. § 312(a)(3) (2012)); *see also Intelligent Bio-Sys.*, 821 F.3d at 1369 ("It is of the utmost importance that petitioners in the IPR proceedings adhere to the requirement that the initial petition identify 'with particularity' the 'evidence that supports the grounds for the challenge to each claim.'" (quoting 35 U.S.C. § 312(a)(3))). Therefore, to prevail in an *inter partes* review, Petitioner must explain how the proposed combinations of prior art would have rendered the challenged claims unpatentable. At this

preliminary stage, we determine whether the information presented in the Petition shows there is a reasonable likelihood that Petitioner would prevail in establishing that at least one of the challenged claims would have been anticipated and/or obvious over the proposed combinations of prior art.

B. Discretion to Deny Institution of Inter Partes Review Under 35 U.S.C. §§ 314(a) and 325(d)

As stated above, Petitioner concurrently filed IPR2020-01283, challenging claims 1, 2, 4–7, 9, 15, and 16 of the '117 patent. Petitioner filed a Notice Ranking Petitions for *Inter Partes* Review of U.S. Patent No. 8,223,117, (Paper 4, "Ranking Paper"), and Patent Owner filed a Response to the Ranking Paper (Paper 10, "Response to Ranking Paper.").

In the Ranking Paper, Petitioner ranked the IPR2020-01283 Petition first, and argued that material differences between the petitions justified instituting review in both proceedings. Ranking Paper 1–4. In particular, Petitioner argues that each primary reference in IPR2020-01283 "presents different mathematical ways of calculating a brightness control signal based on user signals, a sensing signal, and a dark level bias," and Oki, the primary reference in the current Petition, "teaches another way of calculating the brightness control signal using multiplication of the claimed signals." Ranking Paper 1. Petitioner also contends that certain alleged priority issues involving Oki present material differences between the Petitions. *Id.* at 2; *see also* Pet. 13–14.

In Response, Patent Owner argues that "the Board should exercise its discretion and deny institution" of the current Petition, or, restrict Petitioner to a single Petition. Response to Ranking Paper 5. Patent Owner argues that Petitioner has failed "to identify why the alleged differences in the two

petitions are sufficiently material to justify maintaining two proceedings." *Id.* at 1; *see also id.* at 2–3. Patent Owner also asserts that "there is no meaningful 'priority issue.'" *Id.* at 1; *see also id.* at 3–5. Patent Owner further contends that the current Petition should be denied under 35 U.S.C. § 314(a) as an improper follow-on petition under *General Plastic Co. v. Canon Kabushiki Kaisha*, IPR2016-01357, Paper 19 (PTAB Sept. 6, 2017) (precedential) and *Valve Corp. v. Elec. Scripting Prods., Inc.*, IPR2019-00062, Paper 11 (PTAB Apr. 2, 2019) (precedential) "*Valve I*"), based upon petitions IPR2018-01262, IPR2020-00043, and IPR2020-01283. Prelim. Resp. 1–18. Patent Owner also contends that the current Petition should be denied under 35 U.S.C. § 325(d) under the *Advanced Bionics, LLC. v. Med-El Elektromedizinische Geräte GmbH*, IPR2019-01469, Paper 6, 8–9 (PTAB Feb. 13, 2019) (precedential) framework. *Id.* at 18–22.

In our Decision on Institution in IPR2020-01283, which is issuing concurrently with this Decision, we determine that Petitioner has not established a reasonable likelihood of showing that at least one of the claims challenged in that IPR is unpatentable, and thus, we do not institute *inter partes* review in that proceeding. Petitioner's challenge in this proceeding is similar to the challenge in IPR2019-00043, and suffers from the same deficiencies that warranted denial of institution in that proceeding. As discussed below, and, for substantially the same reasons as in IPR2019-00043, we determine that Petitioner has not established a reasonable likelihood of showing that at least one of the claims challenged in this proceeding is unpatentable, and thus, we do not institute *inter partes* review in this proceeding. Given that we do not institute *inter partes* review in this proceeding or in IPR2020-01283, we need not reach the issue of whether

more than one petition is necessary for Petitioner's challenges to the '117 patent, and/or whether to otherwise exercise discretion to deny institution of *inter partes* review under 35 U.S.C. § 314(a) or 35 U.S.C. § 325(d).

C. Level of Ordinary Skill in the Art

Petitioner asserts a person of ordinary skill in the art "would have had at least a bachelor's degree in electrical engineering, physics, optics or a related field, and approximately three years of experience with field of visual displays, circuit design, and related technologies." Pet. 21 (citing Ex. 1102 ¶¶ 19–20). Patent Owner does not propose a level of ordinary skill in the art or oppose Petitioner's proposed level of ordinary skill in the art. *See generally* Prelim. Resp.

Petitioner's proposed definition is unopposed and is consistent with the level of ordinary skill in the art reflected by the prior art of record. *See Okajima v. Bourdeau*, 261 F.3d 1350, 1355 (Fed. Cir. 2001) (explaining that specific findings regarding ordinary skill level are not required "where the prior art itself reflects an appropriate level and a need for testimony is not shown" (quoting *Litton Indus. Prods., Inc. v. Solid State Sys. Corp.*, 755 F.2d 158, 163 (Fed. Cir. 1985)). We, therefore, adopt Petitioner's level of ordinary skill in the art for purposes of this Decision.

D. Claim Construction

Because this *inter partes* review is based on a petition filed after November 13, 2018, we construe each claim "in accordance with the ordinary and customary meaning of such claim as understood by one of ordinary skill in the art and the prosecution history pertaining to the patent," the same standard used to construe the claim in a civil action. 37 C.F.R. § 42.100(b) (2019). "In determining the meaning of the disputed claim

limitation, we look principally to the intrinsic evidence of record, examining the claim language itself, the written description, and the prosecution history, if in evidence." *DePuy Spine, Inc. v. Medtronic Sofamor Danek, Inc.*, 469 F.3d 1005, 1014 (Fed. Cir. 2006) (citing *Phillips v. AWH Corp.*, 415 F.3d 1303, 1312–1317 (Fed. Cir. 2005) (en banc)). There is a "heavy presumption," however, that a claim term carries its ordinary and customary meaning. *CCS Fitness, Inc. v. Brunswick Corp.*, 288 F.3d 1359, 1366 (Fed. Cir. 2002). "[T]he ordinary and customary meaning of a claim term is the meaning that the term would have to a person of ordinary skill in the art in question at the time of the invention." *Phillips*, 415 F.3d at 1313.

Petitioner applies the following constructions, which were previously construed by the Eastern District of Texas and/or the Central District of California. Pet. 22–24.

Term	Construction
"a first input configured to receive a user signal indicative of a user selectable brightness setting" (claim 1)	"first input actually programmed or implemented with hardware or software to receive a user signal indicative of a user selectable brightness setting" (Ex. 1138, pp. 7–8)
"a multiplier configured to selectively generate a combined signal based on both the user signal and the sensing signal" (claim 1) / "selectively multiplying the input signal with a sense signal to generate a combined signal, wherein the sense signal indicates an ambient light level" (claim 15)	"combined signal includes, but is not necessarily limited to, the product of the user signal and the sensing signal" (Ex. 1137, p. 29) (Eastern District of Texas) "multiplier configured to" means the multiplier must be "actually programmed or implemented with hardware or software" (Ex. 1135, p. 12) (Central District of California)
"a dark level bias configured to	"dark level bias" means "a value

adjust the combined signal to generate a brightness control signal that is used to control a brightness level of a visible display" (claim 1) / "adjusting the combined signal with a dark level bias" (claim 15)	that causes a deviation from the combined signal, where the value is a voltage value of an electrical signal or value of a software variable" (Ex. 1135, p. 34) "a dark level bias actually programmed or implemented with hardware or software to adjust the combined signal to generate a brightness control signal that is used to control a brightness level of a visible display" (Ex. 1135, p. 34)
"approximately zero" (claims 1, 15)	"zero or a level close enough to zero that a light sensor would measure zero or a corresponding sending signal would round to zero" (Ex. 1135, p. 35)
"an overdrive clamp circuit coupled to the brightness control signal to limit its amplitude to a predefined range" (claim 6)	"to limit its amplitude to a predefined range" means "limit the absolute value of the brightness control signal's amplitude to be less than a predefined level" (Ex. 1137, p. 30)
"second input configured to receive a selection signal to selectively operate the brightness control circuit in an auto mode or a manual mode" (claim 9)	"second input actually programmed or implemented with hardware or software to receive a selection signal to selectively operate the brightness control circuit in an auto mode or a manual mode" (Ex. 1138, pp. 7–8)

Patent Owner's Preliminary Response "applies Petitioner's constructions." Prelim. Resp. 1.

At this stage in the proceeding, we need only construe the claims to the extent necessary to determine whether to institute *inter partes* review.

See Nidec Motor Corp. v. Zhongshan Broad Ocean Motor Co., 868 F.3d 1013, 1017 (Fed. Cir. 2017) (quoting *Vivid Techs., Inc. v. Am. Sci. & Eng'g, Inc.*, 200 F.3d 795, 803 (Fed. Cir. 1999))). After reviewing the parties' arguments and evidence, we determine that we do not need to expressly construe any term for purposes of this Decision.

E. Grounds 1 and 2: Anticipation and Obviousness Based on Oki

Petitioner contends claims 1, 2, 4, 5, 7, 15, 16, and 18 are unpatentable over Oki. Pet. 36–53. In support, Petitioner cites the Declaration of Ralph V. Wilhelm. Ex. 1102. For the reasons that follow, we are not persuaded that the evidence sufficiently supports Petitioner's arguments and, therefore, Petitioner does not establish a reasonable likelihood of prevailing with respect to these grounds at this stage of the proceeding.

1. Oki (Ex. 1103)

Oki was published on May 23, 2003. Ex. 1103, code (43). Oki is titled "Mobile terminal screen display control method and device" and generally relates to controlling a display screen of a mobile terminal "so as to adapt to the display characteristics of the terminal, the mental and physical characteristics of the user, and the use environment." *Id.* at code (54), (57). Different display modes use different settings for "the character size, the illumination, and the speed of display," and in particular, "an illuminance sensor is mounted to the mobile terminal . . . and the screen illuminance is automatically adjusted." *Id.* at code (57).

In an embodiment, a "display controller" includes a "central processing unit 1," as well as

a glare adjuster 10 that adjusts the luminance value, a display unit

> 3 that displays a screen on a liquid-crystal panel . . . , a display control unit 4 that controls the display to the display unit 3, and a photodiode 9 that has the function of sensing and outputting as an electrical signal the brightness surrounding the display unit 3.

Id. ¶ 26.

Figure 5 of Oki, reproduced below, shows the "display controller" embodiment that includes "glare adjuster 10."

[FIG. 5]

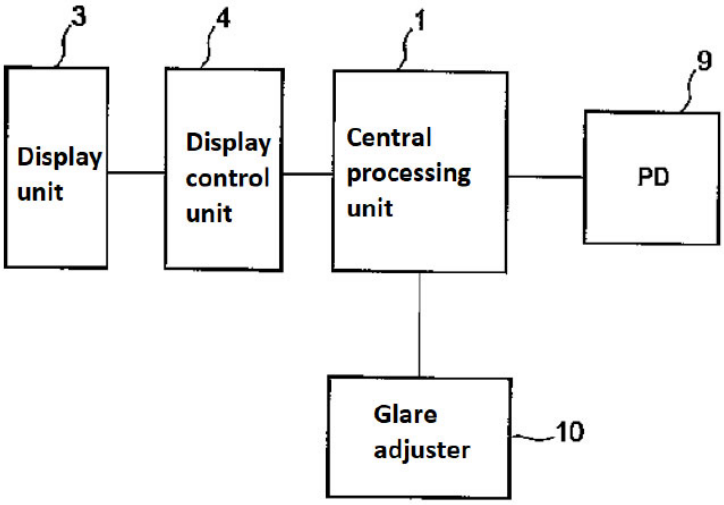

Figure 5 depicts a "display controller" according to an embodiment of Oki, including display unit 3, display control unit 4, central processing unit 1, photodiode 9, and glare adjustor 10. *Id.* ¶ 27. In operation, a user can input a "maximum used luminance value" and a "minimum used luminance value" into the "glare adjuster 10 to suit the user's own vision characteristics." *Id.*. The "glare adjuster 10" then calculates a display screen luminance value based on the output value of the "photodiode 9" and the maximum and minimum used luminance values input by the user. *See id.* ¶¶ 28–29. Specifically, "glare adjuster 10" calculates a luminance value "y" according to the equation "y = (b – a) x + a," where "a" is the "minimum

used luminance value," "b" is the "maximum used luminance value," and "x" is the photodiode output value. *Id.* ¶ 29. "Display control unit 4" then changes the luminance of "display unit 3" based on luminance value "y." *Id.*

Figure 6 of Oki is reproduced below.

[FIG. 6]

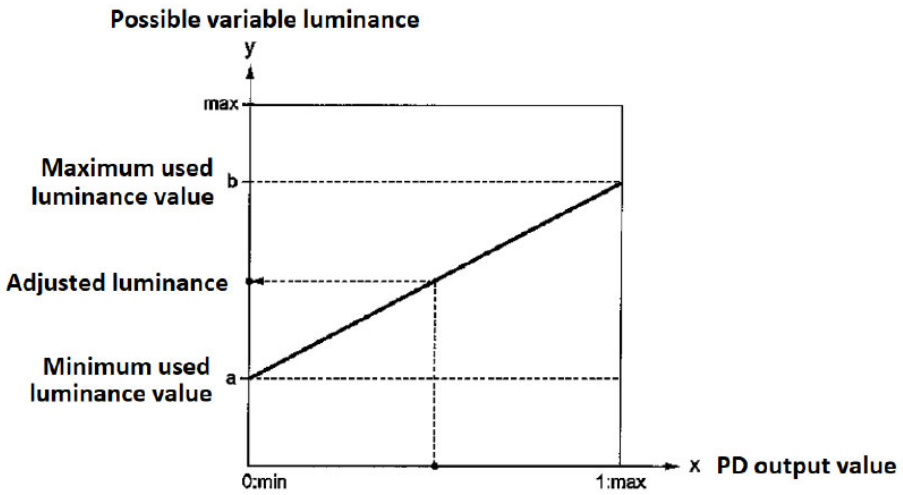

Figure 6 depicts a graph of the luminance value as a function of the photodiode output value, for given minimum and maximum used luminance values.

2. Independent Claims 1 and 15

Petitioner analyzes Grounds 1 (anticipation) and 2 (obviousness) together, and identifies the disclosures in Oki that it contends teach the limitations in independent claims 1 and 15. *See* Pet. 36–53.

Limitation 1[A] recites "a first input configured to receive a user signal indicative of a user selectable brightness setting." Ex. 1001, 12:30–31. Claim 15 recites a similar limitation. *Id.* at 13:36–37. Petitioner contends Oki discloses this limitation. Pet. 40–43. Petitioner contends that

Oki "allows the user to select the maximum used luminance value and/or the minimum used luminance value 'to suit the user's own vision characteristics.'" *Id.* at 39. More specifically, with respect to the "user signal," Petitioner contends "[a] user signal represents each of [the minimum used luminance value and the maximum used luminance value] settings in Oki's system, as indicated by the variables '*a*' and '*b*.'" Pet. 40; *see also id.* at 42–43 ("signals reflecting '*a*' and '*b*' indicate the user's minimum and maximum brightness settings as input into the glare adjustor," "signals representing the variables '*a*,' '*b*,' and '*x*'," and "Oki's system is designed to perform calculations for '*y*' based on values associated with the user's chosen minimum and/or maximum luminance values").

Limitation 1[C] recites "a multiplier configured to selectively generate a combined signal based on both the user signal and the sensing signal." Ex. 1001, 12:35–37. Claim 15 recites a similar limitation. *Id.* at 14:1–3. Petitioner contends Oki discloses this limitation. Pet. 44–46. In particular, Petitioner contends that "[t]he 'combined signal' generated by multiplication is the term '$(b - a)x$' in the following expression: $y = (b - a)x + a$." *Id.* at 44. Petitioner contends "a 'user signal' includes signals representing user selected brightness settings '*a*' and/or '*b*' and '*x*' is a sensing signal from photodiode." *Id.* (citing Ex. 1102 ¶ 102).

Limitation 1[D] recites "a dark level bias configured to adjust the combined signal to generate a brightness control signal that is used to control a brightness level of a visible display such that the brightness control signal is maintained above a pre-determined level when the ambient light level decreases to approximately zero." Ex. 1001, 12:38–43. Claim 15 recites a similar limitation. *Id.* at 14:4–9. Petitioner contends Oki discloses

this limitation. Pet. 46–49. In particular, Petitioner contends that "[i]n Oki's equation $y = (b - a)\,x + a$, the added variable '*a*' is a dark level bias." *Id.* at 46. Petitioner contends that "*a* is used to adjust the combined signal to generate a brightness control signal 'y' for all PD output values between 'a' and 'b.'" *Id.* Petitioner contends that "Oki's variable '*a*' is a value that causes a deviation from the combined signal (*i.e.*, the signal resulting from the product of $(b - a)$ and x) through the addition of '*a*.'" *Id.* at 47 (citing Ex. 1103 ¶ 29; Ex. 1102 ¶ 106). Petitioner contends that at the "sensed ambient light level of approximately zero, Oki's display has a minimum brightness of '*a*,' which is above predetermined values of less than '*a*,' which can be seen using Oki's equation because '*x*' drops to zero, resulting in the first term dropping to zero, simplifying the expression to "+*a*." *Id.* at 49 (citing Ex. 1103, Fig. 3; Ex. 1102 ¶ 106).

Patent Owner argues, among other things, that Petitioner has not sufficiently shown that Oki teaches limitations 1[A] and 1[D] because: (1) Petitioner improperly relies on the minimum used luminance value "a" to teach both a 'user [input] signal,' and a 'dark level bias.'"; and (2) Petitioner does not explain how "*a*" can be both a "signal" and a "value." Prelim. Resp. 38–39, 50, 54–66. Patent Owner contends that the "user [input] signal," and "dark level bias," are separate claim limitations that are distinct and cannot be the same structure. *Id.* at 55–59. Patent Owner also identifies certain portions of and Figures in the Specification of the '117 patent, as well as dependent claims 2–4, to support its arguments that these are distinct elements. *Id.* at 59–63.

We focus our analysis on those claim limitations that are dispositive for purposes of this Decision. On the record before us, we determine that

Petitioner has not shown a reasonable likelihood of prevailing in demonstrating that Oki discloses limitations 1[A] and 1[D], and, accordingly, has not shown a reasonable likelihood it will prevail in demonstrating that Oki anticipates or renders obvious claims 1 and 15. We agree with Patent Owner that Petitioner improperly relies on Oki's minimum luminance value "*a*" to disclose both the "user [input] signal" and the "dark level bias."[1]

"Where a claim lists elements separately, 'the clear implication of the claim language' is that those elements are 'distinct component[s]' of the patented invention." *Becton, Dickinson & Co. v. Tyco Healthcare Grp., LP*, 616 F.3d 1249, 1254 (Fed. Cir. 2010) (alteration in original) (quoting *Gaus v. Conair Corp.*, 363 F.3d 1284, 1288 (Fed. Cir. 2004)); *HTC Corp. v. Cellular Commc'n. Equip. LLC*, 701 F. App'x. 978, 982 (Fed. Cir. 2017) ("The separate naming of two structures in the claim strongly implies that the named entities are not one and the same structure.").

Claims 1 and 15 recite the "user [input] signal" and the "dark level bias" as separate and distinct elements of the claimed "brightness control circuit" and method. Claim 1 recites "a first input configured to *receive a user signal* indicative of a user selectable brightness setting," with "a multiplier configured to selectively *generate a combined signal based on both the user signal and the sensing signal*," and "a *dark level bias*

[1] To the extent Petitioner contends that a signal "reflecting" or "representing" "*a*" is different from + *a* as used in Oki's equation, we reject that argument. The "*a*" in Oki's equation is the same, whether in the first part of the equation, *(b – a) x*, which Petitioner relies on to teach the "combined signal," or the second part of the equation, + *a*, which Petitioner relies on to teach the "dark level bias." Pet. 44, 46.

configured to adjust the combined signal to generate a brightness control signal . . ." Ex. 1001, 12:30–43. Claim 15 recites similar limitations in method form. *Id.* at 13:36–14:9. In other words, the dark level bias adjusts a combined signal that is generated based on the user signal and the sensing signal.

The Specification of the '117 patent supports that the "user [input] signal" is a distinct, separately identifiable element from the "dark level bias." For example, as Patent Owner explains, the equations accompanying Figures 4, 8, and 9 of the Specification show these as separate elements. *See* Prelim. Resp. 59–61. Patent Owner provides an annotated version of Figure 4 and its accompanying equation, set forth below:

FIG. 4

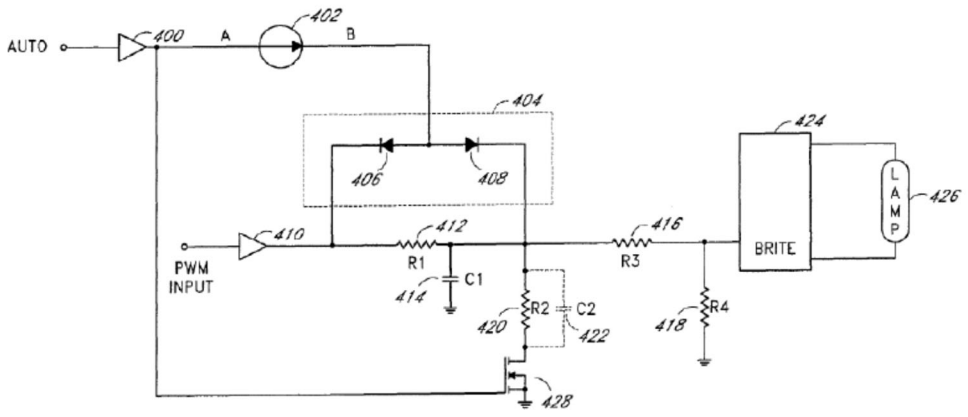

User Signal

Dark Level Bias

$$BCS1 = \boxed{dutycycle} \times \left[\left(\frac{VCC \times R2 \times R4}{[(R1+R2)\times(R3+R4)]+(R1\times R2)}\right) + \left(\frac{\boxed{ISRC} \times R1 \times R2 \times R4}{[(R1+R2)\times(R3+R4)]+(R1\times R2)}\right)\right]$$

Sensing Signal

Id. at 59. Figure 4 depicts a schematic diagram of one embodiment of a brightness control circuit with a multiplier circuit to combine a light sensor output with a user adjustable PWM logic signal. Ex. 1001, 4:23–25. Patent Owner's annotated version of the equations of Figure 4 highlight the user signal in red, the dark level bias in green, and the sensing signal in blue. Prelim. Resp. 59. In reference to Figure 4 and its equations, the Specification explains:

> *The term "dutycycle" corresponds to the duty cycle of the user adjustable PWM logic signal.* The term "VCC" corresponds to the logic high output from the input buffer circuit 410. The term "ISRC" corresponds to the sensor current signal. *The first major term within the brackets corresponds to a scaled dark bias level of the brightness control signal in total ambient darkness.* The second major term within the brackets introduces the effect of the visible light sensor 402. *The network of resistors 412,420 416, 418 helps to provide the dark bias level and to scale the product of the sensor current signal and the user adjustable PWM logic signal.*

Ex. 1001, at 7:25–35 (emphasis added).

Patent Owner provides similar support and annotations for Figures 8 and 9, which likewise support that the "user [input] signal" and "dark level bias" are distinct components. Prelim. Resp. 60–61.

Similarly, Figures 1 and 2 distinguish between the user input (DIMMING CONTROL) and the dark level bias. Figure 2 depicts an

embodiment of a brightness control circuit with ambient light correction and is reproduced below. Ex. 1001, 4:19–20.

FIG. 2

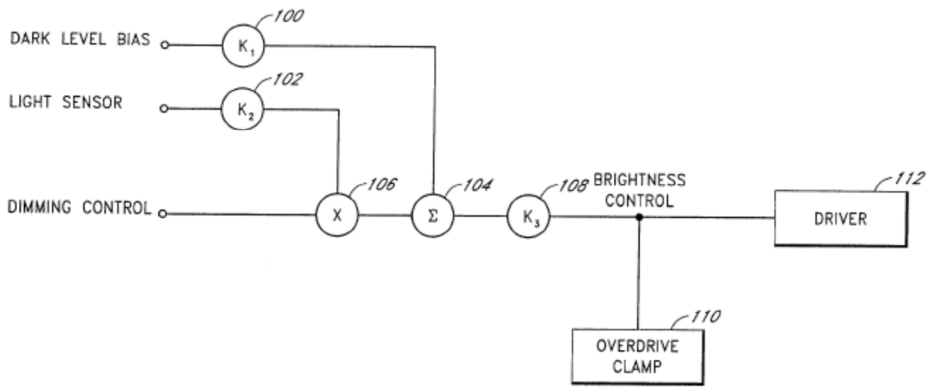

The Specification states:

> FIG. 2 is a block diagram of another embodiment of a brightness control circuit with ambient light correction. A light sensor output (LIGHT SENSOR) is adjusted by a scalar circuit (k2) 102 and then provided to a multiplier circuit 106. *A user input (DIMMING CONTROL) is also provided to the multiplier circuit 106.* The multiplier circuit 106 outputs a signal that is the product of the user input and Scaled light sensor output. *A Summing circuit 104 adds the product to a dark level bias (DARK LEVEL BIAS) that has been adjusted by scalar circuit (k1) 100.* An output of the summing circuit 104 is adjusted by scalar circuit (k3) 108 to generate a bright ness control signal (BRIGHTNESS CONTROL) for a display driver 112.

Ex. 1001, 5:15–27 (emphasis added). The Specification goes on to state that "In FIG. 2, the scaled dark level bias is added to the output of the multiplier circuit 106 to provide the predefined level of brightness in this case. *This feature may be desired to prevent a user from using the brightness control*

circuit to turn off a visual information display system." *Id.* at 5:38–43 (emphasis added).

The Specification does not indicate that the "user [input] signal" and the "dark level bias" may be the same thing. In addition, Petitioner does not offer evidence or argument suggesting that the general presumption that these different terms have different meanings would not apply to the claim terms "user [input] signal" and "dark level bias." Even Petitioner's own description of the '117 patent, including Figures 2, 4, 8, and 8, describe the "user signal" and "dark level bias" as distinct components. *See* Pet. 3–8. Similarly, the constructions submitted by Petitioner for the claim limitations also indicate that these are distinct components. *See Id.* at 22–23.

Further, dependent claim 3, which recites "wherein the multiplier multiplies a sum of the *user signal* and the sensing signal by the *dark level bias* to generate an output signal corresponding to the brightness control signal," likewise supports that the user signal and dark level bias are distinct components. Ex. 1001, 12:48–51. Additionally, with reference to Figure 3, the '117 patent states "[t]he brightness control signal near zero lux is a function of a dark bias level and also depends on the user setting." *Id.* at 6:9–11. In other words, dark level bias and user setting (or input) are distinct components.

Thus, we determine that the claim language, figures, and written description of the '117 patent demonstrate that the "user [input] signal" and "dark level bias" are separate components. Petitioner has not provided any explanation or argument as to why these separate claim elements can be satisfied by minimum luminance "*a*" in Oki. Therefore, Petitioner has not provided sufficient explanation or argument as to its reliance on Oki's

minimum luminance "*a*," as disclosing two separate and distinct claim elements, i.e., the "user [input] signal" and the "dark level bias."

Moreover, in so relying, Petitioner's contentions lack sufficient explanation and consistency in other ways. For example, as discussed above, Petitioner asserts "[a] user signal represents each of [the minimum used luminance value and the maximum used luminance value] settings in Oki's system, as indicated by the variables '*a*' and '*b*.'" Pet. 40. For the dark level bias, Petitioner's proposed construction recites that "dark level bias" means "a value that causes a deviation from the combined signal, where the value is a voltage value of an electrical signal or value of a software variable." *Id.* at 23. Petitioner does not sufficiently explain how minimum luminance value "*a*" can be both a user signal representing a setting in Oki's system, and "a value that causes a deviation from the combined signal, where the value is a voltage value of an electrical signal or value of a software variable."

Petitioner thus fails to meet the burden required to support institution of *inter partes* review of independent claims 1 and 15, and, for the same reasons, dependent claims 2, 4, 5, 7, 16, and 18, based on anticipation or obviousness over Oki. *Harmonic*, 815 F.3d at 1363 (quoting 35 U.S.C. § 312(a)(3) (requiring *inter partes* review petitions to identify "with particularity . . . the evidence that supports the grounds for the challenge to each claim") (internal quotations omitted)); *cf. Intelligent Bio-Systems*, 821 F.3d at 1369 (quoting 35 U.S.C. § 312(a)(3)) (addressing "the requirement that the initial petition identify 'with particularity' the 'evidence that supports the grounds for the challenge to each claim'"). Accordingly, Petitioner fails to demonstrate a reasonable likelihood that it would prevail

on these grounds of unpatentability.

F. Grounds 3 and 4: Obviousness Over Oki and Henry and Oki and Toffolo

Petitioner contends that claim 6 would have been unpatentable over Oki and Henry (Ground 3), and claim 9 would have been unpatentable over Oki and Toffolo (Ground 4). For the same reasons as set forth above for Grounds 1 and 2, Petitioner fails to demonstrate a reasonable likelihood that it would prevail on this ground of unpatentability.

IV. CONCLUSION

After considering the evidence and arguments presented in the Petition and Preliminary Response, we determine that Petitioner has not established a reasonable likelihood of prevailing on its assertion that at least one claim of the ’117 patent is unpatentable. Accordingly, we do not institute an *inter partes* review of the challenged claims on the grounds set forth in the Petition.

V. ORDER

In consideration of the foregoing, it is hereby

ORDERED that *inter partes* review is not instituted for any claim of the ’117 patent.

FOR PETITIONER:

Andrew R. Sommer
Vivian S. Kuo
GREENBERG TRAURIG, LLP
sommera@gtlaw.com
kuov@gtlaw.com

Matias Ferrario
Jonathan Lewis
KILPATRICK TOWNSEND & STOCKTON LLP
mferrario@kilpatricktownsend.com
jvlewis@kilpatricktownsend.com

FOR PATENT OWNER:

Russell Tonkovich
FEINBERG DAY KRAMER ALBERTI LIM
TONKOVICH & BELLOLI LLP
rtonkovich@feinday.com

Bridget A. Smith
LOWENSTEIN & WEATHERWAX LLP
smith@lowensteinweatherwax.com