Trials@uspto.gov
571-272-7822

Paper 37
Date: February 16, 2022

UNITED STATES PATENT AND TRADEMARK OFFICE

BEFORE THE PATENT TRIAL AND APPEAL BOARD

W-W MANUFACTURING CO., INC.,
Petitioner,

v.

JAGER PRO, INC.,
Patent Owner.

IPR2020-01470
Patent 9,814,228 B2

Before SCOTT A. DANIELS, BART A. GERSTENBLITH, and FREDERICK C. LANEY, *Administrative Patent Judges*.

GERSTENBLITH, *Administrative Patent Judge*.

JUDGMENT
Final Written Decision
Determining All Challenged Claims Unpatentable
35 U.S.C. § 318(a)

I. INTRODUCTION

A. Background

W-W Manufacturing Co., Inc. ("Petitioner") filed a petition for *inter partes* review of claims 1–28 ("the Challenged Claims") of U.S. Patent No. 9,814,228 B2 (Ex. 1001, "the '228 patent"). Paper 1 ("Pet."). Jager Pro, Inc. ("Patent Owner") filed a Preliminary Response (Paper 12 ("Prelim. Resp.")). Applying the standard set forth in 35 U.S.C. § 314(a), we instituted an *inter partes* review of the Challenged Claims on all grounds set forth in the Petition. Paper 13 ("Inst. Dec.").

After institution, Patent Owner filed a Patent Owner Response. Paper 19 ("PO Resp."). Petitioner filed a Reply to Patent Owner's Response (Paper 22, "Pet. Reply"), and Patent Owner filed a Sur-reply (Paper 24, "Sur-reply"). An oral hearing was held on November 18, 2021, and a copy of the transcript was entered in the record.[1] Paper 36 ("Tr.").[2]

We have jurisdiction pursuant to 35 U.S.C. § 6. This Decision is a Final Written Decision under 35 U.S.C. § 318(a) (2018) and 37 C.F.R. § 42.73 (2020) as to the patentability of the claims on which we instituted trial. Petitioner bears the burden of proving unpatentability of the

---

[1] A combined oral hearing was held for this proceeding and related proceeding IPR2020-01471.

[2] Petitioner served and then filed, at our request, a list of objections to Patent Owner's demonstrative exhibits. Paper 34; *see* Tr. 6:3–26 (discussing Petitioner's objections). As we explained at the oral hearing, "although the demonstratives are a useful aide during the oral hearing, we do not rely on them when rendering a final written decision. We rely on the arguments raised in the briefing and the evidence submitted in each case." Tr. 6:11–15. Thus, we have noted Petitioner's objections, but we dismiss them as moot because demonstrative exhibits are not evidence and we do not rely on them in rendering this Final Written Decision.

Challenged Claims. *Dynamic Drinkware, LLC v. Nat'l Graphics, Inc.*, 800 F.3d 1375, 1378 (Fed. Cir. 2015). To prevail, Petitioner must prove unpatentability by a preponderance of the evidence. *See* 35 U.S.C. § 316(e); 37 C.F.R. § 42.1(d). Having reviewed the arguments and the supporting evidence, we determine that Petitioner has shown, by a preponderance of the evidence, that the Challenged Claims of the '228 patent are unpatentable.

B. Related Proceedings

The parties identify the following related matters: *Jager Pro Inc. v. Tusk Innovations Inc.*, No. 4:19-cv-00108 (E.D. Ark.); *Jager Pro Inc. v. Bull Creek Welding and Fabrication Inc.*, No. 4:19-cv-00107 (E.D. Ark.) ("the Bull Creek litigation"); *Jager Pro Inc. v. Backwoods Sols., LLC*, No. 1:20-cv-00017 (N.D. Miss.); and *Jager Pro Inc. v. W-W Mfg. Co.*, No. 5:20-cv-00095 (W.D. Okla.). Pet. 2; Paper 5 (Patent Owner's Mandatory Notices), 2. In addition, Petitioner challenges claims of related U.S. Patent No. 10,098,339 ("the '339 patent") in IPR2020-01471. Pet. 2. Petitioner also identifies the following related patents or patent applications that may affect or be affected by this proceeding: U.S. Patent No. 9,101,126 ("the '126 patent"), and U.S. Patent Application Publication Nos. 16/122,384 and 16/732,947. Pet. 2.

C. Real Parties in Interest

Petitioner identifies W-W Manufacturing Co., Inc.; WW Capital Corporation; Noble Research Institute, LLC; and The Samuel Roberts Noble Foundation as the real parties in interest. Pet. 1. Patent Owner identifies Jager Pro, Inc. as the real party in interest. Paper 5, 2.

D. The Instituted Grounds of Unpatentability and Declaration Evidence

Petitioner asserts the following grounds of unpatentability (Pet. 16–68):

Claim(s) Challenged	35 U.S.C. §[3]	Reference(s)/Basis
1–3, 13–17, 26, 27	103(a)	TB1,[4] TB2,[5] Jeong,[6] optionally Vorhies[7]
4–9, 18–20, 24, 25	103(a)	TB1, TB2, Jeong, optionally Vorhies, Silsby[8]
10, 11, 21, 22, 28	103(a)	TB1, TB2, Jeong, optionally Vorhies, Kimura[9]
12, 23[10]	103(a)	TB1, TB2, Jeong, optionally Vorhies, Kimura, optionally Silsby

[3] The Leahy-Smith America Invents Act ("AIA") included revisions to 35 U.S.C. § 103 that became effective on March 16, 2013. Because the '228 patent has an effective filing date before March 16, 2013, we apply the pre-AIA versions of the statutory bases for unpatentability.
[4] Archived copy of a page from TexasBoars's website (https://texasboars.com/) (Ex. 1003, "TB1").
[5] Copy of presentation from TexasBoars's website (Ex. 1004, "TB2").
[6] Certified, English-language translation of Korean Patent Registration No. 10-0688243, filed Mar. 7, 2006, published Mar. 2, 2007 (Ex. 1005, "Jeong"). Exhibit 1005 also includes a declaration of the translator and a copy of the original Korean-language document. We refer to the English-language translation.
[7] U.S. Patent Application Publication No. 2005/0097808 A1, published May 12, 2005 (Ex. 1006, "Vorhies").
[8] U.S. Patent Application Publication No. 2006/0203101 A1, published Sept. 14, 2006 (Ex. 1007, "Silsby").
[9] Certified, English-language translation of Japanese Patent Application Publication No. JP 2004-97019 A, published Apr. 2, 2004 (Ex. 1008, "Kimura"). Exhibit 1008 also includes a declaration of the translator and a copy of the original Japanese-language document. We refer to the English-language translation.
[10] The listing of grounds in the Institution Decision contained an error in that it did not include Ground 4. The Petition includes this ground (*see* Pet. 64–

Petitioner supports its challenge with a Declaration of Stephen S. Ditchkoff, Ph.D. (Ex. 1002), a Declaration of Catherine N. Taylor (Ex. 1014), and an Affidavit of Christopher Butler (Ex. 1015). Patent Owner supports its arguments with a Declaration of Steven M. Nesbit, Ph.D. (Ex. 2002).

E. The '228 Patent

The '228 patent is titled "Systems and Methods for Animal Trapping." Ex. 1001, code (54). The '228 patent describes that "[c]onventional gates on trap enclosures are typically designed to be triggered and closed when an animal enters into the trap enclosure, or is otherwise sensed inside the trap enclosure" but such a method of triggering a gate "often produces low volume capture numbers and future trap avoidance by non-captured animals." *Id.* at 1:28–34. The patent identifies "a need in the art for trap enclosures and methods for trapping animals that provide high-volume capture of nuisance animals." *Id.* at 1:35–37. The '228 patent discloses a trap with a gate that can be remotely, selectively triggered to close when a desired condition has been met. *Id.* at 1:48–52.

---

66), Patent Owner's Response identifies this ground as one that is included in the instituted *inter partes* review, and the Institution Decision expressly institutes "all of the grounds identified in the Petition," which includes Ground 4. Accordingly, we find the error in the chart to be harmless.

Figures 1 and 2 of the ’228 patent are reproduced below:

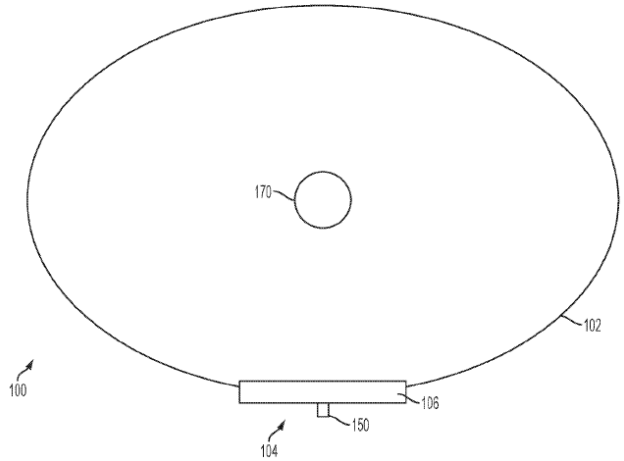

FIG. 1

Figure 1 is a top plan view of an exemplary trap. Ex. 1001, 2:18–19.

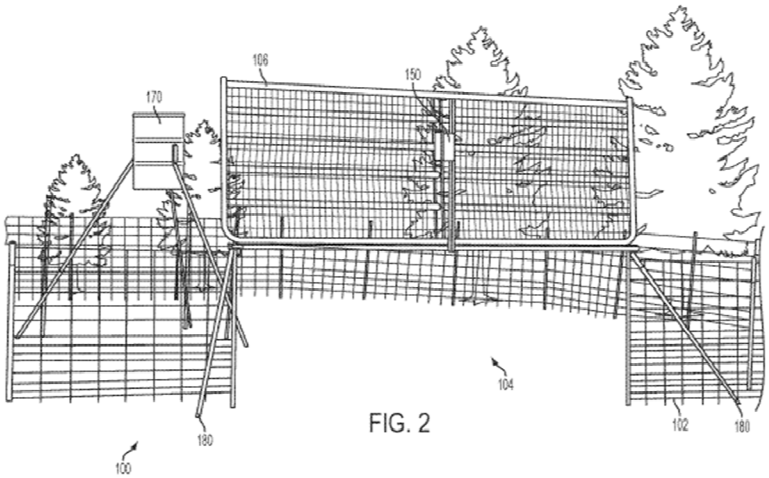

FIG. 2

Figure 2 is an exemplary trap with gate 106[11] in an open position. *Id.* at 2:20–21. As shown in Figures 1 and 2, trap 100 includes enclosure 102, having at least one opening 104, through which a plurality of animals can pass, and gate 106, positioned in the opening of enclosure 104. *Id.* at 3:29–

[11] The ’228 patent refers to numeral 106 as showing a “door or gate” and states that “[t]he terms ‘door’ and ‘gate’ are used interchangeably herein.” Ex. 1001, 3:63, 3:65–66. We refer to “gate 106” for ease of reference.

36, 3:63–64. Gate 106 is supported by a support frame on hinges that allows the gate to pivot from an open position to a closed position. *Id.* at 3:66–4:1, 4:59–65.

The ’228 patent describes using a transmitter and remote control mechanism “for remotely triggering the gate.” Ex. 1001, 4:10–12. The ’228 patent explains that “[t]he transmitter can be configured to transmit a signal and the remote control mechanism can be configured to receive the signal from the transmitter.” *Id.* at 4:12–14. A portion of the remote control mechanism can be housed in housing 150, as shown in Figures 3 and 4, reproduced below:

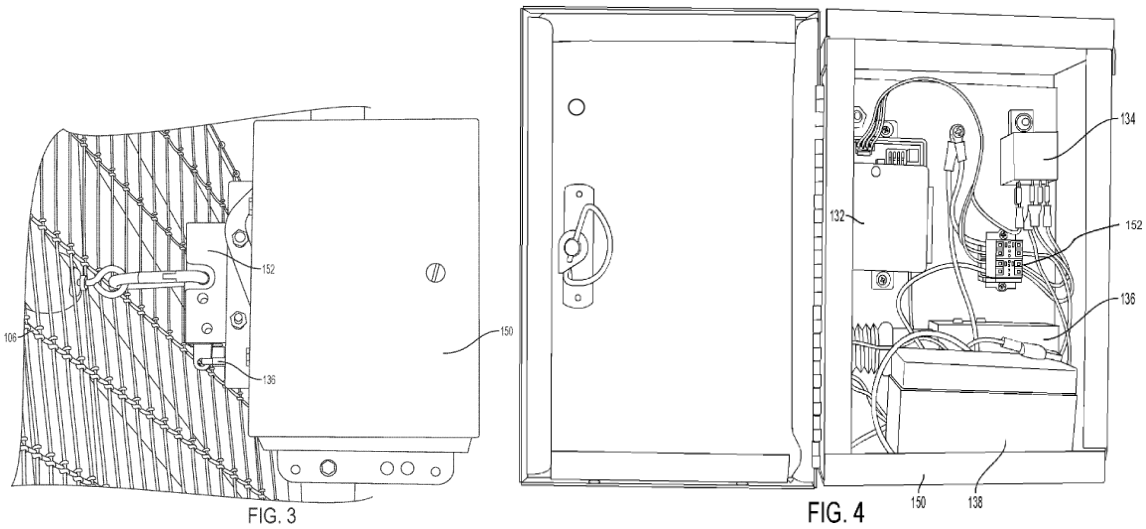

Figure 3 “illustrates a housing and gate release mechanism in use on a trap” (*id.* at 2:22–23), and Figure 4 is a “front internal view of a housing and gate release mechanism of a trap” (*id.* at 2:24–26). Figures 3 and 4 show housing 150 and gate release mechanism 152 operatively coupled to solenoid 136. *Id.* at 4:49–51. Gate release mechanism 152 “can be a latch, an arm, a hook, a catch, and the like.” *Id.* at 4:55–57.

Figure 9 of the ’228 patent is reproduced below:

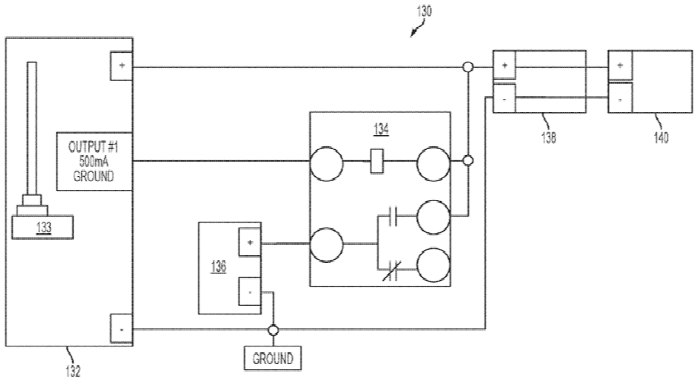

FIG. 9

Figure 9 “is a schematic diagram of exemplary means for remotely triggering a gate of a trap.” Ex. 1001, 2:35–36. In particular, Figure 9 shows remote control mechanism 130, which includes receiver 132 (to receive the signal from the transmitter, e.g., wirelessly via antenna 133), relay 134 electrically coupled to receiver 132, solenoid 136, battery 138, and solar charger 140. *Id.* at 4:18–28. The ’228 patent explains that, in operation, when receiver 132 receives a signal from the transmitter, the receiver activates an output signal, which is received by relay 134, causing the relay to close. *Id.* at 5:17–23. When the relay closes, a signal is sent to solenoid 136, which can trigger gate release mechanism 152 to move the gate from an open position to a closed position. *Id.* at 5:23–25.

The ’228 patent provides that the trap “can also comprise means for detecting the presence of at least one animal therein the enclosure.” Ex. 1001, 5:66–67. The ’228 patent discloses examples “not meant to be limiting,” including “a camera” that “can be provided in the enclosure, or near the enclosure, and can be configured to record or sense the presence of the at least one animal therein the enclosure.” *Id.* at 5:67–6:4. Examples of such cameras include (1) “a closed-circuit device or internet protocol (IP)

web camera intended to continuously broadcast a transmission to a closed circuit television or other monitoring device, such as, for example, an IP web camera network" (*id.* at 6:4–8); (2) "an infrared camera, configured to record the thermal image of the at least one animal therein the enclosure" (*id.* at 6:8–11); and (3) "a night vision camera configured to record the image of the at least one animal therein the enclosure" (*id.* at 6:11–13). These "exemplary means for detecting the presence of the at least one animal can be configured to record still or moving images to any suitable computer-readable medium." *Id.* at 6:13–16. And, "the means for detecting the presence of the at least one animal can be configured to transmit the recorded images to a remote display device, such as a monitor" or "a wireless handheld device, such as a cellular telephone." *Id.* at 6:19–22, 6:39–42.

Additionally, the '228 patent explains that "the means for detecting the presence of the at least one animal can be configured or otherwise programmed to automatically trigger the gate when a predetermined condition has been met." Ex. 1001, 6:49–52. "[T]he predetermined condition can be a certain date and/or time, a predetermined level of food remaining in a food dispensing mechanism . . . , [or] a predetermined number of animals detected in the enclosure by the camera or a local person, and the like." *Id.* at 6:52–57. The '228 patent further provides details regarding a food dispensing mechanism configured to provide food to at least one animal in the enclosure, including positioning the food dispensing mechanism such that it is centrally within the enclosure or at any location within the enclosure to lure animals into the enclosure. *Id.* at 6:58–7:1.

F. Illustrative Claim

Claims 1, 14, and 28 are the independent claims challenged in this proceeding. Claims 2–13 depend, directly or indirectly, from claim 1 and claims 15–27 depend directly from claim 14. Claim 1 is illustrative of the claimed subject matter and is reproduced below with Petitioner's bracketing added for reference:

> 1. [pre] A method for capturing a plurality of feral pigs, comprising:
>
> [a] moving at least one portion of an enclosure from an open position that permits passage of a plurality of feral pigs into the enclosure to a closed position that restricts passage of the plurality of feral pigs out of the enclosure, [b] wherein in the closed position, the enclosure cooperates with a ground surface to define an enclosure area in which the plurality of feral pigs are trapped, [c] and wherein the ground surface extends continuously from within the enclosure area to areas surrounding the enclosure,
>
> [d] wherein the enclosure comprises a release mechanism that effects movement of the at least one portion of the enclosure from the open position to the closed position,
>
> [e] wherein the release mechanism effects movement of the at least one portion of the enclosure from the open position to the closed position upon receipt of a release signal from a control mechanism that is in communication with a display device, [f] wherein the display device is in communication with a camera assembly and configured to:
>
> receive a wireless detection signal from the camera assembly; and
>
> [g] transmit a wireless control signal upon receipt of the wireless detection signal from the camera assembly, wherein the wireless control signal corresponds to an instruction to the control mechanism to generate the release signal, and

> [h] wherein, upon detection of a presence of the plurality of feral pigs within the enclosure by the camera assembly, the camera assembly transmits the wireless detection signal to the display device.

Ex. 1001, 7:50–8:16.

G. Level of Ordinary Skill in the Art

1. Discussion

The level of skill in the art is "a prism or lens" through which we view the prior art and the claimed invention. *Okajima v. Bourdeau*, 261 F.3d 1350, 1355 (Fed. Cir. 2001). The person of ordinary skill in the art is a hypothetical person presumed to have known the relevant art at the time of the invention. *In re GPAC Inc.*, 57 F.3d 1573, 1579 (Fed. Cir. 1995). In determining the level of ordinary skill in the art, we may consider certain factors, including the "type of problems encountered in the art; prior art solutions to those problems; rapidity with which innovations are made; sophistication of the technology; and educational level of active workers in the field." *Id.* (internal quotation marks omitted). "In a given case, every factor may not be present, and one or more factors may predominate." *Id.*

Petitioner, supported by Dr. Ditchkoff's testimony, proposes that a person of ordinary skill in the art at the time of the invention would have had "at least a B.S. in the study of wildlife management, or wildlife ecology, that includes study of the use of trapping as a wildlife management tool" and "at least 2 years of experience in the construction and use of wild animal traps." Pet. 7 (citing Ex. 1002 ¶¶ 21–23).

Petitioner acknowledges that in the Bull Creek litigation, involving the '228 patent, the district court adopted the following level of ordinary skill in the art, which the parties in that case jointly proposed to the court:

"at least a bachelor's degree in mechanical, industrial, or civil engineering" and "some experience dealing with wireless communications systems and monitoring devices – such as digital, infrared, low-light, and motion-sensing cameras." Pet. 7–8 (citing Ex. 1017).[12] Petitioner disagrees with this definition, arguing that the claims of the '228 patent are written "at a very high conceptual level" and "the claimed method steps and components related thereto were very well known at the time of the alleged invention, including even to laypeople" and, thus, "[n]o specialized engineering knowledge is necessary." *Id.* at 8. Petitioner also argues that a person having ordinary skill in the art "would not need either 'at least a bachelor's degree in mechanical, industrial, or civil engineering,' or 'some experience dealing with wireless communications systems and monitoring devices – such as digital, infrared, low-light, and motion-sensing cameras.'" *Id.* (citing Ex. 1002 ¶¶ 24–25).

In its Preliminary Response, Patent Owner disagreed with Petitioner's proposed level of ordinary skill and, instead, advocated that we adopt the same definition accepted by the district court in the Bull Creek litigation. Prelim. Resp. 10–11. Patent Owner argued that the definition is appropriate because the invention in the '228 patent "is a complex system involving the interaction of wireless communications, signal processing, and control systems, as well as devices that are actually able to physically trap animals."

[12] Exhibit 1017 is an order, dated July 16, 2020, from *Jager Pro Inc. v. Bull Creek Welding and Fabrication, Inc.*, No. 4:19-cv-00107 (E.D. Ark.), in which the court modified its definition of the person having ordinary skill in the art to adopt the level of skill in the art agreed upon by the parties in that case. Petitioner, however, is not a party in that case.

Id. at 11. Therefore, according to Patent Owner, a person of ordinary skill in the art would require some background in engineering. *See id.*

In the Institution Decision, based on the preliminary record, we found that a person of ordinary skill in the art would have "a bachelor's degree in mechanical, industrial, or civil engineering and would have some experience dealing with wireless communications systems and monitoring devices." Inst. Dec. 12. We also found that "at least two years of experience in the construction and use of wildlife traps would be a suitable substitute for a formal engineering degree in this art." *Id.* Thus, our preliminary finding contemplates two alternatives: (1) a bachelor's degree as noted *and* some experience dealing with wireless communications systems and monitoring devices or (2) some experience dealing with wireless communications systems and monitoring devices and at least two years of experience in the construction and use of wildlife traps.[13] As reflected above, our finding on the preliminary record at the time was somewhat of a combination of both parties' proposed levels of skill.

In the briefing following institution, the parties continued to advocate for similar levels of ordinary skill in the art they first put forth in this proceeding. *See* PO Resp. 7–9 (setting forth the same level of ordinary skill in the art as that presented in the Preliminary Response); Pet. Reply 1–2 (contesting Patent Owner's proposal); PO Sur-reply 2–4 (asserting that experience with wildlife traps in the relevant time period would not substitute for the technical education or experience). Patent Owner's Sur-

[13] The "suitable substitute" we identified was the experience in construction and use of wildlife traps for the formal engineering degree. The substitute did not replace the experience dealing with wireless communications systems and monitoring devices.

reply slightly expands upon its original proposal, however, by asserting that "[t]he proper level of skill is at least a bachelor's degree in mechanical, industrial, or civil engineering, *or equivalent experience*" in addition to some experience dealing with wireless communications systems and monitoring devices. PO Sur-reply 2 (emphasis added).

At the oral hearing, we explained our understanding of the level of skill in the art preliminarily adopted in the Institution Decision, which is the same as we have set forth above. Tr. 72:11–26. In response to that explanation, counsel for Patent Owner stated that it has no disagreement with our preliminary finding. *Id.* at 73:15–19. Petitioner's disagreement with Patent Owner's proposal (and apparently our preliminary construction[14]) resides in the lack of a requirement of "familiarity . . . with wildlife behavior, animal trap design or trap functionality, which are important considerations in the design of any trap." Pet. Reply 1. We recognize that the '228 patent and nearly all of the prior art references are directed to animal traps and we agree with Petitioner that some experience with animal trap design would have been likely. Nonetheless, the mechanics of the traps are engineering or experience-based. In other words, we find that the level of ordinary skill in the art with respect to the trap mechanics themselves could be gained through an engineering degree or experience in the construction and use of wildlife traps, as we set forth preliminarily in the

[14] Petitioner directs its argument to Patent Owner's proposed level of ordinary skill in the art as opposed to the level of ordinary skill in the art we preliminarily adopted in the Institution Decision. *See* Pet. Reply 1–2. We understand Petitioner's argument to apply to our preliminary finding as well because we do not expressly require experience in wildlife behavior or trap design, although that experience is part of one of the two options we preliminarily adopted.

Institution Decision. Additionally, Petitioner's argument, in its Reply, does not appear to take issue with our requirement (in both options) of "some experience dealing with wireless communications systems and monitoring devices." *See id.* at 1–2.

Accordingly, after considering the complete record before us, we maintain our preliminary finding as set forth in the Institution Decision and reiterate that one of ordinary skill in the art would have: (1) a bachelor's degree in mechanical, industrial, or civil engineering and some experience dealing with wireless communications systems and monitoring devices or (2) some experience dealing with wireless communications systems and monitoring devices and at least two years of experience in the construction and use of wildlife traps. *See* Inst. Dec. 12 (setting forth the same options for the level of ordinary skill in the art).

2. The Parties' Experts

In the briefing in this proceeding, each party makes statements potentially calling into question whether the other party's expert has the experience to qualify as one of ordinary skill in the art. In particular, Petitioner contends that Dr. Nesbit "acknowledges that he does not have any specific expertise with animal trap design or the trapping of animals." Pet. Reply 1–2. Patent Owner, on the other hand, raises inconsistent arguments regarding Dr. Ditchkoff. In arguing that one of ordinary skill in the art would not have been motivated to combine the teachings of the references as proposed by Petitioner, Patent Owner specifically points to Dr. Ditchkoff's work experience, contending that even Dr. Ditchkoff did not consider the combination proposed. *See, e.g.*, PO Resp. 24–26. In so doing, Patent Owner expressly equates Dr. Ditchkoff's experience as "providing direct

evidence" as to what one of ordinary skill in the art would or would not have been motivated to do. *See id.* at 25–26 ("Petitioner's expert, considered one of the leading experts in the field of wild pig trapping at the time of the invention, never even considered the use of these key features in isolation, and certainly never considered the specific combination required by the claims, providing *direct evidence that a PHOSITA*[15] would not be motivated to combine the asserted art to arrive at the claimed invention." (emphasis and footnote added)). Nonetheless, in Patent Owner's Sur-reply, Patent Owner states, "Petitioner . . . rel[ies] on . . . *ipse dixit* assertions from its expert—who is not a PHOSITA and is not qualified to speak for one—as to what a PHOSITA would know or understand." PO Sur-reply 2; *see id.* at 14 (similarly stating that Dr. Ditchkoff is not one of ordinary skill in the art). Patent Owner cannot have it both ways. Aside from expressly conflicting with the argument raised in the Patent Owner Response, this statement in the Sur-reply is unsupported and undeveloped.[16]

"To offer expert testimony from the perspective of a skilled artisan in a patent case—like for claim construction, validity, or infringement—a witness must at least have ordinary skill in the art." *Kyocera Senco Indus. Tools, Inc. v. Int'l Trade Comm'n*, No. 2020-1046, 2022 WL 189822, at *4 (Fed. Cir. Jan. 21, 2022). On the complete record before us, however

---

[15] Person of ordinary skill in the art.

[16] In addition, Patent Owner did not raise the allegation—that Dr. Ditchkoff is not a person of ordinary skill in the art—in its Response, which we find constitutes a waiver of that argument. *See* Paper 14 (Scheduling Order), 8 ("Patent Owner is cautioned that any arguments not raised in the response may be deemed waived."); *see also In re NuVasive, Inc.*, 842 F.3d 1376, 1381 (Fed. Cir. 2016) (determining that an argument not raised in a patent owner response was waived).

undeveloped, we find that both Drs. Nesbit and Ditchkoff possess the experience to offer expert testimony from the perspective of one of ordinary skill in the art. Specifically, Dr. Nesbit possesses the education and experience to have at least ordinary skill in the art under at least our first prong of the level of ordinary skill in the art—(1) a bachelor's degree in mechanical, industrial, or civil engineering and some experience dealing with wireless communications systems and monitoring devices. *See* Ex. 2002 ¶¶ 8–15. And, Dr. Ditchkoff possess the education and experience to have at least ordinary skill in the art under at least our second prong of the level of ordinary skill in the art—"(2) some experience dealing with wireless communications systems and monitoring devices and at least two years of experience in the construction and use of wildlife traps." *See* Ex. 1002 ¶¶ 6–20; *see also id.* ¶ 16 (noting experience with "a semi-automated system for animal detection in time-lapse camera trap images); PO Resp. 24–25 (noting Dr. Ditchkoff's experience using cameras (monitoring devices) and cellular networks (wireless communications systems) as part of his research).[17]

Further, to the extent either party asserts, without explanation, that we should give less weight to the other party's expert's testimony because of some alleged deficiency with respect to the expert possessing the level of ordinary skill in the art, we disagree with such assertions because we find both experts qualified. We address Patent Owner's argument—that Dr. Ditchkoff's experience informs as to whether one of ordinary skill in the

[17] In this discussion, Patent Owner states that Dr. Ditchkoff used the cameras "to determine optimal locations for animal-activated traps" as opposed to using the cameras "to identify the presence of animals within a trap" (PO Resp. 24–25), but that level of experience is not required by our definition of the level of ordinary skill in the art.

art would have been motivated to combine the teachings of the references as proposed by Petitioner—when we address the issue of motivation to combine, below.

II. CLAIM CONSTRUCTION

In this *inter partes* review, claims are construed using the same claim construction standard that would be used to construe the claims in a civil action under 35 U.S.C. § 282(b). *See* 37 C.F.R. § 42.100(b) (2020). The claim construction standard includes construing claims in accordance with the ordinary and customary meaning of such claims as understood by one of ordinary skill in the art at the time of the invention. *See id.*; *Phillips v. AWH Corp.*, 415 F.3d 1303, 1312–14 (Fed. Cir. 2005) (en banc). In construing claims in accordance with their ordinary and customary meaning, we take into account the specification and prosecution history. *Phillips*, 415 F.3d at 1315–17.

If the specification "reveal[s] a special definition given to a claim term by the patentee that differs from the meaning it would otherwise possess[,] . . . the inventor's lexicography governs." *Phillips*, 415 F.3d at 1316 (citing *CCS Fitness, Inc. v. Brunswick Corp.*, 288 F.3d 1359, 1366 (Fed. Cir. 2002)). Another exception to the general rule that claims are given their ordinary and customary meaning is "when the patentee disavows the full scope of a claim term either in the specification or during prosecution." *Uship Intellectual Props., LLC v. United States*, 714 F.3d 1311, 1313 (Fed. Cir. 2013) (quoting *Thorner v. Sony Computer Entm't Am., LLC*, 669 F.3d 1362, 1365 (Fed. Cir. 2012)).

Additionally, only terms that are in controversy need to be construed, and these need be construed only to the extent necessary to resolve the

controversy. *Vivid Techs., Inc. v. Am. Sci. & Eng'g, Inc.*, 200 F.3d 795, 803 (Fed. Cir. 1999); *Nidec Motor Corp. v. Zhongshan Broad Ocean Motor Co.*, 868 F.3d 1013, 1017 (Fed. Cir. 2017) (citing *Vivid Techs.* in the context of an *inter partes* review).

A. "telephone controller"

Although Petitioner proposes construing "telephone controller" in the Petition (*see* Pet. 9–10) and Patent Owner contests that construction in its Response (*see* PO Resp. 9–10), Patent Owner does not assert that the prior art fails to teach the recited "telephone controller" under either party's proposed construction. *See generally* PO Resp.; *see also* Pet. Reply 2 (noting that Patent Owner does not argue that the prior art fails to teach a "telephone controller"). In this circumstance, resolving the parties' disagreement as to the construction of the term is not "necessary to resolve the controversy" before us regarding the application of the art to the claims. Therefore, we decline to construe "telephone controller" expressly. *See* Inst. Dec. 8–9 (reaching the same determination on the preliminary record).

B. "wireless detection signal"

1. The Parties' Arguments

In the Petition, Petitioner asserts that "[t]he vast majority of the terms appearing in the claims of the '228 patent can be afforded their plain and ordinary meaning." Pet. 9. For support, Petitioner points to the district court's construction order in the Bull Creek litigation, where Petitioner asserts the district court construed various claim terms in accordance with their plain and ordinary meaning. *Id.* (citing Ex. 1011 (Order, Bull Creek litigation, dated Feb. 19, 2020)). Outside of these statements, Petitioner

does not address, expressly, the construction of "wireless detection signal" in the Petition.

Patent Owner first raises the construction of "wireless detection signal" in its Patent Owner Response. PO Resp. 11–12. Patent Owner asserts that it "did not believe this term required construction until it became clear that Petitioner is offering a construction of the term, even though it did not expressly do so in the claim construction section" of the Petition. *Id.* at 11. Patent Owner contends that "Petitioner argues that a 'continuous' video transmission signal that is 'visually observed by the user to detect the presence of wildlife in or around the trap' falls within the plain and ordinary meaning of the 'wireless detection signal.'" *Id.* In contrast, Patent Owner asserts that a "wireless detection signal" should be construed to mean a "signal that is wirelessly transmitted when an animal is detected." *Id.*

Patent Owner asserts that "the claims, specification, and prosecution history make clear that the 'wireless detection signal' cannot be a simple video transmission that happens to have an animal on the screen, as Petitioner contends." PO Resp. 11. Patent Owner points to the language of claim 1, which states that "upon detection of a presence of the plurality of feral pigs within the enclosure by the camera assembly, the camera assembly transmits [a] wireless detection signal to the display device." *Id.* (quotation omitted) (alteration by Patent Owner) (citing Ex. 1001, 8:12–15).

Additionally, Patent Owner asserts that during prosecution of the '228 patent, Patent Owner argued that a continuous video signal does not teach the recited "wireless detection signal." PO Resp. 11–12. Patent Owner reproduces the following argument:

> [Godts] fails to disclose a camera assembly that (a) detects the presence of at least one wild animal within the enclosure, and

> (b) upon such detection, transmits a ***wireless detection signal*** to a display device. Indeed, the television camera disclosed by [Godts] merely produces a display of an animal within the trap to allow "the user to identify the animal to capture while avoiding direct eye look." . . . Thus, the television camera disclosed by [Godts] does not detect the presence of the animal within the trap, and the television camera also does not transmit a ***wireless detection signal*** to a display device.

Id. at 12 (alterations by Patent Owner) (citing Ex. 1009, 204). Patent Owner contends "both the plain language of the claim and the prosecution history make clear that the 'wireless detection signal' is transmitted in response to detection of animals, and does not cover continuous video transmission that might happen to include animals." *Id.* (citing Ex. 2002 ¶ 40).

In its Reply, Petitioner contends that it proposes the same construction that Patent Owner proposed in the Bull Creek litigation and which the district court adopted—plain and ordinary meaning. Pet. Reply 3–4 (citing Ex. 1012 (Patent Owner's Opening Claim Construction Brief), 16–17; Ex. 1011, 2). Petitioner asserts that in the district court, the defendants argued that "wireless detection signal" required identification of an animal and Patent Owner disagreed. Petitioner quotes the following argument by Patent Owner:

> The term "wireless detection signal" should be construed as having its '***plain and ordinary meaning'*** as this term is readily understandable."
>
> . . . .
>
> ***There is nothing that indicates the inventor chose to define or otherwise limit*** the term "wireless detection signal" to require that the signal "indicates that an animal has been specifically identified."

Id. (quoting Ex. 1012, 16–17) (emphasis added by Petitioner).

Additionally, Petitioner points to columns five and six of the ’228 patent and the district court’s discussion thereof, asserting that the patent expressly teaches different modes of operating the trap, one of which is a manual mode, where the camera continuously streams the inside of the pen. Pet. Reply 4 (citing Ex. 1011, 2; Ex. 1001, 5:66–6:22). Petitioner contends that Patent Owner’s “proposed construction of ‘wireless detection signal’ would exclude the above-mentioned ‘manual mode’ of operation.” *Id.* Petitioner argues that its “analysis of the scope of the plain and ordinary meaning of ‘wireless detection signal’ is consistent with the [district] court’s analysis of the meaning of this term, and with the scope and content of the specification of the ’228 Patent.” *Id.*

In its Sur-reply, Patent Owner argues that its position here is not contrary to the position presented to the district court because Patent Owner did not anticipate Petitioner’s argument in this proceeding. PO Sur-reply 5–7. In particular, Patent Owner asserts that it did not expect this disagreement as to the plain and ordinary meaning because no party in the Bull Creek litigation argued the same meaning of “wireless detection signal” as asserted by Petitioner here. *See id.* at 6.

Additionally, Patent Owner contends that Petitioner “misconstrues the claim construction order.” PO Sur-reply 7. Patent Owner asserts that the district court’s discussion of different modes of operation was in the context of discussing a different patent (i.e., the ’126 patent), not at issue in this proceeding or IPR2020-01471, and that the court did not “conclude[] that the claims of the ‘228 Patent encompass all four modes of operation.” *Id.* & n.2 (citing Ex. 1011, 3–6). Patent Owner contends that because the claims of the ’228 patent “require that the wireless detection signal be transmitted

'upon detection of the presence of a plurality of feral pigs within the enclose,' they cannot read on a mode of operation that simply involves running a camera—something more must provide a 'wireless detection signal' when detection occurs." *Id.* at 7.

2. Analysis

The parties do not dispute the term "wireless" and they do not dispute the term "signal." The dispute focuses on the term "detection." The word "detection" modifies the word "signal." There is no need to construe the term further than to observe that a detection signal is a signal that indicates, communicates, or otherwise is reflective of detection.

Petitioner does not present a specific definition of the term, opting to argue plain and ordinary meaning. *See* Pet. Reply 3 ("Petitioner and its expert have taken the position that this term is entitled to its plain and ordinary [meaning]."). Despite not proposing a specific construction for the term, Petitioner asserts that Jeong's continuous mode of operation (where a signal is transmitted continuously by the video capturing unit) teaches a wireless detection signal because *a user* can visually detect the presence of wildlife. *See* Pet. 31 (Jeong's "continuous signal is a detection signal because the user can visually detect the presence of wildlife in the images contained in the transmission signal."). Limitation 1[h], however, requires that the wireless *detection* signal be transmitted upon *detection by the camera assembly*. Thus, Petitioner's attempt to map Jeong's continuous signal where detection is *by a user* to the subject matter of the Challenged Claims, where the detection is *by the camera assembly*, is insufficient. Additionally, if we were to interpret the transmission of a continuous wireless signal as the wireless detection signal, such interpretation would

negate the purpose of limitation 1[h], which recites that the wireless detection signal is transmitted "upon detection" of the animal within the enclosure. In other words, construing a wireless detection signal to be a continuous signal transmitted before *and* upon detection negates the purpose of transmitting the signal upon detection so as to indicate the presence of the animal.

On the other hand, we do not agree with Patent Owner's proposed construction because that construction reads two additional limitations into the claim—a requirement as to the timing of the signal's transmission and what is being detected—by requiring *transmission when an animal is detected*. Although the phrase "wireless detection signal" is a wireless signal that indicates, communicates, or otherwise is reflective of detection, the phrase itself does not define the "what" that is being detected or the "when" for transmitting the signal. Those aspects—when the signal is transmitted and what is indicated as being detected—are recited in other clauses of the Challenged Claims. For example, limitation 1[h] of claim 1 specifically recites "wherein, upon detection of a presence of the plurality of pigs within the enclosure by the camera assembly, the camera assembly transmits the wireless detection signal to the display device." Thus, this clause explains *when* the wireless detection signal is transmitted and *what* is being detected. Because the claims already include language explicitly reciting these additional features, we decline to read those features into "wireless detection signal."

For the purposes of this Decision, we need not construe "wireless detection signal" expressly because, as discussed below, there is no dispute that when Jeong is operated in its sensor mode (i.e., when Jeong's system

includes a detecting sensor that triggers the start of its video capturing unit and its transmission of the video to a display), Jeong teaches using a detecting sensor as part of the video capturing unit to determine *what* the camera will detect (i.e., the presence of an animal) and *when* the camera unit will transmit its detection signal to a display. The parties dispute whether Jeong's video transmission signal to the display is *wireless* and also dispute whether that video transmission signal indicates detection of animals *within an enclosure*, but the parties do not dispute whether that signal is a *detection* signal. Accordingly, we need not further construe the term expressly to find that Jeong's system teaches a detection signal when operated in its sensor mode.

III. ANALYSIS

A. Legal Standards – Obviousness

The U.S. Supreme Court set forth the framework for applying the statutory language of 35 U.S.C. § 103 in *Graham v. John Deere Co. of Kansas City*, 383 U.S. 1, 17–18 (1966):

> Under § 103, the scope and content of the prior art are to be determined; differences between the prior art and the claims at issue are to be ascertained; and the level of ordinary skill in the pertinent art resolved. Against this background, the obviousness or nonobviousness of the subject matter is determined. Such secondary considerations as commercial success, long felt but unsolved needs, failure of others, etc., might be utilized to give light to the circumstances surrounding the origin of the subject matter sought to be patented.

The Supreme Court explained in *KSR International Co. v. Teleflex Inc.* that

> [o]ften, it will be necessary for a court to look to interrelated teachings of multiple patents; the effects of demands known to the design community or present in the marketplace; and the background knowledge possessed by a person having ordinary

> skill in the art, all in order to determine whether there was an apparent reason to combine the known elements in the fashion claimed by the patent at issue. To facilitate review, this analysis should be made explicit.

550 U.S. 398, 418 (2007) (citing *In re Kahn*, 441 F.3d 977, 988 (Fed. Cir. 2006) ("[R]ejections on obviousness grounds cannot be sustained by mere conclusory statements; instead, there must be some articulated reasoning with some rational underpinning to support the legal conclusion of obviousness.")).

"Whether an ordinarily skilled artisan would have been motivated to modify the teachings of a reference is a question of fact." *WBIP, LLC v. Kohler Co.*, 829 F.3d 1317, 1327 (Fed. Cir. 2016) (citations omitted). "[W]here a party argues a skilled artisan would have been motivated to combine references, it must show the artisan 'would have had a reasonable expectation of success from doing so.'" *Arctic Cat Inc. v. Bombardier Recreational Prods. Inc.*, 876 F.3d 1350, 1360–61 (Fed. Cir. 2017) (quoting *In re Cyclobenzaprine Hydrochloride Extended-Release Capsule Patent Litig.*, 676 F.3d 1063, 1068–69 (Fed. Cir. 2012)).

B. Ground 1: Obviousness over TB1, TB2, Jeong, and Optionally Vorhies

Petitioner contends that the combination of TB1, TB2, Jeong, and optionally Vorhies would have rendered the subject matter of claims 1–3, 13–17, 26, and 27 of the '228 patent obvious to one of ordinary skill in the art at the time of the invention. Pet. 16–47.

In addition to challenging Petitioner's arguments as to motivation to combine, Patent Owner raises two primary arguments directed to the limitations of the claims. First, Patent Owner contends that the references do not disclose a wireless control signal. PO Resp. 14–19. We do not agree.

In particular, Petitioner relies on two alternatives as teaching or suggesting a wireless control signal—Jeong alone and Jeong in combination with Vorhies. We find that both alternatives teach or suggest a wireless control signal for the reasons explained herein.

Second, Patent Owner asserts that the references do not disclose detection of a presence of the plurality of feral pigs/wild animals[18] within the enclosure by the camera assembly. PO Resp. 19–23. We disagree with this argument by Patent Owner because we find that Petitioner has established that one of ordinary skill in the art would have been motivated to combine the references in such a manner as to satisfy the recited subject matter with a reasonable expectation of success. In particular, Patent Owner's arguments read the references too narrowly and fail to fully appreciate the rationale for the combination proposed by Petitioner and the evidentiary underpinnings provided in the prior art and by Petitioner's declarant.

We also remark on the following organization of the discussion below. In particular, Patent Owner's Response contests Petitioner's assertions with respect to several limitations of the claims (as noted above) as well as Petitioner's argument that one of ordinary skill in the art would have been motivated to combine the teachings of the references with a reasonable expectation of success. *See, e.g.*, PO Resp. 13–14 (identifying the contested limitations), 23–35 (contesting Petitioner's arguments as to motivation and reasonable expectation of success). The sequence of Patent Owner's arguments directed to the limitations of the claims does not match the structure of the claims. For example, limitation 1[f] recites a "wireless

[18] Claims 1 and 28 recite methods for capturing a plurality of feral pigs, whereas claim 14 recites a method for capturing a plurality of wild animals.

detection signal" and limitation 1[g] recites a "wireless control signal." Patent Owner argues, *inter alia*, that Jeong does not teach a wireless control signal because Jeong does not disclose a wireless signal. *See id.* at 15–17. Patent Owner, however, does not raise the same argument in response to limitation 1[f]'s recitation of a *wireless* detection signal. Because Petitioner addresses the wireless aspect of the claims in the context of limitation 1[f] (where it is first recited ("wireless detection signal")) and Patent Owner addresses the wireless aspect of the claims in the context of limitation 1[g] (where it is later recited ("wireless control signal")), Patent Owner's arguments do not have a direct correspondence to Petitioner's—Patent Owner's arguments do not respond to Petitioner's positions where they are first raised. In order to fully address Patent Owner's arguments, we address them not only in the context in which they are raised, but also in the context where they appear most applicable to respond to Petitioner's arguments directed to the same limitations of the claims.

1. Level of Ordinary Skill in the Art

The level of ordinary skill in the art is set forth above. *See supra* § I.G.1.

2. Scope and Content of the Prior Art

a. TB1

TB1 is an archived copy of the contents of an internet webpage found on the TexasBoars.com website, that discloses a corral trap for capturing

wild pigs. Ex. 1003. An image from TB1, showing a photograph of a corral-style trap is reproduced below:

The image shows a group of pigs within a corral-style metal trap. *See id.* The trap is a metal enclosure placed on the ground and includes a gate capable of opening and closing, although shown in the closed position here. *See id.*

b. TB2[19]

TB2 is an archived copy of a webpage from the TexasBoars.com website containing a presentation on how to construct a wild hog trap, titled "HOW TO BUILD A WILD HOG TRAP." Ex. 1004, 1. TB2 contains slides describing, "BUILDING A TRAP DOOR" that "demonstrate how to build a reliable Guillotine Trap Door, Latch and Catch." *Id.* at 2. These slides describe how to cut and frame an opening in a cattle panel and how to make the guillotine door and catches to hold the door closed when a hog is

[19] Petitioner explains that "[a]though TB2 is also content pulled from the same website as TB1, given that these materials have different apparent dates and are derived from different webpages on the TexasBoars website, they will be treated as separate documents out of an abundance of caution." Pet. 11. Petitioner refers to the combined teachings of TB1 and TB2 as the "TexasBoars Combination." *Id.* at 30.

trapped. *Id.* at 9–18. These slides also describe how to make a latch mechanism, on which the door will rest when it is open. *Id.* at 19–32. The slides further describe using a trip wire that, when hit, causes the latch to come out from under the door and allows the door to fall. *Id.* at 32–34. TB2 also contains slides pertaining to "BUILDING A TRAP" that describe attaching the panel with the trap door to other cattle panels to form an enclosure for trapping wild hogs. *Id.* at 38–46.

c. Jeong

Jeong is titled "[s]ystem for remote capture of a wild animal." Ex. 1005, code (54). Jeong's system is for capturing wild animals, such as wild boars, which allows real-time monitoring of the approach of a wild animal from a household or an office remote from a site where an animal appears, and allows for capture of an animal without a user being at the site. *Id.* at 4.[20] Figure 1 of Jeong is reproduced below.

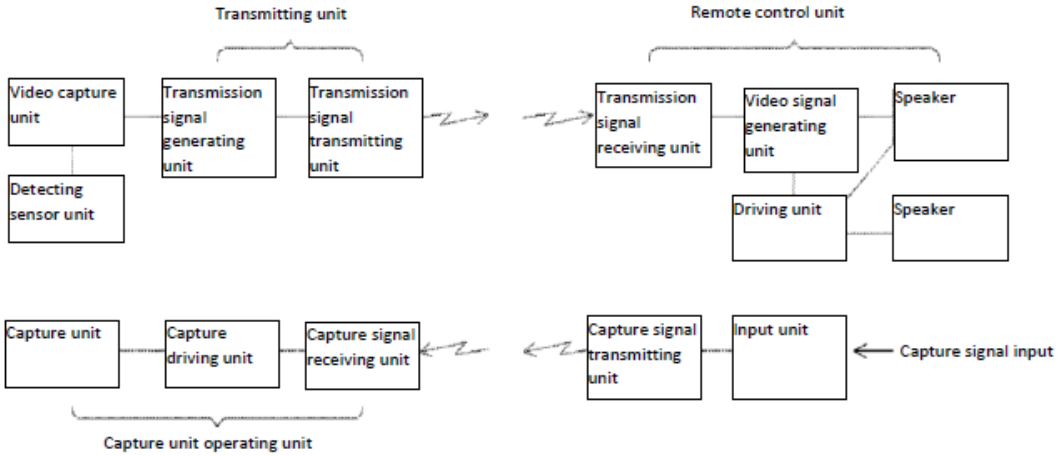

Id. at 6. Figure 1 is a rough schematic drawing of Jeong's system for capturing a wild animal, which depicts a number of labeled boxes organized

[20] Citations are to the page of the exhibit and not to the page numbers at the bottom, center of the translation.

generally into three groups. *Id.* at 5. In the upper left portion of Figure 1, a box labeled "Video capture unit" is shown connecting to a group of two boxes, designated "Transmitting unit," that is shown transmitting a signal to the right to a "Remote control unit" comprising a group of seven boxes, which are stacked vertically in groups of three, two, and two boxes (from the top to the bottom). At the lower-right portion of Figure 1, a capture signal is shown being input to the two boxes at the bottom of the stack, including the box labeled "Capture signal transmitting unit," which in turn is shown transmitting a signal to the left to a group of three boxes labeled "Capture unit operating unit." *Id.* at 6. Jeong states that the invention preferably comprises "a video capturing unit and a transmission unit installed on-site, and a remote control unit and a capture unit actuator installed at a remote control location." *Id.* at 5.

Jeong states that the video capturing unit may be "comprised of an infra-red camera" and at least one of the video capturing units is preferably installed on trees or artificially made poles near sites where wild animals are frequently sighted. Ex. 1005, 5. Jeong explains that the video capturing unit "preferably monitors the site in real-time with continuous capture of video," but does not exclude using a detecting sensor that detects the approach of a wild animal and sends a signal that starts the video capturing unit. *Id.* Jeong also explains that the transmitting unit "converts a video signal transmitted from the video capturing unit into a transmission signal," which is transmitted to the "remote control unit" at a remote control site. *Id.* The "remote control unit" comprises "a transmission signal receiving unit, a video signal generating unit, a display, an input unit, and a capture signal

transmitting unit." *Id.* Jeong states that the display may be "an ordinary monitor." *Id.*

Additionally, Jeong explains the following regarding its capture unit. In particular, Jeong states that "[t]he capture unit is a means for capturing a wild animal alive" and "specific examples thereof may be a net or a cage which is ordinarily used for the capture of wild animals." Ex. 1005, 6. Jeong teaches that "[s]uch net or cage may be installed on top of a tree or an artificial pole or tower . . . in a configuration wherein a signal from the driving unit triggers a solenoid which drops the net or cage from the tree or artificial pole or tower to capture the wild animal." *Id.* Jeong explicitly states that "this is only an example, and the capture unit according to the present invention may be configured in a variety of ways." *Id.*

Jeong describes the overall operation of the invention as follows:

> First, when a wild animal approaches a position where a video capturing unit is installed, the video capturing unit is triggered, and the signal of the capture video is transmitted as a transmission signal through a transmitting unit to the remote control site. At the remote control site, the signal transmitted from the transmitting unit triggers an alarm sound from a speaker, notifying a monitoring person of the approach of the wild animal, and the monitoring person monitors the movement of the wild animal through a display.
>
> The monitoring person continues to monitor the wild animal in real time through the monitor, and when the wild animal is detected to move near the capture unit, a capture signal is transmitted, and the driving unit triggers the capture unit according to the transmitted capture signal, capturing the wild animal alive.

Id.

d. Vorhies

Vorhies is titled "Humane Tubular Trap, Remote Trap Monitoring System and Method and Programs for Monitoring Multiple Traps." Ex. 1006, code (54). Vorhies relates to traps and "electronic data communications systems that enable remote monitoring of the status of any type of trap (e.g., is the trap tripped or not)." *Id.* ¶ 2. Vorhies describes a desire in the trapping industry to develop humane trapping systems, such as live hold trapping systems, e.g., cage traps. *Id.* ¶ 5. Vorhies also states that traps should be checked daily. *Id.* ¶ 6. Vorhies explains that "the need for humane animal control is growing," and "there is an unmet need in the field for an improved, non-injurious, non-invasive, simple, light-weight, effective trap . . . [and] a more effective and efficient means of monitoring traps." *Id.* ¶¶ 13–14.

Vorhies describes an embodiment of its trap that "uses a single door at one end, an electrically powered trigger system comprising a spring-biased door release, a solenoid-actuated catch, a magnetic trigger system, a battery and associated electrical switches." Ex. 1006 ¶ 20. Vorhies explains:

> [T]he door is held in its "ready", un-triggered, raised position by a solenoid pin, or a spring-biased rod having a solenoid catch, that extends through a hole in the door adjacent the bottom of the door. When the trap is tripped, the solenoid pin or rod retracts, the door descends and it engages a switch that opens the circuit, killing power to the solenoid door release latch pin or the rod catch solenoid. The spring biases the solenoid pin or the rod to the extended position, positively latching the door in the closed position through a hole adjacent the top of the door (the "trap sprung" hole).

Id. ¶ 27; *see also id.* ¶¶ 62–66, Figs. 1*a*–1*f*. In one embodiment, the trap is tripped using a magnetic switch responsive to a magnet secured to the

bottom of a bait can. *Id.* ¶ 30. In another embodiment, the trap uses a trigger plate, where the weight of the bait presses a plunger down breaking contact with a circuit and allowing the spring-biased solenoid or latch rod to remain extended, and when the bait is moved, the plunger rises, closing the switch, which causes the solenoid rod to retract. *Id.* In another embodiment, a normally open micro-switch is mounted below a trigger plate, which upon being depressed closes the switch. *Id.* Vorhies discloses another embodiment that uses a "mechanical, non-electric implementation" to trigger the trap using a trigger plate, trigger wire, trip rod, and trip rod release lever. *Id.* ¶¶ 68–69, Figs. 2*a*, 2*b*, 3, 4.

Vorhies also describes a "trap monitoring and management electronic data communications system [that] includes both trap-mounted or trap-connected components, separate, remote signal relays, monitoring station components, and auxiliary equipment including locators (GPS locators)." Ex. 1006 ¶ 22. A trap communications module includes a transmitter or transceiver to communicate with a home base monitoring station and a handheld GPS locator device. *Id.* Vorhies teaches that the trap communications module uses wireless signal transmission, i.e., an RF signal transmitter, to send a signal to a remote receiver representative of a trap trip event for remote management of its trap system. *Id.* at claim 3. Vorhies describes that, using its system, trappers can monitor many traps simultaneously from a single "home" base and visually or audibly check when an individual trap is tripped. *Id.* ¶ 23.

3. Differences Between the Prior Art and the Claims; Motivation to Modify

a. Independent Claim 1

i. Preamble

The preamble of claim 1 recites "[a] method for capturing a plurality of feral pigs, comprising." Ex. 1001, 7:50–51. Petitioner argues that, to the extent the preamble is limiting, TB1 discloses the use of a trap for capturing a plurality of wild pigs because it has a picture of a trap or enclosure containing several animals and a notation above the picture stating, among other things, "it looks like we caught a small herd of pigs."[21] Pet. 17–18 (citing Ex. 1003; Ex. 1002 ¶ 90).

Patent Owner does not contest Petitioner's arguments with respect to the preamble of claim 1. *See generally* PO Resp.

We need not determine whether the preamble is limiting because we find Petitioner's arguments persuasive and supported sufficiently on the complete record before us, and, therefore, we adopt them as our own findings. Accordingly, even if the preamble is limiting, we find that TB1 teaches or suggests the preamble of claim 1 for the reasons explained by Petitioner.[22]

---

[21] Petitioner explains that "wild pigs" is a broad term that "refers to all non-domesticated swine and includes feral swine (feral pigs, feral hogs, feral boar), as well as wild boar, and hybrids of the two" and "'feral' refers to animals that can be traced back to escaped or released domestic pigs." *Id.* at 17 n.3 (citing Ex. 1002 ¶ 11 n.1).

[22] We also find that Patent Owner waived any argument that the preamble is not taught by TB1 by not raising such argument in the Patent Owner Response. *See* Paper 14 (Scheduling Order), 8 ("Patent Owner is cautioned that any arguments not raised in the response may be deemed waived."); *see also In re NuVasive, Inc.*, 842 at 1381 (determining that an argument not raised in a patent owner response was waived).

ii. Limitation 1[a]

Limitation 1[a] recites "moving at least one portion of an enclosure from an open position that permits passage of a plurality of feral pigs into the enclosure to a closed position that restricts passage of the plurality of feral pigs out of the enclosure." Ex. 1001, 7:52–56. Petitioner contends that TB1 teaches the subject matter of limitation 1[a]. Pet. 18–19. Specifically, Petitioner argues that the picture included in TB1, discussed in regard to the preamble, discloses an enclosure trap having a moveable door that, in the open position, allows ingress of a plurality of wild pigs into the enclosure, and in the closed position, prevents egress. *Id.* at 18. Petitioner asserts that the guide rails, which guide movement of the door from an open to closed position, are visible and extend above the top of the trap.[23] *Id.* (citing Ex. 1003). Petitioner points to the notation above the picture, which states, "we put the gate ***up*** Sunday and came back Thursday and it looks like we caught a small herd of pigs!" *Id.* (citing Ex. 1003 (emphasis by Petitioner)). Moreover, Petitioner argues that the front gate is shown in the closed position in the photograph, thereby restricting passage of the herd of pigs out of the enclosure. *Id.* at 18–19 (citing Ex. 1003; Ex. 1002 ¶ 91).

Patent Owner does not contest Petitioner's arguments with respect to limitation 1[a]. *See generally* PO Resp.

We find Petitioner's arguments persuasive and supported sufficiently on the complete record before us, and, therefore, we adopt them as our own

[23] Petitioner states that one of ordinary skill in the art "would recognize that this type of gate is commonly referred to as a 'guillotine.'" Pet. 18 (citing Ex. 1002 ¶ 91).

findings. Accordingly, for the reasons explained by Petitioner, we find that TB1 teaches or suggests limitation 1[a].[24]

iii. Limitation 1[b]

Limitation 1[b] recites "wherein in the closed position, the enclosure cooperates with a ground surface to define an enclosure area in which the plurality of feral pigs are trapped." Ex. 1001, 7:56–58. Petitioner contends that TB1 and TB2 each teach limitation 1[b]. Pet. 19–20. Petitioner argues, "TB1 shows that, with the guillotine door in the closed position, the enclosure is installed in a manner such that it cooperates with the ground to define an enclosure area, thus trapping the plurality of wild pigs therein." *Id.* at 19. Petitioner also argues that TB2 teaches a trap "wherein the guillotine door travels all the way to the bottom of the enclosure, such that the trap cooperates with the ground surface to define an enclosure area in which the wild pigs are trapped." *Id.* (citing Ex. 1004, 12; Ex. 1002 ¶ 93).

Additionally, Petitioner argues it is evident from TB1 that the corral-type trap depicted does not include a floor, which is consistent with the understanding of one of ordinary skill in the art that the sides of a conventional corral-type trap cooperate with the ground surface, rather than including a bottom. Pet. 19–20 (citing Ex. 1002 ¶¶ 92, 94; Ex. 1003). Petitioner contends that this understanding is also confirmed by TB2, which includes detailed instructions for the construction of a corral-type trap, as

[24] We also find that Patent Owner waived any argument that limitation 1[a] is not taught by TB1 by not raising such argument in the Patent Owner Response. *See* Paper 14 (Scheduling Order), 8 ("Patent Owner is cautioned that any arguments not raised in the response may be deemed waived."); *see also In re NuVasive, Inc.*, 842 at 1381 (determining that an argument not raised in a patent owner response was waived).

depicted in TB1, and "clearly does not include a floor." *Id.* at 20 (citing Ex. 1004, 38–46; Ex. 1002 ¶¶ 92–94).

Patent Owner does not contest Petitioner's arguments with respect to limitation 1[b]. *See generally* PO Resp.

We find Petitioner's arguments persuasive and supported sufficiently on the complete record before us, and, therefore, we adopt them as our own findings. Accordingly, for the reasons explained by Petitioner, we find that TB1 and TB2 each teach or suggest limitation 1[b].[25]

iv. Limitation 1[c]

Limitation 1[c] recites "and wherein the ground surface extends continuously from within the enclosure area to areas surrounding the enclosure." Ex. 1001, 7:58–61. Petitioner contends that, as explained in regard to limitation 1[b], the "corral-type trap depicted in TB1 clearly lacks a floor," and "the normal construction of a corral trap did not include a floor, and instead cooperated with the ground surface for ease of use, and disguise of the trap." Pet. 20 (citing Ex. 1002 ¶ 95).

Patent Owner does not contest Petitioner's arguments with respect to limitation 1[c]. *See generally* PO Resp.

We find Petitioner's arguments persuasive and supported sufficiently on the complete record before us, and, therefore, we adopt them as our own

[25] We also find that Patent Owner waived any argument that limitation 1[b] is not taught by TB1 and TB2 by not raising such argument in the Patent Owner Response. *See* Paper 14 (Scheduling Order), 8 ("Patent Owner is cautioned that any arguments not raised in the response may be deemed waived."); *see also In re NuVasive, Inc.*, 842 at 1381 (determining that an argument not raised in a patent owner response was waived).

findings. Accordingly, for the reasons explained by Petitioner, we find that TB1 and TB2 each teach or suggest limitation 1[c].[26]

v. Limitation 1[d]

Limitation 1[d] recites "wherein the enclosure comprises a release mechanism that effects movement of the at least one portion of the enclosure from the open position to the closed position." Ex. 1001, 7:62–64. Petitioner contends that, although TB1 does not teach any particular release mechanism for the door, TB2 teaches a release mechanism "in the form of a 'latch' that effects movement of the door from an open to a closed position upon being triggered." Pet. 21–22 (citing Ex. 1004, 33–34; Ex. 1002 ¶ 96). Petitioner also argues that it would have been obvious to one of ordinary skill in the art "to have provided the trap door illustrated in TB1 with the latch design taught by TB2 as an effective release mechanism for closing the very same type of guillotine door depicted in TB1 after entry of the wild pigs into the enclosure, thereby trapping the wild pigs." *Id.* at 22 (citing Ex. 1002 ¶ 97).

Patent Owner does not contest Petitioner's arguments with respect to limitation 1[d]. *See generally* PO Resp.

We find Petitioner's arguments persuasive and supported sufficiently on the complete record before us, and, therefore, we adopt them as our own

[26] We also find that Patent Owner waived any argument that limitation 1[c] is not taught by TB1 and TB2 by not raising such argument in the Patent Owner Response. *See* Paper 14 (Scheduling Order), 8 ("Patent Owner is cautioned that any arguments not raised in the response may be deemed waived."); *see also In re NuVasive, Inc.*, 842 at 1381 (determining that an argument not raised in a patent owner response was waived).

findings. Accordingly, for the reasons explained by Petitioner, we find that the combination of TB1 and TB2 teaches or suggests limitation 1[d].[27]

vi. Limitation 1[e]

Limitation 1[e] recites "wherein the release mechanism effects movement of the at least one portion of the enclosure from the open position to the closed position upon receipt of a release signal from a control mechanism that is in communication with a display device." Ex. 1001, 7:65–8:2. Petitioner argues that, as described in regard to limitations 1[a] and 1[d], the combination of TB1 and TB2 ("the TexasBoars Combination") teaches a "release mechanism," i.e., the latch of TB2, that effects movement of TB1's door from the open to the closed position upon being triggered, and TB2 discloses a triggering mechanism "in the form of a tripwire." Pet. 22–23. Petitioner acknowledges that the TexasBoars Combination does not teach that "the triggering mechanism for the latch is in the form of a 'receipt of a release signal from a control mechanism that is in communication with a display device.'" *Id.* at 23 (citing Ex. 1002 ¶ 98).

Petitioner argues, however, that Jeong discloses a system for capturing wild animals, including wild boar, by remote control (Pet. 23 (citing Ex. 1005, 4; Ex. 1002 ¶ 99), and that Jeong "teaches triggering an animal trap remotely 'upon receipt of a release signal from a control

[27] We also find that Patent Owner waived any argument that limitation 1[d] is not taught by the combination of TB1 and TB2 by not raising such argument in the Patent Owner Response. *See* Paper 14 (Scheduling Order), 8 ("Patent Owner is cautioned that any arguments not raised in the response may be deemed waived."); *see also In re NuVasive, Inc.*, 842 at 1381 (determining that an argument not raised in a patent owner response was waived).

mechanism that is in communication with a display device'" (*id.* at 26 (citing Ex. 1002 ¶ 104)). In particular, according to Petitioner, a person of ordinary skill in the art would have understood that the "remote control unit of Jeong, which includes a display, is a 'display device,' according to the plain and ordinary meaning of the term." *Id.* at 23–25 (citing Ex. 1005, 5 ("the remote control unit comprises . . . a transmission signal receiving unit, a video signal generating unit, a display, an input unit, and a capture signal transmitting unit"); Ex. 1002 ¶¶ 100, 102; Ex. 1001, 6:33–34). Petitioner argues that Jeong's display device transmits a "capture signal" to the capture signal receiving unit of a capture unit. *Id.* at 25 (citing Ex. 1002 ¶ 102); *see also* Ex. 1005, 5–6 ("capture signal receiving unit for receiving the capture signal transmitted from the capture signal transmitting unit"). Petitioner also argues the one of ordinary skill in the art would have understood that "the arrangement of the capture signal receiving unit, driving unit and solenoid disclosed by Jeong reads upon the claimed 'control mechanism.'" *Id.* (citing Ex. 1002 ¶ 103; Ex. 1001, 4:18–48). Petitioner further argues that Jeong's "control mechanism issues a 'release signal' in response to the capture signal received by the control mechanism that is in the form of the signal from the driving unit, thus operating the solenoid to trigger the trap and capture the animal remotely." *Id.* (citing Ex. 1002 ¶ 103); *see also* Ex. 1005, 6 ("a signal from the driving unit triggers a solenoid which drops the net or cage from the tree or artificial pole or tower to capture the wild animal")).

Regarding the combination of TB1 and TB2 with Jeong, Petitioner asserts it would have been obvious to one of ordinary skill in the art at the time of the invention "to have substituted the triggering mechanism/method disclosed in Jeong, *i.e.*, in the form of 'receipt of a release signal from a

control mechanism that is in communication with a display device,' for the purely mechanical tripwire triggering mechanism of the TexasBoars Combination" because this modification involves "nothing more than the substitution of one known element for another to yield predictable results to one of ordinary skill in the art." Pet. 26–28 (citing Ex. 1002 ¶¶ 105–106; *Agrizap, Inc. v. Woodstream Corp.*, 520 F.3d 1337, 1344 (Fed. Cir. 2008)). Petitioner also argues that the use of electro-mechanical trap door triggering techniques are an art-recognized equivalent for triggering a release mechanism by purely mechanical triggering methods and, therefore, one of ordinary skill in the art would have understood that "a substitution of such techniques would yield predic[t]able results with a reasonable expectation of success." *Id.* at 27 (citing Ex. 1002 ¶ 107).

Additionally, Petitioner contends that the predictability of such substitution is evidenced by Vorhies, which teaches that a purely mechanical tripwire-based triggering mechanism can be used as a substitute for its disclosed electro-mechanical embodiments. Pet. 27–28 (citing Ex. 1006 ¶¶ 27, 37–39, 58, 62–66, 68–69, Figs. 2a, 2b, 3, 4; Ex. 1002 ¶¶ 108–110). Moreover, Petitioner argues that substituting Jeong's electro-mechanical triggering techniques for the mechanical tripwire mechanism of the TexasBoars Combination would "provide ***a remote operator*** with the ability to remotely control when to close the door of the TexasBoars Combination, particularly without 'physically being at the site,' thereby increasing the operator's chances for success in capturing the target animal." *Id.* at 28 (citing Ex. 1005, 4; Ex. 1002 ¶ 111). According to Petitioner, one of ordinary skill in the art "would clearly recognize that Jeong's triggering method offers greater control over the trap by a remote operator, when

compared to a tripwire trigger that is controlled solely by the action of one or more animals inside the trap." *Id.* at 29 (citing Ex. 1002 ¶ 112 ("and citations to Ex. 1005 therein")).

Patent Owner does not contest Petitioner's arguments with respect to limitation 1[e]. *See generally* PO Resp.

We find Petitioner's arguments persuasive and supported sufficiently on the complete record before us, and, therefore, we adopt them as our own findings. Accordingly, for the reasons explained by Petitioner, we find that the combination of TB1, TB2, and Jeong teaches or suggests limitation 1[e].[28]

vii. Limitation 1[f]

Limitation 1[f] recites "wherein the display device is in communication with a camera assembly and configured to: receive a wireless detection signal from the camera assembly."[29] Ex. 1001, 8:2–6.

---

[28] We also find that Patent Owner waived any argument that limitation 1[d] is not taught by the combination of TB1 and TB2 by not raising such argument in the Patent Owner Response. *See* Paper 14 (Scheduling Order), 8 ("Patent Owner is cautioned that any arguments not raised in the response may be deemed waived."); *see also In re NuVasive, Inc.*, 842 at 1381 (determining that an argument not raised in a patent owner response was waived).

[29] Patent Owner also challenges whether the references disclose a camera assembly that transmits, or a display/transmitter that receives, a wireless detection signal. PO Resp. 23. Patent Owner's argument, reproduced below, is contingent on Patent Owner's assertion that the combined references do not teach or suggest "detection of a presence" of animals *within an enclosure*. *Id.* Specifically, Patent Owner contends:

> Since the asserted references fail to disclose the "detection of a presence" of the animals within the enclosure, they necessarily also fail to disclose a camera assembly that transmits a wireless detection signal to a display device or

Relying on its discussion of limitation 1[e], and Jeong, Petitioner contends that it would have been obvious "to have modified the TexasBoars Combination to have provided the 'remote control unit' and its functionality that reads on the claimed 'display device.'" Pet. 29. Petitioner asserts that "[t]he remote control unit (display device) includes a transmission signal receiving unit, a video signal generating unit, a display, an input unit, and a capture signal transmitting unit." *Id.* (citing Ex. 1005, Abstract; Ex. 1002 ¶ 113). Petitioner relies on Jeong's camera assembly, which includes "a camera, and one or more of: the transmission signal generating unit, the transmission signal transmitting unit and/or a sensor unit." Pet. 29 (citing Ex. 1005, 5; Ex. 1002 ¶ 114).

Petitioner asserts that two alternative embodiments of Jeong's "transmission signal" teach the claimed "detection signal." Pet. 31. In the first alternative, "Jeong teaches that the transmission signal can be ***continuous***." *Id.* Petitioner asserts that "[t]his continuous signal is a detection signal *because the user can visually detect* the presence of wildlife in the images contained in the transmission signal." *Id.* (emphasis added) (citing Ex. 1002 ¶ 115). In the second alternative, Jeong teaches that "the camera assembly is operated in response to the detection of wildlife . . .

> transmitter *upon detection* of the animals *within the enclosure* or a display or transmitter that receives the wireless detection signal, which is transmitted to the display device or transmitter *upon detection* of the animals *within the enclosure*.

PO Resp. 23. Because we find that Petitioner establishes that the combination teaches or suggests detecting the presence of animals within the enclosure, as discussed below in the context of limitation 1[h], we disagree with Patent Owner's contingent arguments here. *See infra* § III.B.3.a.ix. (discussing limitation 1[h]).

because it was initiated by a 'detection' of wildlife, and because the transmission signal can be observed by the user and confirm the presence of wildlife by viewing the images contained in the signal."[30] *Id.* (emphasis added) (citing Ex. 1002 ¶ 115).

Petitioner relies upon the district court's claim construction order in which the court determined that "wireless detection signal" and "camera assembly" should be construed according to their plain and ordinary meaning. Pet. 31 (citing Ex. 1011, 2–7). In particular, Petitioner contends that the district court's order supports finding that a continuous signal reads on the recited "wireless detection signal" (*id.* at 31 (citing Ex. 1011, 3–4)), and that the court determined that the "camera assembly may — but need not — include other devices to carry out the claimed function of the invention" (*id.* at 31–32 (quoting Ex. 1011, 7)).[31]

Petitioner asserts that

> it would've been obvious to a [person of ordinary skill in the art] at the time of the invention in view of Jeong to have further provided the TexasBoars Combination with a camera assembly (camera, transmission signal generating unit, transmission signal transmitting unit, and/or a sensor unit) in communication with the display device (remote control unit at the remote control site) in order to enable visual monitoring of the trap thereby greatly facilitating the stated objective of Jeong, *i.e.*, to "allow[] real-time monitoring of the approach of a wild animal from a remote control site far away from a site where wild

[30] As noted above, we refer to Jeong's first embodiment as the "continuous mode" and Jeong's second embodiment as the "sensor mode."

[31] As explained above and further explained below, we do not agree that Jeong's continuous signal constitutes the claimed wireless detection signal because Petitioner's position is predicated upon a user detecting the animals as opposed to the camera assembly detecting the animals as recited in limitation 1[h].

> animals are frequently sighted, and to allow for capturing of a wild animal alive through simple input of a signal."

Pet. 32 (citing Ex. 1005, 6; Ex. 1002 ¶¶ 116–117).

Regarding limitation 1[f]'s recitation of a *wireless* detection signal, Petitioner, again, presents two alternatives. Pet. 32–33. First, Petitioner contends that one of ordinary skill in the art would have understood "that the detection signal sent by [Jeong's] camera assembly is ***wireless***" because "(a) Jeong discloses that the remote control unit is intended to be located 'far away from the site,' and (b) the terms 'transmission signal generating unit' and 'transmission signal receiving unit' are associated with the camera assembly and remote control unit (display device), respectively." *Id.* at 32 (citing Ex. 1005, 5; Ex. 1002 ¶ 118).

Second, Petitioner argues that "[a]lternatively, Vorhies teaches the use of wireless signal transmission in order to facilitate the remote management of its trap system." Pet. 32. In particular, Petitioner points to claim 3 of Vorhies, which recites "[a] humane animal trap as in claim 1 which includes an electronic trap data communications module having an RF signal transmitter . . . said module being activated to send an RF signal to a remote receiver representative of a trap trip event by at least one of drop of said door and trigger disturbance." *Id.* at 33 (citing Ex. 1006, claim 3 (reciting "an RF signal transmitter" sending "an RF signal to a remote receiver"), ¶¶ 22–23). Thus, Petitioner asserts that it would have been obvious to one of ordinary skill in the art, in view of Vorhies,

> to have utilized a wireless transmission signal generating unit associated with the camera assembly, as well as a wireless transmission signal receiving unit associated with the remote control unit (display device) in order to facilitate the objective of remotely monitoring such wildlife traps, which are often

> located in remote areas, where connection to a hard wired network is either impractical or impossible.

Id. (citing Ex. 1006 ¶¶ 22–23; Ex. 1002 ¶¶ 119–120).

We first address Patent Owner's arguments directed to Petitioner's first alternative, which relies on Jeong as teaching or suggesting wireless signal transmission and then we address Patent Owner's arguments directed to Petitioner's second alternative, which relies on Vorhies as teaching or suggesting wireless signal transmission. As indicated above, Patent Owner raises its arguments directed to the "wireless" aspect of the wireless detection signal in the context of addressing the recitation of a wireless control signal. Thus, to address Patent Owner's arguments fully, we include Patent Owner's arguments regarding wireless signal transmission here.

a) Whether Jeong Teaches or Suggests Wireless Signal Transmission, Including a Wireless Control Signal

In the context of limitation 1[g], Patent Owner contends that "[t]he references do not disclose Limitation 1[g]." PO Resp. 14 (emphasis omitted from subheading). As applicable here, to limitation 1[f], Patent Owner challenges the "wireless" aspect of the detection signal identified by Petitioner in Jeong's system. *See id.* at 15–17 (discussing the signal from the capture signal transmitting unit to the capture signal receiving unit and Petitioner's arguments directed to limitation 1[f]'s recitation of a "wireless detection signal"). Patent Owner argues that Jeong does not refer to any signal expressly as "wireless" (*id.* at 15 (citing Ex. 1005, 3–6)), Jeong's statement that the remote unit is "far away from the site" does not require Jeong's signals to be wireless because wired signals are known to be used

over great distances (*id.* at 15–16 (citing Ex. 2001, 22:4–24[32]; Ex. 2002 ¶ 45)), Jeong's description of a signal between a camera and a "remote device" does not mean that the signal is wireless (*id.* at 16), and Jeong's teachings suggest that the signal transmissions are wired because they include a continuous video transmission that requires certain power and bandwidth and Jeong refers to allowing real-time monitoring from a home or office, two places where wired communications were both feasible and likely (*id.* at 16–17 (citing Ex. 1005, 3, 5; Ex. 1007 ¶¶ 1–2; Ex. 2002 ¶ 47)).

In its Reply, Petitioner "maintains" that one of ordinary skill in the art "would have interpreted the teachings of Jeong as encompassing the transmission of a wireless control signal (capture signal) and wireless detections signal." Pet. Reply 6 (citing Pet. 32, 36; Ex. 1002 ¶¶ 118, 128; Ex. 1005, 5). Petitioner notes that "[i]n Figure 1 of Jeong, there is no physical connection shown between the capture signal transmitting unit and capture signal receiving unit, or between the transmission signal transmitting unit and the transmission signal receiving unit." *Id.* According to Petitioner, "[t]his would inform the understanding of Jeong by a [person of ordinary skill in the art] and be indicative of the use of wireless signal communications by these components." *Id.* (citing Ex. 1005, 6).

In its Sur-reply, Patent Owner asserts that "[t]he prior art also lacks any disclosure of a ***wireless control signal that springs the trap***." PO Sur-reply 14. Although, as with Patent Owner's Response, this argument is directed to the wireless control signal recited in limitation 1[g], Patent Owner also states that "Jeong teaches a solenoid that drops an entire trap

[32] Exhibit 2001 is U.S. Patent No. 7,987,491 B2, issued July 26, 2011.

from a tree or a pole in response to a signal from a remote user, but does not disclose that this signal is wireless." *Id.* (citing Ex. 1005, 5).

In the Institution Decision and on the preliminary record at the time, we found that Jeong does not indicate that the transmission of its transmission signal is "wireless" and that Jeong's disclosure that the remote control unit is "far away from the site" was not sufficient to teach a wireless transmission. Inst. Dec. 29–30. On substantially the same record in the Institution Decision in related case IPR2020-01471, we also found that "Petitioner's assertion that a person having ordinary skill in the art would understand Jeong to use wireless transmission *is not contrary to the explicit disclosures in Jeong*." IPR2020-01471, Paper 13 at 24 (emphasis added). And, in that Decision, we also recognized that Dr. Ditchkoff testifies that Jeong uses terminology consistent with wireless transmission, e.g., "far away from the site," "transmission signal generating unit," and "transmission signal receiving unit." *Id.* at 25.

On the preliminary record at that time, we did not appreciate fully the significance of Jeong's Figure 1. We find persuasive Petitioner's argument, in its Reply, that Jeong's Figure 1 is drawn in such a manner as to suggest that the transmission between elements of the system connected by the broken lines with arrows are wireless transmissions. *See* Ex. 1005, Fig. 1 (the transmission between the transmission signal transmitting unit and the transmission signal receiving unit, and the transmission between the capture signal transmitting unit and the capture signal receiving unit). Specifically, elements of Jeong's system connected by a solid line are consistent with and suggest a wired connection, e.g., the line connecting the detecting sensor unit and the video capture unit, whereas elements of Jeong's system

connected by the broken lines with arrows are consistent with a wireless connection. Patent Owner's Sur-reply does not respond to Petitioner's argument regarding Figure 1. Figure 1, in light of Jeong's statements—that "[t]he remote control unit is a means installed at a remote control site such as a home or office which is far away from the site" (Ex. 1005, 5) and the invention "is configured to allow real-time monitoring of the approach of a wild animal from a remote control site far away from a site where wild animals are frequently sighted" (*id.* at 6)—provides additional support to Petitioner's argument that Jeong at least suggests transmission of wireless signals.

Accordingly, in light of the full record before us, we find that Jeong suggests to one of ordinary skill in the art that the signal transmission between the transmission signal transmitting unit and the transmission signal receiving unit, and the signal transmission between the capture signal transmitting unit and the capture signal receiving unit are wireless transmissions.[33]

b) Whether Jeong in Combination with Vorhies Teaches or Suggests Wireless Signal Transmission, Including a Wireless Control Signal

We now address Patent Owner's arguments in response to Petitioner's *second alternative*, which relies on Vorhies as teaching wireless signal transmission. *See* Pet. 32–33 (relying on Vorhies as teaching wireless signal

[33] By this finding, we do not suggest that Jeong excludes wired transmissions. Rather, there is nothing in Jeong that precludes the finding that Jeong also suggests wired transmissions for the reasons explained by Patent Owner.

transmission). With respect to this alternative, Patent Owner does not contest that Vorhies teaches wireless signal transmission. Rather, Patent Owner contends that "Vorhies does not disclose any form of wireless control over the physical movement of a remote device, and certainly does not disclose sending a 'wireless control signal' that closes a trap enclosure." PO Resp. 17; *see id.* at 17–19 (arguing whether Vorhies discloses a "control" signal). Patent Owner's arguments focus entirely on the aspect of "control" as opposed to whether Vorhies teaches wireless signal transmission. *See id.* at 18 ("Vorhies provides no disclosure of a control signal at all, and certainly not a wireless control signal"). Patent Owner asserts "the simple fact that Vorhies discloses a form of wireless communication between certain components is not enough to teach that Jeong can be modified to provide a wireless control signal." *Id.* at 18–19.

As noted above, Patent Owner's arguments do not contest that Vorhies teaches wireless signal transmission. Patent Owner's arguments as to motivation to combine are addressed below. We respond to Patent Owner's arguments here, nonetheless, in light of the overlapping issues. In particular, regarding the wireless control signal, Patent Owner argues the teachings of the references *individually* and does not respond to the particular combination of teachings presented by Petitioner. The following statement reflects Patent Owner's piecewise response to Petitioner's reliance on Vorhies in combination with Jeong and TB1: "Vorhies is completely silent with respect to a control signal of any type, and Jeong does not disclose the use of wireless signals. Thus, there is ***no*** teaching in either of

the cited references of a wireless control signal."[34] PO Resp. 19. This is not the test for obviousness, nor does this argument respond to the combination proposed by Petitioner. In particular, in this second alternative, Petitioner does not rely on Jeong for wireless signal transmission, Petitioner relies on Vorhies. And, Petitioner does not rely on Vorhies for teaching a control signal or a detection signal, Petitioner relies on Jeong. The combination in this second alternative, as discussed above, assumes Jeong's detection and control signals are not wireless and modifies the signals such that the transmissions are wireless as opposed to wired. Thus, Patent Owner's arguments that Jeong does not disclose a wireless signal and Vorhies does not disclose a control signal are inapposite because Petitioner does not rely upon those references for these teachings in this second alternative.

Accordingly, in light of the full record before us, we find that Petitioner establishes that Jeong in combination with Vorhies teaches or suggests wireless signal transmission, particularly as recited in claim 1.

---

[34] Patent Owner further asserts, "[i]n the absence of express teaching of a wireless control signal in the asserted references, it is improper to rely on 'basic knowledge' or 'common sense' (or Petitioner's expert's alleged knowledge) to supply the 'wireless control signal' required by the claims." PO Resp. 19. As noted above, we address Patent Owner's arguments regarding motivation to combine below. Nonetheless, we do not find that Petitioner has relied upon basic knowledge or common sense with respect to whether the combination of the references teaches or suggests wireless signal transmission (whether that be a wireless detection signal or a wireless control signal); rather, we find that Petitioner relies on the specific disclosures of the references themselves as they would have been understood by one of ordinary skill in the art at the time of the invention.

c) Whether Jeong or the Combination of Jeong and Vorhies Teaches a Wireless Detection Signal

Although Patent Owner raises the construction of "wireless detection signal," Patent Owner does not argue, in the context of limitation 1[f], that either of Jeong's embodiments—continuous mode or sensor mode—fails to teach or suggest a detection signal. Rather, outside of the claim construction discussion, Patent Owner's arguments with respect to "wireless detection signal" focus on whether the references "disclose 'detection of a presence of the plurality of [animals] within the enclosure by the camera assembly,'" which is recited in limitation 1[h]. *See* PO Resp. 20–23.

Nonetheless, as explained in the discussion above considering the parties' proposed constructions of "wireless detection signal," we do not agree that Jeong's continuous mode reads on the recitation of a wireless detection signal because Petitioner relies upon visual observation by a user to detect the presence of wildlife instead of detection being performed by the camera assembly as the claims require. *See* Pet. 31; *see also, e.g.*, Limitation [1h] (discussed *infra* § III.B.3.a.ix.).

We do, however, find that when Jeong's system is operated in sensor mode, meaning the embodiment taught by Jeong in which a detecting sensor triggers the video capturing unit to start transmitting its signal, that the signal transmitted by Jeong's video capturing unit to its monitor (display device) teaches a detection signal. And, we further find, for the reasons explained above, that Jeong's detection signal is transmitted wirelessly whether based on the teachings of Jeong alone or optionally modified by the teachings of Vorhies.

For the reasons explained by Petitioner and for the reasons set forth above, we find that the combination of TB1, TB2, and Jeong teaches or suggests limitation 1[f] (in the alternative where Jeong is relied on for wireless signal transmission) and we similarly find that the combination of TB1, TB2, Jeong, and Vorhies teaches or suggests limitation 1[f] (in the alternative where Vorhies is relied on for wireless signal transmission).[35]

d) Motivation to Combine[36]

As noted above, Patent Owner also challenges whether one of ordinary skill in the art would have been motivated to combine the teachings of the references on which Petitioner relies for limitation 1[f]. PO Resp. 23–35. Patent Owner raises these arguments in a separate section of its Response, but because they directly apply to the combination relied on by Petitioner for limitation 1[f], we address them here.

1. Dr. Ditchkoff's Work

Patent Owner asserts that one of ordinary skill in the art would not have been motivated to combine Jeong with TB1 and TB2 because Dr. Ditchkoff (Petitioner's expert) did not consider combining the features of the references as proposed by Petitioner. PO Resp. 24–26; *see* PO Sur-reply 17–18 (reiterating the same argument). Patent Owner contends that Dr. Ditchkoff's failure to "even consider[] the use of these key features in isolation . . . [or] combination . . . provid[es] direct evidence that a [person

[35] In each alternative, we rely on the signal transmitted by Jeong's video capturing unit when operating in sensor mode and not the signal transmitted by the video capturing unit when operating in continuous mode.
[36] The arguments set forth in the Petition as to motivation are discussed above. We set forth this subsection to more easily indicate where we address Patent Owner's arguments and our findings.

of ordinary skill in the art] would not be motivated to combine the asserted art to arrive at the claimed invention."[37] *Id.* at 25–26.

In its Reply, Petitioner notes that Patent Owner "cites no legal authority in support of [its] argument" that Dr. Ditchkoff's failure to consider the claimed combination is evidence of a lack of motivation. Pet. Reply 14. Additionally, Petitioner correctly remarks that Patent Owner does not allege that Dr. Ditchkoff tried and failed to construct a trap similar to the claimed combination, which could be evidence of nonobviousness. *Id.*

The question before us is not whether Dr. Ditchkoff was motivated to combine the teachings of the references at the time of the invention; rather, the question is whether the hypothetical person of ordinary skill in the art, who has access to all of the prior art, would have been motivated to do so. Whether Dr. Ditchkoff—a single individual—considered the combination has little persuasive value, particularly given the lack of evidence that Dr. Ditchkoff tried and failed to construct a trap similar to the claimed combination. To the extent there is any relevance, that relevance is insignificant and extremely minor in light of the reasons provided by Petitioner as to why one of ordinary skill in the art would have been motivated to combine the teachings as proposed. Those reasons are set forth above and are discussed further, below.

[37] In this context, Patent Owner acknowledges that Dr. Ditchkoff was "considered one of the leading experts in the field of wild pig trapping at the time of the invention." PO Resp. 25.

2. Basic Principles of Operation/ Core Functionality/ Different Purpose

Patent Owner asserts that one of ordinary skill in the art "would not be motivated to combine TB1/TB2 with Jeong because the combination would undermine the core functionality of TB1/TB2." PO Resp. 26. Patent Owner contends that "TB1/TB2 are 'passive' traps that require triggering by the animal," and corral traps give operators "tremendous flexibility in determining the locations of the traps" because they do not require infrastructure to permit remote activation. *Id.* According to Patent Owner, "[i]n contrast, the modified trap described in the Petition requires that the trap operator observe a video transmission of the approach of an animal toward a trap area to determine the appropriate time for activating a trap." *Id.* (citing Ex. 1005, 5). Patent Owner contends, "[t]herefore, the proposed combination of the video capture equipment and triggering mechanism of Jeong with the corral trap of TB1/TB2 results in a fundamental change to the principles of operation of the corral trap. In such cases, there is no motivation to combine."[38] *Id.* at 26–27.

In its Reply, Petitioner argues that the Board previously rejected a similar argument in an appeal from an examiner's rejections in a related patent application. Pet. Reply 15 (citing Ex. 1021 (prosecution history of

[38] Additionally, Patent Owner argues that the flexibility provided by corral traps "may be preferable" to "some users." PO Resp. 27. Even assuming some users would prefer the alleged flexibility of corral traps, that does not negate or otherwise detract from Petitioner's supported position that one of ordinary skill in the art would have been motivated to combine TB1, TB2, and Jeong.

U.S. Patent Application No. 16/122,384)). In particular, Petitioner asserts that

> [t]he modification of the TB1/TB2 corral trap as taught by Jeong results in an improved system and method that allows for more precise control of the operation of the trap, thus resulting in increased probability of capturing the target animals, and also decreases user involvement by providing for monitoring and control of the trap from a remote location.

Id. Petitioner contends that "these advantages outweigh any purported drawbacks alleged by [Patent Owner]." *Id.*

In its Sur-reply, Patent Owner raises a slightly different argument, asserting that the '228 patent solves a different problem than Jeong because "[t]he purpose of [Jeong] is to allow extensive monitoring of a single animal in the hopes that it wanders into the area that will allow a trap to be dropped onto it from above," whereas "[t]he claims of the '228 Patent seek to maximize the number of pigs captured while minimizing the amount of monitoring."[39] PO Sur-reply 15; *see also id.* at 15–16. Patent Owner contends that "[s]ince Petitioner's proposed modifications of TB1/TB2 are entirely driven by the objectives of Jeong, any such modifications must include the real-time monitoring of the approach of a wild animal toward the trap of TB1/TB2," and "[r]eal-time monitoring of the approach, which necessarily includes monitoring of the animal outside any enclosure, is

[39] To the extent Patent Owner's "different problem" argument seeks to raise a question as to whether Jeong is analogous art to the '228 patent, we disagree with that position. Jeong is directed to a "[s]ystem for remote capture of a wild animal" (Ex. 1005, code (54)) and the '228 patent is directed to "systems and methods for animal trapping" (Ex. 1001, code (12) (capitalization altered)) and, thus, we find that Jeong clearly is within the same field of endeavor as the '228 patent.

fundamentally different from the . . . claims, which require transmission of a wireless detection signal on detection of animals within the open trap enclosure." *Id.* at 16. According to Patent Owner, one of ordinary skill "would not have been motivated to replace the real-time monitoring of the approach with detection within an open enclosure, since such a modification is not disclosed in Jeong, and would completely undermine Jeong's core functionality." *Id.*

We do not find that Petitioner's combination changes the principal mode of operation of corral traps. In particular, as the word "corral" suggests, a corral trap is used to gather and catch a group of animals together. *See* Ex. 1003, 2 (illustrating the capture of a group of pigs). The modification by Petitioner changes the trigger for closing the gate from a local trigger (e.g., by use of a trip wire) to a remote trigger (e.g., by use of Jeong's system).

The modification by Petitioner changes the trigger for closing the gate from an animal-instigated closure (e.g., by use of a trip wire) to a human-instigated closure (e.g., by receiving images of animals in an enclosure and pushing a button to send a signal to close the gate).

Additionally, Petitioner persuasively establishes that the modifications proposed to TB1/TB2 would have been considered improvements and advantageous. *See, e.g.*, Pet. 32–36; Pet. Reply 11–17; *see also* Ex. 1002 ¶¶ 81, 83, 117–120. To the extent there are also disadvantages of the proposed modifications of a corral trap as taught by TB1/TB2, on balance, we find that the advantages of, *inter alia*, detection and remote monitoring, outweigh any disadvantages identified by Patent Owner. Thus, we find that even if there are instances in which passive traps may be preferred, one of

ordinary skill in the art would also have recognized that there are reasons and advantages to combine the teachings as proposed by Petitioner. We also find that one of ordinary skill in the art would have had a reasonable expectation of successfully combining the teachings at least because Jeong provides a roadmap for automating a capture device to permit detection and remote monitoring. *See, e.g.*, Pet. 32–36; Pet. Reply 14–17.

Further, we disagree with Patent Owner's arguments, in its Sur-reply, that (1) the '228 patent solves a different problem than Jeong and (2) *detecting the approach* of an animal is "fundamentally different" from *detecting animals within* an enclosure. *See* PO Sur-reply 15–16. First, the trapping method recited by claim 1[40] does not include any additional structure beyond the structure taught by the combination of Jeong, with TB1 and TB2[41]—an enclosure, a camera assembly, a display device, a control mechanism, and a release mechanism. Second, Jeong's trapping system teaches the same sequence of signals transmitted between the same structural elements recited in claim 1—a signal sent from a camera assembly to display device (detection signal), and a signal sent from a display device to a control mechanism (control signal), that corresponds to an instruction to generate a signal that is sent to a release mechanism (release signal), which, traps an animal. Third, even a comparison of claim 1 of the '228 patent with Jeong's claim 1 reflects the near identity of the subject matter discussed above. *Compare* Ex. 1001, 7:50–8:16, *with* Ex. 1005, 3; *see also* Ex. 1005, 6 (explaining "[t]he overall operation of [Jeong's] invention").

---

[40] The same is true of the trapping methods recited by the other independent claims—claims 14 and 28.
[41] Or the combination of Jeong and Vorhies with TB1 and TB2, in the alternative relying on Vorhies.

Patent Owner's alleged "fundamental differen[ce]" is *when* the alleged "detection" occurs. Patent Owner interprets Jeong narrowly as *only* teaching or suggesting detection of an animal when it is *approaching a trapping unit* and not when an animal is *within a trapping unit* (enclosure). We disagree with Patent Owner's narrow reading of Jeong; we also disagree that there is a fundamental difference between Jeong's teachings when combined with TB1 and TB2 as compared to the method of claim 1 of the '228 patent. In particular, what Jeong expressly and repeatedly teaches is that the "approach" that Patent Owner references is ***the approach of an animal to the video capturing unit***. *See, e.g.*, Ex. 1005, 2 ("a video capturing unit . . . which *detects the approach* of a wild animal"), 3 (claim 1) ("a video capturing unit, at least one of which is mounted at a given location where a wild animal appears, and which *detects the approach* of a wild animal"), 4 (same), 5 ("[t]he video capturing unit is characterized in that it is further equipped with at least one detecting sensor unit *which detects the approach* of a wild animal"), 5 ("[a]t least one of the video capturing units is preferably installed on trees or artificially made poles or towers near sites where wild animals are frequently sighted . . . *as a means of capturing video of wild animals which approach*"), 5 ("the present invention does not exclude a configuration wherein at least one detecting sensor *for detecting the approach* of a wild animal is installed"), ("wherein a signal from the at least one detecting sensor *detecting the approach* of a wild animal starts the video capturing unit") (all emphasis added). It couldn't be more clearly stated by Jeong, than this particular statement: "First, *when a wild animal approaches a position where a video capturing unit is installed*, the video capturing unit is triggered . . . ." *Id.* at 6 (emphasis added).

The particular *implementation* of the method taught by Jeong is based on the *exemplary* capture unit disclosed, which is a net or cage installed on top of a pole or tower (referred to by the parties as a suspension trap). *See* Ex. 1005, 6 (describing the "capture unit"). When describing the process involving a suspension trap, Jeong explains the operation as follows:

> First, when a wild animal *approaches a position where a video capturing unit is installed*, the video capturing unit is triggered, and the signal of the capture video is transmitted as a transmission signal through a transmitting unit to the remote control site. At the remote control site, the signal transmitted from the transmitting unit triggers an alarm sound from a speaker, notifying a monitoring person of the approach of the wild animal, and the monitoring person monitors the movement of the wild animal through a display.
>
> The monitoring person continues to monitor the wild animal in real time through the monitor, and *when the wild animal is detected to move near*[42] *the capture unit*, a capture signal is transmitted, and the driving unit triggers the capture unit according to the transmitted capture signal, capturing the wild animal alive.

Id. (emphases and footnote added). As reflected above, the "approach" referred to is that of the animal approaching "a position where a video capturing unit is installed." Additionally, in this particular implementation, after the first detection by the video capturing unit (or detecting sensor in the

---

[42] We note that although Jeong is an English-language translation, the translation uses the term "approach" to refer to the approach of an animal *to the video capture unit*. When Jeong describes a monitoring person observing the video of the animal in comparison to the capture unit, Jeong states "when the wild animal is detected to move near the capture unit." Ex. 1005, 6. In other words, Jeong does not use the term "approach" in that instance. This further reinforces that Jeong's use of "approach" indicates the *approach* of an animal *to the video capture unit*.

sensor mode of operation), the user (monitoring person) monitors the display and waits until the animal is detected to move near the capture unit. *Id.* Thus, in this particular implementation, Jeong assumes that the first detection of the animal may be outside of the capture area (where the capture unit would trap the animal), but nothing about the teachings of Jeong excludes the circumstance where the video capture unit is triggered by an animal within the capture area. Further reflective of Jeong's breadth is that (1) none of its claims are limited to a first detection outside of a capture area (*see id.* at 3), and (2) after providing the example implementation, Jeong states, "[w]hereas a single preferred embodiment of the present invention has been described . . . above, the described embodiment is meant to exemplify the present invention, and the true scope of protection sought by the present invention shall be determined based on the technical idea stated in the appended claims" (*id.* at 6). And, nothing in the technical idea stated in Jeong's claims or its system components or method requires (or otherwise limits Jeong to) detection *outside of* a capture area, as opposed to *within* a capture area (or enclosure).

As Petitioner explains, one of ordinary skill in the art would have been motivated to modify the TexasBoars Combination with Jeong's camera assembly to allow the real-time monitoring of *the approach* of a wild animal and to allow for remote capture. Pet. 32 (emphasis added). We understand Petitioner to use the term "approach" in the same manner as Jeong—*approach of the animal to the camera assembly*. In several instances, Patent Owner asserts that Petitioner cannot rely upon common sense, but it does not require any leap (even that of common sense) for one of ordinary skill in the

art to understand that Jeong teaches *detecting the approach of an animal* ***to its video capturing unit***.

Additionally, Patent Owner's argument fails to consider the teachings as combined by Petitioner. In particular, one goal of an animal trap, is, just that—to trap (capture) the animal. Petitioner relies on a corral trap, such as the corral trap taught by TB1, and, when combined with the teachings of Jeong (and optionally Vorhies), we find that Petitioner has established that one of ordinary skill in the art would have applied Jeong's camera assembly, etc. so that animals are *detected* when they are in a position to be trapped. *See* Pet. 38–39 (the skilled artisan would have mounted cameras, consistent with Jeong, to include the site and interior of the trap); Pet. Reply 12–13 (citing Ex. 2003, 206:14–21). Importantly, in a corral trap, a skilled artisan would have recognized that that position occurs only after the animals are already *within the enclosure*. Critically, the camera assembly of Jeong would operate with the same components, using the same method—to detect the approach of an animal to the camera assembly. And, in the combined teachings, when using a corral trap, we find that Petitioner has established that one of ordinary skill in the art would have placed the camera assembly so that an animal approaching the camera assembly would be *within the enclosure of the corral trap* when it is detected, so that the animal can be captured. *Id.* at 13; *see* Ex. 1002 ¶¶ 111–112 (discussing the combination of Jeong's triggering method and the benefit of increasing the operator's chance of success in *capturing* the animal).

Further, we credit Dr. Ditchkoff's testimony that "if the operation of the camera is triggered by a sensor or detector, *when at least one pig is present within the enclosure its presence will be detected, and camera*

operation will be initiated." Ex. 1002 ¶ 133 (emphasis added) (describing Jeong's system operating in sensor mode); *see also id.* ¶ 135 (explaining that Jeong also teaching monitoring the "site," which includes the capture area). And, in the *combination* proposed, meaning when Jeong is applied to a corral trap (i.e., an enclosure), the inside of the trap is *within the enclosure*. *See id.* (discussing the objective of Jeong to capture the animal as compared to a tripwire).

No evidence has been presented by Patent Owner to suggest that Jeong's camera assembly is unable to perform the function of detecting an animal within an enclosure. And, there is no evidence, from the '228 patent or otherwise, that the camera assembly recited by claim 1 (and the other Challenged Claims) is configured in some unique or otherwise specific manner—beyond simply its placement—that permits it to perform its function of detecting animals within an enclosure. For each of the reasons discussed above, we disagree with Patent Owner that (a) the '228 patent solves a different problem than Jeong and (b) Jeong's detection by the video capture unit/detecting sensor is fundamentally different than the Challenged Claims' detection by the camera assembly. Both methods use a video capturing unit/camera assembly to detect an animal and the only difference is the placement of the camera assembly, which Petitioner has shown is influenced by the type of capture unit employed.

3. Trap Design/Configuration

Patent Owner contends that one of ordinary skill in the art "would not have provided the TB1/TB2 corral trap with features designed for the suspended trap of Jeong." PO Resp. 27 (emphasis omitted from subheading). Patent Owner asserts that one of ordinary skill in the art

"would have understood that the suspended trap designs of Jeong provide a different trapping approach than the TB1-style corral traps, and therefore a [person of ordinary skill in the art] would not look to combine a trapping approach like Jeong with a corral trap like TB1/TB2." *Id.* Patent Owner contends that "conditioning of animals to a trap is a key consideration in the trapping process" and that one of ordinary skill in the art "would have understood that a shift from a suspended trap (as in Jeong) to a corral-type trap (in TB1/TB2) would have fundamentally changed the conditioning requirements of the trap." *Id.* at 28. Therefore, Patent Owner argues that one of ordinary skill in the art "would have been discouraged from combining the features of Jeong into a corral trap, which would be incapable of offering the advantages provided by the suspended traps of Jeong []and would not benefit from Jeong's stated objective of 'real time monitoring of the approach of a wild animal.'" *Id.* Additionally, Patent Owner argues that one of ordinary skill in the art "would have had no expectation that the asserted combination would successfully maintain the functionality necessary to achieve the objectives of Jeong." *Id.*

Patent Owner asserts that Petitioner has engaged in "*ex post* reasoning and hindsight bias to impermissibly use the patent claims as a roadmap to reconstruct the claimed invention." PO Resp. 28–29. And Patent Owner reiterates that "no reference discloses detection of animals within a trap enclosure as required by the claims, much less the transmission of a wireless control signal (after receiving a wireless detection signal indicating the presence of animals within the trap enclosure)." *Id.* at 29.

In its Reply, Petitioner contends that Patent Owner seeks to "reformulate Petitioner's grounds, then argue against the reformulated

grounds" and "ignore the explicit teachings of Jeong." Pet. Reply 16. Petitioner explains that it "does not assert that it would [have] been obvious to modify the suspended trap of Jeong as alleged by [Patent Owner]." *Id.* Rather, "[w]hat Jeong actually teaches with respect to the type of physical trap utilized in its system is that a suspended net or cage are only ***examples*** of appropriate capture means," and that other types of capture means are expressly contemplated. *Id.* (citing Ex. 1005, 6). Petitioner asserts that "Jeong makes clear that a suspended net or cage type of [sic] is ***not*** essential to obtaining the benefits and advantages of the system described therein." *Id.* (citing Ex. 1005, 6). Thus, according to Petitioner, one of ordinary skill in the art would have "considered it entirely appropriate and beneficial to apply the teachings of Jeong with respect to remote monitoring and control to a corral-type trap." *Id.* at 16–17.

In its Sur-reply, Patent Owner contends that Petitioner fails to show that one of ordinary skill in the art would have reasonably expected success in modifying the TB1/TB2 corral trap to include the remote triggering of Jeong because "feral hogs were known to exhibit 'trap-shyness,' and were wary of entering corral traps like that of TB1/TB2." PO Sur-reply 18 (citing Ex. 2016 (West, Ben C. *et al.*, *Managing Wild Pigs, A Technical Guide* (2009)), 24–25); *see also id.* at 18–19 (citing Ex. 2006 (Gaskamp, Joshua Alden, *Use of Drop-Nets for Wild Pig Damage and Disease Abatement*, Master's Thesis (2012)), 32, 71). Patent Owner asserts that because "[r]educed effectiveness due to trap-shyness was inherent in the design of corral traps . . . [it] would thus remain a problem regardless of whether a given corral trap was animal-activated or controlled by a remote user," and, therefore, one of ordinary skill in the art "would not have reasonably

expected that modifying the corral trap of TB1/TB2 to include the remote triggering of Jeong would have addressed these trap-shyness issues." *Id.* at 18.

Additionally, Patent Owner points to arguments allegedly made by The Samuel Roberts Noble Foundation ("Noble Foundation"),[43] during prosecution of an unrelated patent application, directed to a modified version of a suspended trap that was elevated and allowed a remote user to remotely initiate captures. PO Sur-reply 18 (citing Ex. 2004 (excerpts of the prosecution history of U.S. Patent Application No. 13/396,452), 99–102, 329). Patent Owner contends that because the Noble Foundation argued that one of ordinary skill in the art would not have expected to successfully modify a corral trap by suspending the enclosure and incorporating remote user activation, Petitioner cannot argue here that one of ordinary skill in the art "***would have expected*** success in making the same modification two years earlier." *Id.* at 19.

We disagree with Patent Owner's arguments. Patent Owner reads Jeong too narrowly and misinterprets the modifications proposed by Petitioner. Regarding Jeong, Jeong teaches that "[t]he capture unit is a means for capturing a wild animal alive; *specific examples thereof may be a net or a cage* which is ordinarily used for the capture of wild animals." Ex. 1005, 6 (emphasis added). Jeong states that the "net or cage may be installed on top of a tree or an artificial pole or tower" and that it can be arranged in a configuration where a signal triggers a solenoid "which drops the net or cage from the tree or artificial pole or tower to capture the wild

[43] The Noble Foundation is listed as a real party in interest to Petitioner. Pet. 1.

animal." *Id.* "*However, this is only an example*, and the capture unit according to the present invention may be configured in a variety of ways." *Id.* (emphasis added). As reflected above, Jeong's disclosure of a net or cage installed on top of a tree is *one example* of a capture unit. Patent Owner has not identified and we do not discern anything in Jeong that would compel or otherwise induce one of ordinary skill in the art to understand that Jeong was limited to that one example. Thus, we decline Patent Owner's invitation to read Jeong as limited to suspension traps.

Additionally, Patent Owner's arguments, including those directed to conditioning and trap-shyness, fail to appreciate the modifications proposed by Petitioner. As previously noted, Petitioner's modifications take the teachings of a corral trap from TB1 and TB2 and modify the *corral trap* to include the remote control and detection aspects of Jeong. Petitioner's modifications have nothing whatsoever to do with a suspension trap or use thereof. The question is whether one of ordinary skill would have added the remote control and detection aspects of Jeong to TB1/TB2's corral trap. Conditioning and trap-shyness have nothing to do with the issue because Petitioner's combination starts with a corral trap and ends with a corral trap. Thus, whatever conditioning and trap-shyness issues are present with respect to corral traps, Petitioner does not contend that they are alleviated as a result of the modifications or that one of ordinary skill in the art would have been motivated to combine those teachings in order to address trap-shyness. Nor does eliminating trap-shyness have anything to do with whether one of ordinary skill in the art would have had a reasonable expectation of success. In short, those arguments by Patent Owner are essentially inapposite to the issues before us as they do not respond to Petitioner's proposed combination

and do not diminish the reasons offered by Petitioner as to why one of ordinary skill in the art would have been motivated to combine the teachings.

Further, we do not agree with Patent Owner that one of ordinary skill in the art would have been discouraged from combining the features of Jeong (on which Petitioner actually relies) with the corral trap of TB1 and TB2. Patent Owner's entire argument is based on the false premise that (a) Jeong is limited to suspension traps and (b) Petitioner is somehow taking aspects of a suspension trap and attempting to modify a corral trap. Neither is correct. As noted above, Jeong is not limited to suspension traps and the teachings of remote control and detecting from Jeong (on which Petitioner actually relies) are not dependent whatsoever on whether a trap is a suspension trap or a corral trap. Patent Owner fails to identify any evidence in Jeong (or TB1/TB2) that would discourage or otherwise lead one of ordinary skill in the art away from the combination proposed by Petitioner. *See In re Haruna*, 249 F.3d 1327, 1335 (Fed. Cir. 2001) ("A reference may be said to teach away when a person of ordinary skill, upon reading the reference . . . would be led in a direction divergent from the path that was taken by the applicant.") (quoting *Tec Air, Inc. v. Denso Mfg. Mich. Inc.*, 192 F.3d 1353, 1360 (Fed. Cir. 1999)); *see In re Fulton*, 391 F.3d 1195, 1201 (Fed. Cir. 2004) (holding that, to teach away, the prior art must "criticize, discredit, or otherwise discourage the solution claimed").

As discussed above, Patent Owner's argument also challenges whether Petitioner establishes that one of ordinary skill in the art would have had a reasonable expectation of success. Patent Owner's definition of success, however, again does not appear to track the modifications proposed

by Petitioner. In particular, Petitioner "substitut[es] the triggering mechanism and methodology of Jeong for the tripwire triggering mechanism known from the TexasBoars Combination" and asserts that such substitution "would yield predic[t]able results with a reasonable expectation of success." Pet. 28 (citing Ex. 1002 ¶ 110). The success identified by Petitioner is making the modifications proposed—substituting or adding the teachings of Jeong to TB1/TB2 to create a remotely controlled, detected corral trap. Nothing about these modifications has anything to do with trap-shyness or conditioning of the animals as Patent Owner contends. Rather, the success has to do with whether one of ordinary skill in the art would have had a reasonable expectation of success in achieving the combination. And, Petitioner's arguments are supported by Dr. Ditchkoff's testimony (Ex. 1002 ¶ 110) as well as Jeong itself because Jeong effectively takes a trap and adds the same features and method (remote control and detection) that Petitioner proposes to add to TB1 and TB2 (*see* Pet. 32 (relying on Jeong and the stated benefits therein)). Accordingly, we find that Petitioner has established sufficiently that one of ordinary skill in the art would have had a reason with rational underpinning to make the modifications proposed and would have had a reasonable expectation of success in so doing.

4. Wireless Signal Transmission[44]

Patent Owner challenges Petitioner's second alternative, which relies on Vorhies as teaching wireless signal transmission, contending that Petitioner "fails to articulate a rational basis for combining the references to provide wireless control or detection signals." PO Resp. 29–31 (emphasis

[44] This section only applies to Petitioner's second alternative, which relies on Vorhies as teachings wireless signal transmission.

omitted from heading). In particular, Patent Owner asserts that "Vorhies provides no disclosure of any signal from the remote receiver to the trap, and certainly does not disclose a wireless signal that initiates closure of the trap." *Id.* at 29–30. Patent Owner contends that one of ordinary skill in the art "would not have chosen to use wireless signals" in corral traps because one "would have expected that corral traps would be positioned in remote areas with limited or inconsistent wireless coverage, making wireless detection and control signals unreliable if not impossible in some locations." *Id.* at 30. Patent Owner asserts that "[w]hen considering the infrastructure and reliability issues of wireless communications, a [person of ordinary skill in the art] at the time of the invention would have been far more likely to use a hardwired connection for the camera." *Id.* Patent Owner argues that Petitioner's expert used a hardwired camera in conducting research (*id.* at 30–31 (citing Ex. 2039, 2 (Ditchkoff, Stephen S. *et al.*, *Reproduction in a Population of Wild Pigs (Sus scrofa) Subjected to Lethal Control*, The Journal of Wildlife Management, 76(6):1235–40 (2012)))), and "Jeong's disclosure, which requires continuous video transmissions, also confirms that a [person of ordinary skill in the art] would have expected that the Jeong system would require wired communications to allow the system to operate without disruption due to power or bandwidth limitations" (*id.* at 31 (citing Ex. 1005, 4; Ex. 1007 ¶¶ 1–2)).

In its Reply, Petitioner contends that "Vorhies teaches construction and functionality of a remotely monitored animal trap that includes [a] two-way electronic trap data communications module having a wireless signal transceiver that sends a wireless signal to a transceiver associated with a 'home base,' and *vic[e] versa*." Pet. Reply 7 (citing Ex. 1006, claim 3,

¶¶ 22–23, 25, 56, 86–87, Fig. 12b). Petitioner asserts that Dr. Nesbit admitted on cross-examination that the trap and home base of Vorhies are capable of two-way wireless transmission including the sending and receiving of trap sensor data, which includes date from a camera. *Id.* at 8 (citing Ex. 1023 (deposition transcript of Dr. Nesbit), 187:3–20, 190:4–21, 195:5–197:16). Thus, Petitioner asserts

> it would have been obvious to a [person of ordinary skill in the art] at the time of the invention, in view of Vorhies, to have (i) transmitted a ***wireless*** transmission signal (detection signal) from a wireless signal transmitting unit of the camera assembly to a wireless signal receiving unit associated with the remote control unit, and (ii) transmitted a ***wireless*** capture signal (control signal) from a wireless capture signal generating unit associated with the remote control, and receive this wireless signal at a wireless receiving unit associated with the capture unit, in order to facilitate the objective of remotely monitoring such wildlife traps, which are often located in remote areas, where connection to a hard wired network is either impractical or impossible. *See, e.g.*, [Ex. 1006], [0022]-[0023]; Ex.1002, ¶¶119-20. Whether ***Vorhies*** discloses or teaches a "control signal" is immaterial – this is clearly already disclosed by Jeong. The teachings of Vorhies are applied to modify the existing detection signal and capture signal mode of transmission, and [Patent Owner's] piecemeal arguments are unavailing. Moreover, the use of wireless control and monitoring signals to remotely actuate and monitor animal traps was well known to those in the art long before the effective filing date of the '228 Patent, as explained in the unrebutted testimony of Dr. Ditchkoff. Ex.1002, ¶¶62-66.

Pet. Reply 8–9.

Additionally, Petitioner asserts that Patent Owner's arguments are factually inaccurate and unsupported by any cited expert testimony or other evidence. Pet. Reply 9. In particular, Petitioner contends that "Vorhies discloses that both its trap and 'home base' are equipped with wireless

transceivers (6)" (*id.* (citing Ex. 1006 ¶ 86, Fig. 12b)), and "Vorhies does in fact teach sending wireless signals from its home base transceiver to the trap" (*id.* (citing Ex. 1006 ¶¶ 25, 87)). And Petitioner argues that "Jeong already discloses sending the claimed detection signals and control signals, Vorhies teaches modification of the mode of their transmission." *Id.*

Further, Petitioner contends that Patent Owner's infrastructure and reliability arguments "are nothing more than bald assertions" because Vorhies "discloses that signals can be generated and received by the transceivers 6 and the associated circuit[r]y, and makes no mention of external 'infrastructure.'" Pet. Reply 9–10.

In its Sur-reply, Patent Owner asserts that the prior art lacks any disclosure of a "***wireless control signal that springs the trap***." PO Sur-reply 14. Patent Owner contends that Jeong teaches a control signal that springs a trap, but that the signal is not wireless, whereas Vorhies does not teach any signal that springs a trap. *Id.* Patent Owner argues that "the simple fact that Vorhies discloses a form of wireless communication is not enough to teach that Jeong can be modified to provide a wireless control signal, particularly given the infrastructure and reliability issues of wireless communications at the time of the invention. *Id.* at 14–15 (citing Ex. 2002 ¶¶ 50, 67–70). Patent Owner thus asserts that Petitioner relies "on bare allegations of common sense and what was allegedly well known in the art (from its expert who is not a [person of ordinary skill in the art])[45] to provide a key claim element—a ***wireless control signal*** that triggers the trap—that

[45] We addressed Patent Owner's comment as to Dr. Ditchkoff's level of skill in our discussion of the ordinary level of skill in the art. *See supra* § I.G.2.

no asserted reference discloses." *Id.* at 15. Patent Owner contends that "[t]his is improper, and cannot support obviousness." *Id.*

We find that Petitioner establishes sufficiently that one of ordinary skill in the art would have been motivated to modify Jeong to use wireless signal transmission in light of Vorhies.[46] To begin, Petitioner's challenge is based on obviousness, not anticipation. Therefore, no *one* reference needs to disclose a wireless control signal in and of itself. In the context of Petitioner's second alternative, we find that Jeong discloses a control signal and Vorhies discloses wireless signal transmission, for the reasons explained by Petitioner, which are supported on the record before us. Additionally, Petitioner provides a reason with rational underpinning as to why one of ordinary skill in the art would have been motivated to modify Jeong's transmission signals (the control and detection signals) in light of Vorhies's disclosure of wireless signal transmission. This is not a stretch. Petitioner does not simply rely on a skilled artisan's common sense, although motivation to change a wired signal to a wireless signal would certainly seem to be a matter of common sense in many instances for a skilled artisan. Here, however, Petitioner provides explicit reasoning, not reliant on common sense. Particularly, some trap locations may be impractical or impossible to connect by a hardwired network. *See, e.g.*, Pet. 33 (stating the same). Even assuming wireless infrastructure is required, and assuming that one of ordinary skill in the art may desire to place a trap in an area that does not have such infrastructure, we do not find that such possibility would

[46] For clarity, we reiterate that this discussion involves Petitioner's second alternative in which Vorhies is relied on for wireless signal transmission. This argument by Patent Owner is inapplicable to Petitioner's first alternative, which does not rely on Vorhies.

otherwise negate motivation to modify a wired connection to a wireless connection in every instance. Clearly, one of ordinary skill in the art is not limited to placing traps only in areas without wireless infrastructure, even assuming such infrastructure is required. Even accepting Patent Owner's contention that one of ordinary skill in the art would have recognized that reliability issues can exist with wireless communications from remote locations, we do not find these shortcomings significantly undermine the evidence that a skilled artisan nevertheless would have known to use wireless communications with a camera assembly such as the one that Jeong discloses. We find persuasive Petitioner's argument that running a hardwire connection through potentially remote and distant areas can be impracticable and impossible, and therefore one of ordinary skill in the art would have had a reason to seek to modify Jeong's signal transmission. Further, Petitioner's argument is directly supported by Dr. Ditchkoff's testimony. *See, e.g.*, Ex. 1002 ¶ 120.

Additionally, we disagree with an underlying assumption made by Patent Owner in this argument—that Jeong's disclosure requires a continuous video transmission. As discussed above, in addition to Jeong's continuous mode, Petitioner also relies on *Jeong's sensor mode*. *See* Pet. 31 (relying on both disclosures). Thus, we also disagree with Patent Owner's argument because Jeong does not require a continuous mode of operation.[47]

For the reasons set forth above, we find that Petitioner establishes that one of ordinary skill in the art would have had a reason with rational

[47] And, as noted above, we only rely on Jeong's sensor mode in reaching our determination here.

underpinning to modify Jeong's signal transmission to be wireless in light of Vorhies.

5. Reasonable Expectation of Successful Wireless Signal Transmission

In an argument similar to that discussed just above, Patent Owner contends that one of ordinary skill in the art would not have been motivated to modify Jeong to provide a wireless detection signal. PO Resp. 31–33. Patent Owner's arguments focus on Vorhies's system and its operation and, again, contends that Vorhies lacks two-way communication. *Id.* at 32. Patent Owner also asserts that "the [radio frequency (RF)] transmissions of Vorhies are incompatible with the video transmissions required by Jeong" and one of ordinary skill in the art "would have had no reasonable expectation that the RF data transmission system would have been successful at transmitting the large video signals of Jeong." *Id.* Additionally, Patent Owner contends that one of ordinary skill in the art "would have only considered using communications systems that were known to accommodate the video signals disclosed by Jeong," that "the complexity of the components and infrastructure of Vorhies would further discourage a [person of ordinary skill in the art] from attempting to achieve such signal transmissions in a remote TB1-style trap (as modified by Jeong)," and "because the signal produced by Vorhies is directly triggered by closure of a trap," a person of ordinary skill in the art "would not have been motivated to simply substitute that signal for the Jeong signal, which is intended to allow a user to monitor the 'approach' of an animal prior to activation of the trap." *Id.* at 32–33.

In its Reply, Petitioner contends that Patent Owner's "arguments are conclusory and unsupported by any cited expert testimony or other evidence." Pet. Reply 10. Petitioner asserts that "these arguments [are] premised on the unsupported assertion that video signals cannot be sent by RF transmission, or are somehow incompatible therewith," and that these assertions "are demonstrably false." *Id.* (citing Ex. 1020 (FEMA Tech Note, Nov. 2008), 1). Petitioner points to Vorhies's teaching of polling a camera to ascertain the type of animal trapped after receiving a trip signal. *Id.* (citing Ex. 1006 ¶¶ 25, 86–87; Ex. 1020, 1).

Patent Owner's Sur-reply does not directly respond to Petitioner's Reply argument on these specific issues. Nonetheless, to the extent Patent Owner's arguments, reiterated above, apply, we have considered them as discussed above.

We disagree with Patent Owner's argument that one of ordinary skill in the art would not have had a reasonable expectation of successfully modifying Jeong's signal in light of Vorhies. Patent Owner's argument is directed, again, to Petitioner's second alternative that relies on Vorhies as disclosing wireless signal transmissions. In particular, Patent Owner's argument is unsupported on the record and we find Petitioner's evidence and argument supports that video signals can be transmitted by RF transmission for the reasons explained by Petitioner. And, we find Petitioner's argument and evidence persuasive for the reasons explained by Petitioner. Additionally, Patent Owner has not identified anything in Vorhies that would discourage one of ordinary skill in the art from using wireless signal transmission. For the same reasons, we also disagree with Patent Owner's argument regarding lack of reasonable expectation of success in modifying

Jeong to achieve wireless signal transmission. Rather, we find that Petitioner has established that one of ordinary skill in the art would have had a reasonable expectation of success in combining the references as proposed.

e) Summary of Limitation 1[f]

On the complete record before us and for each of the reasons discussed above, we find that Petitioner has shown that the combination of TB1, TB2, Jeong, and optionally Vorhies teaches or suggests limitation 1[f] and that one of ordinary skill in the art would have been motivated to combine the teachings of the references as proposed by Petitioner with a reasonable expectation of success.

viii. Limitation 1[g]

Limitations 1[f] and 1[g] include two recitations as to what the display device is "configured to" do. Limitation 1[f], discussed above, provides the first, reciting that the display device is configured to "receive a wireless detection signal from the camera assembly" and limitation 1[g] recites the second—"transmit a wireless control signal upon receipt of the wireless detection signal from the camera assembly, wherein the wireless control signal corresponds to an instruction to the control mechanism to generate the release signal." Ex. 1001, 8:8–12. As with limitation 1[f], Petitioner presents two alternative combinations of references. Pet. 33–36. In the first alternative, Petitioner relies upon Jeong as teaching or suggesting a "wireless control signal." *Id.* In the second alternative, Petitioner relies upon the combination of Jeong and Vorhies as teaching or suggesting a "wireless control signal." *Id.* at 36. For the same reasons discussed in the context of limitation 1[f], we find that Petitioner has established that both alternatives teach or suggest a "wireless control signal." And, as further explained

below, we find that Petitioner has established that in both alternatives, the wireless control signal (of Jeong alone or of Jeong as modified by Vorhies) corresponds to an instruction to the control mechanism to generate a release signal based on Jeong's teachings.

In both alternatives (whether relying on Jeong or Vorhies for wireless signal transmission), Petitioner argues that, as explained in regard to limitations 1[e] and 1[f], it would have been obvious in view of Jeong to have modified the TexasBoars Combination "to have provided the 'camera assembly,' the 'remote control unit' that reads on the claimed 'display device' and sends a capture signal (control signal), as well as the claimed 'control mechanism' (signal receiver, driving unit and solenoid)." Pet. 33–34 (citing Ex. 1002 ¶ 121).

Petitioner states Jeong explains that its "remote control unit" has a "capture signal transmitting unit" that transmits a signal for capture of the wild animal. Pet. 34; *see id.* at 23, 34 (citing Ex. 1005, 5; Ex. 1002 ¶¶ 100, 122). Petitioner also states that Jeong discloses that when "a capture signal is transmitted, . . . the driving unit triggers the capture unit according to the transmitted capture signal." *Id.* at 34–35 (citing Ex. 1005, 6; Ex. 1002 ¶ 123) (emphasis omitted). Petitioner further states that Jeong discloses "the driving unit can transmit a signal to a solenoid in order to activate the trap: 'a signal from the driving unit triggers a solenoid which drops the net or cage from the tree or artificial pole or tower to capture the wild animal.'" *Id.* at 35–36 (quoting Ex. 1005, 6) (citing Ex. 1002 ¶ 126). Thus, Petitioner contends Jeong discloses that "the control signal (capture signal) corresponds to an instruction to the control mechanism (signal receiver and

driving unit) to generate the release signal (signal from the driving unit operating the solenoid)." *Id.* at 36 (citing Ex. 1002 ¶ 127).

In the first alternative (not relying on Vorhies), Petitioner argues that a person of ordinary skill would have understood that "the control signal sent by the display device is wireless," for the same reasons explained in regard to the "wireless detection signal" of limitation 1[f]. Pet. 36 (citing Ex. 1002 ¶ 128).

In the second alternative (relying on Vorhies), Petitioner argues that it would have been obvious in view of Vorhies to have utilized "a wireless control signal (capture signal) generator associated with the display device (remote control unit), as well as a wireless control signal receiver associated with the capture unit," for the same reasons explained in regard to limitation 1[f] in connection with the wireless transmission signal generator and receiver. *Id.* (citing Ex. 1002 ¶ 129).

As explained in the context of limitation 1[f], Patent Owner contends that the references do not disclose a "wireless control signal." *See supra* § III.B.3.a.vii.; PO Resp. 14–19. In the context of limitation 1[f], we addressed Patent Owner's argument that Jeong does not teach a wireless control signal. *See supra* § III.B.3.a.vii.a. (addressing "wireless" and Patent Owner's arguments on pages 14–17 of the Patent Owner Response and related arguments in the Sur-reply). For the reasons explained there, on the complete record developed during trial, we find Petitioner's first alternative—that Jeong suggests a wireless control signal—persuasive.

Additionally, Patent Owner argues that a wireless control signal is not taught or suggested by the combination of Jeong and Vorhies (which is the second alternative proposed by Petitioner). PO Resp. 17–19. We fully

addressed Patent Owner's arguments in our discussion of limitation 1[f], and do not agree with Patent Owner's assertions. *See supra* § III.B.3.a.vii.b. (addressing Patent Owner's arguments as to whether the combination of Jeong and Vorhies teaches or suggests a wireless control signal). For the reasons explained there, on the complete record developed during trial, we find Petitioner's second alternative—that Jeong in combination with Vorhies teaches or suggests a wireless control signal—persuasive.

Further, Patent Owner raises another argument directed to the recitations of a "display device," "transmitter," and "control mechanism" that are dependent on Patent Owner's arguments challenging whether the combination teaches or suggests a "wireless control signal." PO Resp. 19. Specifically, Patent Owner contends "[s]ince the asserted references fail to disclose the 'wireless control signal,' they necessarily also fail to disclose a display device/transmitter that is configured to transmit the wireless control signal or a control mechanism that generates a release signal based on an instruction associated with the wireless control signal." *Id.*

Patent Owner's argument is contingent upon its arguments directed to "wireless control signal," which arguments we disagree with and have addressed above. Accordingly, for the same reasons discussed above and in our consideration of limitation 1[g], Petitioner has established that the combination of TB1, TB2, Jeong, and optionally Vorhies teaches or suggests these claim elements.

ix. Limitation 1[h]

Limitation 1[h] recites "wherein, upon detection of a presence of the plurality of feral pigs within the enclosure by the camera assembly, the camera assembly transmits the wireless detection signal to the display

device." Ex. 1001, 8:13–16. Petitioner contends that "the TexasBoars combination as modified by Jeong satisfies this limitation." Pet. 39.

a) The Parties' Arguments

Petitioner contends that Jeong discloses

> whereas the video capturing unit preferably monitors the site ***in real-time with continuous capture of video***, the present invention does not exclude a configuration wherein at least one ***detecting sensor for detecting the approach of a wild animal*** is installed, and wherein ***a signal from the at least one detecting sensor detecting the approach of a wild animal starts the video capturing unit, which then begins to capture video***.
>
> . . . .
>
> The transmission unit is a means for transmitting the situation of a wild animal captured by the video capturing unit to a remote control location, and preferably comprises ***a transmission signal generating unit*** *. . . and a transmission signal transmitting unit* which *transmits the signal generated at the transmission signal generating unit* to the remote control location . . .

Pet. 36–37 (quoting Ex. 1005, 5).

Petitioner argues, regarding Jeong, that "[b]oth the continuous monitoring mode, as well as the mode wherein operation of the camera assembly is triggered by the detection of wildlife, satisfies this limitation, pursuant to its plain and ordinary meaning." *Id.* at 37 (citing Ex. 1002 ¶¶ 130–131). Petitioner contends that in Jeong's continuous mode, "when a plurality of wild pigs are present within the trap, their images will be 'detected' by the camera, and then these detected images are transmitted to the remote control unit (display device) via the transmission signal generating unit and transmission signal transmitting unit of the camera assembly." *Id.* (citing Ex. 1002 ¶ 132). Alternatively, Petitioner asserts that,

in Jeong's sensor mode, the presence of wild pigs within the enclosure "will be detected, and camera operation will be initiated."[48] *Id.* (citing Ex. 1002 ¶ 133). Petitioner further asserts that the claim limitation does not require, the Specification does not support, and the district court refused to adopt a construction of this limitation in which "the camera assembly itself . . . detect[s] the presence of the plurality of wild pigs, or that the camera assembly determine[s] how many pigs are within the enclosure." *Id.* at 28 (citing Ex. 1011, 7–8; Ex. 1002 ¶ 134).

Additionally, Petitioner asserts that, consistent with the teachings of Jeong, one of ordinary skill in the art "would understand that one or more camera[s] mounted such that it monitors the 'site' of the trap encompasses monitoring the inside of the trap"; "[o]therwise, it would be impossible to carry out the objective of Jeong which is to increase the likelihood of capturing a wild animal through the direction of an operator, as opposed to conventional triggering mechanisms, such as a tripwire." *Id.* at 38–39 (citing Ex. 1005, Abstract, 5; Ex. 1002 ¶ 135). Petitioner contends that "[i]f the operator was blind to the interior of the trap, the system of Jeong would be even less effective than a tripwire." *Id.* at 39 (citing Ex. 1002 ¶ 135).

Patent Owner argues that "[t]he asserted references do not disclose 'detection of a presence of the plurality of [feral pigs/wild animals] within the enclosure by the camera assembly.'" PO Resp. 20 (emphasis omitted from subheading; second alteration by Patent Owner). Specifically, Patent Owner contends that "Jeong does not teach any signal—much less a wireless

[48] Petitioner asserts that "if the sensor or detector is configured to sense the presence of one animal, it is capable of sensing the presence of a plurality of animals." Pet. 37–38 (citing Ex. 1002 ¶ 133).

signal—that is sent *upon detection* of a presence of the plurality of feral pigs or wild animals *within the enclosure*." *Id.* Patent Owner asserts that neither of Jeong's embodiments—the continuous mode or the sensor mode—"provides a video capturing unit that detects the presence of animals ***within an enclosure*** as required by the claims." *Id.* Patent Owner contends that Jeong's system

> work[s] in one of two ways: (1) when a wild animal approaches ***the video capturing unit*** (not the enclosure), it is triggered and begins capturing video, and the signal triggers an alarm that notifies a monitoring person that an animal is approaching; or (2) the video capturing unit runs continuously and is monitored in real time. When the animal moves near the trap, a capture signal is sent and the trap is dropped onto the animal.

Id. at 21 (citing Ex. 1005, 6; Ex. 2002 ¶ 54). Thus, Patent Owner argues that "any 'detecting' that happens in Jeong occurs outside the trap (and when the animal approaches the video capture device), not when the animal is within an enclosure." *Id.* Patent Owner contends that this arrangement makes sense in Jeong because the only capture units disclosed are those suspended from a tree or pole and "[t]o make that work, the operator must see the animal's movement long before it enters into the trapping area so the release can be timed for when the animal actually enters the area where the trap will fall." *Id.* (citing Ex. 2002 ¶ 55).

Additionally, Patent Owner contends that "Jeong cannot disclose detection of the animal within an enclosure because Jeong does not disclose the required enclosure," and Dr. Ditchkoff confirmed, at his deposition, that "at the time the animal is detected (and video recording is triggered), the capture units disclosed by Jeong are suspended above the ground and have ***no contact with the ground whatsoever***." PO Resp. 21–22 (citing Ex. 2003

(deposition transcript of Dr. Ditchkoff), 199:23–203:16, 208:25–213:6). Patent Owner asserts that Petitioner's argument—that detection occurs when the camera is continuously monitoring the area—"requires an interpretation of 'wireless detection signal' that ignores both 'wireless' and 'detection.'" *Id.* at 22 (citing Pet. 37). "With continuous monitoring that occurs after the trap has captured an animal, there is no detection of the animal within an enclosure by the camera assembly; instead, the camera assembly simply transmits video of the area without any detection at all." *Id.* (citing Ex. 2002 ¶ 57).

Patent Owner also asserts that the Noble Foundation argued, during prosecution of an unrelated patent application, that its claims were patentable over Patent Owner's published application that discusses detection of animals within the enclosed trap area. PO Resp. 22–23 (citing Ex. 2004, 397–99; Ex. 2002 ¶ 58). Further, Patent Owner contends that it is improper for Petitioner to rely on Dr. Ditchkoff's testimony "in the absence of any teaching of detection of animals within an enclosure by a camera assembly." *Id.* at 23.

Also directed to limitation 1[h], Patent Owner contends that "Petitioner has not adequately explained why or how a [person of ordinary skill in the art] would have combined or modified the asserted references to detect a presence of animals within an enclosure." PO Resp. 33 (emphasis omitted from subheading). First, Patent Owner asserts that "even if the camera of Jeong were capable of monitoring the inside of a trap, the claims require that the camera *detect* animals *within* the trap—monitoring with a camera is not enough to meet the limitations of the claims." *Id.* at 34.

Second, Patent Owner argues that "in the context of Jeong, the only scenario where animals would be monitored within the trap is when the trap is in the closed position (and no longer suspended)." PO Resp. 34. According to Patent Owner, "this scenario would be inconsistent with the claim requirement that the control signal (that triggers the trap) be transmitted to the trap after the animals are detected within the enclosure." *Id.*

Third, Patent Owner contends that one of ordinary skill in the art "would have understood that the objective of Jeong—which includes 'real-time monitoring of the approach of a wild animal'—cannot be achieved unless the animal is detected outside of the enclosure." PO Resp. 34 (citing Ex. 1005, 3). Patent Owner argues that "the 'approach' can only be monitored if the animal is detected before reaching the trap area." *Id.* Patent Owner asserts that "[t]he Petition fails to explain why the [person of ordinary skill in the art] would have discarded the teachings of Jeong concerning monitoring of the 'approach' of an animal toward a trap area and instead detected a presence of an animal within the enclosure."

Thus, Patent Owner contends that

> [s]ince TB1, TB2, and Vorhies are silent with respect to the detection of animals by a camera assembly and Jeong specifically requires that detection of an animal occur before an animal reaches a trap area (and with the trap in a suspended position), it is improper to rely on the claims to provide a rationale for piecing together the references.

PO Resp. 35.

In its Reply, Petitioner raises four arguments in response. First, Jeong's capture unit is not limited to a net or cage suspended from a pole or tower. Pet. Reply 11–12 (citing Ex. 1005, 6).

Second, "Jeong teaches monitoring the 'site' of the trap." Pet. Reply 12. "When combined with the corral trap of TB1/TB[2], a [person of ordinary skill in the art] would interpret and apply this teaching so as to encompass detection of animals that are within the enclosure by the camera assembly, which is clearly part of the 'site' of the corral trap." *Id.* (citing Pet. 38–39; Ex. 1002 ¶ 135; Ex. 2023 (2016 Landowner's Guide for Wild Pig Management), 53 (App. V (Monitoring Pig Traps and Strategic Baiting))).

Third, relying on Dr. Ditchkoff's testimony, Petitioner contends that "what Jeong teaches is that the operator must be able to see the target animal ***when it is in a position such that it can be trapped***." Pet. Reply 12–13 (citing Ex. 2003, 206:14–21). Petitioner asserts that Patent Owner and Dr. Nesbit recognize this teaching of Jeong by acknowledging that the operator must see the animal's movement when the animal actually enters the area where the trap will fall. *Id.* at 13 (citing PO Resp. 21–22; Ex. 2002 ¶ 55). Petitioner argues that, in light of Jeong, one of ordinary skill in the art "would have modified the corral trap of TB1/TB2 with a camera assembly capable of detecting the target animals ***when they are in a position such that they can be trapped*** – *i.e.*, ***within the corral trap enclosure***." *Id.* (citing Ex. 2023, 53 (App. V)). Petitioner asserts that "[o]therwise, it would be impossible to carry out the objective of Jeong which is to increase the likelihood of capturing a wild animal through the direction of an operator, as opposed to conventional triggering mechanisms, such as a tripwire." *Id.* (citing Ex. 1002 ¶ 135). Thus, according to Petitioner, "the TB1/TB2 combination as modified by Jeong satisfies this limitation." *Id.*

Fourth, Petitioner contends that whatever arguments the Noble Foundation raised during prosecution were made by another party in an unrelated patent application, cannot be attributed to Petitioner, and are not relevant to consideration of the issues in this proceeding. Pet. Reply 13–14. Additionally, Petitioner argues that the Challenged Claims are "open 'comprising' claims" and "only ***require*** detection of the target animals within an enclosure, but certainly a teaching of detection in areas of the trapping site outside of the enclosure, ***as well as*** detection in the inside of the enclosure, reads on and satisfies this aspect of the claims." *Id.* at 14 (citing Ex. 2023, 53 (App. V)).

In its Sur-reply, Patent Owner asserts that "[t]he claimed trap includes a camera that ***detects when animals are within the trapping enclosure***, then sends a ***wireless detection signal*** to a user's device. The user can then transmit a ***wireless control signal*** from the device that instructs the trap to close." PO Sur-reply 7–8. In other words, each claim "recites camera detection of animals ***within an open trapping enclosure***, followed by transmission of a ***wireless detection signal*** to a user's device, followed by transmission of a ***wireless control signal*** to close the trap." *Id.* at 8.

First, Patent Owner contends that Petitioner "cannot prove obviousness because it has not identified any reference that discloses detecting animals ***within a trapping enclosure*** before activating the trap." PO Sur-reply 8. Patent Owner asserts that (a) "TB1/TB2 provide no animal detection," and (b) "Jeong does not disclose an enclosure at all." *Id.* "Since Jeong's trap does not disclose an 'enclosure,' it cannot teach detection of animals 'within' an enclosure." *Id.*

Second, Patent Owner argues that "Jeong clearly teaches detection ***somewhere other than*** within an enclosure" because Jeong states that when an animal approaches a position where a video capturing unit is installed, the unit is triggered, which triggers an alarm and notifies a monitoring person of the "***approach of the wild animal***" to the video unit. PO Sur-reply 8–9 (citing Ex. 1005, 5). Thus, Patent Owner contends "Jeong only discloses camera detection 'when a wild animal ***approaches***' a camera." *Id.* at 9 (citing Ex. 1005, 5; PO Resp. 20–21; Ex. 2002 ¶¶ 55, 78).

Third, Patent Owner asserts that one of ordinary skill in the art "would have recognized that detecting an animal when it ***approaches a camera*** is very different from detecting a plurality of animals when they are ***within a trapping enclosure***, particularly where Jeong's only traps have no contact with the ground." PO Sur-reply 9 (citing Ex. 2002 ¶¶ 19, 23, 53–55). Patent Owner argues that this difference was recognized by the Noble Foundation when arguing its patent application and that those arguments contradict the arguments Petitioner presents here. *Id.* at 9–10 (citing Ex. 2004, 99–102, 329).

Fourth, Patent Owner contends that "Petitioner also misstates what Jeong actually discloses (detection 'when a wild animal ***approaches***' the camera) in favor of what Petitioner wishes Jeong disclosed ('detecting the target animals when they are in a position such that they can be trapped')." PO Sur-reply 10 (citing Pet. Reply 12–13, 18–19). Patent Owner asserts that "Jeong only discloses the detection of animals as they approach a camera's position, followed by monitoring of the approach of the animal until the animal reaches a location near the suspended capture unit, which may never occur." *Id.* (citing Ex. 1005, 3–5).

Fifth, Patent Owner argues that Jeong would not have motivated one of ordinary skill in the art to modify TB1/TB2 to include detection of animals within a corral trap's enclosure "[b]ecause Jeong does not disclose detection within an enclosure."[49] PO Sur-reply 10–11 (citing Ex. 1005, 3–5). Patent Owner contends that its argument would not make it impossible to carry out the objectives of Jeong because Jeong's objective is to monitor *the approach* of a wild animal *before* it reaches the location of a suspension trap. *Id.* at 11–12 (citing Pet. Reply 13; Ex. 1005, 3). Patent Owner asserts that "[i]n the absence of any disclosure of detection of animals within an open trap enclosure, Petitioner essentially is left relying on 'basic knowledge' or 'common sense' to establish the evidentiary basis needed to cure the deficiencies of the cited references," which "cannot support Petitioner's case." *Id.* at 12.

Patent Owner's Sur-reply also argues (under a different subheading) that Petitioner "cannot prove obviousness because it has not identified any reference that discloses transmitting **a *wireless detection signal*** after animals are detected within a trapping enclosure." PO Sur-reply 12. Patent Owner contends that, "[a]s discussed above, TB1/TB2 in view of Jeong does not disclose or suggest detection of animals within an open trapping enclosure." *Id.* "Thus, as a threshold matter, TB1/TB2 in view of Jeong cannot teach or suggest transmitting a ***wireless detection signal*** after animals are ***detected within a trapping enclosure***" as required by the claims. *Id.* at 12–13.

---

[49] Patent Owner also asserts that Petitioner mischaracterizes Patent Owner's position because Patent Owner does not assert that Jeong's monitoring person will see the animal's movement in the area where the trap will fall. PO Sur-reply 11 (citing Pet. Reply 13; PO Resp. 21).

b) Discussion

We find that Petitioner sufficiently establishes that the combination of TB1, TB2, Jeong, and optionally Vorhies teaches or suggests limitation 1[h]. We have addressed many of Patent Owner's arguments in the context of our discussion of limitation 1[f] (wireless detection signal) as Patent Owner argued against the combination of teachings applied to that limitation of claim 1. Here, Patent Owner argues the teachings of the references *individually* and seeks to draw a distinction between *when/where* an animal is detected, but fails to appreciate how one of ordinary skill in the art would have combined the teachings of the references.

Limitation 1[h] states that "upon detection of a presence of the plurality of feral pigs within the enclosure by the camera assembly, the camera assembly transmits the wireless detection signal to the display device." There is no dispute that Jeong's video capture unit transmits a signal to Jeong's monitor (display device). We have addressed Patent Owner's arguments pertaining to wireless signal transmission and, as noted above, we find that Petitioner has established that Jeong, optionally as modified with Vorhies, teaches or suggests transmission of wireless control and detection signals. Limitation 1[h] recites that the camera assembly detects the presence of the plurality of feral pigs. As discussed in the context of limitation 1[f], when Jeong is operated in sensor mode, Jeong's detecting sensor detects the approach of an animal to the sensor/video capturing unit and triggers the video capturing unit to start to capture video. Petitioner maps, *inter alia*, Jeong's detecting sensor and video capture unit to the recited camera assembly. *See* Pet. 29–30 (including Jeong's sensor unit). Thus, we find (and do not understand Patent Owner to contest), that

Jeong's video capture unit/detecting sensor (i.e., camera assembly) detects a wild animal and is capable of detecting a plurality of feral pigs.

Despite the extensive discussion of the parties' arguments above, Patent Owner's arguments are focused on whether Jeong teaches a camera assembly that detects the presence of a plurality of feral pigs *within an enclosure*. As discussed above, Petitioner does not rely on Jeong as teaching the enclosure recited by claim 1; rather, Petitioner relies on the TexasBoars Combination (TB1/TB2) as teaching an enclosure of a corral trap. *See supra* §§ III.B.3.a.ii.–III.B.3.a.v.; *see also, e.g.*, Pet. 18–22 (limitations 1[a]–1[d]). Thus, in the combination proposed, Jeong's system is added to a corral trap, such as the TexasBoars Combination's trap. As we discuss in limitation 1[f],[50] Jeong's video capturing unit/detecting sensor detects the approach of an animal *to the video unit/sensor*. Although Jeong discloses a suspension trap *as an example* of a capture unit, Jeong is not limited to only suspension traps (as reflected in Jeong's description and claims). And, for the reasons explained in our discussion of limitation 1[f], Petitioner has shown persuasively that the difference between the detecting recited in the Challenged Claims as compared to Jeong is solely derived from the placement of the camera assembly (as opposed to any structural or functional difference in the methods). Additionally, we agree with Petitioner and find that one of ordinary skill in the art would have understood that at least *a purpose*, if not *the main purpose*, of Jeong and the corral trap of the TexasBoars Combination is actually to capture an animal.

---

[50] Our discussion of Patent Owner's arguments as to motivation and reasonable expectation of success addressed in the context of limitation 1[f] apply equally here and we thus rely upon and incorporate our discussion thereof here.

Thus, we agree with Petitioner that one of ordinary skill in the art would have been motivated to apply Jeong's system to a corral trap such that the camera assembly (e.g., video capturing unit/detecting sensor) is placed in a position where, when it detects *the approach* of an animal to the camera assembly, *the detection occurs when the animal is in a position to be captured—within an enclosure*. *See* Pet. Reply 11–14; *see also* Ex. 1002 ¶ 135.

As noted above in our discussion of limitation 1[f], we credit Dr. Ditchkoff's testimony that one of ordinary skill in the art would have understood that if the operation of the camera is triggered by a sensor or detector when a plurality of feral pigs are present within the enclosure, their presence will be detected and camera operation initiated. *See* Ex. 1002 ¶¶ 133–135. Thus, we find that one of ordinary skill in the art would have been motivated to combine the teachings of the references as proposed by Petitioner and would have had a reasonable expectation of success in so doing.

Accordingly, on the complete record before us, we find that Petitioner has shown sufficiently that the combination of TB1, TB2, Jeong, and optionally Vorhies, teaches or suggests the subject matter of limitation 1[h].[51]

x. Summary as to Claim 1

For the reasons discussed above, Petitioner has sufficiently shown that the combination of TB1, TB2, Jeong, and optionally Vorhies teaches or suggests the subject matter of claim 1 and has provided sufficient reasoning

[51] In this discussion, we rely on Jeong's sensor mode of operation for the reasons discussed above.

with rational underpinning for combining these references in the manner proposed with a reasonable expectation of success.

b. Independent Claim 14

Claim 14 is directed to "[a] method for capturing a plurality of wild animals" and recites limitations that are substantially the same as those recited in claim 1. Ex. 1001, 8:53–9:22. The parties rely on substantially the same arguments and evidence discussed in the context of claim 1. *See* Pet. 41–46 (relying on the discussion of claim 1); PO Resp. 13–35 (arguing claims 1 and 14 together). In addition, Petitioner expressly addresses the limitations of claim 14 that are not also recited by claim 1. *See, e.g.*, Pet. 41–42 (limitation 14[b]), 42–43 (limitation 14[c]), 44–45 (limitation 14[g]).[52]

Patent Owner argues claims 1 and 14 together and does not raise additional argument or evidence directed to claim 14 beyond the arguments and evidence we address above in the context of claim 1. PO Resp. 13–35.

On the full record before us, we find Petitioner's arguments and evidence persuasive to show that the combination of TB1, TB2, Jeong, and optionally Vorhies teaches or suggests the subject matter of claim 14 for the reasons explained above in the context of claim 1 and for the reasons

[52] In particular, we note that claim 14 is a method for capturing a plurality of *wild animals* (as compared to claim 1, which is a method for capturing a plurality of feral pigs) and recites a "transmitter" in lieu of the "display device" recited in claim 1. These differences (although not significant in light of Petitioner's analysis) and Patent Owner's argument of claims 1 and 14 together (as noted below) explain why Patent Owner includes phrases such as "feral pigs/wild animals" and "display device/transmitter" in several of its arguments discussed above in the context of claim 1. *See, e.g.*, PO Resp. 20 ("[feral pigs/wild animals]"), 23 ("[*display device/transmitter*]").

explained by Petitioner with respect to the limitations of claim 14 that are not also recited by claim 1. Accordingly, we find that Petitioner has established that the combination of TB1, TB2, Jeong, and optionally Vorhies teaches or suggests the subject matter of claim 14 and that one of ordinary skill in the art would have been motivated to combine the teachings of the references with a reasonable expectation of success in so doing.

c. Dependent Claims 2, 3, 13, 15–17, 26, and 27

Claims 2, 3, and 13 depend from claim 1, and claims 15–17, 26, and 27 depend from claim 14. Petitioner provides a detailed discussion of each dependent claim, including argument and evidence identifying where the subject matter is taught or suggested by the combination of TB1, TB2, Jeong, and optionally Vorhies, and also provides reasons with rational underpinning as to why one of ordinary skill in the art would have been motivated to modify or combine the references as proposed with a reasonable expectation of success in so doing. Pet. 39–41 (addressing claims 2, 3, and 13), 46–47 (addressing claims 15–17, 26, and 27).

Patent Owner's sole argument directed specifically to any of these dependent claims is a single sentence directed to claims 3 and 17: "Since the asserted references fail to disclose detection [feral pigs/wild animals] within the enclosure by a camera assembly, the asserted references also fail to disclose the transmission of images of the ***detected*** animals within the enclosure to the [display device/transmitter]." PO Resp. 35 (alterations by Patent Owner). Thus, Patent Owner's argument is contingent upon acceptance of Patent Owner's arguments and evidence directed to claims 1 and 14.

For the reasons discussed above in the context of claim 1, we disagree with Patent Owner that the combination of references fails to teach or suggest detection of feral pigs/wild animals within the enclosure by a camera assembly, and, therefore, we disagree with Patent Owner's argument directed to dependent claims 3 and 17.

On the full record before us and based on the arguments and evidence presented by Petitioner (*see* Pet. 39–41, 46–47), we find that Petitioner has established that the combination of TB1, TB2, Jeong, and optionally Vorhies teaches or suggests the subject matter of claims 2, 3, 13, 15–17, 26, and 27, and that one of ordinary skill in the art would have been motivated to combine the teachings of the references with a reasonable expectation of success in so doing.

C. Ground 2: Obviousness over TB1, TB2, Jeong, Optionally Vorhies, and Silsby

Petitioner contends that the combination of TB1, TB2, Jeong, optionally Vorhies, and Silsby would have rendered the subject matter of dependent claims 4–9, 18–20, 24, and 25 obvious to one of ordinary skill in the art at the time of the invention. Pet. 47–57.

1. Scope and Content of the Prior Art

a. Silsby

Silsby is titled "Motion Detecting Camera System." Ex. 1007, code (54). Silsby discloses a motion detecting camera system comprising a "motion detection device having an image sensor for detecting motion within a field of view of the motion detection device and automatically generating a digital image of a scene within the field of view . . . [and] a cellular telephone transmitter." *Id.* at code (57). Silsby explains that "[t]he

motion detection device is configured to automatically transmit the digital image via the transmitter to the base unit for display on the display screen." *Id.* ¶ 4.

Figure 1 of Silsby is reproduced below.

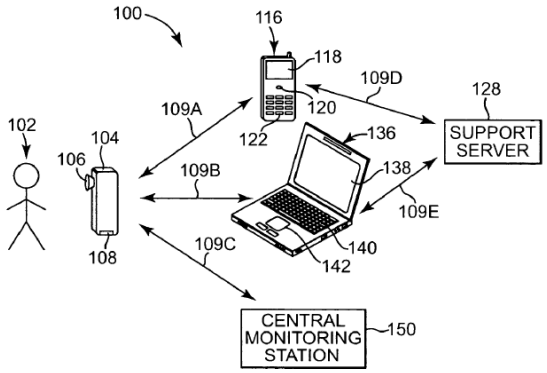

Fig. 1

Figure 1 of Silsby is a diagram illustrating a motion detecting camera system according to one embodiment of the invention. Ex. 1007 ¶ 5. Figure 1 depicts motion detecting camera system 100 comprising portable motion detection device 104, base units 116 and 136, support server 128, and central monitoring station 150. *Id.* ¶ 9.

Silsby states that in one embodiment, motion detection device 104 and base unit 116 are "cellular telephone devices that have the same size as conventional cellular telephones," and base unit 136 is a laptop computer. Ex. 1007 ¶ 9. Silsby discloses that motion detection device 104 is placed at any desired location by a user to sample scene 102 and, if the scene changes significantly, indicating that motion has occurred, motion detection device 104 wirelessly transmits one or more digital images of scene 102 to one or more of base unit 116, base unit 136, and central monitoring station 150. *Id.* ¶ 11. Silsby also discloses that images received by cellular telephone base unit 116 and laptop computer base unit 136 are "displayed on

display screens 118 and 138, respectively." *Id.* Silsby explains that "[i]n this manner, motion detecting camera system 100 allows a user to remotely and wirelessly monitor any desired location, and view images of events that have triggered motion detection indication." *Id.*

2. Differences Between the Prior Art and the Claims; Motivation to Modify

Patent Owner contends that Silsby does not disclose the "key limitations of Claims 1 and 14 that—as discussed *supra* in Part 6.B—are not disclosed by TB1, TB2, Jeong, or Vorhies." PO Resp. 35–36. For the reasons discussed above in the context of claim 1, we disagree with Patent Owner's arguments.

Additionally, Patent Owner asserts that "there is no disclosure in Silsby of a 'control signal' that effects closure of a trap as required by the claims." PO Resp. 36. As Petitioner explains in its Reply, Petitioner relies on Jeong, not Silsby, as teaching a control signal that effects closure of a trap. Pet. Reply 17. Therefore, we find that Patent Owner's argument does not detract from Petitioner's challenge because the argument does not respond to the combination proposed by Petitioner.

a. Claims 8, 9, 20, and 25

Petitioner provides a detailed discussion of each of these claims, including argument and evidence identifying where the subject matter is taught or suggested by the combination of TB1, TB2, Jeong, optionally Vorhies, and Silsby, and also provides reasons with rational underpinning as to why one of ordinary skill in the art would have been motivated to modify or combine the references as proposed with a reasonable expectation of

success in so doing. Pet. 53–54 (claim 8), 54–56 (claim 9), 56 (claim 20), 57 (claim 25).

Patent Owner does not raise any argument directed specifically to these claims apart from the two arguments addressed just above, which arguments apply to Ground 2 generally. *See* PO Resp. 35–36; *see generally id.* at 35–38 (addressing Ground 2).

We find Petitioner's arguments as to claims 8, 9, 20, and 25 persuasive and supported sufficiently on the complete record before us, and, therefore, we adopt them as our own findings. Accordingly, for the reasons explained by Petitioner, we find that the combination of TB1, TB2, Jeong, optionally Vorhies, and Silsby teaches or suggests the subject matter of claims 8, 9, 20, and 25, and that one of ordinary skill in the art would have been motivated to combine the teachings of the references with a reasonable expectation of success in so doing.

b. Claims 4 and 18

Claim 4 depends from claim 3 (which depends from claim 1) and further recites "wherein the display device is a wireless handheld device." Ex. 1001, 8:23–24. Claim 18 depends from claim 16 (which depends from claim 14). Claim 16 further recites "wherein the transmitter comprises a display device." Ex. 1001, 9:26–27. Claim 18, further recites "wherein the display device is a wireless handheld device." *Id.* at 9:31–32. Thus, each of claims 4 and 18 recite "wherein the display device is a wireless handheld device." Petitioner sets forth the arguments and evidence below in the context of claim 4, but relies on the same for claim 18. *See* Pet. 49–51 (claim 4), 56 (relying on the discussion of claim 4 when addressing claim 18).

Petitioner contends that "Jeong does not explicitly disclose that its 'remote control unit' can be in the form of or include a wireless handheld device," but "Silsby discloses a motion detecting camera system that includes the use of a cellular telephone (wireless handheld device) as a base unit." Pet. 49 (citing Ex. 1002 ¶¶ 165–166). Petitioner asserts that Silsby's "cellular phone 116 includes a display 118 for displaying the images captured by the motion detection device 104 that includes a camera." *Id.* (citing Ex. 1007 ¶ 11).

Additionally, Petitioner contends that "cellular phone 116 includes input devices 120, 122, and can provide input to the motion detection device 104 including a camera through a communications link 109A." Pet. 49 (citing Ex. 1007 ¶¶ 9–11, 13; Ex. 1002 ¶¶ 167). And, Petitioner asserts that "Silsby teaches that the arrangement 100 is configured such that the cellular phone 116 can provide input to the motion detecting camera 104 over a cellular network communications link 109A, and via an input/output interface 108 and cellular communications interface 210 of the motion detecting camera device 104." *Id.* at 50 (citing Ex. 1007 ¶¶ 10, 13, 21, 24, 31; Ex. 1002 ¶ 168). Petitioner also contends that Silsby "teaches that the use of a cellular telephone as a 'base unit' in communication with a motion detecting camera provides a number of benefits and advantages," including that cellular telephones are easy to use, reliable, and easy to set up. *Id.* at 50–51 (citing Ex. 1007 ¶ 33; Ex. 1002 ¶ 169).

Petitioner asserts that it would have been obvious to one of ordinary skill in the art to have "provided the remote control unit of Jeong in the form of, or including, a cellular phone in order to provide a simple, reliable,

portable and easy to use technique for monitoring and controlling the remotely managed trapping system." Pet. 51 (citing Ex. 1002 ¶ 170).

In its Response, Patent Owner asserts that "the references do not provide a sufficient motivation for using a 'display device' that is a 'wireless handheld device.'" PO Resp. 36 (emphasis omitted from subheading). In particular, Patent Owner contends that "Silsby explains that security camera systems that record video often consume large amounts of power" and, thus, Silsby teaches "a 'low cost and very low power motion camera system . . . based on cell phone technology.'" *Id.* (citing Ex. 1007 ¶¶ 1–2, 33–34). Patent Owner asserts that, in light of Silsby's teachings, one of ordinary skill in the art "would have recognized the significant power and bandwidth required for Jeong's video transmissions, and . . . would have had no reason to expect that the video signals of Jeong could be successfully transmitted to a cellular phone as in Silsby." *Id.* at 36–37.

In its Reply, Petitioner contends that "Silsby teaches that its system can not only operate by sending video to a base unit (e.g. cell phone) upon the detection of motion by a motion sensor (Ex.1007, [0010]), but that it can also operate by continuously streaming video of the scene being viewed by the camera." Pet. Reply 17 (citing Ex. 1007 ¶ 31). Petitioner asserts that "[t]his is precisely how Jeong describes the alternative modes of operation of its camera assembly." *Id.*

In its Sur-reply, Patent Owner addresses Petitioner's Grounds 2–4 together. *See* PO Sur-reply 19–20. Patent Owner's arguments focus on low-power operations and conserving power (in the context of later grounds based on Kimura) as compared to the allegedly high-energy, high-bandwidth video recordings of Jeong. *Id.* at 20. We address Patent Owner's arguments

here as this is the first claim to which they apply, but the discussion below applies to each of Grounds 2–4. In particular, Patent Owner asserts that one of ordinary skill in the art would have understood Silsby as designed for low-power wireless and cellular transmissions and would not have been motivated to combine the transmission method of Silsby with Jeong, which Patent Owner contends "requir[es] continuous capture and transmission of high-energy, high-bandwidth video recordings" and would not "have expected such a combination would succeed." *Id.*

We find Petitioner's argument and evidence persuasive. In particular, the limitations of claims 4 and 18 are taught by the combination proposed and, as set forth above, Petitioner presents a reason with rational underpinning as to why one of ordinary skill in the art would have been motivated to combine the references with a reasonable expectation of success. Additionally, Patent Owner's argument fails to appreciate that Silsby expressly discloses operating in two modes—a "motion detection mode" and a "remote viewing mode." Ex. 1007 ¶ 31. As discussed above in the context of Ground 1, Jeong also discloses two modes, which we have referred to as a "continuous mode" and a "sensor mode." Although Patent Owner points to Dr. Nesbit's testimony, we do not agree with the opinions presented by Dr. Nesbit in this regard given that Silsby and Jeong each have two of the same modes of operation and Jeong is not required to operate in continuous mode. Thus, we do not agree with Patent Owner that one of ordinary skill in the art would not have been motivated to combine the teachings as proposed or that such combination would not be reasonably likely to succeed.

Accordingly, on the full record before us, we find that Petitioner has established that the combination of TB1, TB2, Jeong, optionally Vorhies, and Silsby teaches or suggests the subject matter of claims 4 and 18, and that one of ordinary skill in the art would have been motivated to combine the teachings of TB1, TB2, Jeong, optionally Vorhies, and Silsby and would have had a reasonable expectation of success in so doing.

c. Claims 5, 6, and 19

Claim 5 depends from claim 4 and further recites "wherein the wireless handheld device is a cellular telephone." Ex. 1001, 8:25–26. Claim 6 depends from claim 5 and further recites "wherein the wireless detection signal and the wireless control signal are transmitted via a cellular network." *Id.* at 8:27–29. Claim 19 depends from claim 18 and further recites "wherein the wireless handheld device is a cellular telephone." *Id.* at 9:33–34.

Regarding claim 5, Petitioner relies on its arguments and evidence directed to claim 4, including that "Silsby's base unit 116 is a cellular telephone." Pet. 51 (citing Ex. 1002 ¶ 171).

Regarding claim 6, Petitioner contends "Silsby teaches the use of a cellular network and cellular communications link 109A to permit operation of the cellular telephone base unit 116." Pet. 51 (citing Ex. 1007 ¶ 10) (also referring to the Petition's discussion of claim 4). Petitioner asserts that it would have been obvious to one of ordinary skill in the art, as explained in the context of claim 4, "to transmit the wireless detection signal and wireless control signal as set forth in Jeong by a cellular network as taught by Silsby, having the remote control unit of Jeong in the form of a cellphone as taught by Silsby." *Id.* at 51–52 (citing Ex. 1002 ¶ 172).

Regarding claim 19, Petitioner relies on its arguments and evidence directed to claim 18 (which relies upon the arguments and evidence directed to claim 4), including that "Silsby's base unit 116 is a cellular telephone." Pet. 56 (citing Ex. 1002 ¶ 185).

Patent Owner argues claims 5, 6, and 19 together, asserting that "the references do not provide sufficient motivation for transmitting a 'wireless control signal' using a cellular network." PO Resp. 37 (emphasis omitted from subheading). In particular, Patent Owner contends that one of ordinary skill in the art: (1) "would not have had a reasonable expectation that the cellular communications disclosed in Silsby would have successfully accommodated the video transmissions required by Jeong" and (2) "would not have understood Silsby to support the control of a remote physical device after receiving a signal through a cellular network, and therefore would not be motivated to modify Jeong based on Silsby."[53] *Id.*

In its Reply, Petitioner contends that "the base combination of TB1/TB2, Jeong, and optionally Vorhies discloses and suggests the wireless transmission of a control signal (capture signal) from a remote control unit to a capture unit. Silsby is applied in a manner that modifies the mode of transmission of this signal." Pet. Reply 17–18. Petitioner asserts that "[t]here is absolutely nothing in Silsby that would discourage one of ordinary skill in the art from the transmission of the control signal through a cellular network to control the operation of the trap." *Id.* at 18. Rather, "Silsby is clear that its base station (e.g. cell phone) is perfectly capable of

[53] As noted above, Patent Owner's Sur-reply addresses Grounds 2–4 together and we have explained why we do not agree with the positions raised therein.

providing input signals through a cellular network to perform various control functions." *Id.* (citing Ex. 1007 ¶¶ 9–11, 13, 21, 24, 31).

We find Petitioner's argument and evidence persuasive for the reasons explained by Petitioner. In particular, the limitations of claims 5, 6, and 19 are taught by the combination proposed and, as set forth above, Petitioner presents a reason with rational underpinning as to why one of ordinary skill in the art would have been motivated to combine the references with a reasonable expectation of success. Additionally, Patent Owner's argument fails for the same reasons discussed in the context of claim 4. Thus, we do not agree with Patent Owner that one of ordinary skill in the art would not have been motivated to combine the teachings as proposed or that such combination would not have been reasonably likely to succeed.

Accordingly, on the full record before us, we find that Petitioner has established that the combination of TB1, TB2, Jeong, optionally Vorhies, and Silsby teaches or suggests the subject matter of claims 5, 6, and 19, and that one of ordinary skill in the art would have been motivated to combine the teachings of TB1, TB2, Jeong, optionally Vorhies, and Silsby and would have had a reasonable expectation of success in so doing.

d. Claims 7 and 24

Claim 7 depends from claim 1 and further recites "wherein the camera assembly comprises a motion sensor that is configured to sense the presence of a plurality of feral pigs within the enclosure." Ex. 1001, 8:30–32. Claim 24 depends from claim 14 and further recites "wherein the camera assembly comprises a motion sensor that is configured to sense the presence of the plurality of wild animals within the enclosure." *Id.* at 9:46–49.

Petitioner contends that although "Jeong discloses a system that includes a video capturing unit, wherein the 'video capturing unit is characterized in that it is further equipped with at least one detecting sensor unit which detects the approach of a wild animal,'" "Jeong does not explicitly state that the 'sensor' is a motion sensor."[54] Pet. 52 (citing Ex. 1005, 5). Petitioner asserts that Silsby teaches the use of a camera system that includes "'a portable motion detection device having an image sensor for detecting motion within a field of view.'" *Id.* (quoting Ex. 1008 ¶ 4). Petitioner argues that "Silsby teaches that it[s] camera system, which utilizes motion sensing advantageously[,] reduces power consumption and recording space" and also "teaches a number of techniques for determining whether motion has occurred that are 'configured to sense the presence of the plurality of feral pigs within the enclosure.'" *Id.* at 52–53 (citing Ex. 1007 ¶¶ 2–3); *see id.* at 53 (noting that Silsby teaches identifying changes between two successive images and quantifying the amount of change) (citing Ex. 1008 ¶¶ 18–20; Ex. 1002 ¶ 176).

Petitioner contends that it would have been obvious to one of ordinary skill in the art "to have utilized a motion sensor in the system taught by Jeong that is configured to sense the presence of the plurality of wild pigs within the enclosure as an effective means of detecting wildlife, and provide the system with reduced power consumption and reduced recording space usage." Pet. 53 (citing Ex. 1002 ¶¶ 177).

---

[54] Petitioner raises these arguments in addressing claim 7 and relies on the same in addressing claim 24. *See, e.g.*, Pet. 56 (addressing claim 24 and stating that "[t]he claim is satisfied for the reasons set forth in [the discussion of claim 7], and feral pigs are wild animals").

Patent Owner contends that "there is no teaching in Silsby that . . . the disclosed system can detect the presence of animals within an enclosure." PO Resp. 37. Additionally, Patent Owner asserts that one of ordinary skill in the art would not have been motivated "to include a motion sensor that senses a presence of animals within an enclosure" because Jeong requires that the approach of the animals be detected to allow sufficient time for the trap operator to activate the trap. *Id.* at 38. Thus, Patent Owner contends that "given [these] requirements of Jeong," one of ordinary skill in the art would not have been motivated to modify the combined references "to detect animals after they enter a trap area."[55] *Id.*

In its Reply, Petitioner contends that it explained previously that one of ordinary skill in the art would have applied the combination of teachings to detect wild animals "when they are located in a position such that they are subjected to capture – *i.e.*, within the enclosure." Pet. Reply 18. Petitioner further asserts that "[t]he detection occurs ***either*** through 'continuous' monitoring of the video feed from the camera assembly, ***or*** upon video fe[e]d as a result of triggering a detector associated with the camera assembly." *Id.* (citing Ex. 1005, 3, 5). Additionally, Petitioner argues that "Silsby explicitly teaches that its motion sensor can detect the presence of animals." *Id.* (citing Ex. 1007 ¶¶ 22, 29).

As we explain above, TB1, TB2, Jeong, and optionally Vorhies, as combined by Petitioner, teaches the subject matter of claim 1. Claims 7 and 24 add a motion sensor to the camera assembly that is configured to sense

[55] As noted above, Patent Owner's Sur-reply addresses Grounds 2–4 together and we have explained why we do not agree with the positions raised therein.

the presence of an animal within the enclosure. Patent Owner does not contest that Silsby teaches a motion sensor as part of a camera assembly or that it would have been obvious to modify the combination of TB1, TB2, Jeong, and optionally Vorhies to include a motion sensor as taught by Silsby. Rather, Patent Owner's argument is that one would not have been motivated to combine the teachings to sense the presence of an animal *within the enclosure* because Patent Owner reads Jeong's teachings as limited to detecting the presence of animals *outside* of the trapping area. As explained above, we disagree with Patent Owner's narrow reading of Jeong. Additionally, as explained above, we also agree with Petitioner that one of ordinary skill in the art would have understood that the placement of Jeong's camera assembly depends on what type of trap is being used and that a critical purpose of Jeong is to actually capture the animal. Thus, for several reasons articulated above, including those reiterated here, we disagree with Patent Owner's argument that one of ordinary skill in the art would not have been motivated to combine the teachings to detect the presence of an animal *within the enclosure*.

Accordingly, on the full record before us, we find that Petitioner has established that the combination of TB1, TB2, Jeong, optionally Vorhies, and Silsby teaches or suggests the subject matter of claims 7 and 24, and that one of ordinary skill in the art would have been motivated to combine the teachings of TB1, TB2, Jeong, optionally Vorhies, and Silsby and would have had a reasonable expectation of success in so doing.

D. Ground 3: Obviousness over TB1, TB2, Jeong, Optionally Vorhies, and Kimura

Petitioner contends that the combination of TB1, TB2, Jeong, optionally Vorhies, and Kimura would have rendered the subject matter of claims 10, 11, 21, 22, and 28 obvious to one of ordinary skill in the art at the time of the invention. Pet. 57–64.

1. Scope and Content of the Prior Art

a. Kimura

Kimura is titled "Extermination System for Harmful Bird, Animal, or Like." Ex. 1008, code (54). Kimura discloses a trapping apparatus for trapping a harmful bird or animal, such as a wild boar, that can be remotely monitored and operated through the use of a charge-coupled device ("CCD") camera and mobile phone. *Id.* at code (57), ¶¶ 5, 9, 13–14.

Figure 1 of Kimura is reproduced below:

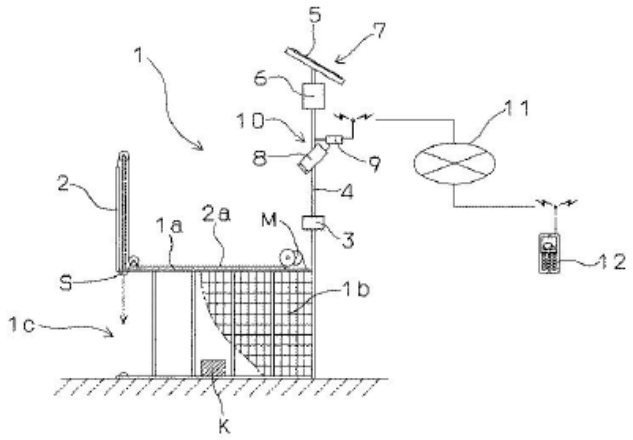

Figure 1 illustrates a schematic configuration of an extermination system for a harmful bird, animal or the like of Kimura's invention. Ex. 1008 ¶ 10. Cage (box trap) 1 has latticed wire mesh 1b affixed to rectangular frame 1a. *Id.* On the front face of cage 1, trap door 2 is provided for blocking entrance 1c. *Id.* When infrared sensor S detects that a wild animal lured by bait or

the like has entered cage 1, trap door 2, which is opened and closed using a one-way clutch mechanism of electric hoist mechanism M, falls so the animal is trapped. *Id.* ¶¶ 10, 11.

Kimura also discloses monitoring device 10 provided with monitoring CCD camera 8 and transceiver device 9, which can remotely send image data shot by CCD camera 8, is installed in a position wherefrom cage 1 and a vicinity thereof can be accurately monitored. Ex. 1008 ¶ 13. Kimura states that monitoring device 10 is configured to actuate in conjunction with sensor S detecting that a wild animal has entered the cage. *Id.* Kimura further discloses that image data shot by CCD camera 8 is sent from transceiver device 9 to "terminal device 12 (in the present example, a mobile terminal such as a mobile phone) in a location far away from the cage 1 via a wireless communication line (the internet) 11," enabling a type of the wild animal trapped in cage 1 to be confirmed from the image data received by terminal device 12. *Id.* ¶ 14.

2. Differences Between the Prior Art and the Claims; Motivation to Modify

Claim 10 depends from claim 1 and further recites "wherein the camera assembly comprises an internet protocol web camera." Ex. 1001, 8:42–43. Claim 11 depends from claim 10 and further recites "wherein the internet protocol web camera transmits the wireless detection signal to the display device via a wireless internet network." *Id.* at 8:44–46. Claims 21 and 22 are similar. Claim 21 depends from claim 16 (which depends from claim 14) and further recites "wherein the camera assembly comprises and internet protocol web camera." *Id.* at 9:39–40. Claim 22 depends from claim 21 and further recites "wherein the internet protocol web camera

transmits the wireless detection signal to the display device via a wireless internet network." *Id.* at 9:41–43. Claim 28 is an independent claim reciting "[a] method for capturing a plurality of feral pigs" and includes substantially the same elements as claims 1 and 14, as well as several limitations of other dependent claims including the same language recited above from claims 10, 11, 21, and 22. *Id.* at 10:5–54.

Regarding claims 10 and 21,[56] Petitioner contends that the combination of TB1, TB2, Jeong, and optionally Vorhies does not expressly disclose the use of an internet protocol camera in its camera assembly, but "Kimura discloses an animal trap that can be remotely monitored and managed through the use of an Internet camera." Pet. 58. In particular, Petitioner relies on Kimura's disclosure of a "CCD camera" in which the "image data shot" by the camera is sent from a transceiver device to a terminal device via the internet. *Id.* (citing Ex. 1008 ¶¶ 13–14; Ex. 1002 ¶ 192). Thus, Petitioner contends that "Kimura teaches the use of an 'Internet protocol web camera' for monitoring a trap." *Id.*

Additionally, Petitioner contends that it would have been obvious to one of ordinary skill in the art "to have utilized an Internet protocol web camera in the camera assembly in order to facilitate the desired goal of remote monitoring and management of trap conditions." Pet. 58–59 (citing Ex. 1002 ¶ 193).

---

[56] Petitioner refers to its arguments and evidence directed to claim 10 in its discussion of claim 21. *See* Pet. 59 ("As described in [addressing claim 10], the TexasBoars Combination in view of Jeong, optionally Vorhies, and Kimura teach this limitation.") (citing Ex. 1002 ¶ 195).

Regarding claims 11 and 22,[57] Petitioner contends that the combination of TB1, TB2, Jeong, and optionally Vorhies teaches "the use of wireless signal transmission from the camera assembly" (as explained in the discussion of limitation 1[f]), and Kimura adds the teaching of using "an 'Internet protocol web camera' for such wireless transmissions from the camera assembly" (as explained in the discussion of claim 10). Pet. 59. Thus, Petitioner asserts that the combination of references teaches the use of an internet protocol web camera and a camera assembly that transmits signals through a wireless network (i.e., the internet). *Id.* (citing Ex. 1002 ¶ 194).

As noted above, independent claim 28 recites limitations substantially the same as claims 1 and 14, as well as additional elements substantially the same as claims 10, 11, 21, and 22. Petitioner provides detailed argument and evidence directed to claim 28, including by referencing Petitioner's argument and evidence directed to similar limitations recited in other Challenged Claims as well as additional argument and evidence directed to limitations not recited previously. *See* Pet. 60–64.

Addressing Ground 3, Patent Owner first contends that Kimura does not remedy the deficiencies Patent Owner argued with respect to independent claims 1 and 14: "Kimura cannot disclose the key limitations recited in Claims 1 and 14 that—as discussed *supra* in Part 6.B—are not disclosed by TB1, TB2, Jeong, or Vorhies." PO Resp. 38. Similarly, Patent Owner asserts that "claim 28 recites every element of independent Claim 1,"

---

[57] Petitioner refers to its arguments and evidence directed to claim 11 in its discussion of claim 22. *See* Pet. 60 ("As described in [addressing claim 11], the TexasBoars Combination in view of Jeong, optionally Vorhies, and Kimura teach this limitation.") (citing Ex. 1002 ¶ 196).

and because Kimura is not relied on for any of those claim elements, "its additional does not cure the deficiencies of TB1, TB2, Jeong and Vorhies." *Id.* at 39.

For the reasons discussed in the context of claims 1 and 14, we disagree with Patent Owner's arguments directed to those claims. Thus, Patent Owner's argument directed to claim 28 does not identify a deficiency with respect to Petitioner's challenge thereto.

Second, Patent Owner argues that "no asserted reference discloses a camera assembly that detects the presence of animals within an enclosure and generates a wireless detection signal before the animals have been trapped." PO Resp. 39. Patent Owner contends that "Kimura discloses a trap that does not transmit any information to a user until *after* an animal has been trapped." *Id.* (citing Ex. 1008 ¶ 6). Thus, according to Patent Owner, "Kimura cannot disclose . . . 'an internet protocol camera' that 'transmits the wireless detection signal to the display device via a wireless network.'" *Id.*

We disagree with Patent Owner's argument. Specifically, Petitioner does not rely on Kimura as teaching detecting animals within an enclosure. Rather, "Kimura is applied to modify the specific type of camera utilized" in the combination of teachings discussed above. *See, e.g.*, Pet. Reply 19. As discussed above, we agree with Petitioner's argument and evidence that the combination of TB1, TB2, Jeong, and Vorhies teaches one of ordinary skill in the art to place one or more cameras such that the area within the field of view includes the area of the trap, which, in a corral trap, would include the area within the enclosure. Thus, because Petitioner does not rely on Kimura for the teachings contested by Patent Owner, Patent Owner's arguments do not detract from Petitioner's showing.

Third, Patent Owner also challenges whether one of ordinary skill in the art would have been motivated to combine Kimura's teachings with the combination of TB1, TB2, Jeong, and optionally Vorhies. PO Resp. 40–41. In particular, Patent Owner asserts that Kimura teaches that its CCD camera "is a battery-operated camera that only transmits still images and is configured to actuate for brief periods of time in order to 'suppress[] unnecessary power consumption of the storage battery.'" *Id.* at 40 (alteration by Patent Owner) (citing Ex. 1008 ¶¶ 12–13). Patent Owner contends that "[t]here is no indication that Kimura's camera assembly, with its limited power capabilities, is suitable for producing or transmitting the video signals required by Jeong." *Id.* Thus, Patent Owner argues that one of ordinary skill in the art "would not have been motivated to replace the camera of Jeong with the camera of Kimura" and would not "have had any expectation that such a substitution would be successful." *Id.* at 40–41.

In its Reply, Petitioner contends that Patent Owner's "piecemeal arguments fail because they do not properly consider the combination of the asserted prior art as a whole, and what the combination fairly suggests" to one of ordinary skill in the art. Pet. Reply 19. Petitioner explains that "[t]he grounds set forth in the Petition do not allege that it would've been obvious to attempt to ***physically*** substitute a battery-operated CCD camera into the arrangement of Jeong." *Id.* Rather, the combination of TB1, TB2, Jeong, and optionally Vorhies teaches and suggests "a camera that is properly configured for the wireless transmission of video signals" and "Kimura teaches that one such form of wireless transmission of camera signals effective for remotely monitoring an animal trap is a wireless Internet connection." *Id.* at 19–20 (citing Ex. 1008 ¶¶ 13–14; Pet. 58). Thus,

Petitioner reiterates that it would have been obvious to one of ordinary skill in the art "to have utilized an 'Internet protocol web camera' in the camera assembly in order to facilitate the objectives of remotely monitoring the trap." *Id.* at 20 (citing Pet. 58–59; Ex. 1002 ¶¶ 191–194).

Petitioner's argument and evidence are persuasive. The combination proposed by Petitioner does not rely on bodily incorporating the CCD camera of Kimura into the combination of TB1, TB2, Jeong, and optionally Vorhies. Rather, as explained above, Petitioner relies upon Kimura as disclosing a particular type of camera—an internet protocol web camera. Patent Owner's arguments are directed to the *particular implementation* of the CCD camera in Kimura as opposed to the teaching that an internet protocol web camera can be successfully incorporated into a trap monitoring system and transmit its signals wirelessly through the internet. We reiterate that

> The test for obviousness is not whether the features of a secondary reference may be bodily incorporated into the structure of the primary reference; nor is it that the claimed invention must be expressly suggested in any one or all of the references. Rather, the test is what the combined teachings of the references would have suggested to those of ordinary skill in the art.

Inst. Dec. 38 (quoting *In re Keller*, 642 F.2d 413, 425 (CCPA 1981); *see also In re Sneed*, 710 F.2d 1544, 1550 (Fed. Cir. 1983) ("[I]t is not necessary that the inventions of the references be physically combinable to render obvious the invention under review.")). Petitioner's arguments and evidence are persuasive to show that one of ordinary skill would have been motivated to modify the combination of TB1, TB2, Jeong, and optionally Vorhies to use an internet protocol web camera to transmit wirelessly through the

internet (as taught by Kimura) and would have had a reasonable expectation of success in so doing.

Accordingly, on the full record before us, we find that Petitioner has established that the combination of TB1, TB2, Jeong, optionally Vorhies, and Kimura teaches or suggests the subject matter of claims 10, 11, 21, 22, and 28, and that one of ordinary skill in the art would have been motivated to combine the teachings of TB1, TB2, Jeong, optionally Vorhies, and Kimura and would have had a reasonable expectation of success in so doing.

E. Ground 4: Obviousness over TB1, TB2, Jeong, Optionally Vorhies, Kimura, and Optionally Silsby

Petitioner contends that the combination of TB1, TB2, Jeong, optionally Vorhies, Kimura, and optionally Silsby would have rendered the subject matter of dependent claims 12 and 23 obvious to one of ordinary skill in the art at the time of the invention. Pet. 64–66. Claim 12 depends from claim 11 and further recites "wherein the display device comprises a computer." Ex. 1001, 8:47–48. Claim 23 depends from claim 22 and similarly further recites "wherein the display device comprises a computer." *Id.* at 9:44–45.

Regarding claims 12 and 23,[58] Petitioner contends that although Jeong's remote control unit "is not specifically called a computer," "it inherently must be capable of receiving and processing the video and image data provided via the transmission/wireless detection signal," and "[i]t must

[58] Petitioner refers to its arguments and evidence directed to claim 12 in its discussion of claim 23. *See* Pet. 66 ("As described in [addressing claim 12], this limitation is met by the TexasBoars Combination in view of Jeong, optionally in view of Vorhies, Kimura, and optionally further in view of Silsby.") (citing Ex. 1002 ¶ 220).

also display the video or image on the disclosed display, and further, accept and process operator input via the disclosed input device, mentioned as a keyboard." Pet. 65 (citing Ex. 1005, 5). Thus, Petitioner asserts that "Jeong['s] remote controller has the hallmarks and capabilities of a computer, and should be considered a 'computer.'" *Id.* (citing Ex. 1002 ¶ 217).

"Alternatively," Petitioner relies upon Silsby as teaching "the use of a laptop computer 136 as a suitable 'base unit.'" Pet. 65 (referring to the Petition's discussion of claim 8, which includes pages 53–54 of the Petition). Petitioner contends that "Silsby teaches the use of [a] laptop computer as being a suitable device for such uses because it has the ability to establish wireless communications with a monitoring system that includes the camera, display images transmitted from the camera, and provide input to the camera." *Id.* at 65–66 (citing Ex. 1007 ¶¶ 9–11, 13, 21, 24; Ex. 1002 ¶ 218). Petitioner argues that it would have been obvious to one of ordinary skill in the art "to have used a laptop computer as a remote control unit in order to provide a device having the features and functionality that render it suitable for carrying out its functions in the remote trap monitoring and management system." *Id.* at 66 (citing Ex. 1002 ¶ 219).

Patent Owner asserts that because claims 12 and 23 each depend from either claim 1 or claim 14, the same arguments raised by Patent Owner above apply to claims 12 and 23 as well. PO Resp. 41. Patent Owner does not raise any additional arguments specifically directed to claims 12 or 23. *See id.*

For the reasons explained above, we do not agree with Patent Owner's arguments directed to claims 1 and 14. Further, in the context of claims 12

and 23, Petitioner has presented uncontested argument and evidence, which we find persuasive for the reasons explained by Petitioner.

On the full record before us and for the reasons explained above, we find Petitioner's arguments and evidence persuasive to show that the combination of TB1, TB2, Jeong, optionally Vorhies, Kimura, and optionally Silsby, teaches or suggests the subject matter of claims 12 and 23, and that one of ordinary skill in the art would have been motivated to combine the teachings of TB1, TB2, Jeong, optionally Vorhies, Kimura, and optionally Silsby and would have had a reasonable expectation of success in so doing.

F. Objective Indicia of Nonobviousness

Patent Owner contends that the objective indicia of nonobviousness "is overwhelming." PO Resp. 41. In particular, Patent Owner asserts that it provides evidence of the following objective indicia, which support its argument that the claims would not have been obvious:

(1) "a long felt unsolved need, and failure of others to solve the problem";

(2) "the passage of time between publication of the prior art and the invention";

(3) "unexpected results";

(4) "professional approval and praise by others";

(5) "commercial success"; and

(6) "attempts by others to copy or secure patents covering the claimed invention."

Id. at 42. As discussed further below, Patent Owner contends that its "M.I.N.E. System" "embodies the claims of the '228 Patent and is coextensive with them." *Id.* at 42–43.

Petitioner challenges Patent Owner's evidence, particularly as failing to establish that the M.I.N.E. System practices the claims and that Patent Owner is entitled to a presumption of nexus. Pet. Reply 20–26.

1. Nexus

For objective indicia of nonobviousness to be accorded substantial weight, their proponent must establish a nexus between the evidence and the merits of the claimed invention. *ClassCo, Inc., v. Apple, Inc.*, 838 F.3d 1214, 1220 (Fed. Cir. 2016). "[T]here is no nexus unless the evidence presented is 'reasonably commensurate with the scope of the claims.'" *Id.* (quoting *Rambus Inc. v. Rea*, 731 F.3d 1248, 1257 (Fed. Cir. 2013)).

A patentee is entitled to a presumption of nexus "when the patentee shows that the asserted objective evidence is tied to a specific product and that product 'embodies the claimed features, and is coextensive with them.'" *Fox Factory, Inc. v. SRAM, LLC*, 944 F.3d 1366, 1373 (Fed. Cir. 2019) (quoting *Polaris Indus., Inc. v. Arctic Cat, Inc.*, 882 F.3d 1056, 1072 (Fed. Cir. 2018) (quoting *Brown & Williamson Tobacco Corp. v. Philip Morris Inc.*, 229 F.3d 1120, 1130 (Fed. Cir. 2000))); *Lectrosonics, Inc. v. Zaxcom, Inc.*, IPR2018-01129, Paper 33 at 32 (PTAB Jan. 24, 2020) (precedential, designated Apr. 14, 2020). On the other hand, the patentee is not entitled to a presumption of nexus if the patented invention is only a component of a commercially successful machine or process. *Fox Factory*, 944 F.3d at 1373 (reaffirming the importance of the "coextensiveness" requirement).

"[T]he purpose of the coextensiveness requirement is to ensure that nexus is only presumed when the product tied to the evidence of secondary considerations 'is the invention disclosed and claimed.'" *Fox Factory*, 944 F.3d at 1374 (quoting *Demaco Corp. v. F. Von Langsdorff Licensing Ltd.*, 851 F.2d 1387, 1392 (Fed. Cir. 1988)). "[T]he degree of correspondence between a product and a patent claim falls along a spectrum. At one end of the spectrum lies perfect or near perfect correspondence. At the other end lies no or very little correspondence." *Id.* "A patent claim is not coextensive with a product that includes a 'critical' unclaimed feature that is claimed by a different patent and that materially impacts the product's functionality." *Id.* at 1375.

Nonetheless, "[a] finding that a presumption of nexus is inappropriate does not end the inquiry into secondary considerations." *Fox Factory*, 944 F.3d at 1375. "To the contrary, the patent owner is still afforded an opportunity to prove nexus by showing that the evidence of secondary considerations is the 'direct result of the unique characteristics of the claimed invention.'" *Id.* at 1373–74 (quoting *In re Huang*, 100 F.3d 135, 140 (Fed. Cir. 1996)). "Where the offered secondary consideration actually results from something other than what is both claimed and *novel* in the claim, there is no nexus to the merits of the claimed invention," meaning that "there must be a nexus to some aspect of the claim not already in the prior art." *In re Kao*, 639 F.3d 1057, 1068–69 (Fed. Cir. 2011) (emphasis in original). On the other hand, there is no requirement that "objective evidence must be tied exclusively to claim elements that are not disclosed in a particular prior art reference in order for that evidence to carry substantial weight." *WBIP, LLC v. Kohler Co.*, 829 F.3d 1317, 1331 (Fed. Cir. 2016).

A patent owner may show, for example, "that it is the claimed combination as a whole that serves as a nexus for the objective evidence; proof of nexus is not limited to only when objective evidence is tied to the supposedly 'new' feature(s)." *Id.* at 1330.

Ultimately, the fact finder must weigh the secondary considerations evidence presented in the context of whether the claimed invention as a whole would have been obvious to a skilled artisan. *WBIP*, 829 F.3d at 1331–32. Once a patentee has presented a prima facie case of nexus, the burden of coming forward with evidence in rebuttal shifts to the challenger "to adduce evidence to show that the commercial success was due to extraneous factors other than the patented invention." *Demaco*, 851 F.2d at 1393.

Patent Owner "bears the burden of showing that a nexus exists." *WMS Gaming Inc. v. Int'l Game Tech.*, 184 F.3d 1339, 1359 (Fed. Cir. 1999). "To determine whether the patentee has met that burden, we consider the correspondence between the objective evidence and the claim scope." *Henny Penny Corp. v. Frymaster LLC*, 938 F.3d 1324, 1332 (Fed. Cir. 2019) (quoting *Demaco*, 851 F.2d at 1392).

a. Presumption of Nexus

i. The Parties' Arguments

Patent Owner contends that "[h]ere a nexus between the commercial embodiment of the claims (Jager Pro's M.I.N.E. System) is presumed because the M.I.N.E. System embodies the claims of the '228 Patent and is coextensive with them." PO Resp. 42–43. Patent Owner asserts that "[a] publicly available video that [Patent Owner] uploaded to its YouTube page on January 30, 2013 describes the M.I.N.E. System in use in December of

2012, shortly after its release." *Id.* at 43. Patent Owner contends that "[t]he features of the system shown in this video have, in relevant part, remained substantially the same since this video was taken." *Id.* Patent Owner provides a chart that purports to map the limitations of claim 1 of the '228 patent to the M.I.N.E. System using "screenshots" from the video. *See id.* at 43–48. Following the chart, Patent Owner contends that "the M.I.N.E. System is used to practice a trapping method that is essentially the same as the method recited by the challenged claims of the '228 Patent." *Id.* at 48. In particular, Patent Owner contends that the M.I.N.E. System "embodies the claims of the '228 patent and is coextensive with them. There are no unclaimed features of the trap that change or modify its functionality. This establishes a nexus between the M.I.N.E. System and the '228 Patent's claims." *Id.*

Petitioner responds with several arguments in its Reply. To begin, Petitioner challenges, to some extent, Patent Owner's and Dr. Nesbit's reliance on the video and screen shots. Pet. Reply 21. In particular, Petitioner contends that (1) Patent Owner did not produce or authenticate the video, (2) Dr. Nesbit did not personally examine an actual M.I.N.E. System to attempt to independently ascertain the features and functionality of the trap or confirm the accuracy and completeness of the video, and (3) the screenshots, which are purportedly from the video, also were not produced or authenticated by Patent Owner. *Id.*

In its Sur-reply, Patent Owner contends that the video and screenshots "***were*** introduced as an Exhibit, because they were linked and reproduced in Dr. Nesbit's declaration." PO Sur-reply 22 (citing Ex. 2002 ¶¶ 94–95). And, Patent Owner contends that "Petitioner never challenged Dr. Nesbit's

reliance on the video or video screenshots in its Evidentiary Objections, and thus should not be heard to complain about them now." *Id.* (citing Paper 20 (Petitioner's Evidentiary Objections)).

Despite the accuracy of Petitioner's argument, we agree with Patent Owner that Petitioner did not object to, or seek to exclude or strike, Patent Owner's reliance upon the video and screenshots. Nor did Petitioner move to exclude or strike Dr. Nesbit's testimony on which Patent Owner relies. Accordingly, we consider the information provided.

Additionally, Petitioner raises several arguments challenging whether Patent Owner has shown that the M.I.N.E. System includes each limitation of claim 1. First, Petitioner contends that Patent Owner's arguments are inadequate and conclusory and that "the screenshots . . . do not demonstrate that the claimed functionality of the method of claim 1 is actually being performed by any of the components allegedly illustrated therein." Pet. Reply 21. For example, Petitioner points to Patent Owner's identification of the claimed release mechanism, but asserts that "there is no way to confirm that the circled portion is actually functioning as a release mechanism based on the picture, or even from the video." *Id.* at 22 (citing PO Resp. 46). Petitioner also points to Patent Owner's identification of a control mechanism coupled to the release mechanism and contends that "there is no way to verify from the picture of the circled object . . . that it is a control mechanism that generates a release signal that is sent to the release mechanism and is in communication with a display device, as required by claim 1." *Id.* at 23.

Petitioner also argues that Patent Owner's claim chart, and Dr. Nesbit's testimony in support thereof, does not match the language of

claim 1, particularly limitation 1[e]. Pet. Reply 23–24. Petitioner contends that limitation 1[e] recites that the release mechanism effects movement of a portion of the enclosure (gate) from the open position to the closed position upon receipt of a release signal from *a control mechanism*, but that the video and claim chart state that the M.I.N.E. System "was controlled by a cell phone that transmits a wireless signal ***to the release mechanism***, and that the customer sent the wireless control signal '***to the trap***,' 'which generated a release signal and released the gate.'" *Id.* at 23. Petitioner asserts that the sequence identified does not match the claim requirement that the display device send a wireless control signal to the control mechanism. *Id.* at 24. Therefore, Petitioner contends that Patent Owner "does not even allege sufficient information to establish that the M.I.N.E. trapping system reads on parts of 1[e]-[g] of claim 1." *Id.*

Additionally, Petitioner points to the language of limitation 1[f], which Petitioner asserts requires a camera assembly to transmit a wireless detection signal to the display device, but Patent Owner "fails to identify the ***camera system*** that sends the wireless detection signal, and fails to demonstrate that the ***camera system itself detects*** the presence of animals in the trap." Pet. Reply 24.

Petitioner also argues that Patent Owner "fails to demonstrate that it is entitled to a presumption of a nexus because the M.I.N.E. trapping system is not ***coextensive*** with claim 1." Pet. Reply 24. In particular, Petitioner argues that in "a pending child" application (U.S. Patent Application No. 16/122,384 ("the '384 application")), related to the '228 patent, Patent Owner argued that two features added to the claims of the '384 application were critical: (1) that the camera assembly comprises *a motion sensor* and

(2) that the camera assembly transmits an image of at least one portion of the enclosure area to the display device while the enclosure is in the open position. *Id.* at 25 (citing Ex. 1021, 57–61, 63–64). Petitioner asserts that Dr. Nesbit acknowledges that "such a detection driven camera alters the functionality of the system by, for example, reducing power consumption." *Id.* (citing Ex. 1023, 89:10–91:5). Because claim 1 of the '228 patent "does not recite a 'motion sensor,' and also does not require the transmission of an image of at least one portion of the enclosure area to the display device 'while the enclosure is in the open position,'" "claim 1 is ***not coextensive*** with the M.I.N.E. trapping system as alleged by [Patent Owner], and thus the alleged presumption of a nexus has not been established." *Id.* at 26.

In its Sur-reply, Patent Owner contends that Petitioner "does not challenge the secondary considerations evidence, and argues only that there is no nexus." PO Sur-reply 21. Patent Owner also raises several additional arguments in its Sur-reply.

First, Patent Owner contends that the "control mechanism" is identified in the screenshots and the M.I.N.E. System's manual. *Id.* at 22 (citing PO Resp. 45–46; Ex. 2002 ¶¶ 46–47; Ex. 2008 (M.I.N.E. Trapping System Operations Manual, Version 4)). Patent Owner asserts that "[t]he manual identifies these components as the 'control box' and 'trigger assembly' located on the M.I.N.E. System's gate, where they hold the gate open to allow animals to enter the enclosure, and release the gate to trap animals in response to a wireless signal from the user's device." *Id.* (citing Ex. 2008, 4, 7–10, 18–19).

Second, regarding a "wireless control signal," Patent Owner contends that Dr. Nesbit explains that the M.I.N.E. System "uses a 'cell phone display

device' to send 'a wireless control signal to the trap (in this case, a phone call), which generated a release signal and released the gate.'" *Id.* at 22–23 (citing PO Resp. 46–47; Ex. 2002 ¶¶ 47–48). Patent Owner also asserts that "the manual shows the 'wireless control signal' is processed via the 'control box,' which includes an antenna . . . that receives the 'wireless control signal' from the user's device, and generates a 'release signal' that triggers the gate's latch, allowing it to close." *Id.* at 23 (citing Ex. 2008, 8–11, 18).

Third, regarding the camera assembly, Patent Owner asserts that Petitioner acknowledges that the M.I.N.E. System includes a camera assembly and motion sensor. PO Sur-reply 23 (citing Pet. Reply 25). And, Patent Owner contends that the camera assembly functions to send a wireless detection signal to the display device when animals are detected in the enclosure. *Id.* (citing PO Resp. 46–47; Ex. 2002 ¶¶ 47–48).

Patent Owner also responds to Petitioner's contention that Patent Owner failed to show that the M.I.N.E. System is coextensive with claim 1 of the '228 patent. PO Sur-reply 24–25. In particular, Patent Owner contends that both features identified by Petitioner—a camera assembly that includes a motion sensor and that transmits an image while the enclosure is in an open position—are coextensive with the independent claims. *Id.* at 24. Patent Owner asserts that dependent claims 7 and 24 recite that the camera assembly comprises a motion sensor and dependent claims 3 and 17 recite the transmission of an image while the enclosure is in an open position. *Id.* Thus, Patent Owner argues that the motion sensor is a species of the claimed camera assembly and the transmission of an image while the enclosure is open is a species of the wireless detection signal. *Id.* Patent Owner contends that even if these features are "critical features," they are "clearly

coextensive with the dependent claims." *Id.* Nonetheless, Patent Owner also contests Petitioner's characterization that these features are "critical" simply because Patent Owner included them in claims of a related patent application, which "have ***nothing*** to do with the functionality of the M.I.N.E. System in the relevant time frame." *Id.* at 24–25.

ii. Discussion

For the reasons explained below, we find that Patent Owner has not established that it is entitled to a presumption of nexus. First, Patent Owner argues about the "claims" of the '228 patent generally, although its claim chart and the claim chart included in Dr. Nesbit's Declaration only purport to map claim 1 of the '228 patent to the M.I.N.E. System. In its Sur-reply, Patent Owner raises a *new* argument asserting that dependent claims 3, 7, 17, and 24 are coextensive with the M.I.N.E. System. This argument was not raised in Patent Owner's Response because the Response included argument and evidence directed to claim 1 only. *See* Tr. 44:23–45:14 (Petitioner's counsel contending that this argument by Patent Owner is improper because it was raised for the first time in the Sur-reply). Patent Owner may not raise this new argument in its Sur-reply as it proceeds in a new direction with a new approach by attempting to rely on dependent claims to establish coextensiveness where Patent Owner only relied upon claim 1 in its Patent Owner Response. *See* 37 C.F.R. § 42.23(b) ("A sur-reply may only respond to arguments raised in the corresponding reply and may not be accompanied by new evidence other than deposition transcripts of the cross-examination of any reply witness."); Consolidated Trial Practice Guide at 74 (Nov. 2019) (*available at* https://www.uspto.gov/TrialPracticeGuideConsolidated) ("'*Respond,' in the context of 37 C.F.R. § 42.23(b), does not mean proceed*

in a new direction with a new approach as compared to the positions taken in a prior filing." (emphasis added)). Accordingly, the only claim for which we consider the question of nexus is claim 1.[59]

Second, turning to Dr. Nesbit's testimony, Dr. Nesbit testifies that the M.I.N.E. System is coextensive with the "claims" of the '228 patent, but also only provides a claim chart purporting to compare claim 1 of '228 patent to the M.I.N.E. System. Ex. 2002 ¶¶ 94–95. Dr. Nesbit fails to provide any testimony regarding any other claims of the '228 patent. *See id.* Accordingly, as discussed above regarding Patent Owner's Response, there is no evidence to support whether any other claims, aside from claim 1, of the '228 patent read on the M.I.N.E. System or are coextensive therewith.

Third, and most significant, Patent Owner fails to show that the M.I.N.E. System practices each limitation of claim 1.[60] In particular, as reflected above, limitation 1[e] requires that the release mechanism close the enclosure "upon receipt of a release signal from a control mechanism." Patent Owner, however, does not assert that the M.I.N.E. System includes a release mechanism that effects closure *upon receipt of a release signal from a control mechanism*. In addressing 1[pre] and limitations 1[a]–[d], Patent Owner first states, in relevant part, that "[t]he image below from the M.I.N.E. System manual (Ex. ___)[61] shows a closer image of the control

---

[59] Even if we were to consider dependent claims 3, 7, 17, and 24, the outcome here would not change because the same failure—that Patent Owner has not established that the M.I.N.E. System practices claim 1—applies to these claims as well.
[60] Dr. Nesbit's testimony includes the same claim chart and thus are discussion applies equally to his testimony. *See* Ex. 2002 ¶ 94.
[61] This citation is left blank in Patent Owner's Response and Dr. Nesbit's Declaration.

mechanism, which includes an electronic relay and battery box (circled) that is coupled to a release mechanism (boxed)." PO Resp. 45. Regarding limitations 1[e]–[g], which Patent Owner addresses together, Patent Owner states:

> The video explains that the M.I.N.E. System was controlled by a cell phone display device (below) *that transmits a wireless signal to the release mechanism* (shown below)[.]
>
> . . .
>
> The video further explains that the M.I.N.E. System sent a signal to the display device (the customer's mobile phone), notifying him that animals were in the trap enclosure:
>
> . . .
>
> The customer was then able to look at a picture of the feral pigs in the trap, at which time he *sent a wireless control signal to the trap* (in this case, a phone call), *which generated a release signal and released the gate* (circled).

Id. at 46–47 (emphasis added).

As reflected above, Patent Owner fails to identify a release mechanism that effects movement to close the enclosure *upon receipt of the release signal from the control mechanism*, as required by limitation 1[e]. Specifically, Patent Owner fails to identify a release mechanism receiving a release signal *from the control mechanism*. Instead, Patent Owner states that "a cell phone display device . . . *transmits a wireless signal to the release mechanism*." *Id.* (emphasis added). And, that a customer sent a wireless control signal *to the trap*, which generated a release signal and released the gate. That is not what claim 1 requires. *See* Pet. Reply 23–24 (arguing the same). Claim 1 recites a specific method that includes transmitting signals between different components. Patent Owner's analysis omits the requirement recited in limitation 1[e] pertaining to the control mechanism as

discussed above. Patent Owner's omission is particularly significant in the circumstances here, where it is uncontested that Dr. Nesbit did not examine an actual M.I.N.E. System to determine whether the components transmit signals in the manner required by the claim.

In its Sur-reply, aside from identifying the arguments discussed above that do not track the language of limitation 1[e], Patent Owner also points to the manual contending that it "shows the 'wireless control signal' is processed via the 'control box,' which includes an antenna (Ex2008, 11, 18) that receives the 'wireless control signal' from the user's device, and generates a 'release signal' that triggers the gate's latch, allowing it to close." PO Sur-reply 23 (citing Ex. 2008, 8–10).

We do not agree. In the Patent Owner Response, Patent Owner only relies upon the manual as showing "the control mechanism, which includes an electronic relay and battery box . . . that is coupled to a release mechanism." PO Resp. 45 (citing "Ex. __").[62] Even considering the manual, the manual does not teach that which Patent Owner asserts. Specifically, the manual, at pages 8–18[63] cited by Patent Owner, discusses how to assemble the M.I.N.E. System. *See* Ex. 2008, 8–18. The cited portions of the manual do not discuss receipt of a "wireless control signal" or generation of a "release signal" as Patent Owner contends. We agree with Patent Owner that the manual indicates that the control box antenna can receive a wireless signal from 250 meters away (*see* Ex. 2008, 12 (manual page 11)), but this statement does not provide the evidence missing from

[62] The M.I.N.E. System manual is Exhibit 2008.
[63] We note that Patent Owner's citations to the product manual are to the underlying pages of the manual and not the pages of the exhibit itself.

Patent Owner's analysis to establish that the M.I.N.E. System practices limitation 1[e].

Thus, for the reasons discussed above, we find that Patent Owner has not shown that the M.I.N.E. System reads on claim 1 of the '228 patent and, for the same reasons, has not shown that the M.I.N.E. System is coextensive with claim 1 of the '228 patent.

b. Nexus Absent the Presumption

Patent Owner does not allege that it establishes nexus absent a presumption based on coextensiveness. *See generally* PO Resp. 41–65. During the oral hearing, counsel for Patent Owner confirmed that it did not assert nexus absent the presumption. Tr. 84:23–85:6. ("I don't believe that we have argued nexus outside of the presumption that should be entitled in view of the commercial embodiment in the M.I.N.E. trapping system."). In light of Patent Owner's confirmation and because nexus was not argued in the Patent Owner Response outside of the discussion regarding coextensiveness, we find that Patent Owner has conceded and waived any argument that it has satisfied its burden to establish a nexus between the evidence offered to show objective indicia of nonobviousness and the claims of the '228 patent absent a presumption of nexus based on coextensiveness. *See* Paper 14 (Scheduling Order), 8 ("Patent Owner is cautioned that any arguments not raised in the response may be deemed waived."); *see also In re NuVasive, Inc.*, 842 F.3d at 1381 (determining that an argument not raised in a patent owner response was waived).

Additionally, because Patent Owner fails to establish that the M.I.N.E. System practices each limitation of claim 1 of the '228 patent (or any other claim of the '228 patent), its arguments directed to objective indicia

pertaining to the M.I.N.E. System[64] do not support the nonobviousness of the claims themselves. In particular, even if the M.I.N.E. System received substantial praise, commercial success, etc., that evidence is inapplicable to the claims at issue because the M.I.N.E. System has not been shown to practice the claims.

2. Patent Owner's Objective Indicia Evidence

As noted above, Patent Owner argues that several objective indicia support its contentions that the claims would not have been obvious. *See* PO Resp. 48–65. Petitioner does not raise any arguments directed to Patent Owner's evidence aside from the arguments noted above—contesting that Patent Owner established that the M.I.N.E. System practices any of the claims of the '228 patent and that the M.I.N.E. System is coextensive with any of the claims. *See generally* Pet. Reply; *see also* PO Sur-reply 21 ("Petitioner does not challenge the secondary considerations evidence, and argues only that there is no nexus between the '228 Patent and the M.I.N.E. System.").

We have reviewed all of Patent Owner's evidence. For objective indicia of nonobviousness to be accorded substantial weight, however, Patent Owner must establish a nexus between the evidence and the merits of the claimed invention. *ClassCo*, 838 F.3d at 1220. Thus, because Patent

[64] Patent Owner's discussion of its objective indicia refers to the M.I.N.E. System generally and not any specific novel aspects or limitations of the claims of the '228 patent. *See* PO Resp. 48–65. Thus, even to the extent Patent Owner's arguments and evidence could be interpreted as arguing that "the claimed combination as a whole . . . serves as a nexus" (*see WBIP*, 829 F.3d at 1331), this argument is insufficient because Patent Owner has not shown that the M.I.N.E. System practices each limitation of claim 1 or any other claim of the '228 patent.

Owner has not established a nexus (whether via the presumption or otherwise), Patent Owner's evidence of objective indicia is not entitled to substantial weight. Nonetheless, we consider Patent Owner's evidence of objective indicia in our weighing of the *Graham* factors, below.

G. Weighing the Graham Factors

"Once all relevant facts are found, the ultimate legal determination [of obviousness] involves the weighing of the fact findings to conclude whether the claimed combination would have been obvious to an ordinary artisan." *Arctic Cat*, 876 F.3d at 1361. On balance, considering the complete record before us, Petitioner has established, by a preponderance of the evidence, that claims 1–28 of the '228 patent would have been obvious.

Regarding claim 1—the only claim that Patent Owner and Dr. Nesbit attempt to map to the M.I.N.E. System—Petitioner has established that the combination of TB1, TB2, and Jeong (as well as the alternative that relies additionally on Vorhies) teaches or suggests the subject matter of the claim. The proposed combinations are not based on hindsight reconstruction; rather, they are straightforward and logical. In particular, Jeong teaches a remote monitoring system for a trap and TB1/TB2 teaches a specific type of trap. And, although we find that Jeong teaches or suggests wireless signal transmission, Vorhies is relied on in the alternative for that teaching. Additionally, Petitioner has established, with strong supporting evidence (including Dr. Ditchkoff's testimony and the teachings of the references themselves), that one of ordinary skill in the art would have been motivated to apply Jeong's monitoring system (as modified in the alternative with Vorhies's wireless signal transmission) to the corral trap taught by TB1 and TB2, and would have had a reasonable expectation of success in doing so.

Thus, we give Petitioner's evidence of obviousness substantial weight. Additionally, we disagree with many of Patent Owner's arguments in response and we do not give Patent Owner's evidence of objective indicia of nonobviousness substantial weight for the reasons discussed above, even after considering the specific evidence set forth by Patent Owner and giving it as much weight as possible under the circumstances described above.

We also find that the balance weighs in Petitioner's favor regarding claims 2–28 because Patent Owner has not established that the M.I.N.E. System practices any of these claims or that there is a nexus between the objective indicia of nonobviousness and any of these claims.

Accordingly, on balance, considering the complete record before us, Petitioner has established, by a preponderance of the evidence, that claims 1–28 of the '228 patent would have been obvious to one of ordinary skill in the art at the time of the invention.

IV. SUMMARY[65]

For the reasons discussed above, Petitioner has demonstrated, by a preponderance of the evidence, that claims 1–28 of the '228 patent are unpatentable. Our conclusions regarding the Challenged Claims are summarized below:

---

[65] Should Patent Owner wish to pursue amendment of the challenged claims in a reissue or reexamination proceeding subsequent to the issuance of this decision, we draw Patent Owner's attention to the April 2019 *Notice Regarding Options for Amendments by Patent Owner Through Reissue or Reexamination During a Pending AIA Trial Proceeding*. *See* 84 Fed. Reg. 16654 (Apr. 22, 2019). If Patent Owner chooses to file a reissue application or a request for reexamination of the challenged patent, we remind Patent Owner of its continuing obligation to notify the Board of any such related matters in updated mandatory notices. *See* 37 C.F.R. § 42.8(a)(3), (b)(2).

Claims Challenged	35 U.S.C. §	Reference(s)/Basis	Claims Shown Unpatentable	Claims Not Shown Unpatentable
1–3, 13–17, 26, 27	103(a)	TB1, TB2, Jeong, optionally Vorhies	1–3, 13–17, 26, 27	
4–9, 18–20, 24, 25	103(a)	TB1, TB2, Jeong, optionally Vorhies, Silsby	4–9, 18–20, 24, 25	
10, 11, 21, 22, 28	103(a)	TB1, TB2, Jeong, optionally Vorhies, Kimura	10, 11, 21, 22, 28	
12, 23	103(a)	TB1, TB2, Jeong, optionally Vorhies, Kimura, optionally Silsby	12, 23	
Overall Outcome			1–28	

V. ORDER

In consideration of the foregoing, it is hereby:

ORDERED that claims 1–28 of U.S. Patent No. 9,814,228 B2 are determined to be unpatentable;

FURTHER ORDERED that Petitioner's Objections to Patent Owner's Demonstrative Exhibits (Paper 34) are dismissed as moot; and

FURTHER ORDERED that, because this is a Final Written Decision, parties to this proceeding seeking judicial review of this Decision must comply with the notice and service requirements of 37 C.F.R. § 90.2.

FOR PETITIONER:

Scott Cummings
Katherine McMorrow
DENTONS US LLP
scott.cummings@dentons.com
kate.mcmorrow@dentons.com

FOR PATENT OWNER:

Richard W. Miller
Joseph P. Anderson III
BALLARD SPAHR LLP
millerrw@ballardspahr.com
andersonjp@ballardspahr.com