Trials@uspto.gov
571-272-7822

Paper 81
Date: October 21, 2024

PUBLIC VERSION

UNITED STATES PATENT AND TRADEMARK OFFICE

BEFORE THE PATENT TRIAL AND APPEAL BOARD

WEBER, INC.,
Petitioner,

v.

PROVISUR TECHNOLOGIES, INC.,
Patent Owner.

IPR2020-01556
Patent 10,625,436 B2

Before MITCHELL G. WEATHERLY, FRANCES L. IPPOLITO, and JON M. JURGOVAN, *Administrative Patent Judges.*

JURGOVAN, *Administrative Patent Judge.*

JUDGMENT
Final Written Decision on Remand
Determining All Challenged Claims Unpatentable
35 U.S.C. § 318(a)

I. INTRODUCTION

A. Background

Weber, Inc. ("Petitioner") filed a Petition (Paper 2, "Pet.") requesting *inter partes* review of claims 1–16 ("the challenged claims") of U.S. Patent No. 10,625,436 B2 (Ex. 1001, "the '436 Patent"). Provisur Technologies, Inc. ("Patent Owner") filed a Preliminary Response. Paper 8 ("Prelim. Resp."). Applying the standard set forth in 35 U.S.C. § 314(a), we instituted review of claims 1–16 of the '436 Patent.

During trial, Patent Owner filed a Response (Paper 23, "Resp."), Petitioner filed a Reply (Paper 30), and Patent Owner filed a Sur-Reply (Paper 48).[1] An Oral Hearing took place on December 16, 2021, and the Hearing Transcript is included in the record. Paper 64 ("Tr.").

We entered a Final Written Decision ("prior FWD") under 35 U.S.C. § 318(a) on March 31, 2022. Paper 67.

Petitioner appealed the prior FWD to the Court of Appeals for the Federal Circuit ("Federal Circuit") on March 18, 2022. Paper 68. On February 24, 2024, the Federal Circuit reversed-in-part, vacated-in-part, and remanded the prior FWD. *Weber, Inc. v. Provisur Tech., Inc.*, 92 F.4th 1059 (Fed. Cir. 2024).

Specifically, the Federal Circuit "reverse[d] the Board's finding that Weber's operating manuals do not qualify as printed publications." *Weber*, 92 F.4th at 1069. The Federal Circuit further held that the prior art disclosed the "disposed over" limitation of claim 1 as properly construed, as well as

[1] Patent Owner also submitted redacted versions of its Preliminary Response, Response, and Sur-Reply. Papers 8, 24, 49. The redactions relate to information subject to our Protective Orders. Papers 12, 58.

the "stop gate" limitation of claim 1. *Weber*, 92 F.4th at 1069–1072. In addition, the Federal Circuit indicated it had considered Petitioner's remaining arguments and found them unpersuasive. *Weber*, 92 F.4th at 1072. Accordingly, the Federal Circuit vacated our determinations that Petitioner failed to establish unpatentability of claims 1–16 of the '436 patent, and remanded the case to the Board for further proceedings consistent with its opinion. *Weber*, 92 F.4th at 1072.

Following a conference call, with our authorization, Patent Owner and Petitioner filed briefs for the purpose of identifying portions of the record relating to matters that remain to be decided following the Federal Circuit's remand. Paper 74 (Patent Owner's Brief on Remand), Paper 75 (Petitioner's Brief on Remand).

Patent Owner filed a Petition for Writ of Certiorari (Ex. 2032) with the U.S. Supreme Court, which was docketed on June 27, 2024. Patent Owner requested authorization to file a motion for a stay pending the outcome of the Petition for Writ of Certiorari, which we denied. Paper 78.

For the reasons set forth below, after considering the arguments and evidence in light of the Federal Circuit's decision, we determine on remand that Petitioner has established by a preponderance of the evidence that each of challenged claims 1–16 of the '436 patent would have been obvious over the prior art asserted in Petitioner's challenge grounds.

B. Real Parties in Interest

Petitioner identifies the following entities as real parties in interest: Textor, Inc.; Weber Maschinenbau GmbH Breidenbach; Weber Maschinenbau GmbH Neubrandenburg; and Textor Maschinenbau GmbH. Pet. 80. Patent Owner identifies Provisur Technologies, Inc. as the sole real party in interest. Paper 5, 1.

C. Related Matters

The parties list as related matters *Provisur Technologies, Inc. v. Weber, Inc. et al*, Case No. 5-20-cv-06069 (MOWD); and IPR2020-01557, which challenges U.S. Patent No. 10,639,812 B2, and which, like the ’436 Patent, is a division of U.S. Application No. 13/099,325 filed May 2, 2011. Pet. 80; Paper 5, 1.

D. Summary of the ’436 Patent

The ’436 patent describes a high-speed slicing machine for slicing food articles. Ex. 1001, codes (54), (57). The ’436 patent explains in its background section that high speed slicing machines for food articles can be configured as an automatically loaded, continuous feed machine, or a back-clamp or gripper type slicing machine. Ex. 1001, 1:36–45. The ’436 patent explains that “it would be desirable to slice plural food articles with independent feeding and weighing capabilities, with hygienic and operational enhancements.” *Id.* at 2:37–40.

Figure 1B is reproduced below:

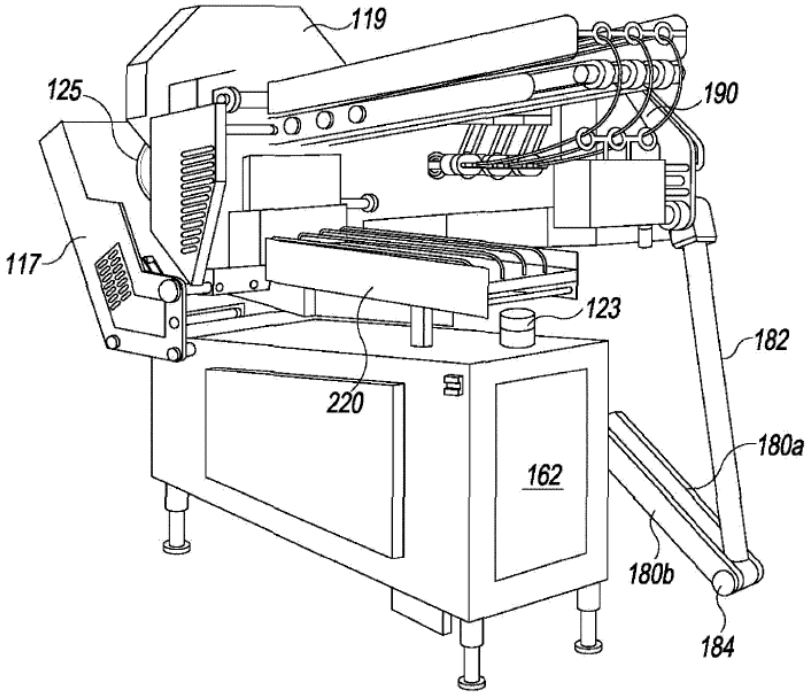

Fig. 1B

The slicing machine illustrated in Figure 1B includes food article feed mechanism frame 190, slicing blade 125, and guard 119. *Id.* at 5:14–31. "[T]he elevation of the food article feed apparatus [120, not labeled in Figure 1B] can be adjusted by using the servomotor to selectively pivot the levers 180a, 180b and lower the rear of the frame 190." *Id.* at 5:29–32. An automatic food article loading apparatus includes lift tray assembly 220, which receives the food articles to be sliced. *See id.* at 9:15–22. "[T]ray positioning apparatus [not labeled in Figure 1B] pivots the tray assembly 220 to be parallel with, and below the food article feed apparatus 120 in a staging position." *Id.*

Figure 8 is reproduced below:

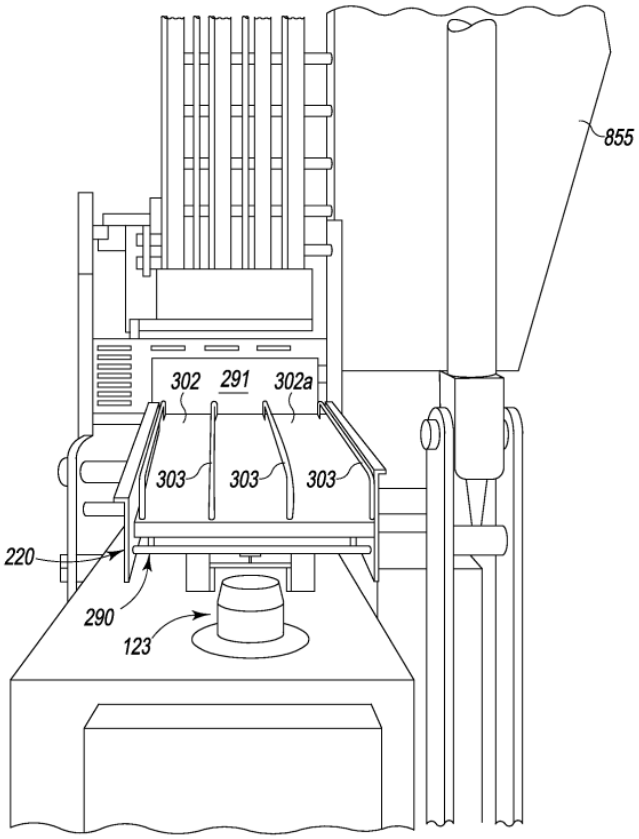

Fig. 8

As shown in Figure 8, lift tray assembly 220 includes frame 290 that supports a movable food article support tray 302. *Id.* at 9:23–32. Frame 290 includes end plate 291. *Id.* Food articles are loaded onto tray 302 until they abut end plate 291. *Id.* Tray 302 includes four spaced-apart guard rails 303 that define three lanes corresponding to three feed paths for the slicing machine. *Id.* Three servomotors are located within upper compartment 855 that is supported by frame 190. *Id.* at 6:7–10.

Figure 7A is reproduced below:

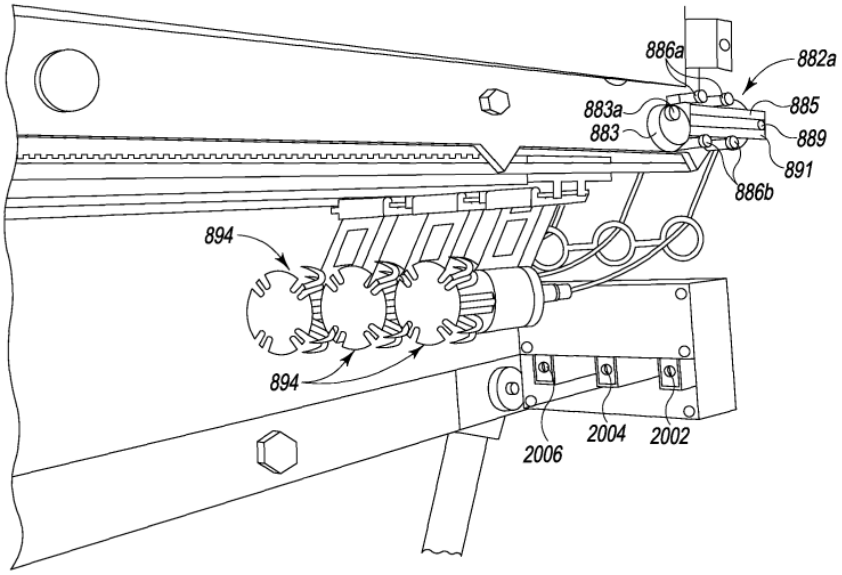

Fig. 7A

As shown in Figure 7A, adjustable cam belt tension adjustment mechanism 882a includes fork 885 braced by adjustable cam 883, and the fork is guided by upper and lower pins 886a, 886b to slide rearward and forward. *Id.* at 6:13–22. Gripper 894 is translated along the food article feed path by a belt. *Id.* at 6:23–29. Sensors 2002, 2004, 2006 sense the ends of each food article in the three lanes on the tray 302, and communicate that information to the machine control. *Id.* at 10:16–29. "By knowing the exact end of the food article, the grippers know when to be activated to seize the food article." *Id.*

E. Illustrative Claims

Petitioner challenges claims 1–16, which are all of the claims in the '436 patent. Claims 1 and 9 are the only independent claims. Claims 2–8 depend from claim 1, and claims 10–16 depend from claim 9.

Claims 1 and 9 are reproduced below, with brackets noting Petitioner's identifiers:

> 1. [1.p] A food article slicing machine, comprising:
>
> [1.1] a food article loading apparatus with a lift tray assembly for moving food articles from a staging position to an elevated position at a beginning of a food article feed path;
>
> [1.2] a food article feed apparatus disposed over the food article loading apparatus having an upper conveyor assembly with a driven endless conveyor belt used in cooperation with a food article gripper for moving the food articles along the food article feed path;
>
> [1.3] a slicing station at an end of the food article feed path with a knife for slicing the food articles; and
>
> [1.4] a food article stop gate disposed upstream of the slicing station that forms a portion of the food article feed path,
>
> [1.5] wherein the food articles are supported in position along the food article feed path by at least the food article stop gate when the lift tray assembly is moved when in its elevated position, and
>
> [1.6] wherein the food article stop gate also opens to drop food article end portions.

Ex. 1001, 10:56–11:8 (bracketed labels added for ease of discussion).

> 9. [9.p] A food article slicing machine, comprising:
>
> [9.1] a slicing station comprising a knife blade and a knife blade drive driving the blade along a cutting path in a cutting plane;
>
> [9.2] a food article loading apparatus including a lift tray assembly moveable between a staging position and an elevated position, the elevated position being a position where food articles disposed within the lift tray assembly are in a food article feed path;
>
> [9.3] a food article feed apparatus disposed over said food article loading apparatus and having a conveyor assembly with independently driven endless conveyor belts,
>
> [9.4] wherein each of the conveyor belts is used in cooperation with an independently driven and controlled food

> article gripper for moving a food article along the food article feed path, and
>
> [9.5] wherein the conveyor assembly is an upper conveyor assembly; and
>
> [9.6] a food article stop gate disposed upstream of the slicing station that forms a portion of the food article feed path,
>
> [9.7] wherein the food articles are supported in position along the food article feed path by at least the food article stop gate when the lift tray assembly is moved when in its elevated position, the food articles passing over the food article stop gate when the food articles move along the food article feed path, and
>
> [9.8] wherein the food article stop gate also serves as a door for the removal of food article end portions.

Ex. 1001, 11:30–12:16 (bracketed labels added for ease of discussion).

F. Asserted Grounds

Petitioner contends that the challenged claims are unpatentable based on the following grounds:

Claims Challenged	35 U.S.C. §[2]	References/Basis
1–16	103	2006 904 Operating Manual[3], Lindee[4]
1–16	103	2010 904 Operating Manual[5], Lindee

[2] The Leahy-Smith America Invents Act, Pub. L. No. 112–29, 125 Stat. 284 (2011) ("AIA"), included revisions to 35 U.S.C. §§ 102 and 103 that became effective after the effective filing date of the challenged claims. Therefore, we apply the pre-AIA version of 35 U.S.C. §§ 102 and 103.

[3] *Operating Manual: Slicer CCS 904* (English Language Translation), CCS-904_06_2006-07-01_GB / T-07_2005-11-10, by Weber Group, 1–288 (Ex. 1005) asserted as prior art under pre-AIA § 102(b). Pet. 26.

[4] US 5,628,237, issued May 13, 1997 (Ex. 1006) asserted as prior art under pre-AIA § 102(b). Pet. 27.

[5] *Operating Manual for the Slicer CCS 904-02 (for product lengths to 1200 mm / 1600 mm)* (English Language Translation), by Weber Group, 1–259 (Ex. 1009) asserted as prior art under pre-AIA § 102(a). Pet. 27.

Pet. 26–27. In support of its proposed grounds, Petitioner relies on the Declaration of Richard Hooper, Ph.D. *See* Ex. 1003. Patent Owner relies on the Declaration of William S. Howard, Ph.D. *See* Ex. 2019. Petitioner further relies on a Reply Declaration of Richard Hooper, Ph.D. *See* Ex. 1051.

II. LEVEL OF ORDINARY SKILL IN THE ART

Petitioner proposes that a person of ordinary skill in the art ("POSA") would have had "(1) a bachelor's degree (or equivalent) in mechanical engineering (or a similar field) and at least two years of experience working on food processing and/or packaging systems (or in a similar field)" or "(2) at least seven years of experience working on food processing and/or packaging systems (or in a similar field)." Pet. 18 (citing Ex. 1003 ¶ 26). Patent Owner does not contest Petitioner's definition or provide its own proposal. For purposes of this Decision, we adopt Petitioner's proposal because Petitioner's proposed definition is consistent with the level of skill demonstrated in the cited prior art references. *See Okajima v. Bourdeau*, 261 F.3d 1350, 1355 (Fed. Cir. 2001).

III. CLAIM CONSTRUCTION

Claim 1's limitation 1.2 and claim 9's limitation 9.3 recite in part "a food article feed apparatus *disposed over* the food article loading apparatus." The Federal Circuit reversed the construction set forth in the prior FWD and held that the "disposed over" limitation "requires only that the feed apparatus be generally positioned above the loading apparatus." *Weber*, 92 F.4th at 1070. We follow the Federal Circuit's construction of "disposed over" in this decision. We need not provide an express construction for any other claim terms to resolve the dispute before us.

Nidec Motor Corp. v. Zhongshan Broad Ocean Motor Co., 868 F.3d 1013, 1017 (Fed. Cir. 2017) (noting that only terms that are in controversy need to be construed, and then only to the extent necessary to resolve the controversy). We note, though, that in reaching our conclusion, we apply the ordinary and customary meaning to all claim terms. 37 C.F.R. § 42.100(b) (2019).

IV. CITED PRIOR ART REFERENCES

In the prior FWD, we decided that the 2006 904 Operating Manual and 2010 904 Operating Manual were not "printed publications" under 35 U.S.C. § 311(b). Paper 67, 25–38. The Federal Circuit reversed that determination, and held that these manuals are "printed publications." *Weber*, 92 F.4th at 1069. In accord with the Federal Circuit's decision, we now address the content of these publications in combination with Lindee.

A. 2006 904 Operating Manual

The 2006 904 Operating Manual describes operations of Petitioner's CCS 904 food slicer. Ex. 1005, 3–9. Figure 6 is reproduced below:

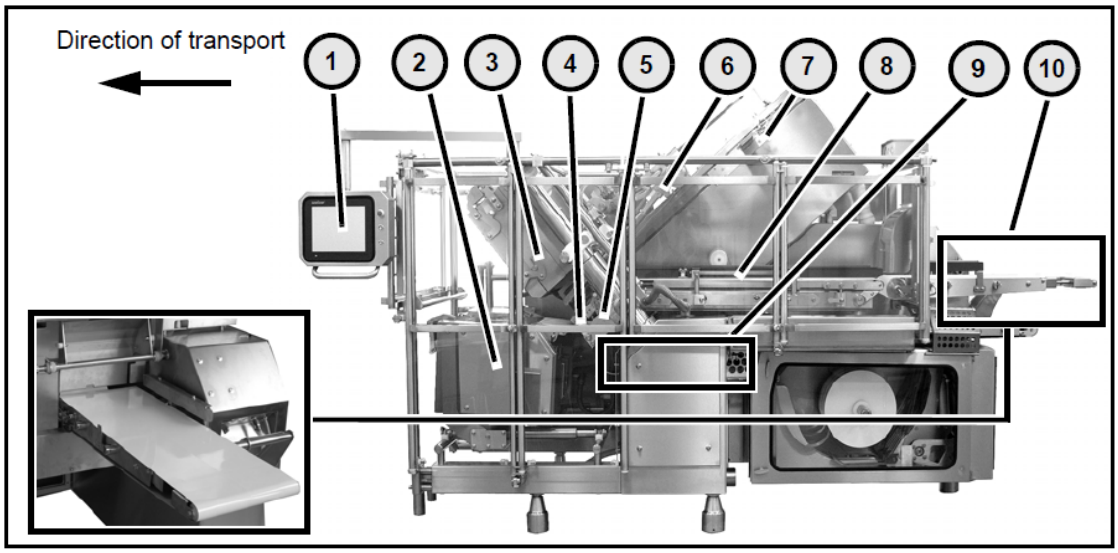

Fig. 6 Machine overview (for product lengths up to 1200 mm)

In the slicer illustrated in Figure 6, element 3 refers to a blade head housing, which contains a blade head drive, a blade head, and an involute blade. *Id.* at 15–16. Element 4 refers to a shear bar and product-section guide where the products are sliced. *Id.* Element 5 is a product bed conveyor that supports the guidance and transport of the product up to the shear bar, and serves as a product limit stop when the slicer is loaded, and as a last piece ejection flap to eject product's end pieces from the product holder. *Id.* Element 6 is an upper product guide for pressing on the products from above to facilitate even transport into the slicing area. *Id.* Element 7 refers to product holders for gripping the products, feeding them into the outlet and preventing them from falling out during slicing. *Id.* Element 8 is a product conveyor for feeding the products into the slicing area. *Id.* Element 9 is an end piece removal conveyor for moving end pieces of the products out of the slicing area. *Id.* Finally, element 10 is a timing belt used by the operator or by a module connected upstream to feed products to the slicer. *Id.*

Figure 7 is reproduced below:

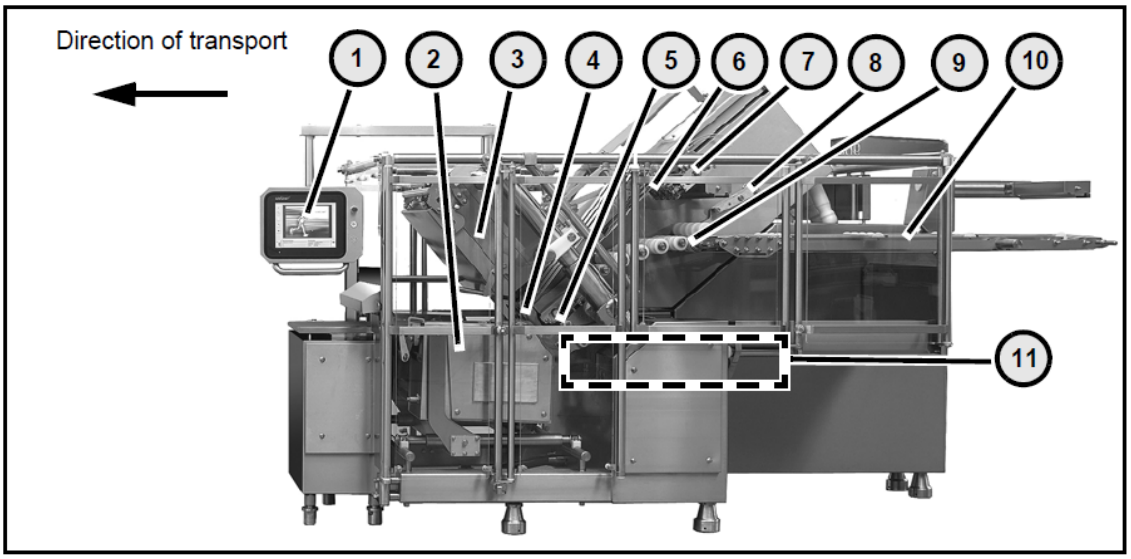

Fig. 7 Machine overview (for product lengths exceeding 1200 mm)

The slicer illustrated in Figure 7 includes elements 1–7, which are similar to elements 1–7 of the slicer illustrated in Figure 6. In addition, the slicer of Figure 7 includes a blank holder (element 8) that presses the product on to the transport tracks and thus supports an even and safe guidance of the product. *Id.* at 17–18. Element 9 is an end piece ejection flap for guiding the product into the slicing area and enabling the end piece to be ejected. *Id.* Element 10 is a product conveyor for feeding products into the slicing area. *Id.* Element 11 is an optional end piece removal conveyor for moving the first slices or the end pieces of the products out of the slicing area. *Id.*

Figures 28 and 29 of the 2006 904 Operating Manual, reproduced below, illustrate a slicing process and a process of ejecting end pieces. *Id.* at 40.

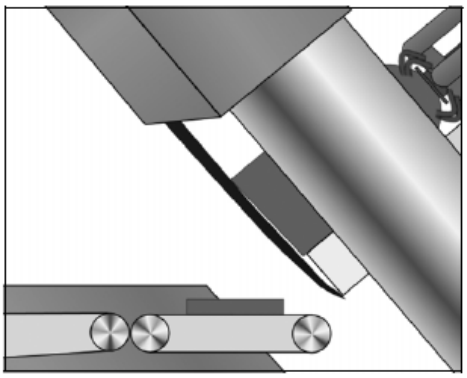

Fig. 28 Slicing process

Figure 28 illustrates a slicing process for products fed to the blade. *Id.*

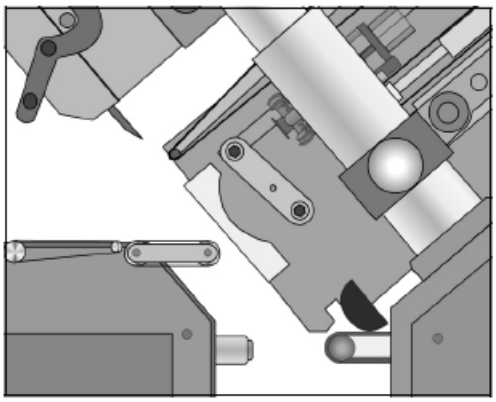

Fig. 29 Ejecting end pieces

The ejection process illustrated in Figure 29 (i) pulls back the end pieces of the products using the product holder, (ii) pivots the product bed conveyor into the ejection position, and (iii) uses the product holder to let the end pieces fall such that (iv) the end pieces fall on to the end piece removal conveyor and are removed. *Id.*

B. 2010 904 Operating Manual

The 2010 904 Operating Manual describes the operations of Petitioner's CCS 904-02 food slicer. Ex. 1009, 1, 3–8. According to Petitioner, the 2010 904 Operating Manual is "substantively identical" to the 2006 904 Operating Manual except that it describes "an additional, optional feature that enables each of the upper conveyors (i.e., the 'product guide') to

be independently driven by separate drive motors." Pet. 9 (citing Ex. 1009, 166; Ex. 1003 ¶¶ 45–46). Because the drive motors are the focus of Petitioner's reliance on the 2010 904 Operating Manual, our summary below centers on that feature.

Figure 211 of the 2010 904 Operating Manual is reproduced below:

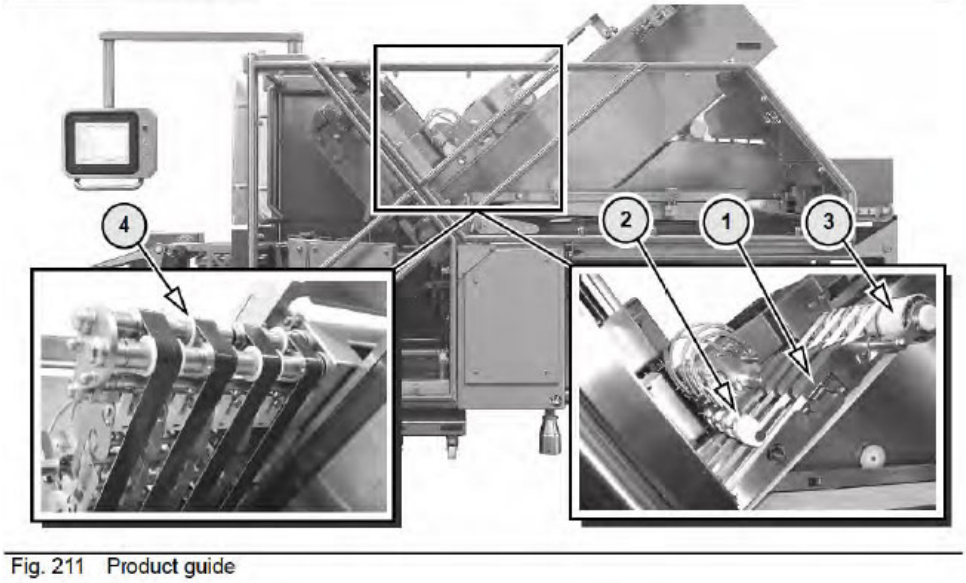

Fig. 211 Product guide

Figure 211 shows support frames (element 1), a cylinder holder (element 2), and a standard drive unit (element 3) or an optional drive unit with separate drives (element 4). Ex. 1009, 166. With the standard drive unit, all tracks of the product guide are driven at the same speed by the drive unit. *Id.* In the optionally available version of the slicer with separate drives, all tracks of the product guide can be individually driven with different speeds. *Id.*

C. Lindee

Lindee describes a high-speed slicing machine for two or more food loaves. Ex. 1006, codes (54), (57). Lindee's high-speed slicing machine supports first and second food loaves for movement along parallel loaf paths into a slicing station where both loaves are sliced by a cyclically driven knife

blade, the slices being stacked or shingled in groups on a receiving conveyor located below the slicing station. *Id.* Figure 3 is reproduced below:

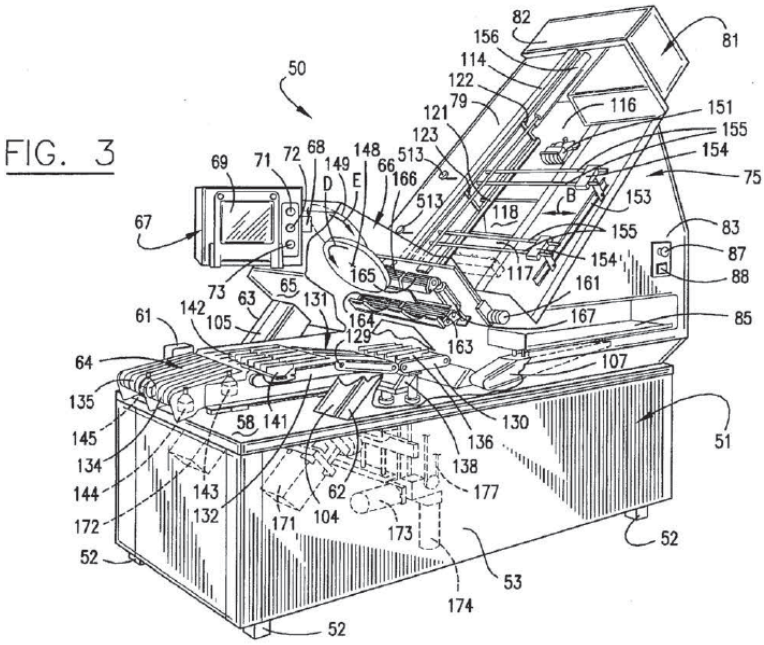

Figure 3 illustrates Lindee's slicing machine. *Id.* at 3:20–33. Slicing machine 50 in Lindee's Figure 3 includes, *inter alia*: a slicing station 66; a knife blade 149; a loaf feed mechanism 75 which includes manual or automated feeds from the near and far sides of the slicing machine; and gripper mechanisms 151 at the near and far sides of the slicing machine. *Id.* at 7:51–8:17. Grippers 151, one on each loaf path, grip the end of a loaf remote from the slicing station, and for each gripper, a loaf feed drive impels the gripper toward the slicing station and then moves the gripper back to a home position, releasing an unsliced loaf butt on the way through a door opening in the loaf support. *Id.* at 19:55–20:53.

V. ANALYSIS OF GROUNDS

A. Legal Standards for Obviousness

In *Graham v. John Deere Co. of Kansas City*, 383 U.S. 1 (1966), the Supreme Court set out a framework for assessing obviousness under § 103 that requires consideration of four factors: (1) the "level of ordinary skill in the pertinent art," (2) the "scope and content of the prior art," (3) the "differences between the prior art and the claims at issue," and (4) "secondary considerations" of nonobviousness such as "commercial success, long felt but unsolved needs, failure of others, etc." *Id.* at 17–18; *KSR Int'l Co. v. Teleflex Inc.*, 550 U.S. 398, 407 (2007). We discussed the first *Graham* factor in Section II and the second *Graham* factor in Section IV. The record includes no evidence or arguments relating to the fourth *Graham* factor. We address the third *Graham* factor in the obviousness analysis and conclusion below.

B. Ground 1: Obviousness Based on the 2006 904 Operating Manual and Lindee

We now address Petitioner's and Patent Owner's contentions regarding claim 1 of the '436 patent. For the reasons that follow, we determine that Petitioner has shown that claim 1 would have been obvious over the combination of the 2006 904 Operating Manual and Lindee in light of the Federal Circuit's decision notwithstanding Patent Owner's arguments to the contrary.

1. Claim 1

The limitations of claim 1 are addressed below sequentially, addressing the parties' contentions for each limitation.

a) Preamble 1.p: Slicing Machine

The preamble 1.p of claim 1 recites "A food article slicing machine, comprising:"

Petitioner contends that the 2006 904 Operating Manual discloses that the 904 slicer is a machine that slices food products ("food articles") and is thus a "food article slicing machine" as recited in claim 1's preamble 1.p. Pet. 29 (citing Ex. 1005, 10–11; Ex. 1003 ¶¶ 95–96).

Petitioner further asserts that Lindee discloses that its "invention relates to an improved high speed food loaf slicing machine" and thus discloses the preamble 1.p of claim 1. *Id.* at 30 (citing Ex. 1006, 2:13–14; Ex. 1003 ¶¶ 97–98).

Patent Owner does not dispute Petitioner's contentions concerning the preamble.

We agree with Petitioner and find that the preamble of claim 1 is disclosed by each of the slicing machines disclosed in 2006 904 Operating Manual and Lindee. Thus, we need not and do not decide whether the preamble is limiting.

b) Limitation 1.1: Loading Apparatus

Limitation 1.1 of claim 1 recites "a food article loading apparatus with a lift tray assembly for moving food articles from a staging position to an elevated position at a beginning of a food article feed path."

Petitioner contends that the 2006 904 Operating Manual discloses a timing belt into which food articles are loaded. Pet. 31. According to Petitioner, "[a] product conveyor belt (also called a "product conveyor") is lowered to a staging position to receive food articles from the timing belt." *Id.* (citing Ex. 1005, 39–30; Ex. 1003 ¶¶ 101–102).

Petitioner's annotated Figure 5 from the 2006 904 Operating Manual is shown below.

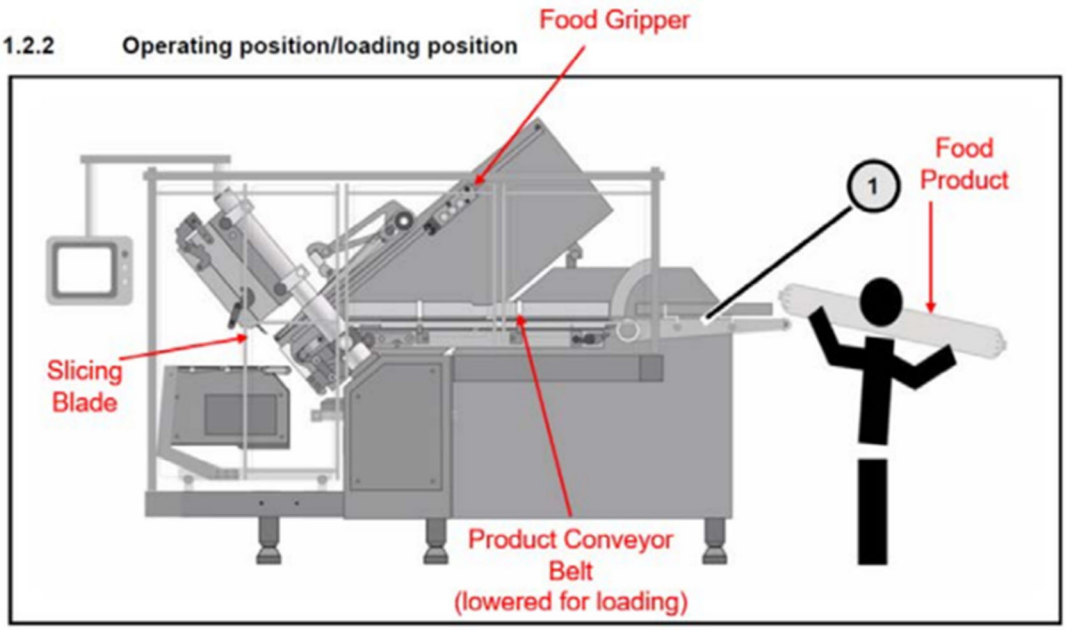

Fig. 5 Operating position/loading position

Pet. 31. Petitioner contends that annotated Figure 5 shows the product conveyor belt in the staging position in which food product is loaded on the timing belt "(1)" which transfers the food product to the product conveyor. *Id.*

Petitioner's annotated Figure 14 from the 2006 904 Operating Manual is shown below.

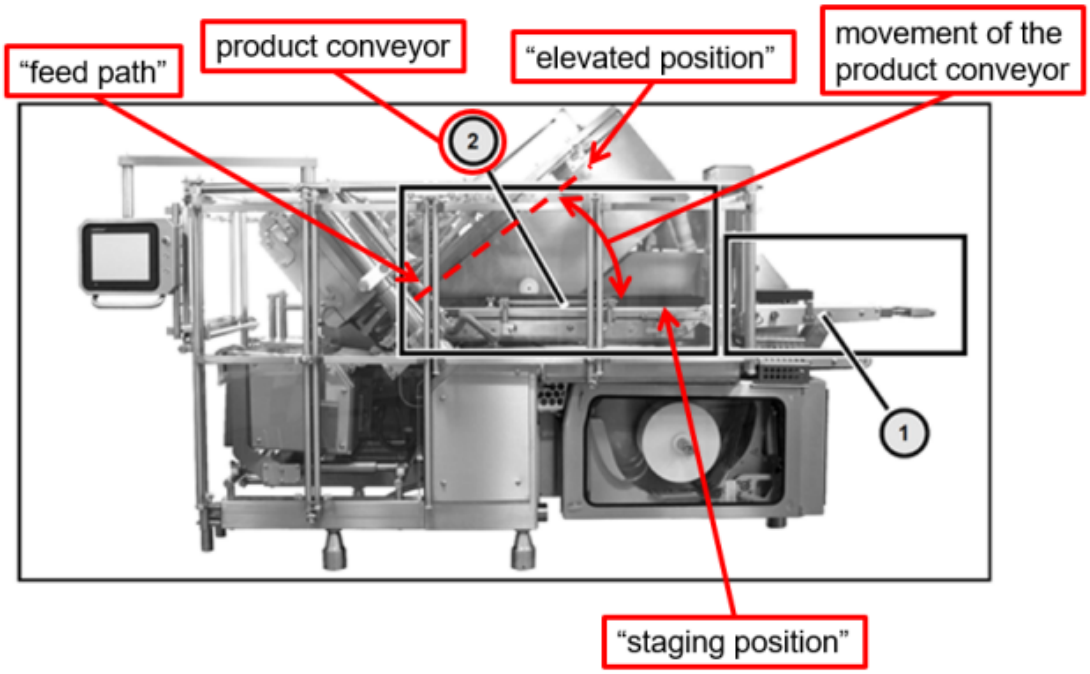

Pet. 32. Petitioner asserts that annotated Figure 14 of the 2006 904 Operating Manual discloses that the claimed "lift tray assembly for moving food articles from a staging position to an elevated position at a beginning of a food article feed path.'" *Id.* at 31–32 (citing Ex. 1005, 40; Ex. 1003 ¶ 101).

Petitioner asserts that "[t]he combination of the product conveyor belt, timing belt, and related actuators and supporting structure disclose the claimed 'food article loading apparatus' because these elements work together to load food articles into the feed path for slicing." *Id.* (citing Ex. 1003 ¶ 101).

Patent Owner does not dispute Petitioner's contentions that the 2006 904 Operating Manual discloses the "food article loading apparatus" of claim 1's limitation 1.1.

We agree with Petitioner that the product conveyor belt, timing belt, and related actuators and supporting structure shown and described in the 2006 904 Operating Manual discloses the "food article loading apparatus" of claim 1's limitation 1.1.

Petitioner further contends that Lindee discloses the "food article loading apparatus" of claim 1's limitation 1.1. Pet. 33. Specifically, Petitioner asserts that Lindee discloses a lift tray 85 that loads a food loaf into loaf feed mechanism 75. *Id.* (citing Ex. 1006, 4:61–5:5, Figs. 1–2). Petitioner states that Lindee's lift tray 85 is actuated by a mechanism 107 that pivots lift tray 84 up from its lower position to an elevated position aligned with loaf feed mechanism 75. *Id.* (citing Ex. 1006, 5:63–6:2, Fig. 1; Ex. 1003 ¶ 103). Petitioner contends that Lindee's lift tray 85 and its corresponding actuators and support structure (including mechanism 107) constitute the claimed "food article loading apparatus" because these components of Lindee's system "move food articles form a staging position to an elevated position" as claimed. *Id.* (citing Ex. 1003 ¶¶ 103–105).

Patent Owner does not dispute Petitioner's contentions that Lindee discloses the "food article loading apparatus" of claim 1's limitation 1.1.

We agree with Petitioner and find that Lindee's lift tray 85 with its actuators and supporting structure discloses the "food article loading apparatus" of claim 1's limitation 1.1.

c) Limitation 1.2: Feed Apparatus Disposed Over Loading Apparatus

Limitation 1.2 of claim 1 recites "a food article feed apparatus disposed over the food article loading apparatus having an upper conveyor assembly with a driven endless conveyor belt used in cooperation with a

food article gripper for moving the food articles along the food article feed path."

The Federal Circuit determined that the "disposed over" limitation requires only that the "feed apparatus be generally positioned above the loading apparatus." *Weber*, 92 F.4th at 1070. On appeal, Patent Owner did not dispute that Petitioner's "asserted prior art satisfies this limitation" under Petitioner's construction, which the Federal Circuit determined to be the correct construction. *Id*. Accordingly, the Federal Circuit determined that Petitioner's asserted prior art disclosed the "disposed over" limitation. *Id.*

We now consider Petitioner's contentions for the remaining part of limitation 1.2 which requires that the "food article loading apparatus [has] an upper conveyor assembly with a driven endless conveyor belt used in cooperation with a food article gripper for moving the food articles along the food article feed path."

Petitioner contends that the 2006 904 Operating Manual discloses "a food article feed apparatus disposed over the food article loading apparatus . . . with a food article gripper." Pet. 33.

Specifically, Petitioner contends that the 2006 904 Operating Manual discloses that, after the product conveyor raises the food articles into the feed path, the "product holder grips the loaded product and guides it into the slicing area." Pet. 33–34 (citing Ex. 1005, 23, 40). Petitioner asserts that a POSA would have understood that a product holder is a "food article gripper" under the term's plain and ordinary meaning "because the product holder grips the food articles and feeds them into the slicing station." Pet. 34 (citing *id.* at § IV.A; Ex. 1003 ¶ 107).

To illustrate its contentions, Petitioner reproduces Figure 12 of the 2006 904 Operating Manual, shown below.

1.6.4 Product holder

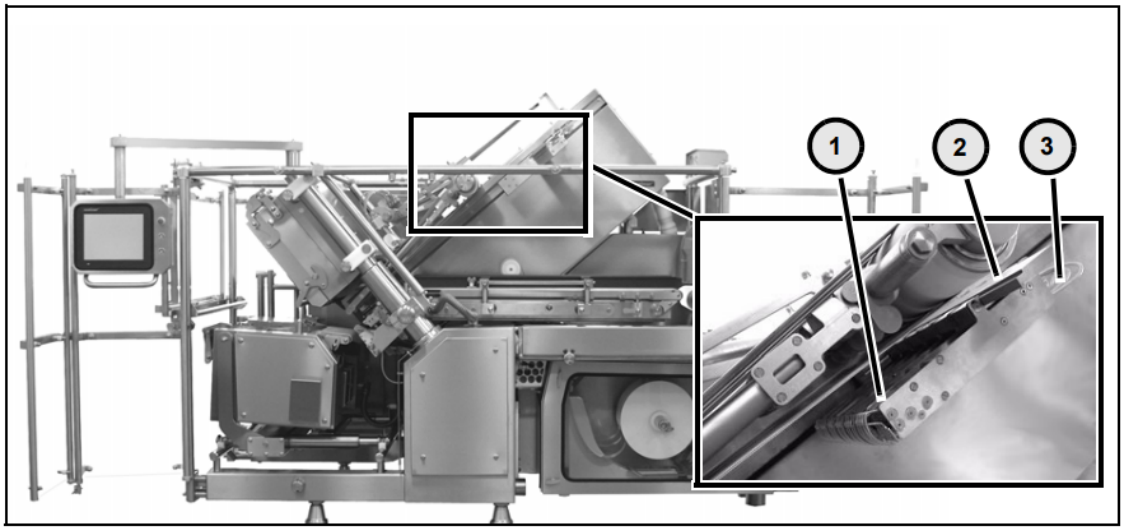

Fig. 12 Position of the product holder on the Slicer

Ex. 1005, 23. Petitioner contends that the product holder is visible as element (1) in Figure 12 of the 2006 904 Operating Manual. Pet. 34 (citing Ex. 1003 ¶ 107). Petitioner asserts that "[t]he product holder has the claimed function of 'moving the food articles along the food article feed path' because it 'guides the food product into the slicing area' along the feed path." *Id.* (citing Ex. 1005, 40; Ex. 1003 ¶ 107).

Petitioner contends that "[t]he product holder works together with the 'upper product guide' to guide the food to the slicing blade. *Id.* at 34 (citing Ex. 1005, 22, 40; Ex. 1003 ¶ 107). According to Petitioner, "[t]he upper product guide is a conveyor belt that presses down on the food article from above and helps transport the food article toward the slicer blade." *Id.* at 34–35 (citing Ex. 1005, 15, 40; Ex. 1003 ¶ 107).

Petitioner asserts that "[t]he product holder, upper product guide, and related actuators form the claimed 'food article feed apparatus' because they comprise an apparatus that functions to feed the food into the slicing blade." *Id.* at 35 (citing Ex. 1005, 10, Fig. 5 (annotated) (*see* § V.B.1.c)).

Petitioner contends that the product holder and upper product guide are located above the product bed conveyor and timing belt. *Id.* (citing Ex. 1003 ¶ 107). Thus, Petitioner asserts, the food article feed apparatus is "disposed over" the food article loading apparatus. *Id.* (citing Ex. 1003 ¶ 107).

In addition, Petitioner contends that Lindee discloses "a food article feed apparatus . . . having an upper conveyor assembly with a driven endless conveyor belt used in cooperation with a feed article gripper for moving the food articles along the food article feed path" as recited in claim 1's limitation 1.2. Pet. 36.

Specifically, Petitioner contends that "Lindee discloses a food slicer [with] a food gripper mechanism 151 to grip food products and advance [them] down an inclined support surface to a slicing blade." *Id.* (citing Ex. 1006, 8:65–9:46; Ex. 1003 ¶ 109). To further explain its contentions, Petitioner provides an annotated version of Lindee's Figure 3 below.

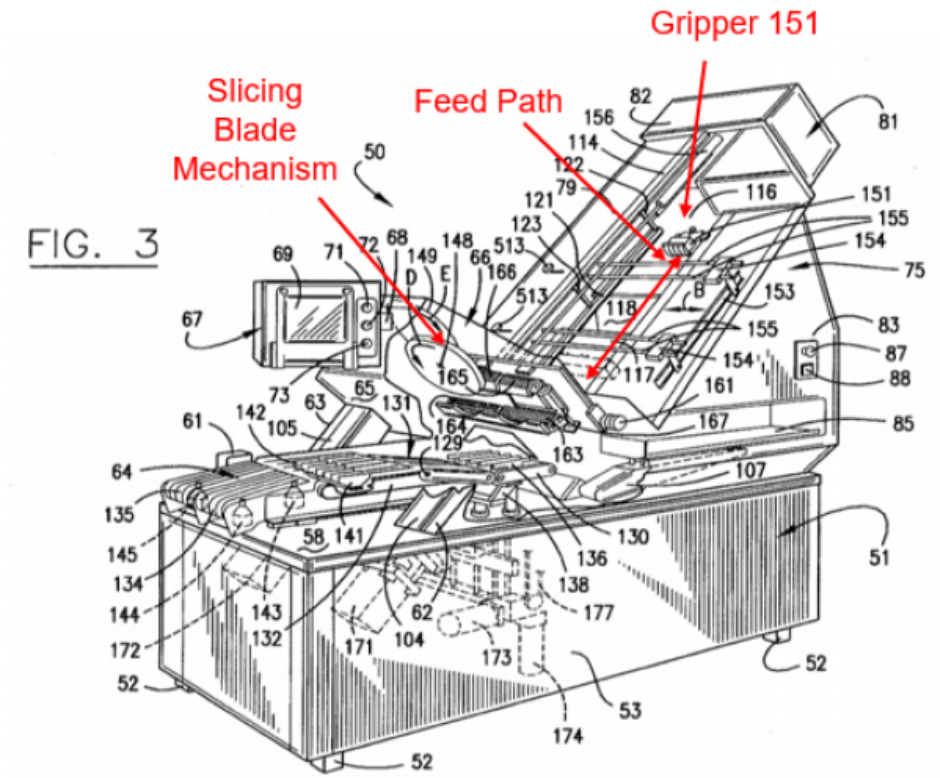

According to Petitioner, annotated Figure 3 of "Lindee discloses that the food grippers are driven along the feed path by a timing belt 334." Pet. 36–37 (citing Ex. 1006, 18:32–35; 19:55–67).

Petitioner provides an annotated version of Lindee's Figure 7A below.

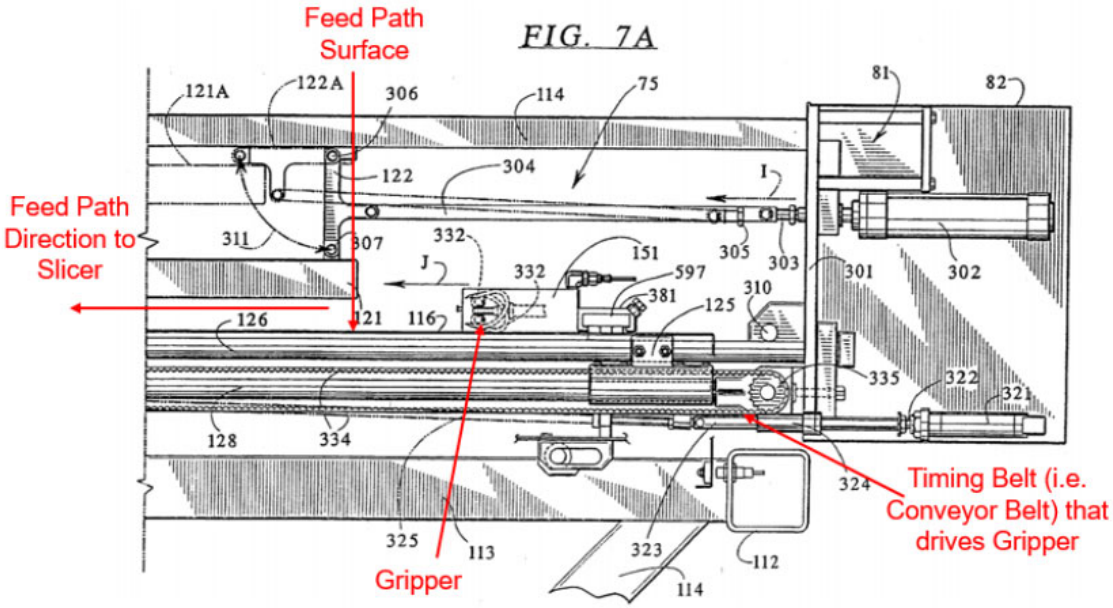

Petitioner contends that Lindee's Figure 7A shows that "gripper 151 is mounted on an extension 597 of carriage 125" and "[c]arriage 125 is connected to the upper run of a timing belt 334." Pet. 36–37 (citing Ex. 1006, 18:18–22, 18:33–34). According to Petitioner, "[t]he gripper is connected to and supported by carriage 125, which slides along shafts 126 and 128 as timing belt 334 carries carriage 125 along the feed path." *Id.* at 37 (citing Ex. 1003 ¶¶ 110–111). Petitioner thus contends that "Lindee discloses a food gripper that is mechanically connected to and driven by timing belt 334 along the feed path." *Id.* (citing Ex. 1003 ¶¶ 110–111).

Petitioner asserts that a "POSA would have understood that timing belt 334 is a conveyor belt because timing belt 334 is a belt that is stretched between an idler sprocket 335 and a drive sprocket 180, which is the type of structure that defines a conveyor belt." *Id.* (citing Ex. 1006, 18:34–37; Ex. 1003 ¶ 110). Petitioner states that "[t]his type of conveyor belt is 'endless' as claimed because the belt wraps in a continuous loop around the two sprockets." *Id.* (citing Ex. 1003 ¶ 110). Accordingly, Petitioner contends that Lindee discloses "a food article feed apparatus . . . having an upper conveyor assembly with a driven endless conveyor belt used in cooperation with a food article gripper for moving the food articles along the food article feed path" as recited in claim 1's limitation 1.2. *Id.* at 37–38 (citing Ex. 1003 ¶ 112).

Patent Owner disputed the "disposed over" limitation at trial (Resp. 45–49) but did not provide any arguments concerning the remaining part of limitation 1.2 reciting that the "food article loading apparatus [has] an upper conveyor assembly with a driven endless conveyor belt used in cooperation with a food article gripper for moving the food articles along the food article feed path."

In light of the Federal Circuit's decision that Petitioner's asserted prior art discloses the "disposed over" limitation, and Petitioner's contentions for the remaining part of limitation 1.2, we find that Petitioner has shown that limitation 1.2 is disclosed by the combination of the 2006 904 Operating Manual and Lindee.

d) Limitation 1.3: Slicing Station

Limitation 1.3 of claim 1 recites "a slicing station at an end of the food article feed path with a knife for slicing the food articles."

Petitioner contends that the 2006 904 Operating Manual discloses that "[t]he slicing area of the [904] Slicer consists of assemblies that are used to directly slice the product" including a "blade." Pet. 38 (citing Ex. 1005, 11). Petitioner asserts that "[a] POSA would have understood that the disclosed blade in the 2006 904 [Operating Manual] is synonymous with the claimed 'knife.'" *Id.* (citing Ex. 1003 ¶ 115). Petitioner provides Figure 2 of the 2006 904 Operating Manual below.

1.1.2 Slicing area

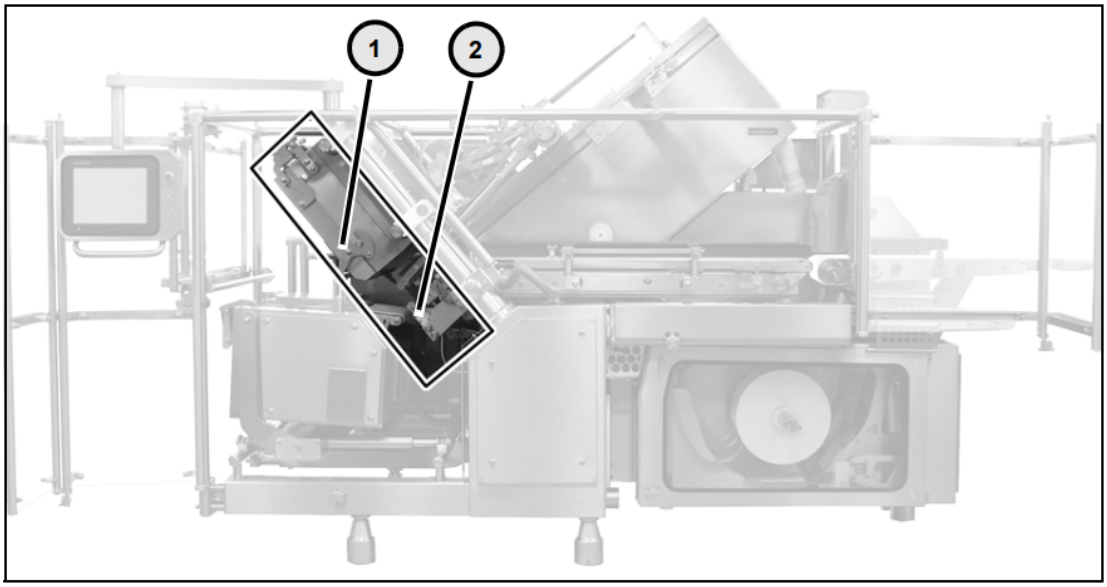

Fig. 2 Slicing area

Pet. 38. Petitioner contends that Figure 2 discloses that "the slicing area (i.e., the claimed "slicing station") is located at the end of the food article feed path near the bottom of the inclined feeding section of the slicer." *Id.* (citing Ex. 1005, Fig. 2; Ex. 1003 ¶ 115). Petitioner thus asserts that the 2006 904 Operating Manual discloses claim 1's limitation 1.3. We agree with Petitioner that the 2006 904 Operating Manual discloses the "slicing station" of claim 1's limitation 1.3.

Petitioner also relies on Lindee to disclose claim 1's limitation 1.3. Pet. 39. Specifically, Petitioner asserts that "Lindee discloses a 'slicing station 66' that includes a 'round knife blade 149.'" Pet. 39 (citing Ex. 1006, 7:51–64). Petitioner states that Lindee's "knife blade is used 'for repetitive slicing' of the food loaves." *Id.* (citing Ex. 1006, 2:19–20). Petitioner further contends that "[a]s shown in [Lindee's] Fig. 3, the slicing station is disposed at the end of the food article [feed] path (near the left hand side of the machine in Fig. 3)." *Id.* (citing Ex. 1003 ¶ 118). Petitioner argues that, accordingly, Lindee discloses limitation 1.3 of claim 1.

Patent Owner does not dispute Petitioner's contentions regarding limitation 1.3.

We agree with Petitioner's contention that the 2006 904 Operating Manual's slicing area and Lindee's slicing station 66 each disclose claim 1's limitation 1.3. Specifically, we find that each constitutes a station at the end of a food article feed path that has a knife blade for slicing food articles.

e) Limitation 1.4: Stop Gate

Limitation 1.4 of claim 1 recites "a food article stop gate disposed upstream of the slicing station that forms a portion of the food article feed path."

Petitioner provides the following annotated version of Figure 227 of the 2006 904 Operating Manual.

5.12.1 Product bed conveyor (product length up to 1200 mm)

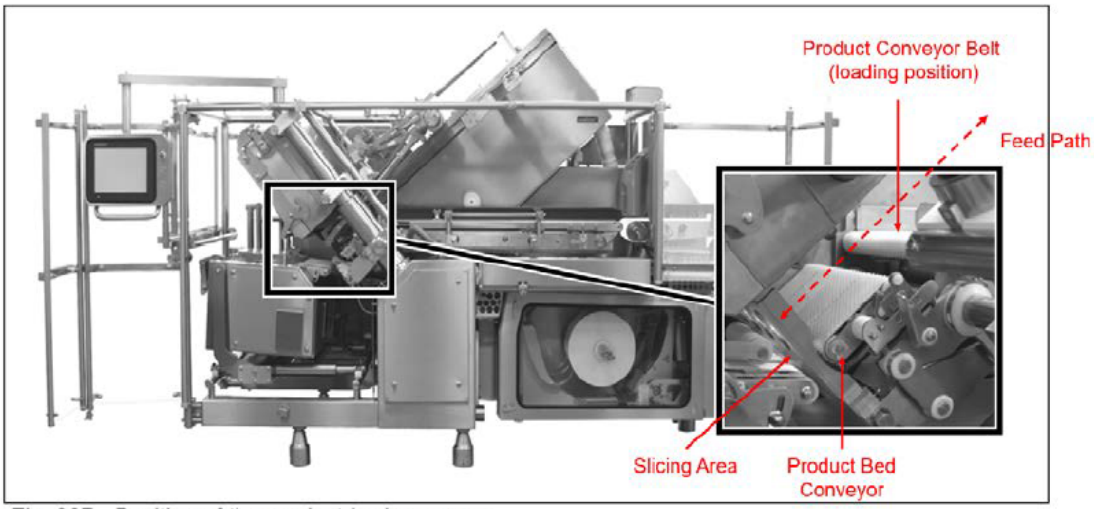

Fig. 227 Position of the product bed conveyor

Pet. 40. Petitioner contends that Figure 227 of the 2006 904 Operating Manual discloses a "product bed conveyor" that is upstream of the slicing station. *Id.* at 39 (citing Ex. 1006, 21; Ex. 1003 ¶ 120). Petitioner contends that the "product bed conveyor" discloses the claimed "food article stop gate." *Id.* (citing Ex. 1003 ¶¶ 121–122).

Specifically, Petitioner asserts that the 2006 904 Operating Manual discloses "a product limit stop [that] prevents the products from sliding into the outlet [beyond the slicing station] in an uncontrolled manner" when it is pivoted to a vertical position. *Id.* at 41 (citing Ex. 1005, 21; Ex. 1003 ¶ 127). Petitioner argues that "the product bed conveyor discloses stopping the food products during the loading process to prevent products from sliding into the slicing area." *Id.* (citing Ex. 1003 ¶ 124). Petitioner states that the 2006 904 Operating Manual also states that "[i]n order for all [food] products to be aligned flush with each other for the slicing operation, they are *pressed* against the product bed conveyor" and "[t]o do this, the product

bed conveyor is in a vertical position." *Id.* at 41–42 (citing Ex. 1005, 40) (emphasis original). Petitioner argues that the 2006 904 Operating Manual "explicitly discloses using the product bed conveyor as a 'stop gate' as claimed by pressing the food products against the product bed conveyor and, therefore, stopping the food products from advancing." *Id.* at 42 (citing Ex. 1003 ¶¶ 124, 127). Petitioner asserts that the 2006 904 Operating Manual discloses claim 1's limitation 1.4. *Id.*

Patent Owner does not dispute Petitioner's contentions regarding limitation 1.4.

We agree with Petitioner and find that the 2006 904 Operating Manual's product bed conveyor discloses claim 1's limitation 1.4 for the reasons that Petitioner mentions.

f) Limitation 1.5: Support by Stop Gate When Lift Tray Assembly Is Moved When in Elevated Position

Limitation 1.5 of claim 1 recites "wherein the food articles are supported in position along the food article feed path by at least the food article stop gate when the lift tray assembly is moved when in its elevated position."

Petitioner contends that "the product bed conveyor 'supports the transport of the [food] product up to the shear bar' by forming the floor of the feed path upstream of the slicer station." Pet. 42 (citing *id.* at § VI.A.5; Ex. 1005, 21, Fig. 10; Ex. 1003 ¶ 127). According to Petitioner, "[t]his support occurs when the lift tray (i.e., the product conveyor) is pivoted up to its elevated (or infeed) position." *Id.* (citing Ex. 1003 ¶ 127).

Petitioner further asserts that

> To the extent that patentee argues that this claim element requires that the stop gate also provide lateral support, which is support in the food article feed direction (instead of the support created

> by acting as a floor discussed above), the product bed conveyor explicitly provides this support when the product conveyor is moving to the elevated position as discussed in Section VI.A.5.

Pet. 42 (citing Ex. 1003 ¶ 127). Accordingly, Petitioner alleges, the 2006 904 Operating Manual discloses claim 1's limitation 1.5. *Id.* (citing Ex. 1003 ¶ 128).

Patent Owner argued during the trial that the 2006 904 Operating Manual does not disclose limitation 1.5. Resp. 49–52. The Federal Circuit held, however, that the evidence adduced at trial, including Figures 10 and 227 of the 2006 904 Operating Manual, and Weber's expert's testimony, established that limitation 1.5 is disclosed by the 2006 904 Operating Manual. *Weber*, 92 F.4th at 1070–1072.

g) Limitation 1.6: Stop Gate Opens to Drop End Portions

Limitation 1.6 recites "wherein the food article stop gate also opens to drop food article end portions."

Specifically, Petitioner contends that the 2006 904 manual discloses a process for ejecting end pieces of food articles. Pet. 43. Petitioner quotes the 2006 904 Operating Manual, which states:

> Ejection of the end pieces
> - The end pieces of the products are pulled back by the product holder
> - The product bed conveyor pivots into the ejection position.
> - The product holder lets the end pieces fall.

Id. (citing Ex. 1005, 40).

Petitioner provides an annotated version of Figure 29 of the 2006 904 Operating Manual, shown below:

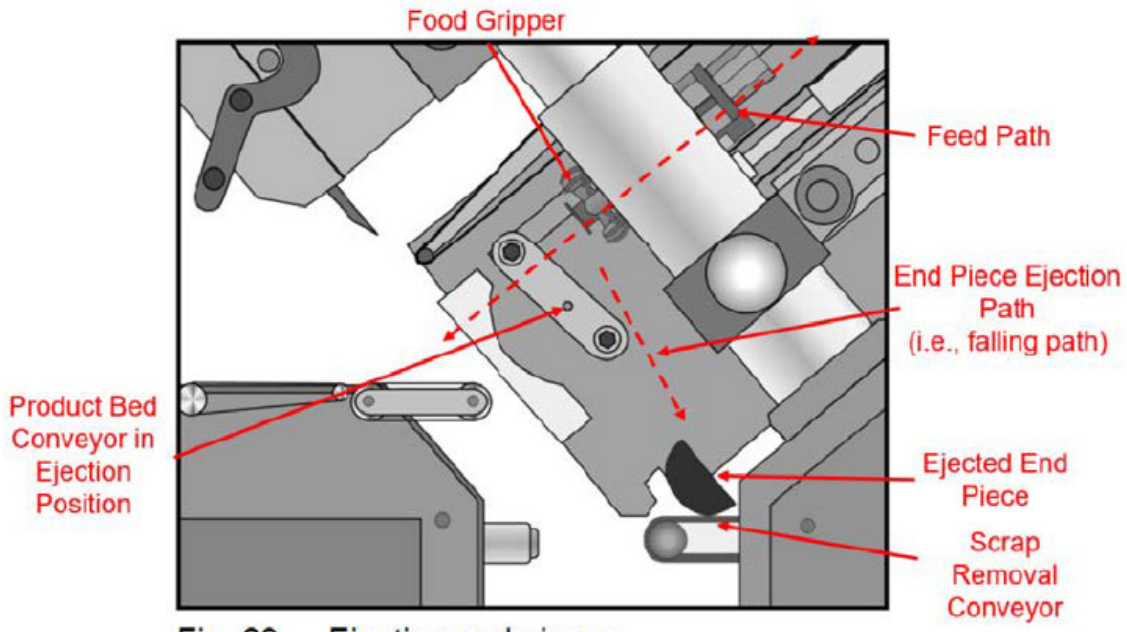

Fig. 29 Ejecting end pieces

Petitioner contends that annotated Figure 29 "shows an end piece having dropped through the gap created, at least in part, by the product bed conveyor pivoting open." Pet. 43 (citing Ex. 1003 ¶ 130).

Accordingly, Petitioner asserts, the 2006 904 Operating Manual discloses limitation 1.6. *Id.* (citing Ex. 1003 ¶¶ 129–131).

Patent Owner does not dispute Petitioner's contentions concerning limitation 1.6.

We agree with Petitioner that the 2006 904 Operating Manual discloses claim 1's limitation 1.6 for the reasons that Petitioner provides.

h) Motivation to Combine

Petitioner contends that a POSA would have been motivated to combine Lindee's conveyor gripper actuation system with the 2006 904 Operating Manual's gripper system for several reasons. Pet. 44–47.

Specifically, Petitioner contends that a POSA "starting with the food slicer of the 2006 904 [Operating Manual]" "would have been motivated to obtain references that taught systems and methods for actuating food article

grippers along feed paths of slicers." Pet. 44 (citing Ex. 1003 ¶¶ 132–137). Petitioner asserts that a POSA would thus have been led to consider Lindee's food slicer, which "uses a food gripper mechanism 151 to grip and advance food products down an inclined surface to a slicing blade." *Id.* (citing Ex. 1006, 8:65–9:46; Ex. 1003 ¶ 134).

Petitioner also contends that a POSA would have been motivated to use gripper actuation using mechanical details of Lindee's timing belt with the product holder of the 2006 904 Operating Manual to feed food loaves into the slicer using functionality that is "substantively identical." *Id.* at 44–45 (citing Ex. 1003 ¶ 137).

Petitioner further asserts that the 2006 904 Operating Manual and Lindee are from the "same field of technological invention (i.e., food slicers)" and disclose food slicers that are highly similar in how their grippers feed food product into their slicers. Pet. 45 (citing Ex. 1003 ¶ 135).

Petitioner contends that its proposed modification "would have been a simple combination of known prior art elements (i.e., the timing belt actuation system of Lindee and the 2006 904 manual's product holder) to achieve predictable results (i.e., actuation of the product holder along the feed path)." *Id.* (citing Ex. 1003 ¶ 135; *KSR*, 550 U.S. at 416).

Petitioner further contends that the proposed modification would have been a simple substitution of one known element (the implied actuator of the 2006 904 Operating Manual) for another (Lindee's timing belt) to obtain a predictable result (actuation of the product holder)." *Id.* at 45–46 (citing Ex. 1003 ¶ 137; *KSR*, 550 U.S. at 401).

In addition, Petitioner contends that its proposed modification would have been the use of a known technique (Lindee's independently driven grippers) to improve a similar device (the 904 slicer's grippers). *Id.* at 46

(citing Ex. 1003 ¶ 135; *KSR*, 550 U.S. at 417). Petitioner asserts that "Lindee discloses that its conveyor actuation system allows the feed rate of each conveyor belt (and corresponding gripper) to be different 'to adjust slice thickness for one load independently of the other'" which "provides the advantage of allowing for different slice thickness when slicing multiple food products." *Id.* (citing Ex. 1006, 9:18–22; Ex. 1003 ¶ 134).

Moreover, Petitioner asserts that "a POSA would have been motivated to add Lindee's conveyor system to the upper portion of the 2006 904 [Operating Manual]'s slicer" because that is where the "track is that supports the product holder. Pet. 46–47 (citing Ex. 1005, Fig. 12; Ex. 1003 ¶ 136). Petitioner asserts that Lindee's conveyor belt would be located in the upper portion of the 904 slicer and thus would constitute an "upper" conveyor assembly as claimed. *Id.* at 47 (citing Ex. 1003 ¶ 136).

Patent Owner argued during the trial that a POSA would not have been motivated to add Lindee's lower timing belt system to the upper conveyor assembly of the 2006 904 Operating Manual. Resp. 36–44. Specifically, Patent Owner asserted that the 2006 904 Operating Manual already taught how to actuate the product holder grippers using a ball screw, and did not require Lindee's timing belt for actuation. *Id.* at 37–40.

However, Petitioner demonstrated that a POSA would have recognized that conveyor belts and ball screws were well known, interchangeable solutions for gripper actuation, and that using a belt drive system would reduce the possibility of contaminants through reduced lubrication requirements and improved cleanliness. Reply 10–11 (citing Ex. 1003 ¶ 137; Ex. 1062, 129:21–25; Ex. 1051 ¶¶ 50–54). Petitioner's evidence shows that a POSA considering these options would have selected a belt drive system like Lindee's to actuate the grippers in at least some

situations where risk of contamination and cleanliness were relevant concerns.

In addition to the foregoing motivation argument, Patent Owner argued in the trial that Petitioner's combination was not a "simple substitution" of Lindee's timing belt for the 2006 904 Operating Manual's ball screw. Resp. 41–44. Specifically, Patent Owner argued that Petitioner's "redesign would require a POSA to turn Lindee's timing belt system on its head and to work upside-down with the 904 Manuals." *Id.* at 41 (citing Ex. 2019 ¶ 117).

However, Petitioner argues that a POSA would have recognized that a belt-drive system's operation is not dependent on a specific orientation with respect to gravity, and asserts that the Petition does not suggest that Lindee's entire belt-drive system would need to be inverted when combined with the 904 slicer. Reply 12 (citing Ex. 1051 ¶¶ 60–62). Petitioner reiterates that a POSA would add the grippers to the upper portion of the 2006 904 Operating Manual's slicer because that is the location of the track that supports the product holder. Ex. 1003 ¶ 136; Ex. 1051 ¶ 61. Moreover, Petitioner points out that overhead belts were well known to be safe in the food industry, so a POSA would have been motivated to use them. Ex. 1051 ¶ 62. We agree with Petitioner's contentions.

Patent Owner next argues that during prosecution of a related patent application, Patent Owner stated that the use of conveyor belts provides a faster stroke allowing food articles to be processed faster. Resp. 42 (citing Ex. 2020, 7). Patent Owner argues that Petitioner "does not grapple with this intrinsic evidence or account for the engineering needed to realize such benefits." *Id.* (citing Ex. 2019 ¶¶ 110–117).

However, a POSA's motivation to combine need not be the same one that motivated the patentee, so a POSA need not have recognized that conveyor belts provide a faster stroke to support a motivation to combine. *See, e.g.*, *PAR Pharmaceutical, Inc. v. TWI Pharmaceuticals, Inc.*, 773 F.3d 1186, 1197 (Fed. Cir. 2014).

As to engineering, as already noted, Petitioner indicated that conveyor belts were known in the industry to be safe and interchangeable with ball screws, that Lindee's conveyor belt is used for the same purpose in Lindee as in the combination, and that using a known element for the same function in a similar device is obvious absent other complications, which Patent Owner did not identify. Reply 12–13; Ex. 1003 ¶ 137. Moreover, Petitioner asserts that Patent Owner did not explain how Lindee's belt-drive system would function differently in the 2006 904 Operating Manual's slicer. Reply 13 (citing Ex. 1051 ¶¶ 23, 43). Petitioner asserts that Patent Owner "ignores that the 904 Manuals already disclose an upper conveyor system—the upper product guide, as the Petition noted." *Id.* (citing Pet. 34–35). Petitioner's contentions are persuasive.

Patent Owner further asserts that positioning Lindee's timing belt above the food article feed path "would have unacceptably increased the risk of food contamination" because contaminants from the timing belt would fall toward the food articles. Resp. 43. Patent Owner contends that Petitioner recognized that disposing objects above a product feed path, as in Petitioner's proposed redesign can cause contamination of food product from "paper scraps, wood chips, metal parts such as screw parts, fluids or plastic residues." *Id.* (citing Ex. 2025 (U.S. Patent No. 10,227,182), 2:42–56). According to Patent Owner, "[a] POSA would have been acutely aware that for machine components located below the food article path, such

as in Lindee, gravity assists to keep contaminants out of the food path." *Id.* (citing Ex. 2019 ¶ 117). Thus, Patent Owner argues, "a POSA would have had a logical preference to locate a timing belt below the feed path, as in Lindee, and not above the feed path, as in the proposed combination." *Id.*

Petitioner asserts that "[Patent Owner's] allegations run counter to the prior art and ignore the advantages of belt drives over multiple independent ball screw drives" including reduced lubrication requirements and therefore decreased maintenance time and improved cleanliness by allowing easier machine wash down, reducing possible lubrication contamination of the feed path. Reply 10 (citing Ex. 1003 ¶ 137; Ex. 1051 ¶¶ 50–54; Ex. 1062, 129:21–25). Petitioner argues that Patent Owner's expert, Dr. Howard, conceded that lubrication contamination would be reduced or eliminated through the use of belt drives. *Id.* at 10–11 (citing Ex. 2019 ¶ 117; Ex. 1062, 129:21–25). Considering Dr. Howard's testimony that some conveyor belts drives do not require external lubrication (Ex. 1062, 129:21–25), we agree with Petitioner that using such a conveyor belt above the food article feed path would not pose a significant risk of food contamination from lubricant.

Patent Owner further argues that Petitioner is "substantively incorrect that a POSA would have been motivated to make its proposed 'simple substitution' to allow for 'different feed rates for each of the grippers.'" Resp. 44 (citing Pet. 46.). Patent Owner asserts that Petitioner's proposed substitution "would have a single timing belt of Lindee driving the three product holder grippers together as a unit (and not independently driven)." *Id.* (citing Ex. 2017 ¶¶ 127–129).

Petitioner asserts that Patent Owner mischaracterized Petitioner's proposed combination. Reply 11–12. Specifically, Petitioner asserts that the Petition stated that "[a] POSA would have been further motivated to modify

the 904 slicer to include Lindee's conveyor actuation *system* to allow for different feed rates for *each* of the grippers." Reply 11–12 (citing Pet. 46) (emphasis original). Petitioner states that Patent Owner acknowledged in its Response that "Lindee's conveyor actuation system discloses conveyor belts connected to each of its independently driven grippers." *Id.* at 12 (citing Pet. 46; Resp. 33).

Reviewing the Petition, we agree with Petitioner that Patent Owner mischaracterizes Petitioner's proposed combination, which provides separate timing belts of Lindee to drive each of the grippers. Pet. 46. Patent Owner's argument is not directed to the combination that Petitioner proposes, and is therefore unavailing.

Patent Owner argues that, in the prior FWD, we credited Dr. Howard's testimony that a POSA would not have combined the 2006 904 Operating Manual and Lindee because of a lack of any advantage in doing so. Paper 74, 2 (Patent Owner's Brief on Remand). Patent Owner further argues that Petitioner's expert provided three purported motivations: (1) the 2006 904 Operating Manual does not expressly disclose actuation; (2) the advantages of independently driven grippers; and (3) belt drives do not require lubrication or exhibit backlash. *Id.* (citing Ex. 1003 ¶¶ 132–137). Patent Owner contends that we rejected these motivations in the FWD. Paper 74, 2–4.

We do not agree with Patent Owner's assertions. The prior FWD focused primarily on whether the 2006 904 Operating Manual and the 2010 904 Operating Manual could be considered "printed publications" under § 311(b), and the construction of the "disposed over" and "stop gate" limitations and whether they were disclosed in the prior art combinations. *See* FWD §§ III-V. Petitioner's motivations to combine the 2006 904

Operating Manual and 2010 904 Operating Manual with Lindee were, at most, ancillary to these issues.

Furthermore, since the Federal Circuit acknowledged that Petitioner's obviousness assertions were based on the combination of the 2006 904 Operating Manual with Lindee, and the 2010 904 Operating Manual with Lindee, and the Federal Circuit held that the "asserted prior art" discloses the "disposed over" limitation, it may be, as Petitioner seems to argue, that the Federal Circuit's decision carries with it the determination that there was a motivation to use Lindee's timing belt conveyor in the 2006 904 Operating Manual's food slicer to drive the product holder and its grippers. Paper 75, 1 (Petitioner's Brief on Remand); *Weber*, 92 F.4th at 1065, 1069–1070. For completeness, however, we provide below our analysis determining that Petitioner has provided the necessary motivation to combine Lindee's timing belt driven grippers with the 2006 904 Operating Manual's food slicer.

In light of the Federal Circuit's decision, we agree with Petitioner that the structure and function of the 2006 904 Operating Manual's product holder and Lindee's grippers are similar in that they serve to grip food product and guide it to the slicing station. *See, e.g.*, Ex. 1005, 23; Ex. 1006, 18:20–35, Fig. 7A. The two devices differ in their actuation—the 2006 904 Operating Manual uses a ball screw spindle actuator to drive the product holder along the feed path, whereas Lindee uses a timing belt 334 to drive its grippers 151 along the feed path. Ex. 1005, 273–274; Ex. 1006, 18:33–34, Fig. 7A. However, Petitioner presented evidence that "unlike ball screws, belt drives do not require periodic lubrication with grease or exhibit backlash when they change direction." Ex. 1003 ¶ 137. In addition, Petitioner demonstrates that a POSA at the time would have understood that conveyor

belts like Lindee's can be easily cleaned. Ex. 1051 ¶¶ 50–54. Petitioner further asserted that conveyor belts are easy to maintain at low cost. *Id.* citing ¶¶ 55–58.

We agree with Petitioner that, at least for some scenarios, including those that Petitioner specifies, a POSA would have seen that there were advantages to using Lindee's timing belt rather than the 2006 904 Operating Manual's ball-screw to drive food article grippers. Petitioner has demonstrated a POSA would have been motivated to combine Lindee's belt-driven grippers in the 2006 904 Operating Manual's food slicer notwithstanding Patent Owner's arguments to the contrary.

i) Reasonable Expectation of Success

Petitioner asserts that a POSA would have had a reasonable expectation of success modifying the 2006 904 Operating Manual's slicer to include Lindee's conveyor belt system for multiple reasons. Pet. 47–48 (citing Ex. 1003 ¶ 138). First, Petitioner contends that Lindee's conveyor belt system serves the same purpose (linear actuation of the food gripper) in a structurally similar device (food slicer) as the conveyor belt of the 904 slicer disclosed in the 2006 904 Operating Manual. *Id.* at 47 (citing Ex. 1003 ¶ 139). Second, Petitioner asserts that the 2006 904 Operating Manual's "food gripper (i.e., the product holder) is actuated using a linear actuator that is built into the structure of the upper portion of the 904 slicer, which has both the structure and space for a POSA to implement the conveyor belt actuation system." *Id.* (citing Ex. 1005, Fig. 12; Ex. 1003 ¶ 139). Third, Petitioner contends that "designing and implementing a straightforward, predictable mechanical system like Lindee's conveyor belt actuation was well within the skills of a POSA in the relevant time period." *Id.* at 47–48 (citing Ex. 1003 ¶ 140). Petitioner asserts that "a POSA would

have had a reasonable expectation of success adding Lindee's conveyor system to the 2006 904 manual's slicer." *Id.* at 48 (citing Ex. 1003 ¶ 140).

Patent Owner argues that "[a] POSA would not expect any benefits from" "flipping Lindee's timing belt upside down" and that it would be "easier to fit the timing belt into the machine" and "more hygienic." Resp. 53 (citing Ex. 2019 ¶¶ 117–119). Patent Owner further argues that "[t]he Petition does not address why a POSA would expect success in changing the basic operation and function of the 904 slicer by including multiple timing belts and independently-driven food grippers." Paper 74, 5 (citing Pet. 47–48).

We do not agree with Patent Owner's assertions. Petitioner provided evidence that conveyor belts such as Lindee's timing belts were interchangeable with ball screw drives, that the 904 slicer has space to fit Lindee's timing belts in its upper portion, and that a POSA had the skill and ability to make the substitution. Pet. 47–48 (citing Ex. 1003 ¶¶ 138–140; Ex. 1005, Fig. 12). Patent Owner's argument is unavailing.

We determine that Petitioner has shown that a POSA would have had a reasonable expectation of success in combining Lindee's conveyor belt with the 904 slicer disclosed in the 2006 904 Operating Manual for the reasons that Petitioner presents.

j) Conclusion for Claim 1

Petitioner has shown that a POSA would have been motivated to combine the 2006 904 Operating Manual and Lindee with a reasonable expectation of success in making the combination, and that each limitation of claim 1 is disclosed by the combination notwithstanding Patent Owner's arguments to the contrary. Accordingly, we determine that Petitioner has shown by a preponderance of the evidence that claim 1 is unpatentable

because it would have been obvious over the combination of the 2006 904 Operating Manual and Lindee.

2. Claim 9

We now address Petitioner's contentions that claim 9 of the '436 patent would have been obvious over the combination of the 2006 904 Operating Manual and Lindee, and Patent Owner's arguments against Petitioner's contentions in light of the Federal Circuit's decision. Pet. 59–67; Resp. 36–52. We determine that claim 9 would have been obvious over the combination for the reasons that follow.

a) Preamble 9.p: Slicing Machine

The preamble of claim 9 recites "A food article slicing machine, comprising:"

Petitioner asserts that both the 2006 904 Operating Manual and Lindee disclose preamble 9.p for the reasons stated for claim 1. Pet. 59 (citing *id.* at § VI.A.1; Ex. 1003 ¶ 143).

Patent Owner does not dispute Petitioner's contention.

We agree with Petitioner and find that the 2006 904 Operating Manual and Lindee each disclose preamble 9p. Thus, we need not and do not decide whether the preamble is limiting.

b) Limitation 9.1: Slicing Station

Limitation 9.1 recites "a slicing station comprising a knife blade and a knife blade drive driving the blade along a cutting path in a cutting plane."

Petitioner contends that the 2006 904 Operating Manual discloses a slicing station with a "blade" for slicing food articles. Pet. 59 (citing *id.* at § VI.A.4; Ex. 1005, 11, Fig. 2; Ex. 1003 ¶ 145). Petitioner asserts that the 2006 904 Operating Manual's "knife blade is a flat, partially disc-shaped that is intended to rotate about a central axis." *Id.* (citing Ex. 1005, 207–

212; Figs. 294, 299). Petitioner argues that a POSA would have understood that the blade requires a drive of some type to rotate it. *Id.* (citing Ex. 1005, 287; Ex. 1003 ¶¶ 146–147).

Petitioner reproduces Figure 299 of the 2006 904 Operating Manual, as shown below.

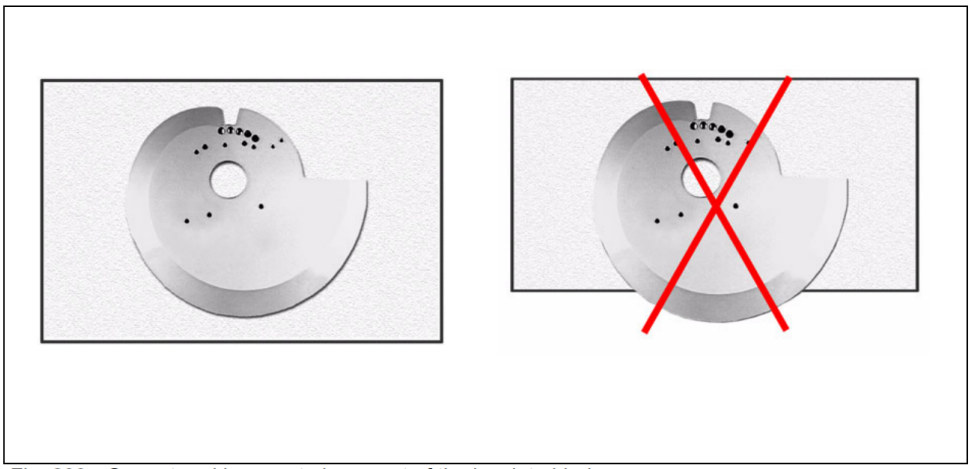

Fig. 299 Correct and incorrect placement of the involute blade

In relation to Figure 299, Petitioner states that "[t]he thin, disc type shape of the knife blade combined with how it is rotated . . . means that the blade is rotated (i.e., "driven" as claimed) along a cutting path in a plane." *Id.* at 59–60 (citing Ex. 1005, Fig. 299).

Petitioner asserts that "Lindee also discloses the claimed slicing station" for the reasons discussed for claim 1. Pet. 60 (citing *id.* at § VI.A.4; Ex. 1006, 7:51–64; Ex. 1003 ¶¶ 149–150). Specifically, Petitioner asserts that Lindee discloses "a knife blade drive driving the knife blade along a predetermined cutting path." *Id.* (citing Ex. 1006, 2:15–16).

Petitioner thus alleges that the 2006 904 Operating Manual and Lindee each disclose limitation 9.1.

Patent Owner does not dispute Petitioner's contentions.

We agree with Petitioner and find that the 2006 904 Operating Manual and Lindee each disclose the slicing station claimed in limitation

9.1. *See also* § V.B.1.d, *supra*, discussing the "slicing station" of claim 1's limitation 1.3.

c) Limitation 9.2: Loading Apparatus

Limitation 9.2 recites "a food article loading apparatus including a lift tray assembly moveable between a staging position and an elevated position, the elevated position being a position where food articles disposed within the lift tray assembly are in a food article feed path."

Petitioner contends that limitation 9.2 is similar to limitation 1.1 which was previously discussed. Pet. 60 (citing Ex. 1003 ¶ 153). However, Petitioner asserts that limitation 9.2 "differs in substance by specifying that the elevated position of the lift tray is 'a position where food articles disposed within the lift tray assembly are in a food article feed path.'" *Id.* at 60–61 (citing Ex. 1003 ¶ 153). Petitioner argues that, as discussed for limitation 1.1, "the product conveyor belt (i.e., the claimed "lift tray") moves to an elevated position to place food articles in the feed path for slicing." Pet. 61 (citing *id.* at § VI.A.2; Ex. 1003 ¶ 153). Petitioner thus alleges that "in the 904 slicer, the food articles disposed on the product conveyor belt are in the feed path when the product conveyor belt is lifted into the 'infeed position,' which is the term the 2006 904 [Operating Manual] uses for the elevated product conveyor position.'" *Id.* (citing Ex. 1005, 40). Petitioner contends that the remaining analysis provided for claim 1's limitation 1.1 also applies to limitation 9.2. Pet. 61 (citing *id.* at § VI.A.2; Ex. 1003 ¶ 153). Accordingly, Petitioner asserts that the 2006 904 Operating Manual discloses limitation 9.2. *Id.* (citing Ex. 1003 ¶ 155).

Patent Owner does not dispute Petitioner's contentions for this limitation.

After reviewing Petitioner's contentions, we find that limitation 9.2 is disclosed by the 2006 904 Operating Manual.

d) Limitation 9.3: Feed Apparatus

Limitation 9.3 recites "a food article feed apparatus disposed over said food article loading apparatus and having a conveyor assembly with independently driven endless conveyor belts."

As explained in § III and § V.B.1.c, the Federal Circuit held that "disposed over" limitation "requires only that the feed apparatus be generally positioned above the loading apparatus." *Weber*, 92 F.4th at 1070. The Federal Circuit further held that the "disposed over" aspect of limitation 9.3 is disclosed by Petitioner's asserted prior art under its claim construction and Patent Owner's acquiescence that the prior art satisfies the limitation under that construction. *Weber*, 92 F.4th at 1069–1070.

We thus consider Petitioner's contentions for the remaining part of limitation 9.3, which recites that the "food article feed apparatus . . . [has] a conveyor assembly with independently driven endless conveyor belts."

Petitioner contends that it would have been obvious to use Lindee's conveyor belt to drive the 2006 904 Operating Manual's product holder (i.e., food gripper) in its food article feed apparatus. Pet. 61 (citing *id.* at §§ VI.A.3, VI.A.8; Ex. 1003 ¶ 158). Petitioner asserts that the modified 904 slicer would have the claimed "conveyor assembly." *Id.*

Petitioner further contends that Lindee discloses the claimed "independently driven endless conveyor belts." Pet. 62. Specifically, Petitioner asserts that Lindee "discloses using two or more independently driven gripping mechanisms." *Id.* (citing Ex. 1006, 8:53–59, 9:23–32, 18:9–17; Ex. 1003 ¶ 159). According to Petitioner, "[e]ach of Lindee's grippers has a corresponding servo motor that independently powers the

movement of the gripper along the feed path." *Id.* (citing Ex. 1006, 8:53–59, 9:23–32, 18:9–17; Ex. 1003 ¶ 159). Petitioner asserts that "Lindee explains that this allows the feed rate of each gripper (and corresponding food product gripped by the gripper) to be different 'to adjust slice thickness for one loaf independently of the other.'" *Id.* (citing Ex. 1006, 9:18–22; Ex. 1003 ¶ 159). Patent Owner agrees that Lindee discloses independently driven grippers. Resp. 33 (citing Ex. 1006, 2:21–30; Ex. 2019 ¶ 96).

Patent Owner provides no arguments specific to the part of limitation 9.3 reciting that the food article feed apparatus . . . [has] a conveyor assembly with independently driven endless conveyor belts."

Accordingly, in light of the Federal Circuit's determination that the "disposed over" limitation is disclosed by Petitioner's asserted prior art, and considering Petitioner's contentions for the remaining part of limitation 9.3, we find that Petitioner has shown that the combination of the 2006 904 Operating Manual and Lindee discloses limitation 9.3 of claim 9.

e) Limitation 9.4: Conveyor Belts Cooperating with Grippers

Limitation 9.4 recites "wherein each of the conveyor belts is used in cooperation with an independently driven and controlled food article gripper for moving a food article along the food article feed path."

Petitioner contends that "the independently driven conveyor belts in the modified 904 slicer are each used to drive on of the three product holders (i.e., food grippers) of the 904 slicer along the feed path." Pet. 64 (citing *id.* at § VI.I.4; Ex. 1003 ¶ 162). According to Petitioner, this satisfies the part of limitation 9.4 requiring that "each of the conveyor belts is used in cooperation with an independently driven and controlled food article gripper." *Id.* (citing Ex. 1003 ¶ 162).

Petitioner further asserts that the 2006 904 Operating Manual's product holders are a type of "food article gripper" as claimed, and that "the product holders are configured to move food articles along the article feed path." Pet. 64 (citing *id.* at § VI.A.3; Ex. 1003 ¶ 162).

Petitioner thus asserts that the combination of the 2006 904 Operating Manual and Lindee discloses limitation 9.4. *Id.* (citing Ex. 1003 ¶ 163).

Patent Owner does not dispute Petitioner's contentions for limitation 9.4.

We determine that Petitioner has shown that the combination of the 2006 904 Operating Manual and Lindee discloses limitation 9.4 for the reasons Petitioner mentions.

f) Limitation 9.5: Upper Conveyor Assembly

Limitation 9.5 recites "wherein the conveyor assembly is an upper conveyor assembly."

Petitioner contends that limitation 9.5 is identical to portions of claim 1's limitation 1.2. Pet. 65 (citing Ex. 1003 ¶ 164). Petitioner contends that the analysis for limitation 1.2 applies equally to limitation 9.5 and the combination of the 2006 904 Operating Manual and Lindee discloses limitation 9.5. Pet. 65 (citing *id.* at § VI.A.3; Ex. 1003 ¶ 165).

Patent Owner does not dispute Petitioner's contentions concerning limitation 9.5.

We find that Petitioner has shown that the combination of the 2006 904 Operating Manual and Lindee discloses limitation 9.5 for the reasons that Petitioner provides.

g) Limitation 9.6: Stop Gate

Limitation 9.6 recites "a food article stop gate disposed upstream of the slicing station that forms a portion of the food article feed path."

Petitioner contends that limitation 9.6 is identical to limitation 1.4 so the same analysis applies, and the combination of the 2006 904 Operating Manual and Lindee discloses limitation 9.6. Pet. 65 (citing *id.* at § VI.A.5; Ex. 1003 ¶¶ 166–167).

Patent Owner does not dispute Petitioner's contentions concerning limitation 9.6.

We find that Petitioner has shown that the combination of the 2006 904 Operating Manual discloses limitation 9.6 for the reasons that Petitioner states. *See also* § V.B.1.e, *supra*, discussing identical limitation 1.4.

h) Limitation 9.7: Support by Stop Gate When Lift Tray Assembly Is Moved When in Elevated Position

Limitation 9.7 recites "wherein the food articles are supported in position along the food article feed path by at least the food article stop gate when the lift tray assembly is moved when in its elevated position, the food articles passing over the food article stop gate when the food articles move along the food article feed path."

Petitioner contends that the first part of limitation 9.7 (i.e., the part before the comma, which Petitioner refers to as "Element [9.7a]") is identical to limitation 1.5. Pet. 65 (citing Ex. 1003 ¶ 169). Petitioner contends that the analysis for limitation 1.5 applies equally to limitation 9.7, and that the combination of the 2006 904 Operating Manual and Lindee discloses the first part of limitation 9.7. *Id.*

Patent Owner argued during the trial that the combination of 2006 904 Operating Manual and Lindee does not disclose limitation 9.7. Resp. 49–52. The Federal Circuit held, however, that the evidence adduced at trial, including Figures 10 and 227 of the 2006 904 Operating Manual, and Weber's expert's testimony, established that the first part of limitation 9.7 is

disclosed by the 2006 904 Operating Manual. *Weber*, 92 F.4th at 1070–1072.

For the second part of limitation 9.7 (i.e., the part following the comma, which Petitioner refers to as "Element [9.7b]"), Petitioner contends that "the product bed conveyor of the 904 slicer supports the passage of the food articles by forming part of the floor of the feed path." Pet. 65 (citing *id.* at § VI.A.6; Ex. 1003 ¶ 169). Petitioner notes that the 2006 904 Operating Manual states that "the product bed conveyor 'supports the transport of the [food] product up to the shear bar." *Id.* at 65–66 (citing Ex. 1005, 15). Petitioner states that "[f]ood products pass over the product bed conveyor as they are guided along the feed path to the slicing area because the product bed conveyor is part of the floor of the feed path." *Id.* at 66 (citing Ex. 1005, 170 (Fig. 227)). Accordingly, Petitioner asserts, the combination of the 2006 904 Operating Manual and Lindee discloses the second part of limitation 9.7. *Id.* (citing Ex. 1003 ¶ 170).

Patent Owner does not dispute Petitioner's contentions for the second part of limitation 9.7.

To summarize, the Federal Circuit determined that the 2006 904 Operating Manual discloses the "disposed over" limitation in the first part of limitation 9.7. Petitioner has shown through its contentions that the second part of limitation 9.7 is disclosed by the combination of the 2006 904 Operating Manual and Lindee. Accordingly, in light of the Federal Circuit's decision and Petitioner's contentions, we find that Petitioner has shown that limitation 9.7 is disclosed by the combination of the 2006 904 Operating Manual and Lindee.

i) Limitation 9.8: Stop Gate Serves as Door

Limitation 9.8 recites "wherein the food article stop gate also serves as a door for the removal of food article end portions."

Petitioner contends that limitation 9.8 is similar to limitation 1.6. Pet. 66 (citing *id.* at § VI.A.7; Ex. 1003 ¶ 172). Petitioner asserts that "the product bed conveyor pivots to allow end bits to drop down for removal." *Id.* (citing Ex. 1005, 40; Ex. 1003 ¶ 172). Petitioner argues that "[a] POSA would have understood that the product bed conveyor pivoting open (as shown in Figure 29) to allow the end bits to drop discloses the claimed functionality of 'serv[ing] as a door' because, like a door, the product bed conveyor is pivoting to allow access through an opening.'" *Id.* (citing Ex. 1003 ¶ 172). Petitioner asserts that, accordingly, the combination of the 2006 904 Operating Manual and Lindee discloses limitation 9.8.

Patent Owner does not dispute Petitioner's contentions concerning limitation 9.8.

We find that Petitioner has shown that the combination of the 2006 904 Operating Manual and Lindee discloses limitation 9.8 for the reasons Petitioner provides.

j) Motivation to Combine

Petitioner contends that the "[t]he 904 slicer has three product holders that are capable of gripping three different food product loaves." Pet. 62 (citing Ex. 1005, 40, 45). Petitioner provides the following illustration from the 2006 904 Operating Manual to explain its contentions.

Danger point	
Gripper spikes of the product holder	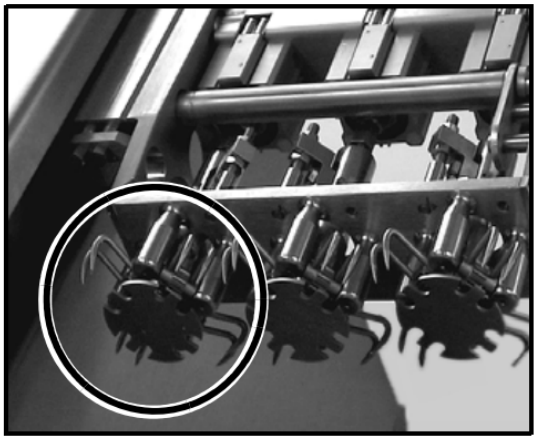

Pet. 62; Ex. 1005, 47. In relation to the illustration above, Petitioner contends that the "grippers are connected together in one support structure such that they move together when advancing the food products." Pet. 62–63.

Petitioner asserts that "[a] POSA would have been motivated to modify the 904 slicer's product holders (i.e., grippers) to make them independently driven to allow for different feed rates for each of the grippers" and that Lindee discloses that "this provides the advantage of allowing for different slice thickness when slicing multiple food products." *Id.* at 63 (citing Ex. 1006, 9:18–22; Ex. 1003 ¶ 174). Petitioner argues that "[a] POSA would have also understood that independent feed rates (and, thus, slice thickness) provides multiple advantages, such as allowing different foods to be sliced at the same time and allowing for varying slice thickness." *Id.* (citing Ex. 1003 ¶ 174). According to Petitioner, such a modification would have been the use of a known technique (Lindee's independently driven grippers) to improve a similar device (the 904 slicer's grippers)." *Id.* (citing *KSR*, 550 U.S. at 417; Ex. 1003 ¶ 174).

Patent Owner presents the same arguments against Petitioner's motivation to combine for both claim 1 and claim 9 (*see* Resp. 36–52), which we discussed for claim 1 in § V.B.1.h and found unavailing. For the same reasons, we find Patent Owner's arguments unavailing with respect to claim 9.

In addition, we agree with Petitioner that a POSA would have been motivated according to Lindee's teachings to independently drive product holders to provide different feed rates and slice thicknesses for food products in different lanes of the food slicer. Pet. 62–63 (citing Ex. 1003 ¶ 174).

We determine that Petitioner has shown that a POSA would have been motivated to combine the 2006 904 Operating Manual and Lindee.

k) Reasonable Expectation of Success

Petitioner contends that "[a] POSA would have had a reasonable expectation of success making this modification because it is a simple duplication of the conveyor belt drive system that is detailed in Lindee for each of the three existing grippers in the 904 slicer." Pet. 64 (citing Ex. 1003 ¶ 175). Petitioner argues that "[t]his type of mechanical duplication and modification (if required) would have been well within the skill of a POSA." *Id.*

We agree with Petitioner's contention. Lindee already discloses independent feed drives, and the 2006 904 Operating Manual's shows that its product holders are positioned above the feed paths. *See, e.g.*, Ex. 1006, code (57), 2:26–30. Accordingly, we agree with Petitioner that making the combination would have been straightforward given the implementation details disclosed in the 2006 904 Operating Manual and Lindee.

We addressed Patent Owner's arguments against Petitioner's stated reasons why a POSA would have had a reasonable expectation of success in

making the combination of the 2006 904 Operating Manual and Lindee in § V.B.1.i, *supra*, and found them unavailing.

We determine that Petitioner has shown that a POSA would have had a reasonable expectation of success in combining Lindee's timing belts with the 2006 904 Operating Manual's slicer to separately drive the grippers at different feed rates.

l) Conclusion for Claim 9

In light of the Federal Circuit's decision, Petitioner has shown by a preponderance of the evidence that a POSA would have been motivated to combine the 2006 904 Operating Manual with Lindee with a reasonable expectation of success, and that each element of claim 9 is disclosed by the combination of the 2006 904 Operating Manual and Lindee, notwithstanding Patent Owner's arguments to the contrary. Accordingly, we determine that Petitioner has demonstrated by a preponderance of the evidence that claim 9 is unpatentable because it would have been obvious over the combination of the 2006 904 Operating Manual and Lindee.

3. Claims 2 and 10

Claim 2 depends from claim 1 and recites "wherein movement of the conveyor belt is coordinated with movement of the food article gripper."

Petitioner contends that, in the proposed combination, the grippers of the 2006 904 Operating Manual are mechanically connected to Lindee's conveyor belt, and thus necessarily, movement of the conveyor belt is coordinated with movement of the gripper. Pet. 48–49 (citing Ex. 1006, 18:18–21, 18:33–34; Ex. 1003 ¶¶ 179–181). Accordingly, Petitioner contends that the combination of the 2006 904 Operating Manual and Lindee renders claim 2 obvious. *Id.* at 49 (citing Ex. 1003 ¶ 181).

Claim 10 depends from claim 9 and recites "wherein movement of each of the conveyor belts is coordinated with movement of the food article gripper."

Petitioner contends that claim 10 is similar to claim 2, differing only by reciting that 'each' of the conveyor belts is coordinated, and asserts that this difference and the differences between claim 1 and claim 9 do not affect the analysis that Petitioner applied for claim 2. Pet. 67–68 (citing *id.* at § VI.B; Ex. 1003 ¶¶ 178–180). Accordingly, Petitioner contends that "the combination of the 2006 904[Operating Manual] and Lindee renders claim 10 obvious." *Id.* at 68 (citing Ex. 1003 ¶ 181).

Patent Owner does not provide any arguments specific to claim 2 or claim 10.

We determine that Petitioner has shown by a preponderance of the evidence that claim 2 and claim 10 would have been obvious over the combination of the 2006 904 Operating Manual and Lindee for the reasons Petitioner provides.

4. Claims 3 and 11

Claim 3 depends from claim 1 and recites "wherein the conveyor belt is used in cooperation with the food article gripper for moving the food articles along the food article feed path when the gripper seizes a food article."

Petitioner asserts that "Lindee's conveyor belt is 'used in cooperation with the food article gripper for moving the food articles along the food article feed path' as claimed because the conveyor belt is the actuator that is connected to and moves the food gripper along the feed path." Pet. 50 (citing Ex. 1003 ¶ 184). According to Petitioner, "[t]his cooperative movement occurs after the gripper has gripped or seized the food article

because, as disclosed in the 2006 904 [Operating Manual], '[t]he product holder (i.e., gripper) moves up against the product ends and grips them' and then '[t]he products are fed to the blade' for slicing." *Id.* (citing Ex. 1005, 40; Ex. 1003 ¶ 184). Petitioner argues that "[t]he product holder (i.e., gripper) moves down the feed path during the slicing process and therefore the conveyor belt is working in cooperation with the gripper to move the food articles after the gripper has gripped the food." *Id.* (citing Ex. 1003 ¶¶ 185–186). Accordingly, Petitioner asserts, "the combination of the 2006 904 manual and Lindee renders claim 3 obvious." *Id.* (citing Ex. 1003 ¶ 187).

Claim 11 depends from claim 9 and recites "wherein each of the conveyor belts is used in cooperation with the food article gripper for moving the food articles along the food article feed path when the gripper is in a closed position in which the gripper seizes a food article."

Petitioner asserts that "[c]laim 11 is similar to claim 3, differing only by reciting that 'each of the conveyor belts' is used in cooperation with the food article gripper." Pet. 68 (citing *id.* at § VI.C; Ex. 1003 ¶ 183). According to Petitioner, "[t]his difference does not affect the analysis of claim 10 because each conveyor belt in claim 10 is mechanically connected to its corresponding product gripper." *Id.* (citing Ex. 1003 ¶¶ 184–186). Petitioner further asserts that the differences between claim 1 and claim 9 do not affect its analysis claim 1, which applies as well to claim 9. Pet. 68 (citing *id.* at § VI.C; Ex. 1003 ¶ 186). Accordingly, Petitioner asserts that "the combination of the 2006 904 manual and Lindee renders claim 11 obvious." *Id.* (citing Ex. 1003 ¶ 187).

Patent Owner does not provide any arguments specific to claim 3 or claim 11.

We determine that Petitioner has shown by a preponderance of the evidence that claim 3 and claim 11 would have been obvious over the combination of the 2006 904 Operating Manual and Lindee.

5. Claims 4 and 12

Claim 4 depends from claim 1 and recites "wherein the food article gripper is driven and controlled when the gripper seizes a food article."

Petitioner contends that the 2006 904 Operating Manual "discloses that '[t]he product holder (i.e., gripper) moves up against the product ends and grips them' and then '[t]he products are fed to the blade' for slicing." Pet. 50–51 (citing *id.* at § VI.C; Ex. 1005, 40; Ex. 1003 ¶¶ 190–191). According to Petitioner, "[t]he product holder can only move by being driven by the conveyor belt, which is in in turn controlled by the slicer." *Id.* at 51. Accordingly, Petitioner asserts that the combination of the 2006 904 Operating Manual and Lindee renders claim 4 obvious. *Id.* (citing Ex. 1003 ¶ 192).

Claim 12 depends from claim 9 and recites "wherein the food article gripper is independently driven and controlled when the gripper is in a closed position in which the gripper seizes a food article."

Petitioner contends that "[c]laim 12 is similar to claim 4, differing only by reciting that the grippers are 'independently' driven and controlled when the gripper is in a 'closed position in which the gripper seizes a food article.'" Pet. 69 (citing *id.* at § VI.D; Ex. 1003 ¶ 189). Petitioner asserts that "the food grippers in the 904 slicer as modified by Lindee are each independently controlled." *Id.* at § VI.I.4. Furthermore, Petitioner contends, "a POSA would have understood that when a gripper grips the food product as disclosed in the 2006 904 manual, it does so in the 'closed' position as claimed because grippers like those disclosed by the 2006 904

[Operating Manual] cannot grip when in the open position." *Id.* (citing Ex. 1005, 40, 47; Ex. 1003 ¶ 190).

Petitioner states that all remaining elements of claim 12 are identical to claim 4 and the differences between claim 1 and claim 9 do not affect that the analysis for claim 4 applies to claim 9. Pet. 69 (citing *id.* at § VI.D; Ex. 1003 ¶¶ 190–191). Accordingly, Petitioner contends that the combination of the 2006 904 Operating Manual and Lindee renders claim 12 obvious. *Id.* (citing Ex. 1003 ¶ 192).

Patent Owner does not present any arguments specific to claim 4 or claim 12.

We determine that Petitioner has shown by a preponderance of the evidence that claim 4 and claim 12 would have been obvious over the combination of the 2006 904 Operating Manual and Lindee.

6. Claims 5 and 13

Claim 5 depends from claim 1 and recites "wherein the conveyor belt is mechanically connected to the food article gripper."

Petitioner contends that "in the 904 slicer as modified with the conveyor belt gripper drive of Lindee, the gripper is mechanically connected to the conveyor belt by carriage 125." Pet. 51 (citing *id.* at § VI.A.3; Ex. 1006, 18:33–34). Thus, Petitioner asserts, "in the modified 904 manual slicer, the food gripper is mechanically connected to the conveyor belt (i.e., [Lindee's] timing belt 334)." *Id.* (citing Ex. 1003 ¶ 195). Accordingly, Petitioner asserts that "the combination of the 2006 904 [Operating Manual] and Lindee renders claim 5 obvious." *Id.* at 51–52 (citing Ex. 1003 ¶¶ 195–197).

Claim 13 depends from claim 9 and recites "wherein at least one of the conveyor belts is mechanically connected to the food article gripper."

Petitioner contends that claim 13 is similar to claim 5, "differing only by specifying that 'at least one' of the conveyor belts is mechanically connected to the gripper." Pet. 69–70 (citing *id.* at § VI.E; Ex. 1003 ¶ 194). Petitioner asserts that "[s]ince all of the independently driven conveyor belts of the modified 904 slicer are mechanically connected to their corresponding grippers, the analysis of claim 5 applies equally here" and the differences between claim 1 and claim 9 do not affect the features of claim 5 and claim 13. *Id.* at 70 (citing Ex. 1003 ¶¶ 194, 197). Accordingly, Petitioner asserts, "the combination of the 2006 904 [Operating Manual] and Lindee renders claim 13 obvious." *Id.* (citing Ex. 1003 ¶ 197).

Patent Owner does not provide any arguments specific to claim 5 or claim 13.

After reviewing the arguments and evidence, we determine that Petitioner has shown by a preponderance of the evidence the claim 5 and claim 13 would have been obvious over the combination of the 2006 904 Operating Manual and Lindee.

7. Claims 6 and 14

Claim 6 depends from claim 1 and recites "wherein the food article gripper is mounted to a bottom run of the conveyor belt."

Petitioner contends that "a POSA would have found it obvious to use Lindee's conveyor belt to drive the 2006 904[Operating Manual's] product holder (i.e., food gripper)." Pet. 52 (citing Ex. 1003 ¶ 200). Petitioner asserts that "[a] POSA would have been motivated to mount Lindee's conveyor belt in the upper portion of the 904 slicer because that is where the product holder is mounted and where track that the product holder runs on is located." Pet. 52 (citing *id.* at § VI.A.3; Ex. 1005, Fig. 12; Ex. 1003 ¶¶ 201–202. Petitioner asserts that "the most logical way to connect the

product holder to the conveyor belt drive is to invert the mounting arrangement shown in Figure 7A of Lindee and mechanically connect the product holder to the bottom of the conveyor belt." *Id.* (citing Ex. 1003 ¶¶ 201–202).

Petitioner contends that "[t]his mounting scheme minimizes the amount of structural modification that is needed when implementing the conveyor belt drive system in the 904 slicer because, as shown in Figure 12 [of the 2006 904 Operating Manual], the product holder already hangs below its mounting track and the surrounding structure of the slicer, and thus is better suited to mounting on the bottom of the conveyor belt." Pet. 53 (citing Ex. 1003 ¶ 200). Petitioner further asserts "[m]ounting the gripper to the bottom of the conveyor in the modified 904 slicer also allows the supporting structure (including the drive elements) to be located above the gripper and thus out of the feed path, which reduces interference between the supporting structure and the feed path." *Id.* (citing Ex. 1003 ¶ 200).

Petitioner further alleges that "a POSA would also have been motivated to mount the product holder to the bottom run of the conveyor belt because there are a finite number of ways to mount the product holder to the conveyor belt." Pet. 54 (citing Ex. 1003 ¶ 201; *KSR*, 550 U.S. at 416). Petitioner argues that "there are only two mechanically appropriate options for a conveyor belt drive as used in Lindee: mounting to the top run of the conveyor belt or to the bottom run of the conveyor belt." *Id.* (citing Ex. 1003 ¶ 201). According to Petitioner, "[m]ounting the gripper elsewhere on the belt would interfere with the operation of the drive and idler sprockets." *Id.* Thus, Petitioner asserts, "it would have also been obvious to try mounting the product holder to the bottom run of the conveyor belt." *Id.*

Petitioner further asserts that "[a] POSA would have had a reasonable expectation of success attaching the product holder to the bottom run of the conveyor belt because this connection is a simple inversion of the mechanical connection detailed in Lindee." Pet. 55 (citing Ex. 1003 ¶ 203). Petitioner argues that "[n]o significant redesign of the structural connections would be required" and "[m]odifying the connection in this way would have been a simple mechanical redesign that was well within the skills of a POSA." *Id.* (citing Ex. 1003 ¶ 203).

Patent Owner argues that, contrary to Petitioner's assertion, "[i]t would not have been 'most logical' to invert Lindee's mounting arrangement when connecting the 904 Manuals' product holder to Lindee's timing belt in Weber's proposed combination." Resp. 53. Patent Owner asserts that "[a] POSA would recognize major obstacles, such as contamination of the food product, to flipping Lindee's timing belt upside down" and "would not expect any benefits from doing so." *Id.* (citing Ex. 2019 ¶ 117). According to Patent Owner, "a POSA would recognize several reasons to mount the product holders to the top run of Lindee's timing belt, (as disclosed in Lindee itself) such as it being easier to fit the timing belt into the machine, and the resulting system being more hygienic." *Id.* (citing Ex. 2019 ¶¶ 118–119.) Petitioner argues that Petitioner's "argument is based entirely on hindsight reasoning." *Id.*

For reasons already explained, we agree with Petitioner that the evidence does not support that a conveyor belt, such as Lindee's timing belt, would necessarily cause food contamination when positioned above the food article feed path. Reply 30 (citing *id.* at § IV; Pet. 53). Instead, the evidence shows that certain conveyor belts were known as safe in the food industry. Ex. 1051 ¶¶ 50–54, 62 (citing Ex. 1056 ¶ 5; Ex. 1062, 105:1–10; Ex. 1005,

239–249; Ex. 1009, 202–225; Ex. 1054, 1:17–18, 1:21–24, 1:56–60; Ex. 1003 ¶ 137). For example, the evidence shows that some conveyor belts were made with hygienic materials, such as thermoplastics or stainless steel, with smooth, non-absorbing surfaces that could be easily cleaned. Ex. 1054, 1:21–24, 1:56–60. Ex. 1056 ¶ 5. In addition, Petitioner's and Patent Owner's experts testified that some conveyor belts do not require external lubrication, and thus do not cause food contamination from lubricant. *See, e.g.*, Ex. 1051 ¶¶ 50, 52; Ex. 1062, 129:21–25.

Moreover, we agree with Petitioner that the 2006 904 Operating Manual already disclosed overhead conveyor belts (i.e., upper product guide conveyor system), so a POSA would have understood that Lindee's conveyor belts could similarly be positioned above the food article feed path where there is available space to put them. Reply 11–14, 30 (citing *id.* at § IV); Ex. 1051 ¶ 53; Ex. 1062, 109:8–20; Ex. 1003 ¶ 137. We further agree with Petitioner that "the most logical way to connect the gripper to the belt drive is to implement Lindee's mounting arrangement on the belt's bottom run." Reply 30 (citing Pet. 53). Inverting Lindee's belt drive system would result in this feature and "minimize[] the amount of structural modification needed" and "allow[] the supporting structure (including drive elements) to be located above the gripper and thus out of the feed path." *Id.* (citing Ex. 1051 ¶ 108).

Furthermore, Petitioner's and Patent Owner's experts agree that there are only two possible mounting solutions for the product holder—either the top run or the bottom run of the conveyor belt. Ex. 1051 ¶ 108; Ex. 1062, 130:23–131:2; Pet. 54. Petitioner indicated that there was a need in the food industry to provide different feed rates to adjust the slice thickness of one loaf independently of the other. Pet. 46 (citing Ex. 1003 ¶ 134). For

example, the evidence shows that a POSA would have recognized that adjusting slice thickness for one loaf independently of the other allows for maintaining the appropriate weight of the final product, and permits different food product loaves such as turkey or roast beef to be sliced simultaneously in different lanes of the food slicer machine. *See, e.g.*, Ex. 1003 ¶ 134 (citing Ex. 1006, 8:53–59, 9:18–20, 9:23–32, 18:9–17). As the Supreme Court has stated: "When there is a design need or market pressure to solve a problem and there are a finite number of identified, predictable solutions, a person of ordinary skill has good reason to pursue the known options within his or her technical grasp." *KSR*, 550 U.S. at 421. Petitioner has shown that this is the case here.

Accordingly, we determine that Petitioner has shown by a preponderance of the evidence that claim 6 and claim 14 would have been obvious over the combination of the 2006 904 Operating Manual and Lindee.

8. Claims 7 and 15

Claim 7 depends from claim 1 and recites "wherein the food article gripper is clamped to a belt joint and guide assembly by a fixture."

Petitioner contends that Lindee's Figure 7A and corresponding text discloses a "[c]arriage 125 is connected to the upper run of a timing belt 334." Pet. 55 (citing Ex. 1006, 18:33–34). Petitioner asserts that "carriage 125 is a 'belt joint and guide assembly' as claimed because it is the structural element that is attached to the conveyor belt." *Id.* (citing Ex. 1003 ¶ 207).

Petitioner's contentions are better understood in relation to the enlarged version of Lindee's Figure 7B, shown below.[6]

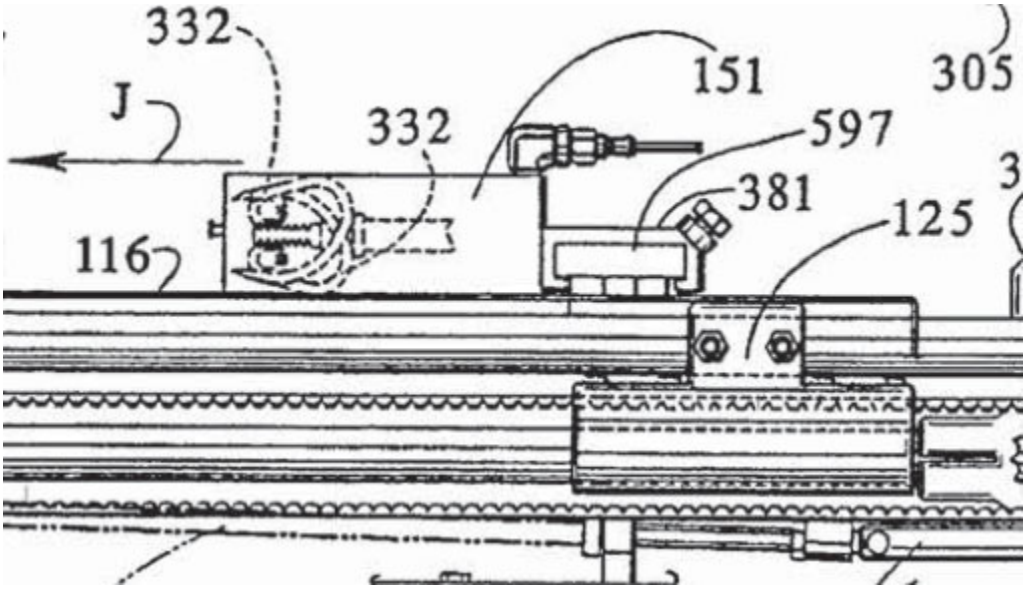

Pet. 57. In relation to Lindee's Figure 7B, Petitioner contends that "[t]he gripper 'is mounted on an extension 597 of carriage 125 by a bracket 381.'" Pet. 56 (citing Ex. 1006, 18:18–21). Petitioner asserts that the "[b]racket 381 disclose[s] the claimed 'fixture' because it is the structural element that connects the gripper to carriage 125 (i.e., the claimed "belt joint and guide assembly")." *Id.* (citing Ex. 1003 ¶ 208). According to Petitioner, "[t]he connection between bracket 381 and extension 597 is shown in the enlarged except of Figure 7A." *Id.* at 56 (citing Ex. 1003 ¶ 208). Petitioner argues that "[a] POSA would have understood, or at least found it suggested, that bracket 381 is being clamped to extension 597 of carriage 125 as

[6] The enlarged excerpt of Lindee's Figure 7B that we provide herein is similar to that in the Petition. *See* Pet. 57. However, Petitioner's version cut off the number "125" indicating the carriage, so we provide this version of Figure 7B in lieu of Petitioner's to show all of the numerals that Petitioner references in their entireties.

claimed for at least two reasons. *Id.* (citing Ex. 1003 ¶ 208). First, Petitioner contends, "there is a set screw (near numeral 381 []) that appears to be securing bracket 381 to extension 597 in a fashion that suggests bracket 318 is clamping on extension 597." *Id.* (citing Ex. 1003 ¶ 208). Second, Petitioner asserts, "bracket 381 forms a type of 'u' shape around extension 597, which further suggest[s] bracket 381 is being slid on to extension 597 and then being clamped down, likely by tightening the set screw." *Id.* at 56–57 (citing Ex. 1003 ¶ 208). Thus, according to Petitioner, "a POSA would have understood, or at least found it suggested, that bracket 381 is being clamped onto extension 597 of carriage 125 as claimed." *Id.* at 57 (citing Ex. 1003 ¶ 208).

Petitioner further argues that "[a] POSA would have been motivated to use Lindee's gripper-conveyor connection system in the modified 904 slicer at least because the POSA would have already been motivated to use Lindee['s] conveyor drive system to actuate the 904 slicer's gripper." Pet. 57 (citing *id.* at § VI.A.3). Petitioner contends that "[t]he simplest and most logical method of connecting the 904 gripper to Lindee's conveyor is duplicating Lindee's existing gripper-conveyor connection system." *Id.* (citing Ex. 1003 ¶ 209). Petitioner further asserts that "[a] POSA would have had a reasonable expectation of success using Lindee's gripper-conveyor connection system because it is a simple duplication of an existing structure that already achieves the desired results—namely, connecting the gripper to the conveyor." *Id.* at 57–58 (citing Ex. 1003 ¶ 209). Accordingly, Petitioner asserts that the combination of the 2006 904 Operating Manual and Lindee renders claim 7 obvious. *Id.* at 58 (citing Ex. 1003 ¶ 210).

Claim 15 depends from claim 9 and recites "wherein the food article gripper is clamped to a belt joint and guide assembly by a fixture."

Petitioner asserts that the "added limitation of claim 15 is identical to claim 7's" and the "differences between independent claim 1 and independent claim 9 do not affect the features of [claim 7 and claim 15], and thus the analysis above applies equally here." Pet. 70–71 (citing *id.* at § VI.G; Ex. 1003 ¶¶ 206–209). Accordingly, Petitioner asserts, "the combination of the 2006 904 [Operating Manual] and Lindee renders claim 15 obvious." *Id.* at 71 (citing Ex. 1003 ¶ 210).

Patent Owner does not present any arguments specific to claim 7 or claim 15.

Referring to Lindee's Figure 7B and related discussion, we agree with Petitioner that Lindee discloses that gripper 332 (the claimed "gripper") is clamped by a set screw ("clamped) to carriage 125 ("belt joint and guide assembly") by bracket 381 ("fixture"). The carriage 125 is a "belt joint and guide assembly" because it joins the conveyor belt and gripper, guides the gripper along the feed path, and has an extension 597 that is T-shaped in cross-section to receive and guide the U or C-shaped bracket 381 to slide to the desired position where it is clamped by tightening the set screw. Pet. 55–58, 70–71.

We determine that Petitioner has shown by a preponderance of the evidence that claim 7 and claim 15 would have been obvious over the combination of the 2006 904 Operating Manual and Lindee.

9. Claims 8 and 16

Claim 8 depends from claim 1 and recites "wherein the food article stop gate is configured to pivot."

Petitioner contends that "the product bed conveyor (i.e., the claimed "food article stop gate") moves between a stop/ejection position that is roughly perpendicular to the feed path and a supporting position that forms part of the floor of the feed path." Pet. 58 (citing *id.* at § VI.A.3; Ex. 1005, 40, Figs. 28–29; Ex. 1003 ¶ 213). Petitioner asserts, "[r]egarding this movement, the 2006 904 [Operating Manual] specifies that '[t]he product bed conveyor pivots into the ejection position.'" *Id.* (quoting Ex. 1005, 40). Thus, Petitioner contends, "the product bed conveyor pivots between its positions and is therefore configured to pivot." *Id.* (citing Ex. 1003 ¶¶ 213–214). Accordingly, Petitioner contends that the combination of the 2006 904 Operating Manual and Lindee renders claim 8 obvious. *Id.* (citing Ex. 1003 ¶ 215).

Claim 16 depends from claim 9 and recites "wherein the food article stop gate is configured to pivot."

Petitioner contends that "[c]laim 16 is identical to claim 8" and that "[t]he differences between independent claim 1 and independent claim 9 do not affect the features of" claim 8 and claim 16 such that the analysis for claim 8 applies to claim 16. Pet. 71 (citing Ex. 1003 ¶¶ 212–214). Accordingly, Petitioner argues, the combination of the 2006 904 Operating Manual and Lindee renders claim 16 obvious. *Id.* (citing Ex. 1003 ¶ 215).

Patent Owner does not provide any arguments specific to claim 8 or claim 16.

Petitioner shows that the 2006 904 Operating Manual's product bed conveyor ("food article stop gate") pivots to eject end pieces of food loaves. Pet. 58 (citing Ex. 1005, 40, Figs. 28–29), Pet. 71. Thus, we determine that Petitioner has shown by a preponderance of the evidence that claims 8 and

16 would have been obvious over the combination of the 2006 904 Operating Manual and Lindee.

C. Ground 2: Obviousness of Claims 1–16 Based on the 2010 904 Operating Manual and Lindee

Petitioner asserts that the "2010 904 Operating Manual is substantively identical to the 2006 904 Operating Manual" except that it adds detail related to the upper product guide that has separate conveyors and drives to permit the conveyors to be independently driven at different speeds. *See* Pet. 71, 77 (citing Ex. 1009, 166). Consequently, Petitioner's reliance on the 2010 904 Operating Manual in this ground is substantively the same as Petitioner's use of the 2006 904 Operating Manual in ground 1 discussed in § V.B, except with respect to motivation to combine. *See, e.g.*, *id.* at 72–74, 76–79 (referring back to ground based on the 2006 904 Operating Manual to explain how the 2010 904 Operating Manual discloses the limitations of claim 1).

As to motivation to combine, Petitioner argues that the individual upper product guide conveyors of the 2010 904 Operating Manual provide additional motivation to incorporate Lindee's independent gripper conveyor drives. *Id.* at 74–75 (citing Ex. 1006, 9:18–22; Ex. 1003 ¶ 247). We agree with Petitioner that 2010 904 Operating Manual's disclosure that the upper product conveyors can be "individually driven with different speeds" strengthens the motivation to combine Lindee's timing belts, which are similarly independently driven, to the machine slicer disclosed in the 2010 904 Operation Manual to independently drive the grippers.

Since the 2010 904 Operating Manual in ground 2 has the same disclosure that Petitioner relied on for ground 1, we determine that, for the

reasons discussed above, the Petition establishes by a preponderance of the evidence that claims 1–16 are unpatentable as obvious over the combination of the 2010 904 Operating Manual and Lindee.

VI. MOTION TO EXCLUDE

Pursuant to 37 C.F.R. §§ 42.62 and 42.64, Patent Owner moved to exclude Exhibit 1051 ¶¶ 61, 95–107; Exhibit 1060 ¶ 36; and Exhibit 1068. Paper 59, 2 (Patent Owner's Motion to Exclude).

Specifically, Patent Owner sought to exclude Exhibit 1051 ¶ 61 because it allegedly seeks "[t]o re-capture the missing 'disposed over' claim limitation" in which "Petitioner proposes a conveyor belt directly over the product holders." Paper 59, 4 (citing Reply 17–19). However, since the Federal Circuit determined that the "disposed over" limitation is disclosed by the combination of the 2006 904 Operating Manual and Lindee, we dismiss Patent Owner's motion to exclude Exhibit 1051 ¶ 61 as moot.

We do not rely on Exhibit 1051 ¶¶ 95–107, Exhibit 1060 ¶ 36 or Exhibit 1068 in a manner adverse to Patent Owner in rendering this Decision. Patent Owner's motion to exclude is thus moot as to this evidence as well.

Accordingly, we dismiss Patent Owner's Motion to Exclude in its entirety as moot.

VII. CONCLUSION

In light of the Federal Circuit's decision, we determine that the Petition establishes by a preponderance of the evidence that each of claims 1–16 of the '436 patent is unpatentable as obvious over the combination of the 2006 904 Operating Manual and Lindee (i.e., ground 1). We likewise determine that the Petition establishes by a preponderance of the evidence that each of claims 1–16 of the '436 patent is unpatentable as

obvious over the combination of the 2010 904 Operating Manual and Lindee (i.e., ground 2).

In summary,

Claims	35 U.S.C. §	Reference(s)	Claims Shown Unpatentable	Claims Not Shown Unpatentable
1–16	103	2006 904 Operating Manual, Lindee	1–16	
1–16	103	2010 904 Operating Manual, Lindee	1–16	
		Overall Outcome	1–16	

VIII. ORDER[7]

In consideration of the foregoing, it is hereby:

ORDERED that claims 1–16 of the ’436 Patent have been shown to be unpatentable;

FURTHER ORDERED that Patent Owner’s motion to exclude is *dismissed* as moot;

FURTHER ORDERED that the parties shall jointly submit a proposed redacted version of this Final Written Decision (Paper 79) as a confidential

[7] Should Patent Owner wish to pursue amendment of the challenged claims in a reissue or reexamination proceeding subsequent to the issuance of this Decision, we draw Patent Owner’s attention to the April 2019 Notice Regarding Options for Amendments by Patent Owner Through Reissue or Reexamination During a Pending AIA Trial Proceeding. *See* 84 Fed. Reg. 16,654 (Apr. 22, 2019). If Patent Owner chooses to file a reissue application or a request for reexamination of the challenged patent, we remind Patent Owner of its continuing obligation to notify the Board of any such related matters in updated mandatory notices. *See* 37 C.F.R. § 42.8(a)(3), (b)(2).

Exhibit within 14 days of this Decision. In the absence of such a proposal, at the expiration of 14 days from the date of this Decision, the entirety of the Final Written Decision will be made available to the public; and

FURTHER ORDERED that any party seeking judicial review must comply with the notice and service requirements of 37 C.F.R. § 90.2.

PETITIONER:

Ralph Powers
Daniel Yonan
Donald Banowit
Kyle Conklin
Trevor O'Neill
Graham Phero
Richard Crudo
STERNE KESSLER GOLDSTEIN & FOX PLLC
Tpowers-ptab@sternekessler.com
Dyonan-ptab@sternekessler.com
Dbanowit-ptab@sternekessler.com
Kconklin-ptab@sternekessler.com
Toneill-ptab@sternekessler.com
Jbuchanan-ptab@sternekessler.com
Gphero-ptab@sternekessler.com
Rcrudo-ptab@sternekessler.com

PATENT OWNER:

Michael Babbitt
Sarah Horton
WILKIE FARR & GALLAGHER LLP
mbabbitt@wilkie.com
shorton@wilkie.com