Trials@uspto.gov
571-272-7822

Paper 80
Date: October 21, 2024

PUBLIC VERSION

UNITED STATES PATENT AND TRADEMARK OFFICE

BEFORE THE PATENT TRIAL AND APPEAL BOARD

WEBER, INC.,
Petitioner,

v.

PROVISUR TECHNOLOGIES, INC.,
Patent Owner.

IPR2020-01557
Patent 10,639,812 B2

Before MITCHELL G. WEATHERLY, FRANCES L. IPPOLITO, and JON M. JURGOVAN, *Administrative Patent Judges.*

JURGOVAN, *Administrative Patent Judge.*

JUDGMENT
Final Written Decision on Remand
Determining Some Challenged Claims Unpatentable
35 U.S.C. § 318(a)

I. INTRODUCTION

A. Background

Weber, Inc. ("Petitioner") filed a Petition (Paper 3, "Pet.") requesting *inter partes* review of claims 1–11 of U.S. Patent No. 10,639,812 B2 (Ex. 1001, the "'812 patent"). Provisur Technologies, Inc. ("Patent Owner") filed a Preliminary Response. Paper 8 ("Prelim. Resp."). Applying the standard set forth in 35 U.S.C. § 314(a), we instituted review of claims 1–11 of the '812 Patent.

During trial, Patent Owner filed a Response (Paper 24, "Resp."), Petitioner filed a Reply (Paper 29), and Patent Owner filed a Sur-Reply (Paper 48).[1] Patent Owner also filed a Motion to Exclude (Paper 58), Petitioner filed an Opposition to the Motion to Exclude (Paper 59), and Patent Owner filed a Reply to Petitioner's Opposition (Paper 62).

An Oral Hearing took place on December 16, 2021. The Hearing Transcript is included in the record. Paper 63 ("Tr.").

We entered a Final Written Decision ("prior FWD") under 35 U.S.C. § 318(a) on April 9, 2024. Paper 67.

Petitioner appealed the prior FWD to the Court of Appeals for the Federal Circuit ("Federal Circuit") on April 29, 2022. On February 24, 2024, the Federal Circuit reversed-in-part, vacated-in-part, and remanded the prior FWD. *Weber, Inc. v. Provisur Tech., Inc.*, 92 F.4th 1059 (Fed. Cir. 2024) ("*Weber*").

Specifically, the Federal Circuit "reverse[d] the Board's finding that Weber's operating manuals do not qualify as printed publications." *Weber*,

[1] Patent Owner also submitted redacted versions of its Preliminary Response, Response, and Sur-Reply. Papers 8, 24, 48. The redactions relate to information subject to our Protective Orders. Papers 13, 57.

92 F.4th at 1069. The Federal Circuit further held that the prior art disclosed the "disposed over" limitation of claim 1 as properly construed, as well as the "stop gate" limitation of claim 1. *Weber*, 92 F.4th at 1069–1072. In addition, the Federal Circuit indicated it had considered Petitioner's remaining arguments and found them unpersuasive. *Weber*, 92 F.4th at 1072. Accordingly, the Federal Circuit vacated our determinations that Petitioner failed to establish unpatentability of claims 1–11 of the '812 patent, and remanded the case to the Board for further proceedings consistent with its opinion. *Weber*, 92 F.4th at 1072.

Following a conference call, with our authorization, Patent Owner and Petitioner filed briefs for the purpose of identifying portions of the record relating to matters that remain to be decided following the Federal Circuit's remand. Paper 75 (Patent Owner's Brief on Remand), Paper 73 (Petitioner's Brief on Remand).

Patent Owner filed a Petition for Writ of Certiorari (Ex. 2032) with the U.S. Supreme Court, which was docketed on June 27, 2024. Patent Owner requested authorization to file a motion for a stay pending the outcome of the Petition for Writ of Certiorari, which we denied. Paper 78.

For the reasons set forth below, after considering the arguments and evidence in light of the Federal Circuit's decision, we determine on remand that Petitioner has established by a preponderance of the evidence that claims 1–4 and 8–11 of the '812 patent would have been obvious over the prior art asserted in Petitioner's challenge grounds, but that obviousness has not been established for claims 5–7.

B. Real Parties in Interest

Petitioner identifies the following entities as real parties in interest: Textor, Inc.; Weber Maschinenbau GmbH Breidenbach; Weber

Maschinenbau GmbH Neubrandenburg; and Textor Maschinenbau GmbH. Pet. 86. Patent Owner identifies Provisur Technologies, Inc. as the sole real party in interest. Paper 5, 1.

C. Related Matters

The parties list as related matters *Provisur Technologies, Inc. v. Weber, Inc. et al*, Case No. 5-20-cv-06069 (MOWD); and IPR2020-01556, which challenges U.S. Patent No. 10,625,436 B2, and which, like the '812 patent, is a divisional of U.S. Application No. 13/099,325 filed May 2, 2011. Paper 5, 1; Pet. 86.

D. The '812 Patent

The '812 patent is titled "High Speed Slicing Machine." Ex. 1001, code (54). The slicing machine has a slicing station; a moveable frame supporting a food article feed mechanism frame; and a food article gate. Ex. 1001, code (57). Food articles are loaded onto a lift tray at a staging position which raises to an elevated position where food articles contact the food article gate in line with the feed paths of the food articles. *Id.* Food article grippers, driven individually along the feed paths, grip and move food articles toward the slicing station. *Id.* The food article gate assists in removal of end portions of food articles. *Id.*

Figure 1B of the '812 patent is shown below.

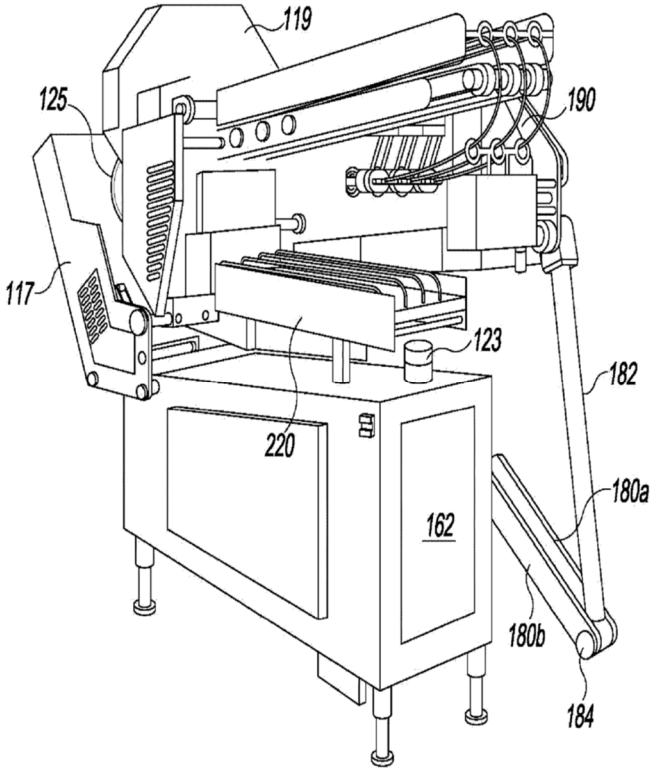

Figure 1B depicts slicing machine 100. *Id.* at 3:31–32. Lift tray assembly 220 is in a staging position to allow food articles to be loaded therein in multiple lanes. *Id.* at 9:28–35. Lift tray assembly 220 then elevates from the staging position to an elevated position that aligns food products with feed paths to a slicing blade of slicing head apparatus 124, as shown below in Figure 1, which is reproduced below. *Id.* at 9:60–10:5.

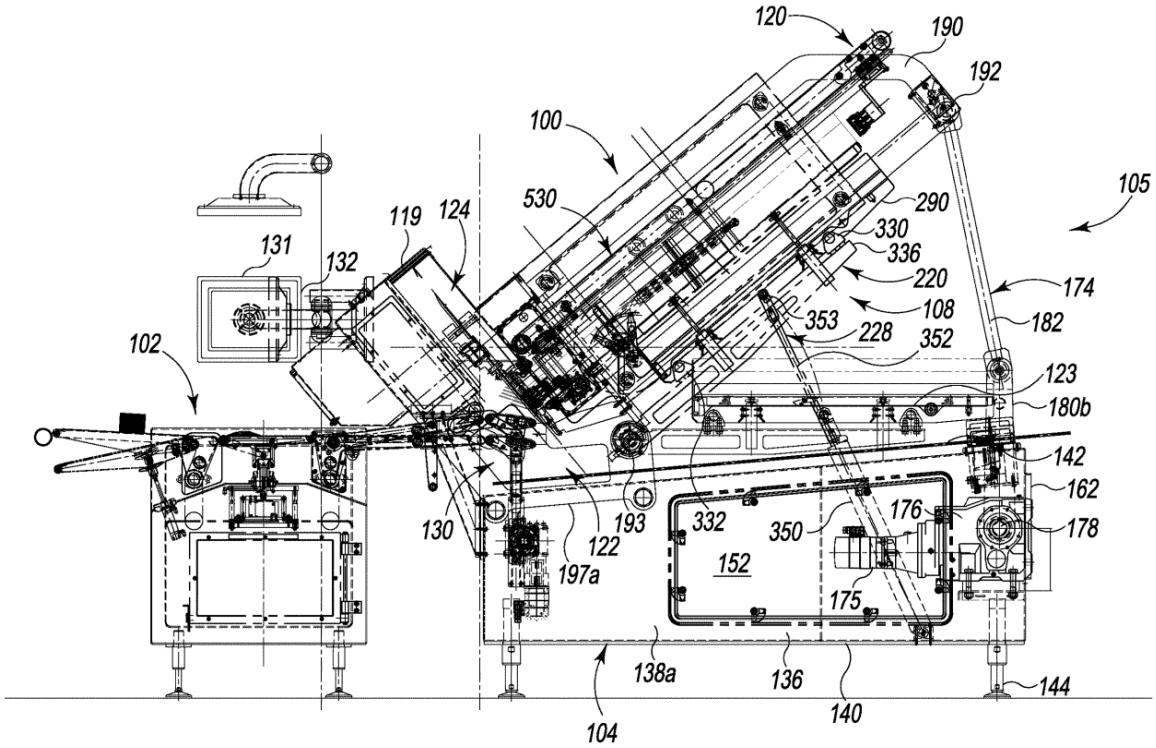

Figure 1, above, shows that slicing apparatus 100 includes base section 104 with collapsible frame 105, and an automatic food article loading apparatus 108 that receives food articles 110 to be sliced. *Id.* at 4:33–50. Slicing apparatus 100 further includes food article feed apparatus 120, food article end and scrap removal conveyor 122, slicing head apparatus 124, and slice receiving conveyor 130. *Id.*

Figures 13A to 13D of the ’812 patent are shown below.

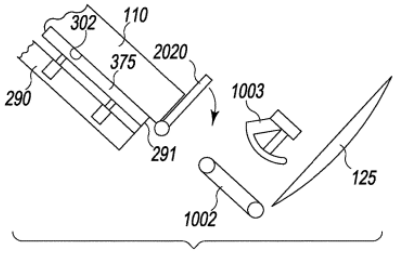

Fig. 13A

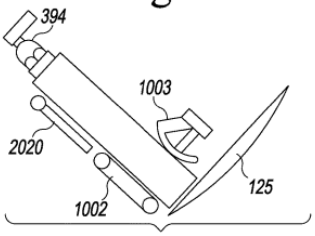

Fig. 13B

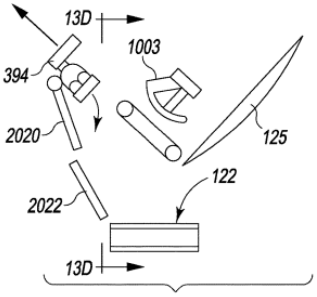

Fig. 13C

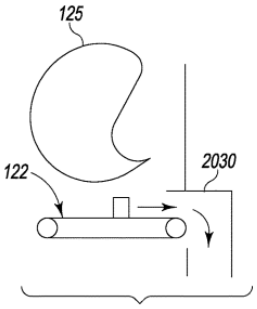

Fig. 13D

Figures 13A to 13D of the ’812 patent depict stages of operation of the ’812 Patent’s loaf feed apparatus. *Id.* at 4:7–15. In Figure 13A, the lift tray assembly 220 is elevated into position. Food article gate 2020 blocks food article 110 initially from advancing to the slicing station. *Id.* at 10:8–9. In Figure 13B, article gate 2020 lowers and acts as a floor for food article 110 while gripper 394 grips the food product and is driven by a drive belt to feed it into the slicing blade. *Id.* at 10:9–10. In Figure 13C, article gate 2020 further lowers and gripper 394 releases the remainder end of food article 110 so that it drops past article gate 2020 onto baffle 2022 to scrap removal

conveyor 122. *Id.* at 10:10–15. In Figure 13D, conveyor 122 conveys the remainder end of the food article to discharge chute 2030. *Id.* at 10:16–20.

E. Illustrative Claim

Petitioner challenges claims 1–11, which are all of the claims in the ’812 Patent. Claim 1 is independent and claims 2–11 depend, directly or indirectly, from claim 1. Claim 1 is reproduced below, with brackets noting Petitioner’s identifiers:

> [1.p] 1. A food article slicing machine comprising:
>
> [1.1] a) a slicing station comprising a knife blade and a knife blade drive driving the blade along a cutting path in a cutting plane;
>
> [1.2] b) a food article loading apparatus;
>
> [1.3] c) a food article feed apparatus disposed over said food article loading apparatus,
>
> [1.4] d) said food article feed apparatus having a conveyor assembly with independently driven endless conveyor belts,
>
> [1.5] e) wherein each of the conveyor belts is connected to a food article gripper for moving a food article along a food article feed path,
>
> [1.6] f) the conveyor assembly is an upper conveyor assembly,
>
> [1.7] g) a food article stop gate disposed upstream of the slicing station forms a portion of the food article feed path,
>
> [1.8] h) wherein the food article loading apparatus includes a lift tray assembly moveable between a staging position and an elevated position, said elevated position being a position wherein the food articles disposed within the lift tray assembly are in the food article feed path,
>
> [1.9] i) the food articles are supported in position along the food article feed path by at least the food article stop gate when the lift tray assembly is moved from its elevated position,
>
> [1.10] j) wherein the food article stop gate also serves as a door for the removal of food article end portions.

Ex. 1001, 11:12–38 (bracketed labels added in correspondence with Petitioner's identification of the claim elements for ease of discussion).

F. Asserted Grounds

Petitioner contends that the challenged claims would have been unpatentable based on the following grounds:

Claims Challenged	**35 U.S.C. §[2]**	**References/Basis**
1–5, 8–11	103	2006 904 Operating Manual,[3] Lindee,[4] Sandberg[5]
6, 7	103	2006 904 Operating Manual, Lindee, Sandberg, Mathues[6]
1–5, 8–11	103	2010 904 Operating Manual,[7] Lindee, Sandberg
6, 7	103	2010 904 Operating Manual, Lindee, Sandberg, Mathues

[2] The Leahy-Smith America Invents Act, Pub. L. No. 112–29, 125 Stat. 284 (2011) ("AIA"), included revisions to 35 U.S.C. §§ 102 and 103 that became effective after the effective filing date of the challenged claims. Therefore, we apply the pre-AIA version of 35 U.S.C. §§ 102 and 103.

[3] *Operating Manual: Slicer CCS 904* (English Language Translation), CCS-904_06_2006-07-01_GB / T-07_2005-11-10, by Weber Group, 1–288 (Ex. 1005) asserted as prior art under pre-AIA § 102(b). Pet. 28–29.

[4] US 5,628,237, issued May 13, 1997 (Ex. 1006) asserted as prior art under pre-AIA § 102(b). Pet. 29.

[5] US 2009/0145272 A1, filed October 21, 2008 (Ex.1012) asserted as prior art under pre-AIA § 102(a) and § 102(e). Pet. 29.

[6] US 2008/0016999 A1, published January 24, 2008 (Ex. 1013) asserted as prior art under pre-AIA § 102(b). Pet. 29.

[7] *Operating Manual for the Slicer CCS 904-02 (for product lengths to 1200 mm / 1600 mm)* (English Language Translation), by Weber Group, 1–259 (Ex. 1009) asserted as prior art under pre-AIA § 102(a). Pet. 29.

Pet. 30. In support of its proposed grounds, Petitioner relies on the Declaration of Dr. Richard Hooper. Ex. 1003. Patent Owner relies on the Declaration of Dr. William Howard. Ex. 2019. Petitioner relies on Reply Declaration (Ex. 1051), and Patent Owner deposed Dr. Hooper (Ex. 2017) during the trial.

II. LEVEL OF ORDINARY SKILL IN THE ART

Petitioner proposes that a person of ordinary skill in the art would have had "(1) a bachelor's degree (or equivalent) in mechanical engineering (or a similar field) and at least two years of experience working on food processing and/or packaging systems (or in a similar field)" or "(2) at least seven years of experience working on food processing and/or packaging systems (or in a similar field)." Pet. 20 (citing Ex. 1003 ¶¶ 26–27). Patent Owner does not contest Petitioner's definition or provide its own proposal. For purposes of this Decision, we adopt Petitioner's proposal because Petitioner's proposed definition is consistent with the level of skill demonstrated in the cited prior art references. *See Okajima v. Bourdeau*, 261 F.3d 1350, 1355 (Fed. Cir. 2001).

III. CLAIM CONSTRUCTION

Claim 1's limitation 1.3 recites in part "a food article feed apparatus *disposed over* the food article loading apparatus." The Federal Circuit reversed the construction set forth in the prior FWD and held that the "disposed over" limitation "requires only that the feed apparatus be generally positioned above the loading apparatus." *Weber*, 92 F.4th at 1070. We follow the Federal Circuit's construction of "disposed over" in this decision. We need not provide an express construction for any other claim terms to resolve the dispute before us. *Nidec Motor Corp. v. Zhongshan*

Broad Ocean Motor Co., 868 F.3d 1013, 1017 (Fed. Cir. 2017) (noting that only terms that are in controversy need to be construed, and then only to the extent necessary to resolve the controversy). We note, though, that in reaching our conclusion, we apply the ordinary and customary meaning to all claim terms. 37 C.F.R. § 42.100(b) (2019).

IV. CITED PRIOR ART REFERENCES

A. 2006 904 Operating Manual

The 2006 904 Operating Manual describes operations of a food slicer, Petitioner's CCS 904 food slicer. Ex. 1005, 3–9. Figure 6 is reproduced below:

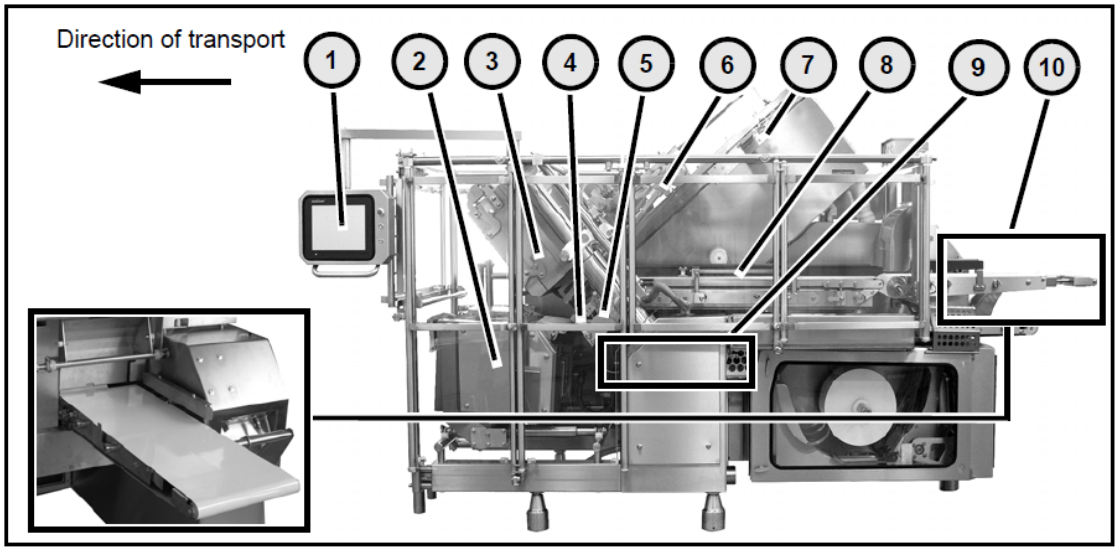

Fig. 6 Machine overview (for product lengths up to 1200 mm)

In the slicer illustrated in Figure 6, element 3 refers to a blade head housing, which contains a blade head drive, a blade head, and an involute blade. *Id.* at 15–16. Element 4 refers to a shear bar and product-section guide where the products are sliced. *Id.* Element 5 is a product bed conveyor that supports the guidance and transport of the product up to the shear bar, and serves as a product limit stop when the slicer is loaded and as a last piece ejection flap when the product's end pieces are ejected from the product

holder. *Id.* Element 6 is an upper product guide for pressing on the products from above to facilitate even transport into the slicing area. *Id.* Element 7 refers to product holders for gripping the products, feeding them into the outlet and preventing them from falling out during slicing. *Id.* Element 8 is a product conveyor for feeding the products into the slicing area. *Id.* Element 9 is an end piece removal conveyor for moving end pieces of the products out of the slicing area. *Id.* Finally, element 10 is a timing belt used by the operator or by a module connected upstream to feed products to the slicer. *Id.*

Figure 7 is reproduced below:

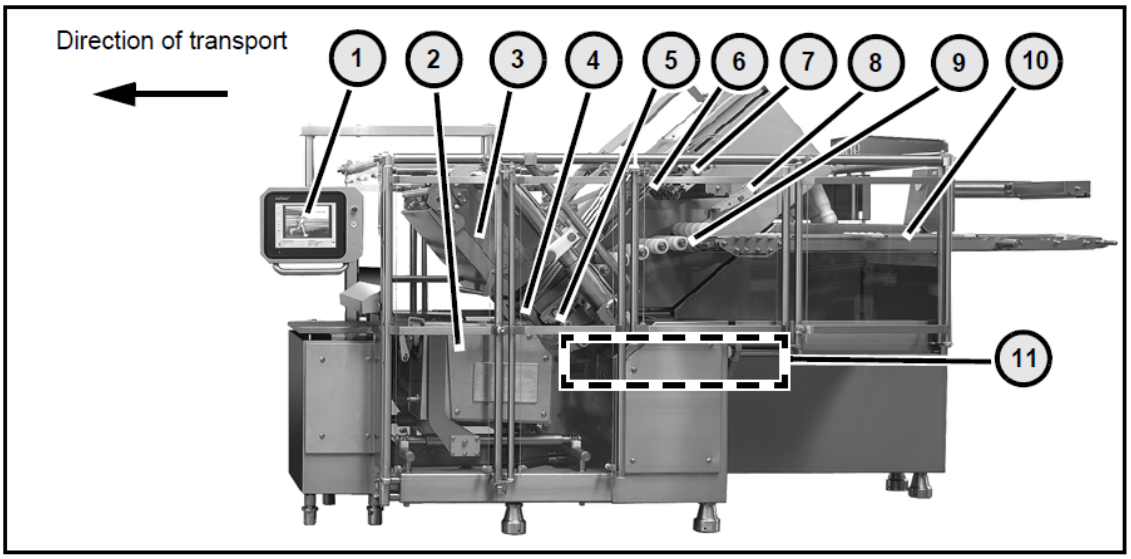

Fig. 7 Machine overview (for product lengths exceeding 1200 mm)

The slicer illustrated in Figure 7 includes elements 1–7, which are similar to elements 1–7 of the slicer illustrated in Figure 6. *Id.* at 17. In addition, the slicer of Figure 7 includes a blank holder (element 8) that presses the product on to the transport tracks and thus supports an even and safe guidance of the product. *Id.* at 17–18. Element 9 is an end piece ejection flap for guiding the product into the slicing area and enabling the end piece

to be ejected. *Id.* Element 10 is a product conveyor for feeding products into the slicing area. *Id.* Element 11 is an optional end piece removal conveyor for moving out of the slicing area the first slices or the end pieces of the products. *Id.*

Figure 28 of the 2006 904 Operating Manual is reproduced below.

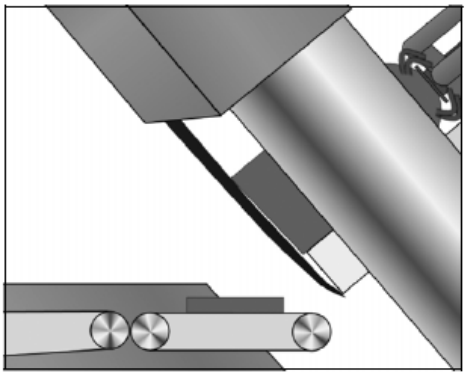

Fig. 28 Slicing process

Figure 28 illustrates a slicing process for products fed to the blade. *Id.* at 40.

Figure 29 of the 2006 904 Operating Manual is reproduced below.

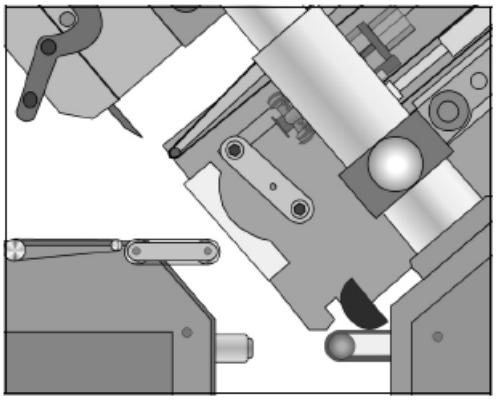

Fig. 29 Ejecting end pieces

Figure 29 illustrates ejection of end product pieces. *Id.* Specifically, the ejection process illustrated in Figure 29 (i) pulls back the end pieces of the products using the product holder, (ii) pivots the product bed conveyor into the ejection position, and (iii) uses the product holder to let the end pieces

fall such that (iv) the end pieces fall on to the end piece removal conveyor and are removed. *Id.*

B. 2010 904 Operating Manual

The 2010 904 Operating Manual describes the operations of Petitioner's CCS 904-02 food slicer. Ex. 1009, 1, 3–8. According to Petitioner, the 2010 904 Operating Manual is "substantively identical" to the 2006 904 Operating Manual except that it describes "an additional, optional feature that enables each of the upper conveyors (i.e., the 'product guide') to be independently driven by separate drive motors." Pet. 9 (citing Ex. 1009, 166; Ex. 1003 ¶¶ 45–46). Because the drive motors are the focus of Petitioner's reliance on the 2010 904 Operating Manual, our summary below centers on that feature.

Figure 211 of the 2010 904 Operating Manual is reproduced below:

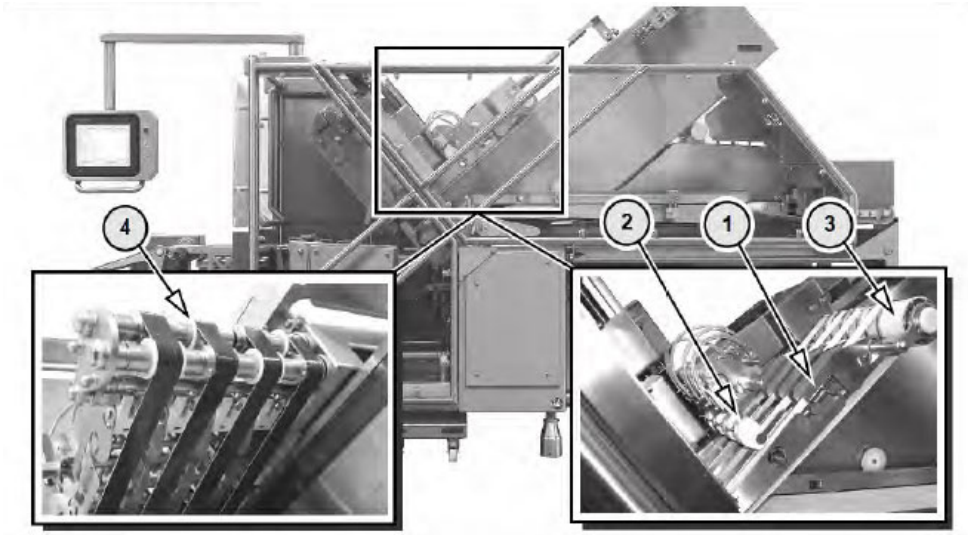

Fig. 211 Product guide

Figure 211 shows support frames (element 1), a cylinder holder (element 2), and a standard drive unit (element 3) or an optional drive unit with separate drives (element 4). Ex. 1009, 166. With the standard drive unit, all tracks of the product guide are driven at the same speed by the drive unit. *Id.* In the

optionally available version of the slicer with separate drives, all tracks of the product guide can be individually driven with different speeds. *Id.*

C. Lindee

Lindee describes a high-speed slicing machine for two or more food loaves. Ex. 1006, codes (54), (57). Lindee's high-speed slicing machine supports first and second food loaves for movement along parallel loaf paths into a slicing station where both loaves are sliced by a cyclically driven knife blade, the slices being stacked or shingled in groups on a receiving conveyor located below the slicing station. *Id.*

Lindee's Figure 3 is reproduced below:

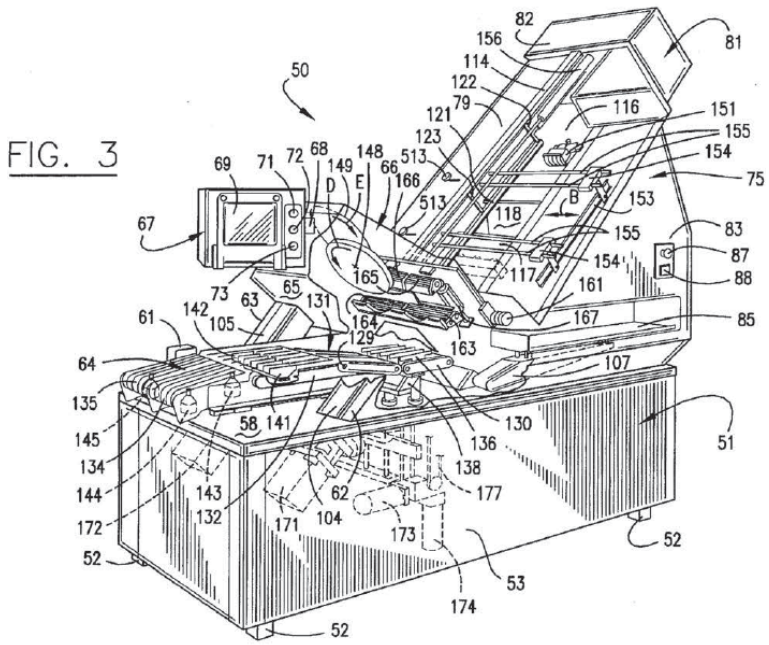

Figure 3 illustrates Lindee's slicing machine. *Id.* at 3:20–33. Slicing machine 50 in Lindee's Figure 3 includes, *inter alia*: a slicing station 66; a knife blade 149; a loaf feed mechanism 75 which includes manual or automated feeds from the near and far sides of the slicing machine; and gripper mechanisms 151 at the near and far sides of the slicing machine. *Id.* at 7:51–8:17. Grippers 151, one on each loaf path, grip the end of a loaf

remote from the slicing station, and for each gripper, a loaf feed drive impels the gripper toward the slicing station and then moves the gripper back to a home position, releasing an unsliced loaf butt on the way through a door opening in the loaf support. *Id.* at 19:55–20:53.

D. Sandberg

Sandberg discloses an automatically loaded, continuous feed machine with upper and lower conveyor pairs that drive food articles into a cutting plane. Ex. 1012 ¶ 6. A gate positioned in front of the conveyors abuts the food articles to be sliced. *Id.* When the gate lowers, the food articles proceed on the conveyors to the slicing blade and are sliced. *Id.* When the trailing ends of the food articles clear the gate, the gate raises and new food articles are loaded in the feed paths. *Id.* A lift tray assists in loading food articles for slicing in separate lanes. *Id.* at ¶ 17.

Sandberg's Figure 1 is reproduced below.

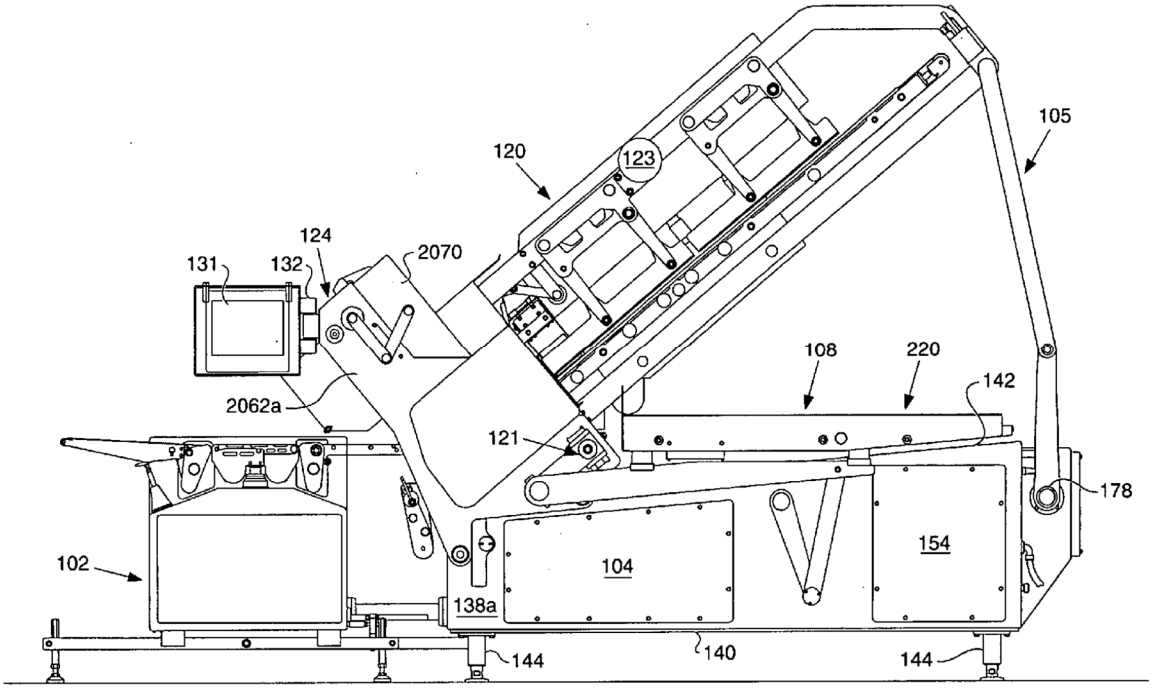

Sandberg's Figure 1 shows a side view of a slicing machine with automatic food article loading apparatus with lift tray. *Id.* ¶ 22. In Sandberg's Figure 1, slicing apparatus 100 includes, *inter alia*: base section 104, collapsible frame 105, and automatic food article loading apparatus 108. *Id.* ¶ 120. Apparatus 108 includes lift tray assembly 220, lift tray positioning apparatus 228, and food article lateral transfer apparatus 236. *Id.* ¶¶ 134–137; Figs. 7–9. Lift tray assembly 220 receives food articles to be sliced. *Id.* ¶ 134. Lift tray positioning apparatus 228 pivots the tray assembly 220 to be laterally adjacent to, and parallel with, the food article feed apparatus 120. *Id.* Food article lateral transfer apparatus 236 moves the food articles from the lift tray assembly 220 onto the food article feed apparatus 120 to be fed to the slicing blade. *Id.*

E. Mathues

Mathues discloses a feed mechanism for a food slicing machine. Ex. 1013, codes (54), (57). Mathues's Figure 1 is shown below.

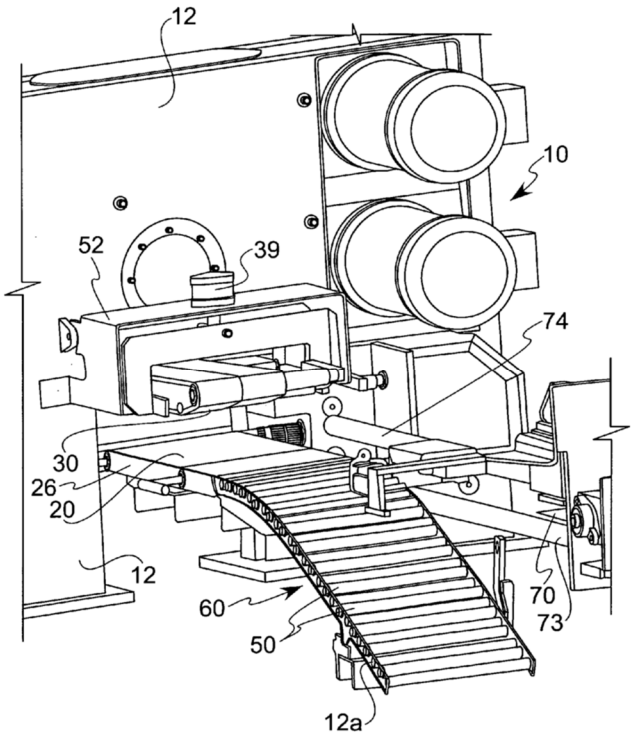

Mathues's Figure 1 shows food slicing machine 10 which includes drive belt 70 for driving a food gripper to feed food articles into a slicing station. Ex. 1013 ¶¶ 14–15, 56–58. Drive belt 70 is supported by rollers, one of which is driven by drive shaft 25 through driven gear 71 connected to servo motor 90. Ex. 1013 ¶¶ 15, 56, 59–63, Figs. 1, 2, 5, 6, 8.

V. ANALYSIS OF GROUNDS

A. Legal Standards for Obviousness

In *Graham v. John Deere Co. of Kansas City*, 383 U.S. 1 (1966), the Supreme Court set out a framework for assessing obviousness under § 103 that requires consideration of four factors: (1) the "level of ordinary skill in the pertinent art," (2) the "scope and content of the prior art," (3) the "differences between the prior art and the claims at issue," and (4) "secondary considerations" of nonobviousness such as "commercial success, long felt but unsolved needs, failure of others, etc." *Id.* at 17–18; *KSR Int'l Co. v. Teleflex Inc.*, 550 U.S. 398, 407 (2007). We discussed the first *Graham* factor in Section II and the second *Graham* factor in Section IV. The record includes no evidence or arguments relating to the fourth *Graham* factor. We address the third *Graham* factor in the obviousness analysis and conclusion below.

B. Ground 1: Obviousness Based on the 2006 904 Operating Manual, Lindee, and Sandberg

We now address Petitioner's and Patent Owner's contentions regarding claim 1 of the '812 patent. For the reasons that follow, we determine that Petitioner has shown that claim 1 would have been obvious of the combination of the 2006 904 Operating Manual, Lindee, and Sandberg in light of the Federal Circuit's decision notwithstanding Patent Owner's arguments to the contrary.

1. Claim 1

The limitations of claim 1 are addressed below sequentially, addressing the parties' contentions for each limitation.

a) Preamble 1.p: Slicing Machine

The preamble 1.p of claim 1 recites "A food article slicing machine comprising:"

Petitioner contends that the 2006 904 Operating Manual discloses that the 904 slicer is a machine that slices food products ("food articles") and is thus a "food article slicing machine" as recited in claim 1's preamble 1.p. Pet. 32 (citing Ex. 1005, 10–11; Ex. 1003 ¶¶ 101–102).

Petitioner further asserts that Lindee discloses that its "invention relates to an improved high speed food loaf slicing machine" and thus discloses the preamble 1.p of claim 1. *Id.* at 30 (citing Ex. 1006, 2:13–14; Ex. 1003 ¶¶ 103–104).

Patent Owner does not dispute Petitioner's contentions concerning the preamble.

We agree with Petitioner that the preamble of claim 1 is disclosed by each of the slicing machines disclosed in 2006 904 Operating Manual, Lindee, and Sandberg. Thus, we need not and do not decide whether the preamble is limiting.

b) Limitation 1.1: Slicing Station

Limitation 1.1 recites "a) a slicing station comprising a knife blade and a knife blade drive driving the blade along a cutting path in a cutting plane."

Petitioner states that the 2006 904 Operating Manual discloses that "'[t]he slicing area of the Slicer consists of assemblies used directly to slice the product' including a "[b]lade.'" Pet. 33 (citing Ex. 1005, 11). Petitioner

asserts that "[a] POSA would have understood that the disclosed blade in the 2006 904 [Operating Manual] is synonymous with the claimed 'knife.'" *Id.* (citing Ex. 1003 ¶¶ 105–107).

Petitioner reproduces Figure 2 of the 2006 904 Operating Manual, as shown below.

1.1.2 Slicing area

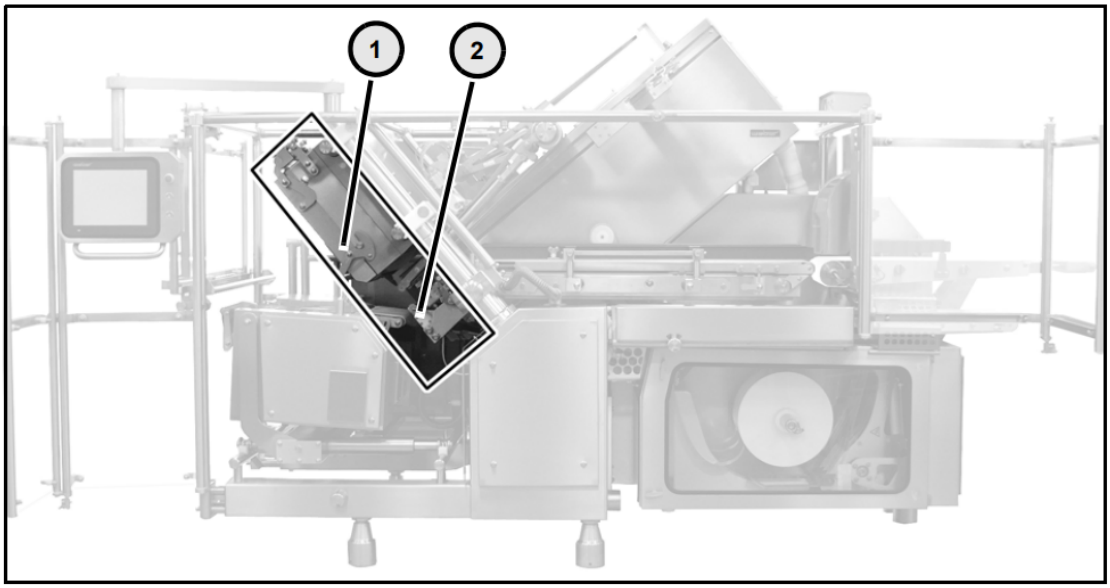

Fig. 2 Slicing area

Petitioner asserts that Figure 2 shows that "the slicing area (i.e., the claimed "slicing station") is located at the end of the food article feed path near the bottom of the inclined feeding section of the slicer." Pet. 33–34 (citing Ex. 1005, Fig. 2; Ex. 1003 ¶ 107). The 2006 904 Operating Manual indicates that element 1 in Figure 2 is a "blade." Ex. 1005, 11.

Petitioner asserts that Figures 294 and 299 of the 2006 904 Operating Manual show that the "knife blade is a flat, partially disc-shaped blade that is intended to rotate about a central axis." Pet. 34 (citing Ex. 1005, 207–212, 287, Figs. 294, 299; Ex. 1003 ¶ 107). Petitioner contends that "[r]otating the blade for slicing requires a drive unit of some type, and thus a POSA would have understood, or at least suggested, that there is a 'knife blade drive' as

claimed coupled to the knife blade to rotate the blade." *Id.* at 34–35 (citing Ex. 1003 ¶ 107).

Petitioner reproduces Figure 299 of the 2006 904 Operating Manual as shown below.

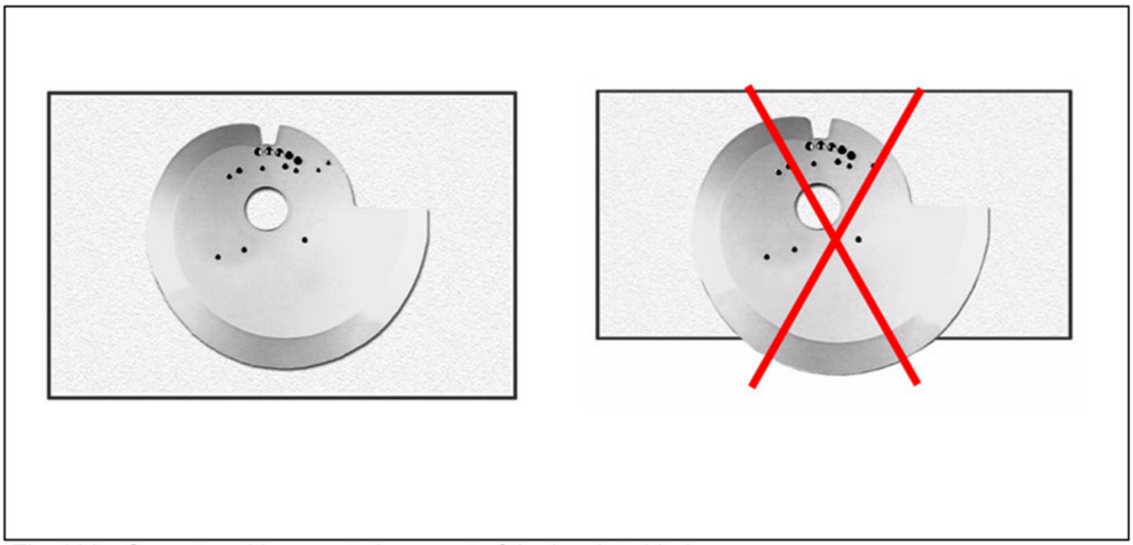

Fig. 299 Correct and incorrect placement of the involute blade

Referring to the blade shown in Figure 299, Petitioner asserts that "[t]he thin, disc type shape of the knife blade combined with how it is rotated (i.e., about the large central hole in the image below) means that the blade is rotated (i.e., "driven" as claimed) along a cutting path in a plane." *Id.* at 35. Accordingly, Petitioner contends, the 2006 904 Operating Manual discloses the "slicing station" of limitation 1.1.

Patent Owner does not dispute Petitioner's contention that the 2006 904 Operating Manual discloses limitation 1.1.

We find that Petitioner has shown that the 2006 904 Operating Manual discloses limitation 1.1.

Petitioner also contends that "Lindee discloses a 'slicing station 66' that includes a 'round knife blade 149.'" Pet. 35 (citing Ex. 1006, 7:51–64).

According to Petitioner, "[t]he knife blade is used 'for repetitive slicing' of the food loaves." *Id.* (citing Ex. 1006, 2:19–21).

Petitioner reproduces Lindee's Figure 3 as shown below.

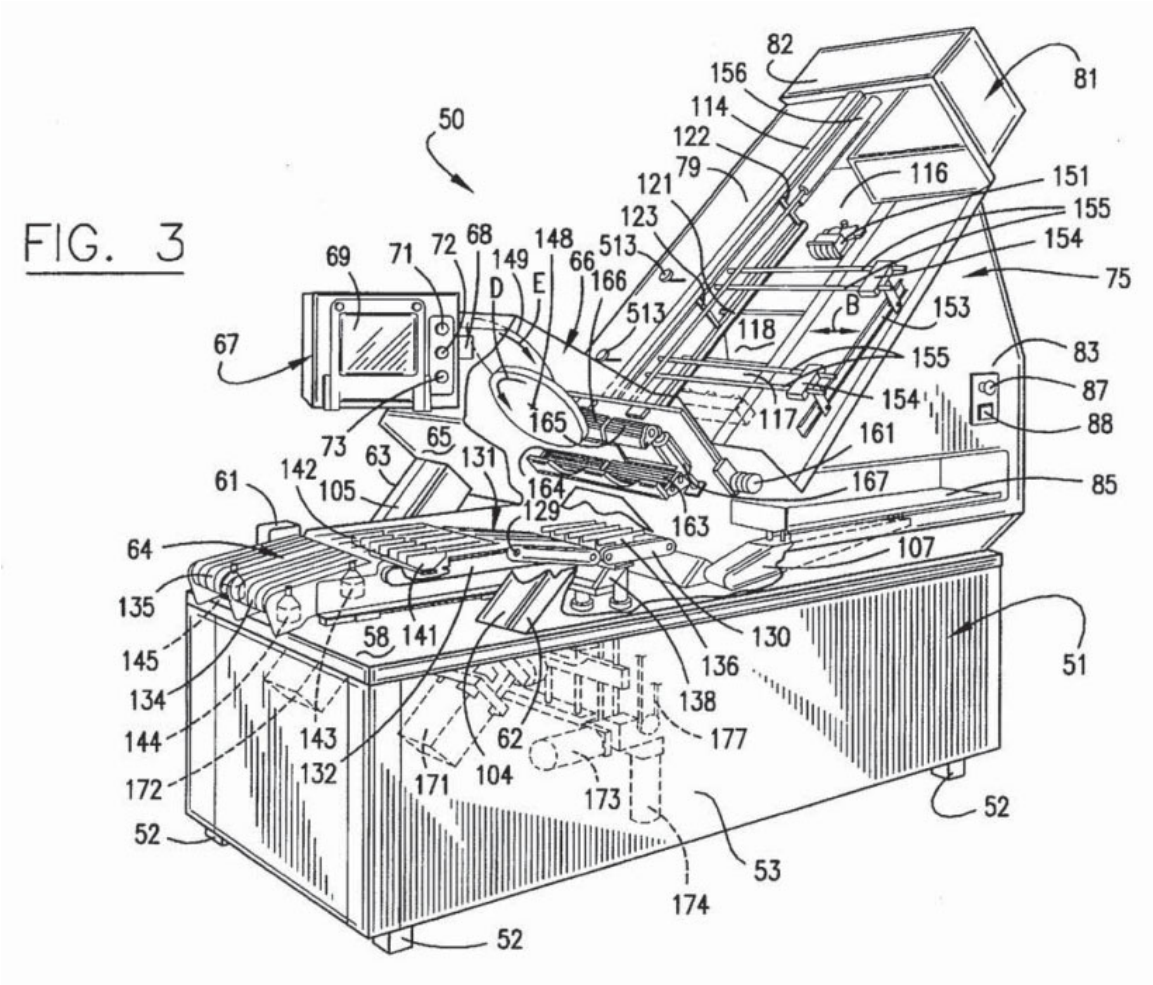

Petitioner contends that Lindee's Figure 3 shows that "the slicing station is disposed at the end of the food article fed path (near the left hand side of the machine in Figure 3)." Pet. 35. Petitioner further asserts that "Lindee discloses that 'a knife blade drive driving the knife blade along a predetermined cutting path.'" *Id.* (citing Ex. 1003, 2:15–16; Ex. 1003 ¶¶ 110–111). Accordingly, Petitioner asserts that Lindee also discloses limitation 1.1. *Id.* (citing Ex. 1003 ¶ 109).

Patent Owner does not dispute Petitioner's contention.

We find that Petitioner has shown that Lindee discloses limitation 1.1.

Petitioner further asserts that "Sandberg discloses 'a slicing head section 124' (also called "slicing head section 14) that includes a 'slicing blade' (also called a "knife blade"). Pet. 36 (citing Ex. 1012 ¶¶ 9–11, 187–190). Petitioner reproduces Sandberg's Figure 1, as shown below.

FIG. 1

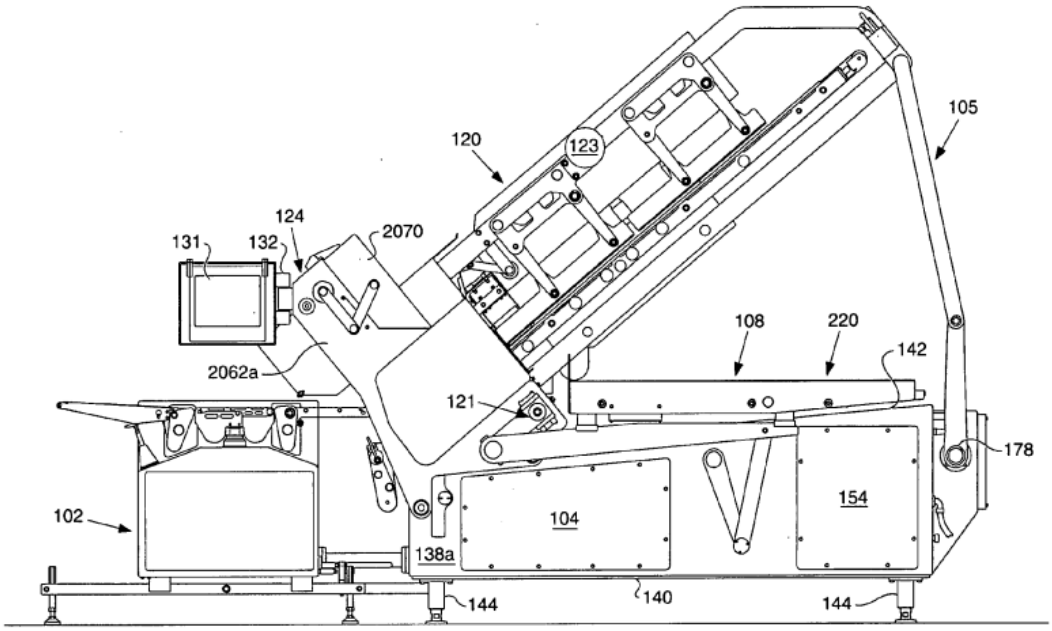

According to Petitioner, Sandberg's Figure 1 discloses that "apparatus 124 is located at the end of the feed path." Pet. 36 (citing Ex. 1003 ¶ 51). Petitioner asserts that "Sandberg also discloses that the blade travels along a 'cutting path within a cutting plane.'" *Id.* (citing Ex. 1012 ¶ 195, Fig. 32). Accordingly, Petitioner asserts that Sandberg also discloses limitation 1.1. *Id.*

Patent Owner does not dispute Petitioner's contention that Sandberg discloses limitation 1.1

We find that Petitioner has shown that Sandberg discloses limitation 1.1.

Hence, we find that Petitioner has shown that each of the 2006 904 Operating Manual, Lindee, and Sandberg discloses limitation 1.1.

c) Limitation 1.2: Loading Apparatus

Limitation 1.2 recites "b) a food article loading apparatus."

Petitioner contends that "[t]he 2006 904 manual discloses several different structural elements that work together to form the claimed 'food article loading apparatus.'" Pet. 37 (citing Ex. 1003 ¶¶ 112–114).

Petitioner provides an annotated version of Figure 5 of the 2006 904 Operating Manual as shown below.

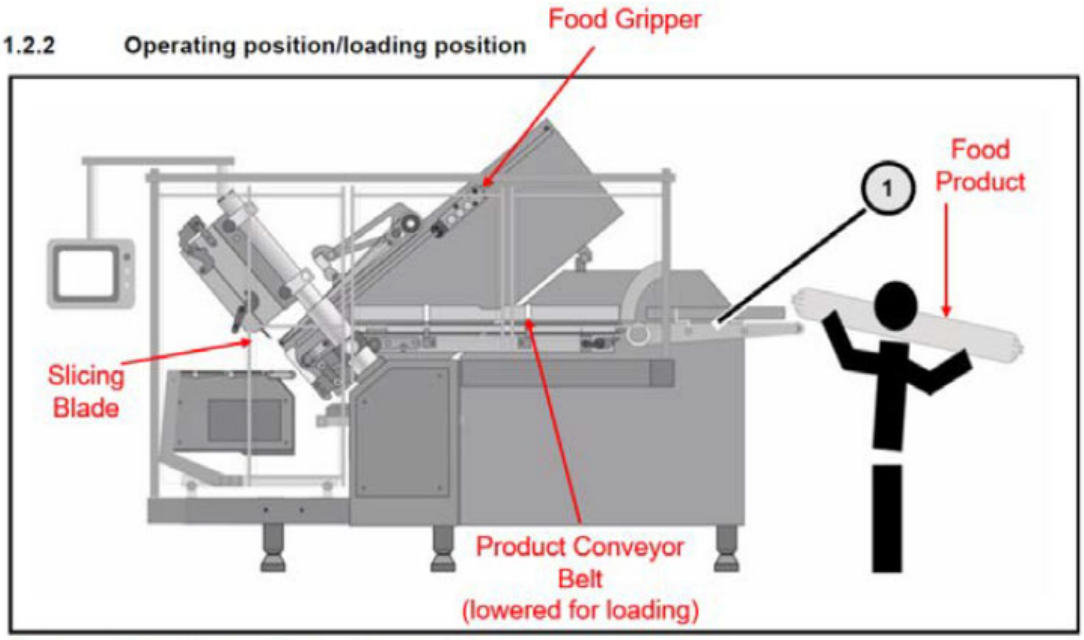

Fig. 5 Operating position/loading position

Petitioner asserts that Figure 5 discloses that "loading the 904 slicer with food articles begins by loading food articles on a timing belt (element (1)." Pet. 37 (citing Ex. 1005, 14, 39–40; Ex. 1003 ¶¶ 112–114). Petitioner contends that "[a] product conveyor belt (also called a "product conveyor")

is lowered to a staging position to receive food articles from the timing belt." *Id.* (citing Ex. 1005, 39–40; Ex. 1003 ¶¶ 112–114).

Petitioner further states that "[a]fter food articles are loaded on the product conveyor belt by the timing belt, the food articles 'are lifted into the infeed position by the product conveyor belt.'" Pet. 38 (citing Ex. 1005, 40; Ex. 1003 ¶ 113).

Petitioner provides an annotated version of Figure 14 of the 2006 904 Operating Manual as shown below.

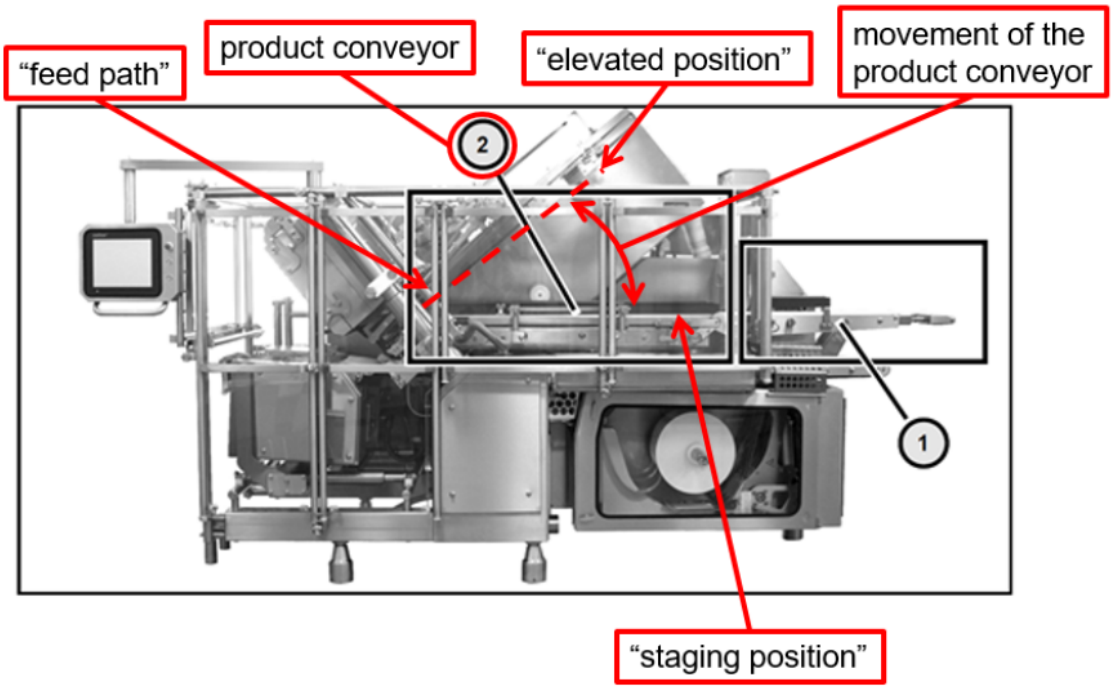

Pet. 39. According to Petitioner, "Figure 14 . . . illustrates the motion of the product conveyor belt as it moves into the infeed position and places the food articles at the beginning of the food article feed path." Pet. 38 (citing Ex. 1003 ¶ 113).

Petitioner contends that "[t]he combination of the product conveyor belt, timing belt, and related actuators and supporting structure disclose the claimed 'food article loading apparatus' because these elements work

together to load food articles into the feed path for slicing." *Id.* (citing Ex. 1003 ¶¶ 113–114). Accordingly, Petitioner contends that the 2006 904 Operating Manual discloses limitation 1.2. *Id.*

Patent Owner does not dispute Petitioner's contentions concerning the "loading apparatus" of limitation 1.2.

We find that Petitioner has shown that the combination of the 2006 904 Operating Manual's product conveyor belt, timing belt, and related actuators and supporting structure discloses limitation 1.2.

d) Limitation 1.3: Feed Apparatus

Limitation 1.3 recites "c) a food article feed apparatus disposed over said food article loading apparatus."

Patent Owner argued during the trial that the "disposed over" limitation was not disclosed by the combination of the 2006 904 Operating Manual, Lindee, and Sandberg. Resp. 46–50. On appeal, however, the Federal Circuit agreed with Petitioner's construction of "disposed over" which "requires only that the feed apparatus be generally positioned above the loading apparatus." *Weber*, 92 F.4th at 1070. Since Patent Owner did not dispute that Petitioner's asserted prior art disclosed limitation 1.3 under Petitioner's construction, the Federal Circuit held that the combination of 2006 904 Operating Manual, Lindee, and Sandberg discloses the "disposed over" limitation. *Id.* at 1069–1070.

Although the Federal Circuit's decision is dispositive for limitation 1.3, we discuss Petitioner's contentions concerning the "food article feed apparatus" since it is recited again in limitation 1.4.

Specifically, Petitioner contends that "[t]he 2006 904 [Operating Manual] discloses several different structures that work together to form 'a food article feed apparatus' as claimed." Pet. 39 (citing Ex. 1003

¶¶ 118–119). Petitioner asserts that "[a]fter the product conveyor raises the food articles into the feed path, the 2006 904 [Operating Manual] discloses that a 'product holder grips the loaded product and guides it into the slicing area.'" *Id.* at 39–40 (citing Ex. 1005, 23, 40).

Petitioner reproduces Figure 12 of the 2006 904 Operating Manual as shown below.

1.6.4 Product holder

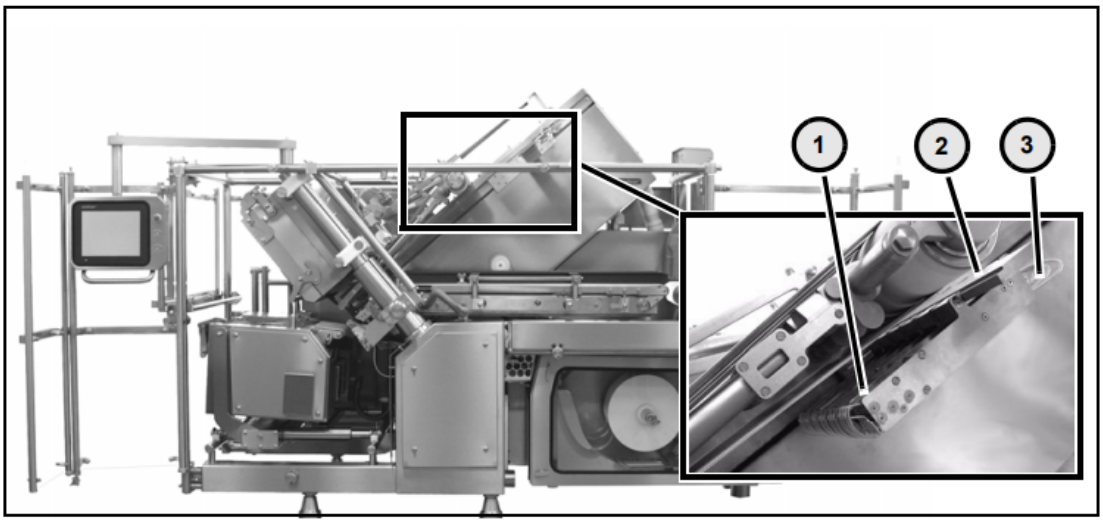

Fig. 12 Position of the product holder on the Slicer

According to Petitioner, "[t]he product holder is visible as element (1) in Figure 12." Pet. 40 (citing Ex. 1003 ¶ 119).

Petitioner asserts that "[t]he product holder works together with the 'upper product guide' to guide the food to the slicing blade." *Id.* (citing Ex. 1005, 22, 40; Ex. 1003 ¶ 119). Petitioner further alleges that "[t]he upper product guide presses down on the food article from above and ensures that the food article is properly guided to the slicer blade." *Id.* (citing Ex. 1005, 40; Ex. 1003 ¶ 119). Petitioner contends that "[t]he product holder, upper product guide, and related actuators form the claimed 'food article feed apparatus' because they comprise an apparatus that

functions to feed the food into the slicing blade." *Id.* (citing Ex. 1005, 10; Ex. 1003 ¶ 119).

We find that Petitioner has shown that the 2006 904 Operating Manual's product holder, upper product guide, and related actuators are elements of the "food article feed apparatus." Pet. 40.

In addition, the Federal Circuit's decision establishes that the "disposed over" aspect of limitation 1.3 is disclosed by the combination of the 2006 904 Operating Manual, Lindee, and Sandberg.

e) Limitation 1.4: Conveyor Assembly with Independently Driven Endless Conveyor Belts

Limitation 1.4 recites "d) said food article feed apparatus having a conveyor assembly with independently driven endless conveyor belts."

Petitioner asserts that "[j]ust like the 2006 904 [Operating Manual], Lindee discloses a food slicer that uses a food gripper mechanism 151 to grip food products and advance the products down an inclined support surface to a slicing blade." Pet. 41 (citing Ex. 1006, 8:65–9:45; Ex. 1003 ¶¶ 121–124).

Petitioner provides an annotated version of Lindee's Figure 3 as shown below.

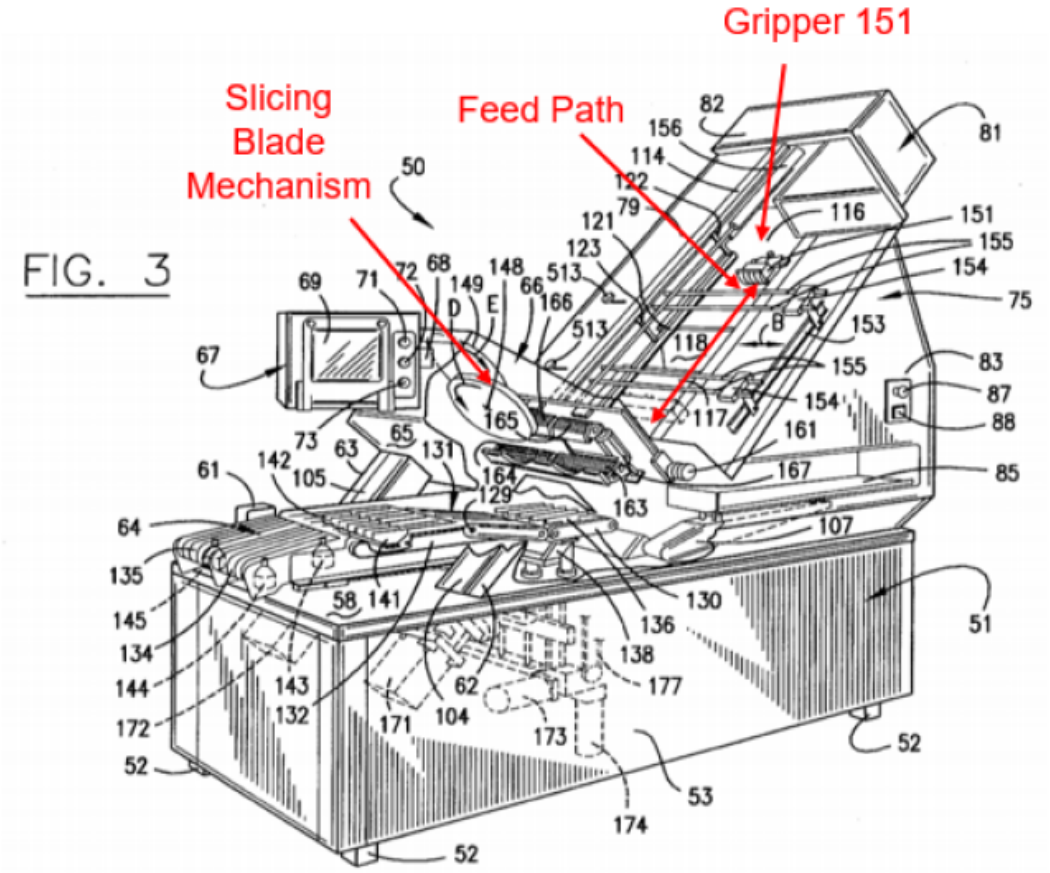

Pet. 41. In relation to Figure 3, Petitioner asserts that "Lindee discloses that the food grippers are driven along the feed path by a timing belt 334." *Id.* at 42 (citing Ex. 1006, 18:32–35; 19:55–67). Petitioner argues that "[a] POSA would have understood that timing belt 334 is a conveyor belt because timing belt 334 is a belt that is stretched between an idler sprocket 335 and a drive sprocket 180, which is the type of structure that defines a conveyor belt." *Id.* (citing Ex. 1006, 18:34–37; Ex. 1003 ¶ 122). Petitioner alleges that "[t]his type of conveyor belt is 'endless' as claimed because the belt wraps in a continuous loop around the two sprockets." *Id.* (citing Ex. 1003 ¶ 122).

Petitioner contends that "Lindee also discloses using two or more independently driven gripping mechanisms." *Id.* (citing Ex. 1006, 8:53–59, 9:23–32, 18:9–17; Ex. 1003 ¶ 123). Petitioner asserts that "[e]ach of

Lindee's grippers has a corresponding servo motor that independently powers the movement of the corresponding timing belt (and thus, the gripper) along the feed path." *Id.* (citing Ex. 1006, 8:53–59, 9:23–32, 18:9–17; Ex. 1003 ¶ 123). Petitioner states that "Lindee explains that this allows the feed rate of each gripper (and corresponding food product gripped by the gripper) to be different 'to adjust slice thickness for one loaf independently of the other.'" *Id.* (citing Ex. 1006, 9:18–20; Ex. 1003 ¶ 123). Accordingly, Petitioner contends that "Lindee discloses a 'food article feed apparatus having a conveyor assembly with independently driven endless conveyor belts.'" *Id.* (citing Ex. 1003 ¶ 124).

Patent Owner does not dispute Petitioner's contentions for limitation 1.4.

We find that Petitioner has shown that the combination of the 2006 904 Operating Manual and Lindee discloses limitation 1.4.

f) Limitation 1.5: Each Conveyor Belt Connected to Gripper

Limitation 1.5 recites "e) wherein each of the conveyor belts is connected to a food article gripper for moving a food article along a food article feed path."

Petitioner contends that "Lindee discloses a conveyor belt gripper actuation system." Pet. 43 (citing § VI.A.5). Petitioner argues that "[a] POSA would have understood that the gripper must be connected to the conveyor belt (i.e., timing belt 334 in Lindee) to enable the conveyor to move the gripper along the feed path." *Id.* (citing Ex. 1003 ¶ 125).

Petitioner provides an annotated version of Lindee's Figure 7A, as shown below.

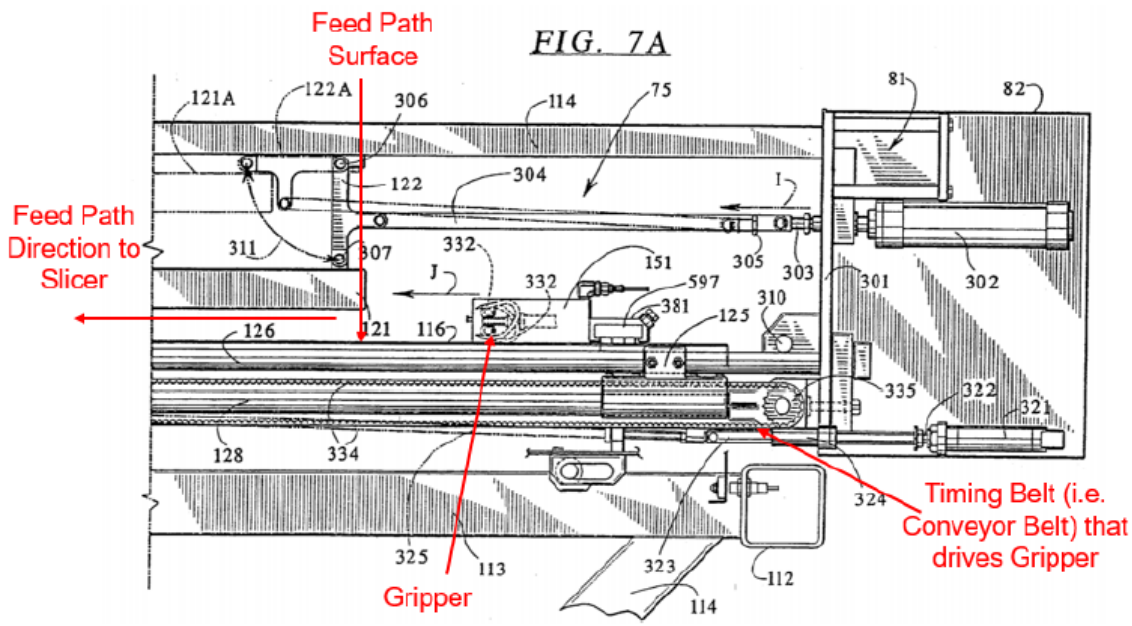

Pet. 44. In Figure 7A and corresponding text, Petitioner asserts that Lindee discloses that "'gripper 151 is mounted on an extension 597 of carriage 125' and '[c]arriage 125 is connected to the upper run of a timing belt 334.'" *Id.* at 43 (citing Ex. 1006, 18:18–34). According to Petitioner, "[t]he gripper is connected to and supported by carriage 125, which slides along shafts 126 and 128 as timing belt 334 carries carriage 125 along the feed path." *Id.* (citing Ex. 1003 ¶¶ 126–128). Petitioner argues that "[a] POSA would have understood that Lindee's gripper discloses the claimed gripper at least because Lindee's includes a structure that can actuate to grasp and release the food product." Pet. 43 (citing *id.* at § IV.A; Ex. 1003 ¶ 126). Thus, Petitioner asserts that "Lindee discloses a food gripper that is mechanically connected to and driven by timing belt 334 to move the food along the feed path as claimed." *Id.*

Petitioner contends that "[a] POSA would have been motivated to use Lindee's mechanical connection between the gripper and conveyor belt in the modified 904 slicer . . . to allow the modified conveyor system to move

the gripper (and thus the food) along the feed path. Pet. 44 (citing *id.* at § VI.A.12; Ex. 1003 ¶ 158). Petitioner asserts that "[s]uch a modification would have been the simple combination of known prior elements (the modified 904 slicer's conveyor system and Lindee's conveyor-gripper connection) to achieve predictable results (connecting the gripper to the conveyor belts)." *Id.* (citing *KSR*, 550 U.S. at 401). Furthermore, Petitioner alleges that "a POSA would have also been motivated to use Lindee's connection system between the conveyor and the grippers because they were already motivated to use Lindee's conveyor system to move the grippers, and it is simpler to use the existing, disclosed connection between the gripper and the conveyor instead of designing such a connection independently." *Id.* (citing Ex. 1003 ¶ 159). Petitioner argues "[a] POSA would have had a reasonable expectation of success making this modification because it would have been the implementation of a simple mechanical structure that requires minimal modification for use in the modified 904 slicer." *Id.* at 44–45 (citing Ex. 1003 ¶¶ 129, 167). Petitioner states that "[s]uch a modification would have been well within the skills of a POSA." *Id.* at 45 (citing Ex. 1003 ¶¶ 129, 167). Accordingly, Petitioner contends that the combination of the 2006 904 Operating Manual and Lindee discloses limitation 1.5. *Id.*

Patent Owner does not dispute Petitioner's contentions concerning limitation 1.5.

We find that Petitioner has shown that the combination of the 2006 904 Operating Manual and Lindee discloses limitation 1.5.

g) Limitation 1.6: Upper Conveyor Assembly

Limitation 1.6 recites "f) the conveyor assembly is an upper conveyor assembly."

To explain its contentions for limitation 1.6, Petitioner provides an annotated version of Figure 5 of the 2006 904 Operating Manual, as shown below.

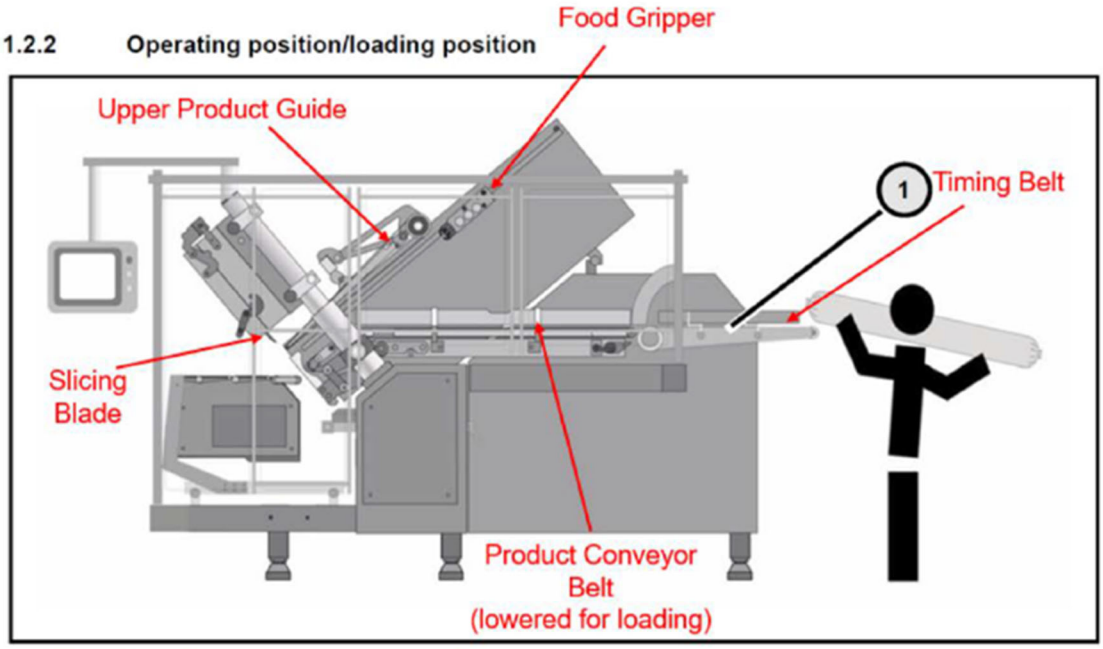

Fig. 5 Operating position/loading position

Pet. 46. Petitioner contends that "[a]s shown in Figure 5 below, the gripper of the 904 slicer (i.e., the product holder) is disposed above the product conveyor belt (i.e., the claimed "food article loading apparatus) in an upper portion of the food article feed apparatus." *Id.* at 45 (citing Ex. 1003 ¶ 131). Petitioner argues that "a POSA would have been motivated to connect the food gripper of the 904 slicer directly to the conveyor assembly." Pet. 45 (citing *id.* at § VI.A.6). According to Petitioner, "the most logical position for the conveyor belts would be immediately adjacent to the product grippers in the upper portion of the food article feed apparatus." *Id.* (citing Ex. 1003 ¶ 132). Petitioner asserts that "[t]his position minimizes the amount of modification needed to be made to the connection between the food grippers and the conveyor belt disclosed in Lindee." *Id.* Therefore, Petitioner

contends that "the conveyor assembly in the modified 904 slicer is an 'upper' assembly because it is disposed above the claimed food article loading apparatus in an upper portion of the food article feed apparatus." *Id.* Accordingly, Petitioner asserts that the combination of the 2006 904 Operating Manual and Lindee discloses limitation 1.6. *Id.*

Although Patent Owner disputes the motivation to position Lindee's timing belts as an upper conveyor assembly (Resp. 37–45) (*see* § V.B.1.m, *infra*), Patent Owner does not dispute that resulting structure constitutes an "upper conveyor assembly" as claimed.

We determine that Petitioner has shown that the combination of the 2006 904 Operating Manual and Lindee discloses limitation 1.6.

h) Limitation 1.7: Stop Gate

Limitation 1.7 recites "g) a food article stop gate disposed upstream of the slicing station forms a portion of the food article feed path."

Petitioner contends that "[t]he 2006 904 manual discloses a 'product bed conveyor' that is upstream of the slicing station as shown in Figure 227 below." Pet. 46 (citing Ex. 1005, 21; Ex. 1003 ¶¶ 135–136). Petitioner asserts that the "product bed conveyor" discloses the claimed "food article stop gate." *Id.* (citing Ex. 1003 ¶ 136).

Petitioner provides an annotated version of Figure 227 of the 2006 904 Operating Manual as shown below.

5.12.1 Product bed conveyor (product length up to 1200 mm)

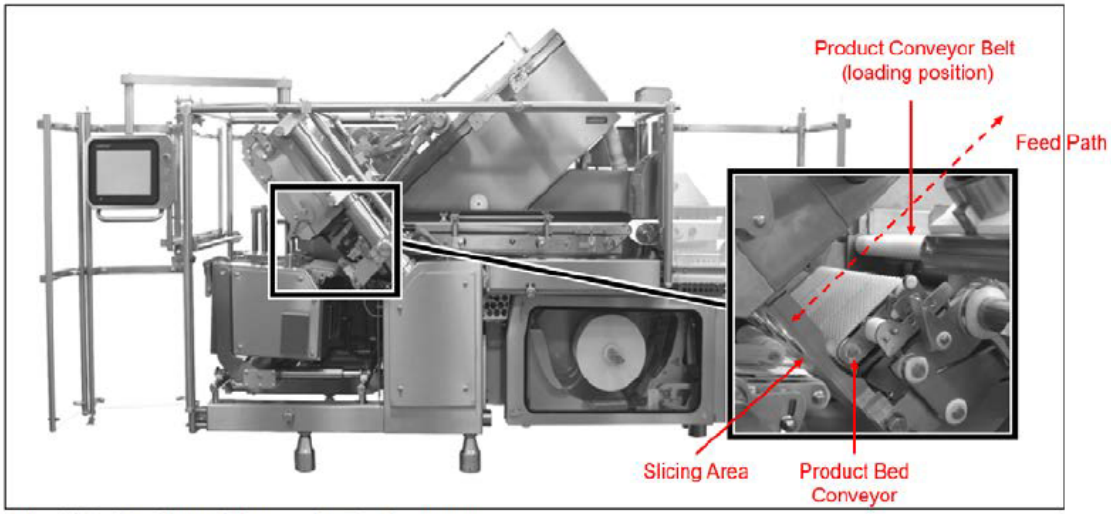

Fig. 227 Position of the product bed conveyor

In relation to Figure 227, Petitioner asserts that "[t]he product bed conveyor is a short, separate conveyor belt that pivots between two positions relative to its starting position parallel to the feed path." Pet. 47 (citing Ex. 1003 ¶ 137). Petitioner alleges that "[i]n the supporting position the product bed conveyor aligns with the floor of the feeding path to 'support[] the transport of the [food] product up to the shear bar' (as shown in Figure 227), thereby forming part of the floor of the feed path." *Id.* (citing Ex. 1005, 21, 40–41; Ex. 1003 ¶ 135).

Petitioner provides an annotated version of Figure 29 of the 2006 904 Operating Manual as shown below.

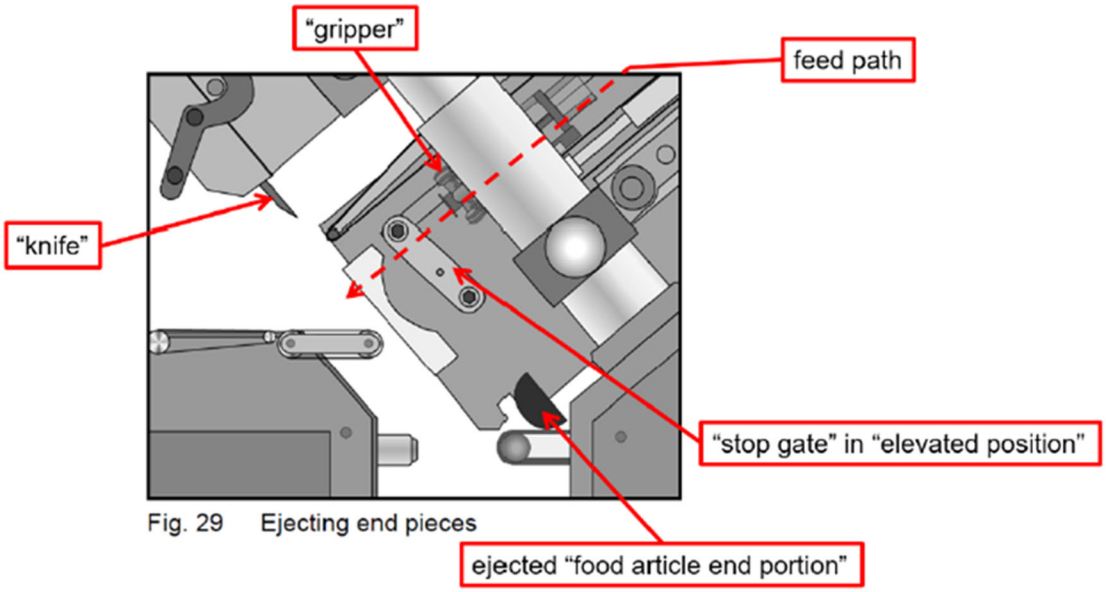

Fig. 29 Ejecting end pieces

Petitioner contends that Figure 29 shows that "[i]n a second position the product bed conveyor is pivoted such that it is approximately perpendicular to the floor of the feed path." Pet. 47 (citing Ex. 1005, 21, 40–41; Ex. 1003 ¶ 136).

Petitioner alleges that "[i]n addition to forming part of the floor of the feed path immediately upstream of the slicing blade, the product bed conveyor acts also can be positioned as 'a product limit stop [that] prevents the products from sliding into the outlet [beyond the slicing station] in an uncontrolled manner' when it is pivoted into a second, vertical position." Pet. 48 (citing Ex. 1005, 21; Ex. 1003 ¶ 136). Thus, Petitioner argues, "to the extent that the claimed 'food article stop gate' is construed to require that the stop gate element have a stopping functionality, the product bed conveyor discloses stopping the food products during the loading process to prevent the products from sliding into and beyond the slicing area." *Id.* (citing Ex. 1003 ¶ 136). Petitioner contends that "the 2006 904 manual also states that '[i]n order for all [food] products to be aligned flush with each other for the slicing operation, they are *pressed* against the product bed

conveyor . . .[t]o do this, the product bed conveyor is in a vertical position.'" *Id.* at 48–49 (citing Ex. 1005, 40). Thus, Petitioner argues that "the 2006 904 manual explicitly discloses using the product bed conveyor as a 'stop gate' as claimed by pressing the food products against the product bed conveyor and, therefore, stopping the food products from advancing." *Id.* at 49 (citing Ex. 1003 ¶ 136). Accordingly, Petitioner argues that the 2006 904 Operating Manual discloses limitation 1.7. *Id.* (citing Ex. 1003 ¶ 138).

Patent Owner does not dispute Petitioner's contentions for limitation 1.7.

We find that Petitioner has shown that the 2006 904 Operating Manual discloses limitation 1.7.

i) Limitation 1.8: Lift Tray Assembly

Limitation 1.8 recites "h) wherein the food article loading apparatus includes a lift tray assembly moveable between a staging position and an elevated position, said elevated position being a position wherein the food articles disposed within the lift tray assembly are in the food article feed path."

Petitioner contends that "the 2006 904 manual discloses several different structural elements that work together to form the claimed 'food article loading apparatus' that loads food product into the slicer." Pet. 49 (citing *id.* at § VI.A.3). Petitioner asserts that "[t]hese elements include the product conveyor, timing belt, and associated actuators and structures." *Id.*

Petitioner provides an annotated version of Figure 5 of the 2006 904 Operating Manual as shown below.

1.2.2 Operating position/loading position

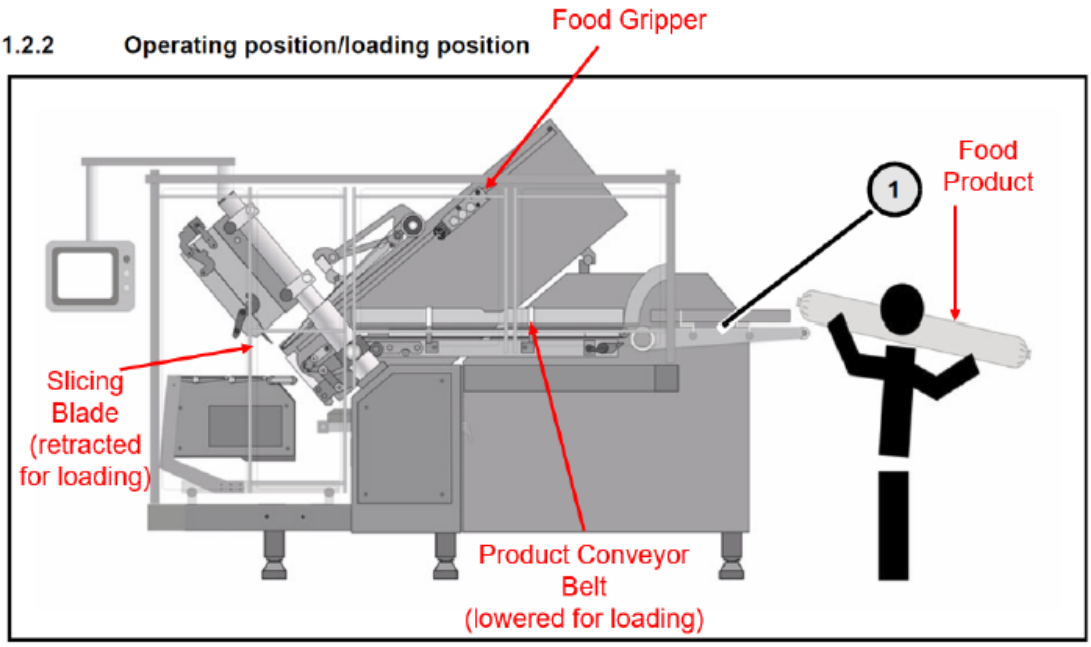

Fig. 5 Operating position/loading position

Pet. 50. In relation to Figure 5, Petitioner alleges that "[d]uring the loading process, the product conveyor belt (also called a "product conveyor") is lowered to a staging position to receive food articles from the timing belt." *Id.* at 49 (citing Ex. 1005, 39–40; Ex. 1003 ¶ 140).

Petitioner provides an annotated version of Figure 14 of the 2006 904 Operating Manual as shown below.

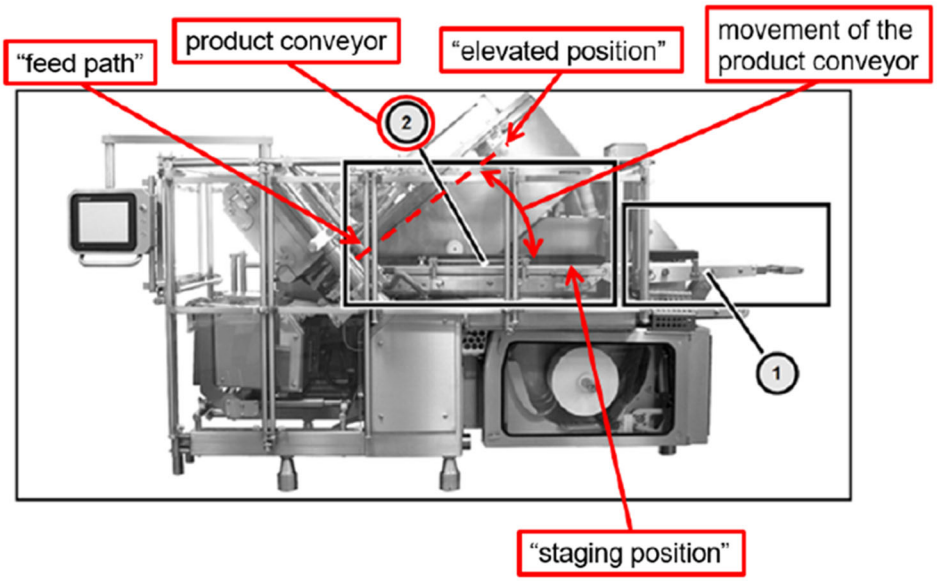

Pet. 51. In relation to Figure 14, Petitioner contends that "[a]fter food articles are loaded on the product conveyor belt by the timing belt, the food articles 'are lifted into the infeed position by the product conveyor belt.'" *Id.* at 50 (citing Ex. 1005, 40; Ex. 1005, 40; Ex. 1003 ¶¶ 141–142). Petitioner asserts that "Figure 14 . . . illustrates the motion of the product conveyor belt as it moves into the infeed position and places the food articles at the beginning of the food article feed path." *Id.* (citing Ex. 1003 ¶¶ 142–143).

Thus, according to Petitioner, "the product conveyor disclosed in the 2006 904 manual discloses the claimed 'lift tray assembly' because it moves between a loading (i.e., "staging") position and an upper (i.e., "elevated") position to load food into the feed path." *Id.* at 51 (citing Ex. 1003 ¶ 143). Petitioner contends that "[w]hen the product conveyor is lifted the food on it is in the article feed path" as shown in Figure 14. *Id.* Accordingly, Petitioner asserts that the 2006 904 Operating Manual discloses limitation 1.8. *Id.*

Patent Owner does not dispute Petitioner's contentions regarding limitation 1.8.

We find that Petitioner has shown that the 2006 904 Operating Manual discloses limitation 1.8.

j) Limitation 1.9: Stop Gate Supports When Lift Tray Assembly Moved from Elevated Position

Limitation 1.9 recites "i) the food articles are supported in position along the food article feed path by at least the food article stop gate when the lift tray assembly is moved from its elevated position."

The Federal Circuit held that limitation 1.9 is disclosed by Petitioner's evidence, including the 2006 904 Operating Manual. *Weber*, 92 F.4th at

1070–1072. Although the Federal Circuit's decision is dispositive for limitation 1.9, we provide Petitioner's contentions for this limitation below to provide context for Petitioner's and Patent Owner's contentions and disputes for other claim limitations as well as the motivation to combine and reasonable expectation of success. *See* §§ V.B.1.l–m, *infra*.

Petitioner contends that, "the product bed conveyor (i.e., the claimed 'stop gate') 'supports the transport of the [food] product up to the shear bar' by forming the floor of the feed path upstream of the slicer station." Pet. 51–52 (citing *id.* at § VI.A.5; Ex. 1005, 21, Fig. 10; Ex. 1003 ¶¶ 147–149). Petitioner asserts that "[t]his support occurs regardless of the position of the product conveyor (i.e., the claimed "lift tray assembly")." *Id.* at 52.

Petitioner further contends that "Sandberg resolves all doubt regarding whether the 'support' of the stop gate as claimed was known." Pet. 52. Petitioner asserts that "Sandberg discloses that it was known to load new food products while finishing slicing of the prior food product." *Id.* (citing Ex. 1012 ¶ 6; Ex. 1003 ¶ 151). According to Petitioner, Sandberg's "process is possible in food slicers with configurations like those of the 904 slicer and the '812 slicer." *Id.* (citing Ex. 1003 ¶ 151). Specifically, Petitioner alleges that "in these types of food slicers, food products are loaded upstream of the slicing station by using a food article loading apparatus that pivots from a lower position to an elevated position." Pet. 52 (citing *id.* at § VI.A.3; Ex. 1012, ¶¶ 134–137). Petitioner states that "[l]ike both the '812 patent slicer and the 2006 904 [Operating Manual] slicer, Sandberg discloses this simultaneous loading procedure with respect to a multi-lane slicer (i.e., a slicer that can slicer more than on food loaf at the same time). *Id.* (citing Ex. 1012 ¶ 17; Ex. 1003 ¶ 151). Petitioner argues that "[a] POSA would

have understood that this simultaneous loading improves food slicer efficiency by reducing the slicing idle time during reloading." *Id.* (citing Ex. 1003 ¶ 151). Accordingly, Petitioner asserts that the combination of the 2006 904 Operating Manual, Lindee, and Sandberg discloses limitation 1.9. *Id.* (citing Ex. 1003 ¶ 152).

Patent Owner argued during the trial that Petitioner's prior art combinations failed to disclose limitation 1.9. Resp. 50–57. The Federal Circuit held, however, that the evidence adduced at trial, including Figures 10 and 227 of the 2006 904 Operating Manual, and Petitioner's expert's testimony, established that limitation 1.9 is disclosed by the 2006 904 Operating Manual. *Weber*, 92 F.4th at 1070–1072.

k) Limitation 1.10: Stop Gate Serves as Door

Limitation 1.10 recites "wherein the food article stop gate also serves as a door for the removal of food article end portions."

Petitioner contends that "[t]he 2006 904 manual discloses the following process for ejection of the food article end pieces:"

> Ejection of the end pieces
> - The end pieces of the products are pulled back by the product holder
> - The product bed conveyor pivots into the ejection position.
> - The product holder lets the end pieces fall.

Pet. 53 (citing Ex. 1005, 40).

Petitioner provides an annotated version of Figure 29 of the 2006 904 Operating Manual as shown below.

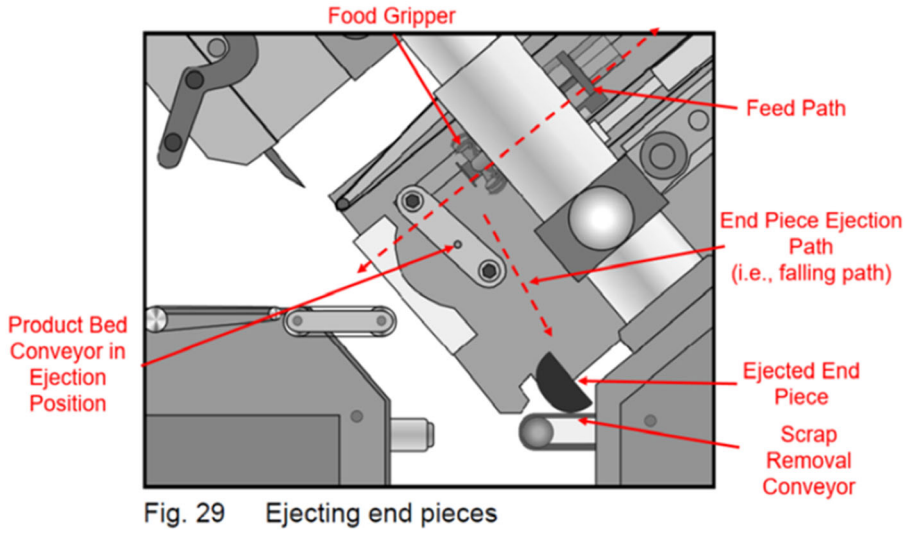

Pet. 54. Petitioner asserts that the annotated version of Figure 29 of the 2006 904 Operating Manual "shows an end piece having dropped through the gap created, at least in part, by the product bed conveyor pivoting open." *Id.* (citing Ex. 1003 ¶ 154). Petitioner argues that annotated version of Figure 29 shows that "[t]he black half disc food end piece is visible resting on the scrap disposal conveyor." *Id.*

Accordingly, Petitioner contends that the 2006 904 Operating Manual discloses limitation 1.10. Pet. 54 (citing Ex. 1003 ¶ 155).

Patent Owner does not dispute Petitioner's contentions for limitation 1.10.

We agree with Petitioner's contentions and find that the 2006 904 Operating Manual discloses limitation 1.10.

l) Motivation to Combine

Petitioner contends that a POSA "[s]tarting with the machine disclosed in the 2006 904 [Operating] Manual" "would have been motivated to obtain references that taught systems and methods for actuating food article grippers along feed paths of slicers." Pet. 54 (citing Ex. 1003 ¶ 156).

Petitioner asserts that a POSA would thus have been led to consider

Lindee's food slicer, which "uses a food gripper mechanism 151 to grip food products and advance the products down an inclined support surface to a slicing blade." Pet. 54 (citing *id.* at § VI.A.5; Ex. 1006, 8:65–9:45; Ex. 1003 ¶¶ 156–157).

Petitioner also contends that a POSA would have been motivated to use gripper actuation using mechanical details of Lindee's timing belt with the product holder of the 2006 904 Operating Manual to feed food loaves into the slicer using functionality that is "substantively identical." Pet. 54–55 (citing Ex. 1003 ¶ 160).

Petitioner further asserts that the 2006 904 Operating Manual and Lindee are from the "same field of technological invention (i.e., food slicers)" and disclose food slicers that are highly similar in how their grippers feed food product into their slicers. Pet. 55 (citing Ex. 1003 ¶ 159).

Petitioner also contends that its proposed modification "would have been a simple combination of known prior art elements (i.e., the timing belt actuation system of Lindee and the 2006 904 manual's product holder) to achieve predictable results (i.e., actuation of the product holder along the feed path)." Pet. 55–56 (citing Ex, 1003 ¶ 159; *KSR*, 550 U.S. at 401).

In addition, Petitioner contends that its proposed modification would have been the use of a known technique (Lindee's independently driven grippers) to improve a similar device (the 904 slicer's grippers). Pet. 56 (citing Ex. 1003 ¶ 158). Petitioner asserts that "Lindee discloses that its conveyor actuation system allows the feed rate of each conveyor belt (and corresponding gripper) to be different 'to adjust slice thickness for one loaf independently of the other'" which "provides the advantage of allowing for different slice thickness when slicing multiple food products." *Id.* (citing Ex. 1006, 9:18–21; Ex. 1003 ¶¶ 157–160; *KSR*, 550 U.S. at 417).

Moreover, Petitioner asserts that "a POSA would have been motivated to add Lindee's conveyor system to the upper portion of the 2006 904 [Operating Manual's] slicer" because that is where the track is that supports the product holder. Pet. 57 (citing Ex. 1006, Fig. 12; Ex. 1003 ¶ 160). Petitioner asserts that Lindee's conveyor belt would be located in the upper portion of the 904 slicer and thus would constitute an "upper" conveyor assembly as claimed. *Id.* (citing Ex. 1003 ¶ 160).

Petitioner alleges that the existing structure of the 904 slicer is capable of implementing Sandberg's "simultaneous loading procedure" in which a new food loaf is loaded while finishing the slicing of the old food loaf. Pet. 57 (citing Ex. 1003 ¶¶ 161–162). In this procedure, according to Petitioner, the 904 slicer's product bed conveyor (the claimed "stop gate") independently supports the old food loaf as its slicing is finishing while the lift tray lowers to receive a new food loaf for slicing. *Id.*

Petitioner provides an annotated version of Figure 5 of the 2006 904 Operating Manual as shown below.

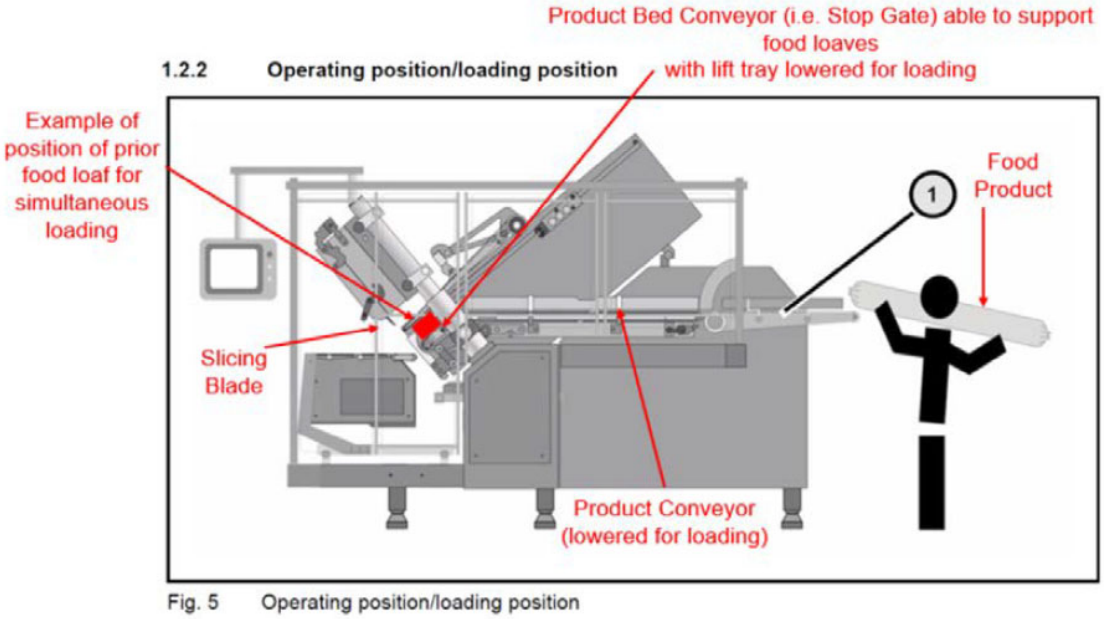

Pet. 58. As shown in the annotated version of Figure 5, Petitioner contends that "in the 904 slicer, the food loaves can be supported by the closed stop gate (i.e., the product bed conveyor) that is located just before the slicing blade when the new food loaf is being loaded into the 904 slicer via the timing belt and product conveyor." *Id.* at 57.

Petitioner contends that "[a] POSA would have been motivated to operate the 904 slicer using Sandberg's simultaneous loading method to improve slicing efficiency." Pet. 58 (citing Ex. 1003 ¶¶ 161–162). Petitioner argues that "[l]oading the new loaf while finishing slicing of the old loaf reduces slicing idle time caused by reloading the slicer." *Id.* Petitioner asserts that "[t]his modification of the operation of the 904 slicer would have been the improvement of a similar device (i.e., the 904 slicer) using a known method (Sandberg's simultaneous loading method)." *Id.* (citing *KSR*, 550 U.S. at 401).

Patent Owner argues that a POSA would not have been motivated to add Lindee's lower timing belt system to the alleged upper conveyor assembly of the 2006 904 Operating Manual. Resp. 37–45. Specifically, Patent Owner asserted that the 2006 904 Operating Manual already taught how to actuate the product holder grippers using a ball screw, and did not require Lindee's timing belt for actuation. *Id.* at 38–41.

However, Petitioner demonstrated that a POSA would have recognized that conveyor belts and ball screws were well known, interchangeable solutions for gripper actuation, and that using a belt drive system would reduce the possibility of contaminants through reduced lubrication requirements and improved cleanliness. Reply 10–11 (citing Ex. 1003 ¶ 160; Ex. 1062, 129:21–25; Ex. 1051 ¶¶ 50–54). Petitioner's evidence shows that a POSA considering these options would have selected

a belt drive system like Lindee's to actuate the grippers in at least some situations where risk of contamination and cleanliness were relevant concerns.

In addition to the foregoing motivation argument, Patent Owner argued in the trial that Petitioner's combination was not a "simple substitution" of Lindee's timing belt for the 2006 904 Operating Manual's ball screw. Resp. 42–45. Specifically, Patent Owner argued that Petitioner's "redesign would require a POSA to turn Lindee's timing belt system on its head and to work upside-down with the 904 Manuals." *Id.* at 42 (citing Ex. 2019 ¶ 117).

However, Petitioner argues that a POSA would have recognized that a belt-drive system's operation is not dependent on a specific orientation with respect to gravity, and asserts that the Petition does not suggest that Lindee's entire belt-drive system would need to be inverted when combined with the 904 slicer. Reply 12 (citing Ex. 1051 ¶¶ 60–62). Petitioner states that a POSA would add the grippers to the upper portion of the 2006 904 Operating Manual's slicer because that is the location of the track that supports the product holder. Pet. 57; Ex. 1003 ¶ 159; Ex. 1051 ¶ 61. Moreover, Petitioner points out that overhead belts were well known to be safe in the food industry, so a POSA would have been motivated to use them. Ex. 1051 ¶ 62. We agree with Petitioner's contentions.

Patent Owner next argues that during prosecution of a related patent application, Patent Owner stated that the use of conveyor belts provides a faster stroke allowing food articles to be processed faster. Resp. 42–43 (citing Ex. 2020, 7). Patent Owner argues that Petitioner "does not grapple with this intrinsic evidence or account for the engineering hurdles needed to realize such benefits." *Id.* (citing Ex. 2019 ¶¶ 117–124).

However, a POSA's motivation to combine need not be the same one that motivated the patentee, so a POSA need not have recognized that conveyor belts provide a faster stroke to support a motivation to combine. *See, e.g.*, *PAR Pharmaceutical, Inc. v. TWI Pharmaceuticals, Inc.*, 773 F.3d 1186, 1197 (Fed. Cir. 2014).

As to engineering, as already noted, Petitioner indicated that conveyor belts were known in the industry to be safe and interchangeable with ball screws, that Lindee's conveyor belt is used for the same purpose in Lindee as in the combination, and that using a known element for the same function in a similar device is obvious absent other complications, which Patent Owner did not identify. Reply 12–13; Ex. 1003 ¶ 160. Moreover, Petitioner asserts that Patent Owner did not explain how Lindee's belt-drive system would function differently in the 2006 904 Operating Manual's slicer. Reply 13 (citing Ex. 1051 ¶¶ 23, 43). Petitioner asserts that Patent Owner "ignores that the 904 Manuals already disclose an upper conveyor system—the upper product guide, as the Petition noted." *Id.* (citing Pet. 34–35). Petitioner's contentions are persuasive.

Patent Owner further asserts that positioning Lindee's timing belt above the food article feed path "would have unacceptably increased the risk of food contamination" because contaminants from the timing belt would fall toward the food articles. Resp. 44. Patent Owner contends that Petitioner recognized that disposing objects above a product feed path, as in Petitioner's proposed redesign can cause contamination of food product from "paper scraps, wood chips, metal parts such as screw parts, fluids or plastic residues." *Id.* (citing Ex. 2025 (U.S. Patent No. 10,227,182), 2:42–56). According to Patent Owner, "[a] POSA would have been acutely aware that for machine components located below the food article path, such

as in Lindee, gravity assists to keep contaminants out of the food path." *Id.* (citing Ex. 2019 ¶ 124). Thus, Patent Owner argues, "a POSA would have had a logical preference to locate a timing belt below the feed path, as in Lindee, and not above the feed path, as in the proposed combination." *Id.*

Petitioner asserts that Patent Owner's "allegations contradict prior art teachings and ignore advantages of belt drives over multiple independent ball screw" drives including "[r]educed lubrication requirements [and therefore] decreased maintenance time and improved [ ] cleanliness by allowing easier machine wash down, reducing possible lubrication contamination of the feed path." Reply 10 (citing Ex. 1003 ¶ 160; Ex. 1051 ¶¶ 50–54; Ex. 1062, 129:21–25). Petitioner argues that Patent Owner's expert, Dr. Howard, conceded that lubrication contamination would be reduced or eliminated through the use of belt drives. *Id.* at 10–11 (citing Ex. 2019 ¶ 117; Ex. 1062, 129:21–25). Considering Dr. Howard's testimony that some conveyor belts drives do not require external lubrication (Ex. 1062, 129:21–25), we agree with Petitioner that using such a conveyor belt above the food article feed path would not pose a significant risk of food contamination from lubricant. Patent Owner further argues that Petitioner is "substantively incorrect that a POSA would have been motivated to make its proposed 'simple substitution' to allow for 'different feed rates for each of the grippers.'" Resp. 45 (citing Pet. 56.). Patent Owner asserts that Petitioner's proposed substitution "would have a single timing belt of Lindee driving the three product holder grippers together as a unit (and not independently driven)." *Id.* (citing Ex. 2019 ¶¶ 118–119).

Petitioner asserts that Patent Owner mischaracterized Petitioner's proposed combination. Reply 11–12. Specifically, Petitioner asserts that the Petition stated that "[a] POSA would have been further motivated to modify

the 904 slicer to include Lindee's conveyor actuation *system* to allow for different feed rates for *each* of the grippers." Reply 11–12 (citing Pet. 56) (emphasis original). Petitioner states that Patent Owner acknowledged in its Response that "Lindee's conveyor actuation system discloses conveyor belts connected to each of its independently driven grippers." *Id.* at 12 (citing Pet. 56; Resp. 32–33).

Reviewing the Petition, we agree with Petitioner that Patent Owner mischaracterizes Petitioner's proposed combination, which provides separate timing belts of Lindee to drive each of the grippers. Pet. 56. Patent Owner's argument is not directed to the combination that Petitioner proposes, and is therefore unavailing.

Patent Owner argues that, in the prior FWD, we credited Dr. Howard's testimony that a POSA would not have combined the 2006 904 Operating Manual and Lindee because of a lack of any advantage in doing so. Paper 75, 2 (Patent Owner's Brief on Remand). Patent Owner further argues that Petitioner's expert provided three purported motivations: (1) the 2006 904 Operating Manual does not expressly disclose actuation; (2) the advantages of independently driven grippers; and (3) belt drives do not require lubrication or exhibit backlash. *Id.* at 1 (citing Ex. 1003 ¶¶ 156–160). Patent Owner contends that we rejected these motivations in the FWD. *Id.* at 2–4.

We do not agree with Patent Owner's assertions. The prior FWD focused primarily on whether the 2006 904 Operating Manual and the 2010 904 Operating Manual could be considered "printed publications" under § 311(b), and the construction of the "disposed over" and "stop gate" limitations and whether they were disclosed in the prior art combinations. *See* FWD §§ III-V. Petitioner's motivations to combine the 2006 904

Operating Manual and 2010 904 Operating Manual with Lindee were, at most, ancillary to these issues.

Furthermore, since the Federal Circuit acknowledged that Petitioner's obviousness assertions were based on the combination of the 2006 904 Operating Manual with Lindee, and the 2010 904 Operating Manual with Lindee, and the Federal Circuit held that the "asserted prior art" discloses the "disposed over" limitation, it may be, as Petitioner seems to argue, that the Federal Circuit's decision carries with it the determination that there was a motivation to use Lindee's timing belt conveyor in the 2006 904 Operating Manual's food slicer to drive the product holder and its grippers. Paper 73, 1 (Petitioner's Brief on Remand); *Weber*, 92 F.4th at 1065, 1069–1070. For completeness, however, we provide below our analysis determining that Petitioner has provided the necessary motivation to combine Lindee's timing belt driven grippers with the 2006 904 Operating Manual's food slicer.

In light of the Federal Circuit's decision, we agree with Petitioner that the structure and function of the 2006 904 Operating Manual's product holder and Lindee's grippers are similar in that they serve to grip food product and guide it to the slicing station. *See, e.g.*, Ex. 1005, 23; Ex. 1006, 18:20–35, Fig. 7A. The two devices differ in their actuation—the 2006 904 Operating Manual uses a ball screw spindle actuator to drive the product holder along the feed path, whereas Lindee uses a timing belt 334 to drive its grippers 151 along the feed path. Ex. 1005, 273–274; Ex. 1006, 18:33–34, Fig. 7A. However, Petitioner presented evidence that "unlike ball screws, belt drives do not require periodic lubrication with grease or exhibit backlash when they change direction." Ex. 1003 ¶ 160. In addition, Petitioner demonstrates that a POSA at the time would have understood that conveyor

belts like Lindee's can be easily cleaned. Ex. 1051 ¶¶ 50–54. Petitioner further asserted that conveyor belts are easy to maintain at low cost. *Id.* citing ¶¶ 55–58.

We agree with Petitioner that, at least for some scenarios, including those that Petitioner specifies, a POSA would have seen that there were advantages to using Lindee's timing belt rather than the 2006 904 Operating Manual's ball-screw to drive food article grippers. Petitioner has demonstrated a POSA would have been motivated to combine Lindee's belt-driven grippers in the 2006 904 Operating Manual's food slicer notwithstanding Patent Owner's arguments to the contrary.

Accordingly, Petitioner has shown that a POSA would have been motivated to combine the 2006 904 Operating Manual, Lindee, and Sandberg notwithstanding Patent Owner's arguments to the contrary.

m) Reasonable Expectation of Success

Petitioner asserts that a POSA would have had a reasonable expectation of success modifying the 2006 904 Operating Manual's slicer to include Lindee's conveyor belt system for multiple reasons. Pet. 59–60 (citing Ex. 1003 ¶¶ 164–165). First, Petitioner contends that Lindee's conveyor belt system serves the same purpose (linear actuation of the food gripper) in a structurally similar device (food slicer) as the conveyor belt of the 904 slicer disclosed in the 2006 904 Operating Manual. *Id.* at 59 (citing Ex. 1003 ¶ 165). Second, Petitioner asserts that the 2006 904 Operating Manual's "food gripper (i.e., the product holder) is actuated using a linear actuator that is built into the structure of the upper portion of the 904 slicer, which has both the structure and space for a POSA to implement the conveyor belt actuation system." *Id.* (citing Ex. 1006, Fig. 12; Ex. 1003 ¶ 165). Third, Petitioner contends that "designing and implementing a

straightforward, predictable mechanical system like Lindee's conveyor belt actuation was well within the skills of a POSA in the relevant time period." *Id.* (citing Ex. 1003 ¶ 165). Petitioner asserts that "a POSA would have had a reasonable expectation of success adding Lindee's conveyor system to the 2006 904 manual's slicer." *Id.* (citing Ex. 1003 ¶ 168).

Petitioner further argues that "there are no structural modifications needed to operate the 904 slicer per Sandberg's simultaneous loading method." Pet. 60 (citing § VI.A.10; Ex. 1003 ¶¶ 166–167). Petitioner asserts that "the only modification needed is a minor change in operational procedure" which "would have been well within the skills of a POSA (and, indeed, even a machine operator) at the relevant time." *Id.*

Patent argues that "the Petitioner does not address why a POSA would expect success in changing the basic operation and function of the 904 slicer by including multiple timing belts and independently-driven food grippers." Paper 75, 5 (citing Pet. 59–60) (Patent Owner's Brief on Remand).

We do not agree with Patent Owner's assertion. Petitioner provided evidence that conveyor belts such as Lindee's timing belts were interchangeable with ball screw drives, that the 904 slicer has space to fit Lindee's timing belts in its upper portion, and that a POSA had the skill and ability to make the substitution. Pet. 59–60 (citing Ex. 1003 ¶¶ 164–167; Ex. 1006, Fig. 12). Petitioner further supplied evidence that Lindee disclosed the mechanical details that would have been needed by a POSA to add Lindee's timing belts to the 904 slicer and would have required no change in functionality. Pet. 54 (citing Ex. 1003 ¶ 160), 56 (citing Ex. 1003 ¶ 159). Furthermore, Petitioner has shown that adding Sandberg's simultaneous loading to the 904 slicer would not have required any structural modifications, but only "a minor change [to the] operational

procedure." Pet. 60 (citing Ex. 1003 ¶¶ 166–167). Accordingly, Patent Owner's argument is unavailing.

We determine that Petitioner has shown that a POSA would have had a reasonable expectation of success in combining Lindee's conveyor belt with the 904 slicer disclosed in the 2006 904 Operating Manual using Sandberg's simultaneous loading for the reasons that Petitioner presents.

n) Conclusion for Claim 1

Petitioner has shown that a POSA would have been motivated to combine the 2006 904 Operating Manual, Lindee, and Sandberg with a reasonable expectation of success in making the combination, and that each limitation of claim 1 is disclosed by the combination notwithstanding Patent Owner's arguments to the contrary. Accordingly, we determine that Petitioner has shown by a preponderance of the evidence that claim 1 is unpatentable because it would have been obvious over the combination of the 2006 904 Operating Manual, Lindee, and Sandberg.

2. Claim 2

Claim 2 depends from claim 1 and recites "wherein the food article feed path comprise lanes within a lift tray."

Petitioner contends that the 2006 904 Operating Manual discloses separation bars that are placed on the product conveyor to guide products during transport to the slicing area. Pet. 60 (citing Ex. 1005, 129, 142; Ex1003 ¶ 171).

Petitioner reproduces Figure 140 of the 2006 904 Operating Manual as shown below.

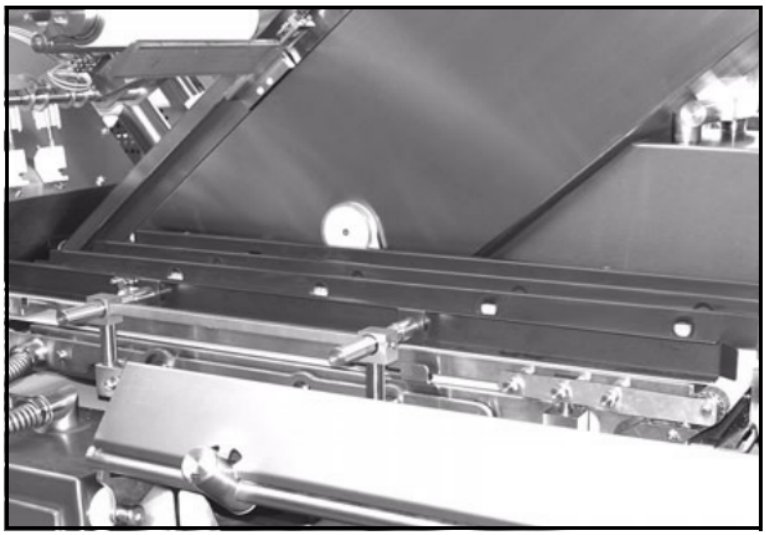

Fig. 140 Centre separation bars

Pet. 61. As shown in Figure 140, Petitioner asserts that a POSA would have understood that the bars physically separate three food article feed paths. *Id.* at 60–61 (citing Ex. 1003 ¶ 171). Petitioner contends that a POSA would have had a reasonable expectation of success in using the separation bars because they are described and shown in use in the 2006 904 Operating Manual. *Id.* (citing Ex. 1003 ¶ 173). Petitioner thus asserts that the 2006 904 Operating Manual renders obvious claim 2. *Id.* (citing Ex. 1003 ¶ 174).

Patent Owner does not provide any arguments specific to claim 2.

` We determine that Petitioner's evidence shows by a preponderance of the evidence that claim 2 would have been obvious over the combination of the 2006 904 Operating Manual, Lindee, and Sandberg.

3. Claim 3

Claim 3 depends from claim 1 and recites "wherein the food article feed path feeds the food article between a front lower conveyor and an upper presser plate upstream of the slicing station."

Referring to the 2006 904 Operating Manual, Petitioner contends that the upper product guide is disposed above the feed path and is used to press

down on food product from above to facilitate even transport to the slicing area. Pet. 62 (citing Ex. 1005, 17). Petitioner asserts that the upper product guide is disposed above the product conveyor ("feed apparatus") and product bed conveyor ("stop gate"), both of which disclose the claimed "front lower conveyor" because they are lower conveyor belts. *Id.* (citing Ex. 1003 ¶¶ 177–178).

Petitioner contends that the 2006 904 Operating Manual discloses that the upper product guide may be used with or without a conveyor belt to press down on the food product. Pet. 62 (citing Ex. 1005, 17). Petitioner states that the 2005 904 Operating Manual "explains that in 'the version without rotary conveyor belts, the support frame serves as a blank holder and only presses the products on to the product conveyor from above without moving them on [using a conveyor belt].'" *Id.* (citing Ex. 1005, 22; Ex. 1003 ¶ 177).

Petitioner provides Figure 11 of the 2006 904 Operating Manual as shown below.

1.6.3 Upper product guide

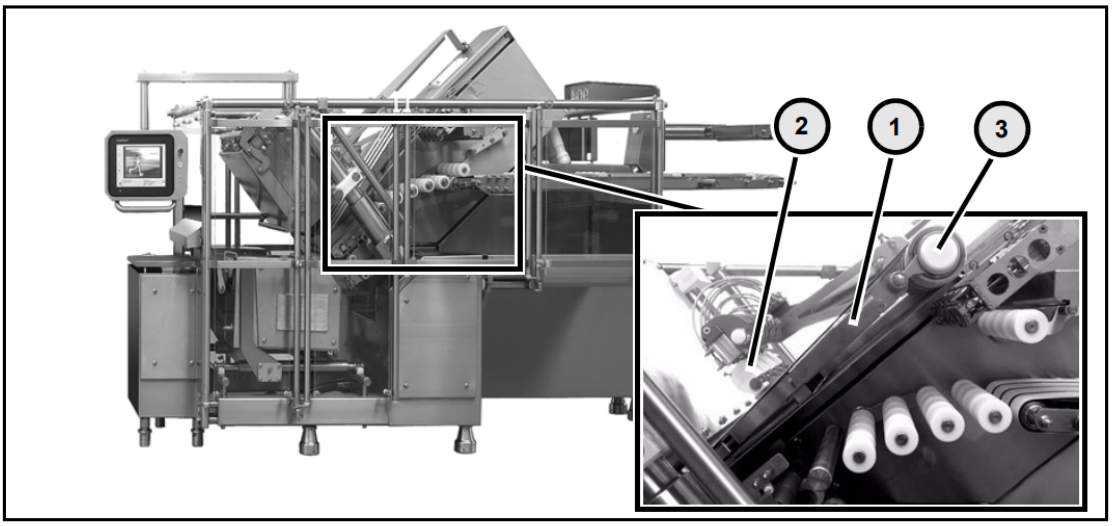

Fig. 11 Position of the "upper product guide" on the Slicer

According to Petitioner, Figure 11 shows the support frame as element (1) which discloses the claimed "upper presser plate" because "it is a structure feature that presses down on the food product from above. *Id.* (citing Ex. 1003 ¶ 178).

Patent Owner does not dispute Petitioner's contentions concerning claim 3.

We find that Petitioner has shown that the feature of claim 3 is disclosed by the 2006 904 Operating Manual. We further determine that Petitioner has shown by a preponderance of the evidence that claim 3 would have been obvious over the combination of the 2006 904 Operating Manual, Lindee, and Sandberg.

4. Claim 4

Claim 4 depends from claim 3 and recites "wherein the lower conveyor pivots between a first position which decreases a distance between the upper presser plate and the lower conveyor, and a second position which increases the distance between the upper presser plate and the lower conveyor."

To explain its contentions for claim 4, Petitioner provides an annotated version of Figure 14 of the 2006 904 Operating Manual as shown below.

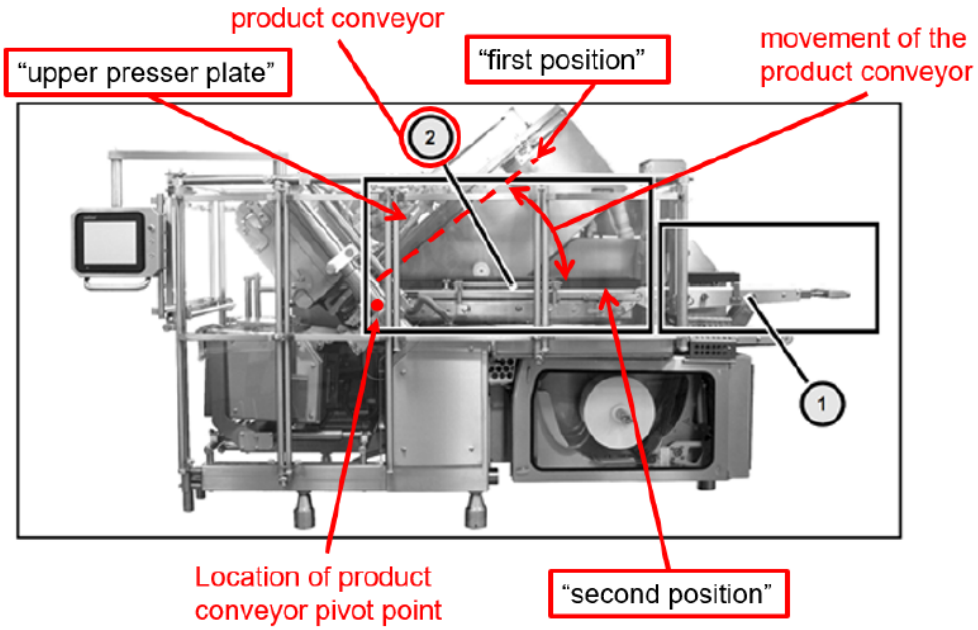

Pet. 64. As shown in Petitioner's annotated version of Figure 14 of the 2006 904 Operating Manual, the product conveyor (the claimed "lower conveyor") pivots between a loading position ("first position") and an upper position ("second position"). Pet. 64 (citing *id.* at § VI.A.3; Ex. 1005, 40, Fig. 29; Ex. 1003 ¶¶ 183–185).

Petitioner contends that, as shown in the annotated version of Figure 14, the product conveyor ("lower conveyor") is closer to the upper product guide ("presser plate") in the first position than in the second position. *Id.* at 65 (citing Ex. 1003 ¶ 183).

Petitioner contends that a POSA would have recognized that the 2006 904 Operating Manual discloses claim 4, and would have had a reasonable expectation of success in implementing this feature as disclosed. *Id.* (citing Ex. 1003 ¶ 185).

Petitioner thus asserts that the 2006 904 Operating Manual "discloses, or at least renders obvious, claim 4." *Id.* (citing Ex. 1003 ¶ 186).

Petitioner has shown by a preponderance of the evidence that claim 4 would have been obvious over the combination of the 2006 904 Operating Manual, Lindee, and Sandberg.

5. Claim 5

Claim 5 depends from claim 1 and recites "wherein each independently driven endless conveyor belt is wrapped around a drive roller; the drive roller having a toothed outer diameter for engaging with the endless conveyor belt and a toothed recessed diameter for engaging with a drive belt."

Petitioner contends that a POSA would have used Lindee's conveyor drive gripper actuation system in the 904 slicer, including its motors and corresponding structure which drives the conveyor belts. Pet. 66 (citing *id.* at § VI.A.12; Ex. 1003 ¶¶ 189–190). Petitioner asserts that Lindee discloses that timing belt 334 engages an idler sprocket 335 and drive sprocket 180, and thus each of the timing belts ("conveyor belts") is wrapped around a drive roller (drive sprocket 180). *Id.* (citing Ex. 1006, 18:35–38, Fig. 7A).

Petitioner reproduces Lindee's Figure 7B as shown below.

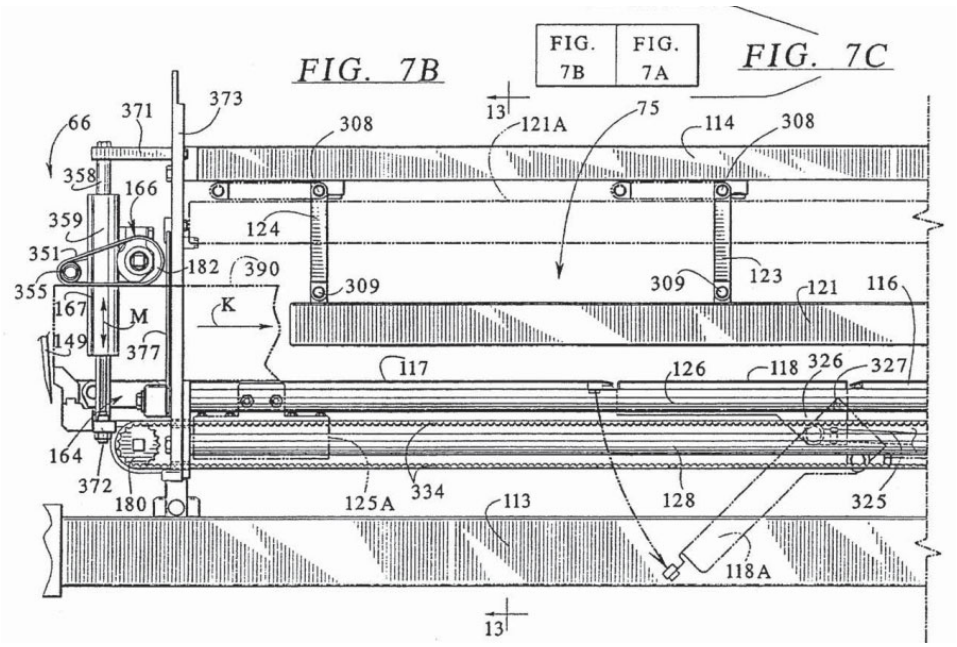

Pet. 66. Petitioner contends that, as shown in Lindee's Figure 7B, the outer diameter of drive sprocket 180 is toothed to engage and drive the timing belt 334. *Id.* (citing Ex. 1003 ¶ 190). Petitioner contends that drive sprocket 180 is part of the loaf feed drive mechanism and is driven by motor 174 through a series of timing belts 177, universal-joint connectors 178, and drive pulleys 180–182. *Id.* (citing Ex. 1006, 8:50–59, 8:65–9:1; Ex. 1003 ¶ 190).

Petitioner provides an annotated version of Lindee's Figure 4 as shown below.

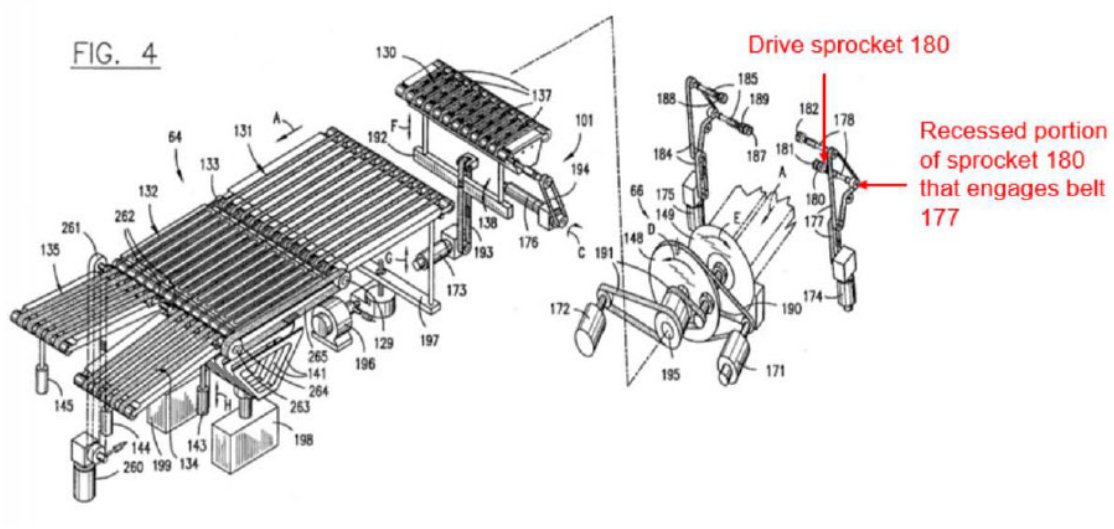

Petitioner contends that Lindee's Figure 4 shows that timing "belt 177 engages a recessed portion of sprocket 180 to drive pulley 180." *Id.*

Petitioner argues that "[a] POSA would have understood that the engagement between pulley 180 and belt 177 (i.e., the recessed portion identified above) is a toothed engagement because this type of engagement minimizes slippage of belt 177 on pulley 180 and thus maximizes drive efficiency." *Id.* (citing Ex. 1003 ¶ 191). Petitioner further states that "[c]ontrol of slippage is especially relevant in a food slicer, where components can be contaminated with fluids and oils from the food cutting process." *Id.* (citing Ex. 1003 ¶ 191). Furthermore, Petitioner asserts that

"reducing slippage increases the level of control that the motor has over the conveyor belt, which is important for precis[e] control of the feed rate and location of the grippers driven by the conveyor belts." *Id.* at 67–68. Petitioner argues that "[a] POSA would have had a reasonable expectation of success implementing a toothed engagement between belt 177 and pulley 180 because this type of interface is a simple mechanical design well within the skills of a POSA." *Id.* at 58 (citing Ex. 1003 ¶ 92). Accordingly, Petitioner asserts that the combination of the 2006 904 Operating Manual and Lindee renders claim 5 obvious. *Id.* (citing Ex. 1003 ¶ 193).

Patent Owner argues that Petitioner's proposed combination does not include a drive roller with a recessed diameter for engaging with the drive belt as claimed. Resp. 58–60. Specifically, Patent Owner contends that Lindee's Figure 4 does not show a recessed portion of sprocket 180. *Id.* at 59 (citing Ex. 2019 ¶¶ 161–164). Patent Owner further alleges that "a POSA would have understood that the supposed 'sprocket 180' would have been the same diameter as the drive sprocket 180" and that "[t]he sprockets are on the ends of universal-joint drive connectors, which are not used for speed changes or gear ratio differences." *Id.* (citing Ex. 1003 ¶ 165). Patent Owner argues that "[t]here is no description in Lindee about an outer or recessed portion of sprocket 180." *Id.* (citing Ex. 1006, 8:65–9:10).

Patent Owner further argues that even if a POSA assumed that Petitioner's "mislabeling is correct, Lindee requires that the sprocket Weber labels as 180 to be the same size as sprockets 180–182 because '[a]ll of the loaf feed drive pulleys 180–182 have the same peripheral speed.'" Resp. 59–60 (citing Ex. 2019 ¶ 166; Ex. 1006, 9:7–8). Patent Owner asserts that Petitioner "cites no evidence based expert testimony here, nor does it

make any argument that it would have been obvious to modify Lindee to have the claimed recessed diameter." *Id.* at 60.

Patent Owner further contends that the claimed "recessed diameter for engaging with a drive belt" provides the advantage of reducing the size and footprint of the drive belt and upper conveyor because the drive belt operates concentrically with the upper conveyor and is not required to be to the side of the upper conveyor as in Petitioner's proposed combination. *Id.* (citing Ex. 1001, Fig. 2; Ex. 2019 ¶¶ 167–171).

Patent Owner provides an annotated version of Figure 2 to explain its contentions concerning claim 5.

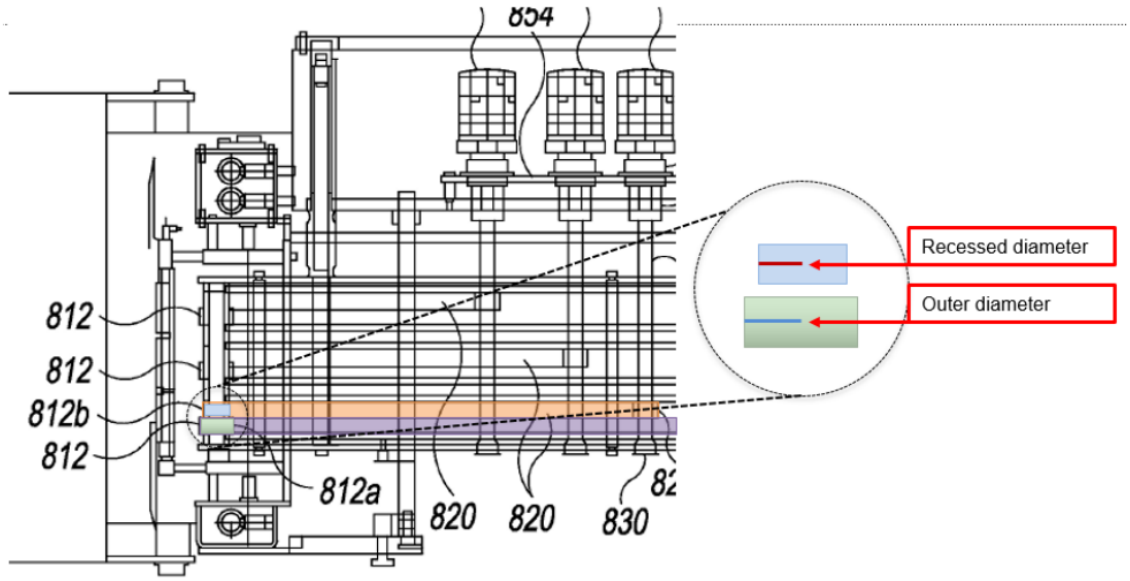

Sur-Reply 25. Patent Owner shows what it considers to be the outer diameter and recessed diameter in its annotated version of Figure 2 of the '812 patent. Figure 2 shows that drive sprockets 812 have a toothed outer diameter 812a that engages conveyor belts 802, 804, 806, and a recessed inner diameter 812b that engages with drive belts 820 driven by servomotors 850. Ex. 1001, 5:55–6:30.

In its Reply, Petitioner provided the following annotated excerpt of Lindee's Figure 7B to explain what it understands to be the claimed outer diameter and recessed diameter of the sprocket.

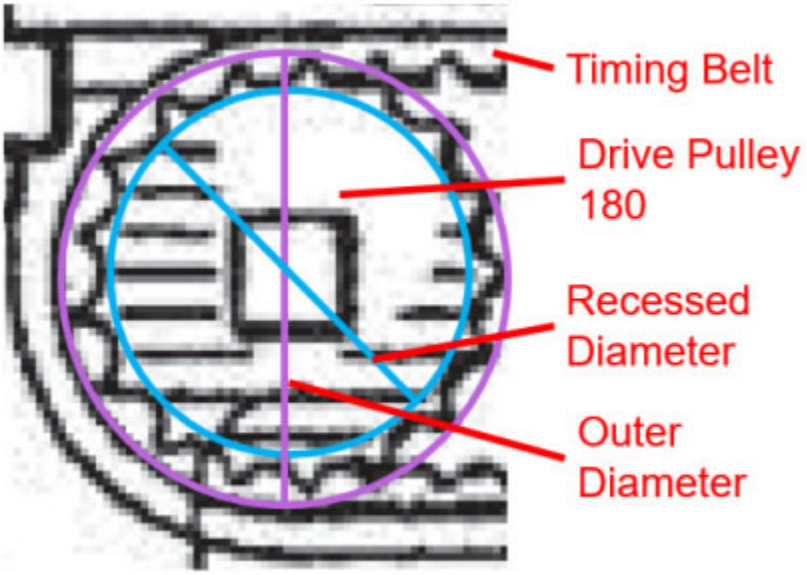

Reply 30. As shown in the annotated excerpt of Lindee's Figure 7B, Petitioner contends that the tips of the teeth of the sprocket define the sprocket's outer diameter, and the low points in the valleys between teeth define the inner diameter. *Id.* at 29–30.

Petitioner did not provide this explanation with its Petition. In any case, Petitioner does not explain why a POSA would have considered the claim language to refer only to the sprocket teeth (not valleys) engaging with the conveyor belt, and only the sprocket valleys (not teeth) engaging with the drive belt. As Patent Owner contends, Petitioner's explanation would "improperly render much of the language of claim 5 superfluous and meaningless" and "ignores the plain language of the claim." Sur-Reply 25 (citing Ex. 2019 ¶¶ 167–171). Referring to Petitioner's annotated version of Lindee's Figure 4 above, we discern no difference in diameter between what Petitioner refers to as the "drive sprocket 180" and the "recessed portion of

sprocket 180 that engages belt 177," nor does Lindee mention that its drive sprocket has different toothed diameters.

Petitioner argues that "relative limitations of this type" are a simple matter of design choice absent any criticality. Reply 32 (citing Ex. 1051 ¶¶ 102–104; *Uber Techs., Inc. v. X One, Inc.,* 957 F.3d 1334, 1341 (Fed. Cir. 2020)). However, the case that Petitioner relies upon addresses a design choice between whether a server side or terminal side plots user locations on a map. We do not see how the situation at issue here involves a design choice since the claim requires a drive roller with *both* an outer diameter and a recessed diameter—rather than a choice between the two. Thus, the case that Petitioner cites is inapposite to the situation here.

For the reasons stated above, we conclude that Petitioner does not show by a preponderance of the evidence that claim 5 would have been obvious over the combination of the 2006 904 Operating Manual, Lindee, and Sandberg.

6. Claim 8

Claim 8 depends from claim 1 and recites "wherein each independently driven endless conveyor belt can be timed to move food articles towards the slicing station at the same rate."

Petitioner contends that each conveyor belt in the modified 904 slicer is independently driven by a servomotor. Pet. 69 (citing Ex. 1003 ¶ 196). Petitioner argues that "[e]ach motor is capable of driving the conveyor belt at various desired rates, which a POSA would have understood to include driving the motors at the same rates." Pet. 69 (citing Ex. 1006, 2:28–30; Ex. 1003 ¶ 197). Petitioner asserts that "the conveyors and their drive systems are duplicates of each other and thus would use the same motors capable of the same feed rates." *Id.* Petitioner argues that "the modified 904

slicer is capable of driving each conveyor belt at the same rate." *Id.* Accordingly, Petitioner contends that the modified 904 slicer discloses claim 8.

Petitioner further contends that it would have been obvious to operate the conveyor belts at the same rate when slicing the same type of food product, and because there are only two choices: to operate the conveyors at the same rate or to operate them at different rates. Pet. 69 (citing Ex. 1003 ¶ 197). Petitioner contends that a POSA would have had a reasonable expectation of success because operating the conveyors at the same rate is a simple modification of operational parameters. *Id.* at 69–70 (citing Ex. 1003 ¶ 198). Accordingly, Petitioner asserts that the combination of the 2006 904 Operating Manual, Lindee, and Sandberg renders claim 8 obvious.

Patent Owner does not provide any arguments specific to claim 8.

We determine that Petitioner has shown that claim 8 would have been obvious over the combination of the 2006 904 Operating Manual, Lindee, and Sandberg.

7. Claim 9

Claim 9 depends from claim 1 and recites "wherein movement of each conveyor belt is in a plane parallel to the food article feed path."

Petitioner provides an annotated version of Figure 12 of the 2006 904 Operating Manual as shown below.

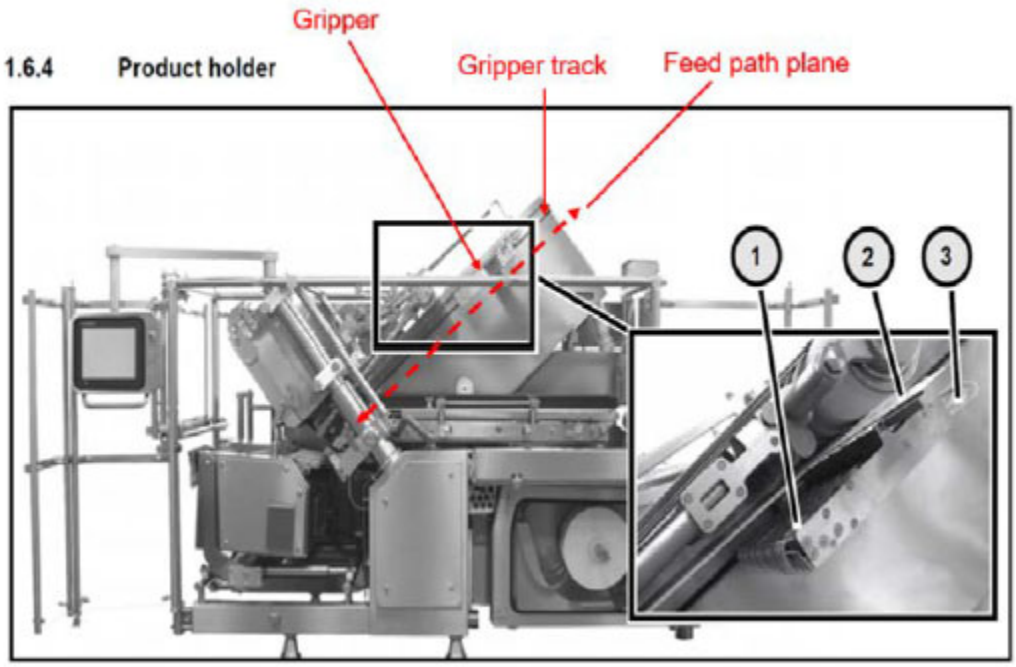

Fig. 12 Position of the product holder on the Slicer

In Petitioner's annotated version of Figure 12 of the 2006 904 Operating Manual, Petitioner contends that the grippers in the 904 slicer move in a plan parallel to the feed path. Pet. 70 (citing Ex. 1003 ¶ 202). Petitioner asserts that "[b]ecause the grippers are mechanically connected to and driven by the conveyor belts," "the conveyor belts must also move in the plane parallel to the feed path." Pet. 70 (citing *id.* at § VI.A.6; Ex. 1003 ¶ 203). Petitioner asserts that the combination of the 2006 904 Operating Manual, Lindee, and Sandberg renders claim 9 obvious. *Id.* (citing Ex. 1003 ¶¶ 204–206).

Patent Owner does not provide any arguments specific to claim 9.

We determine that Petitioner has shown by a preponderance of the evidence that claim 9 would have been obvious over the combination of the 2006 904 Operating Manual, Lindee, and Sandberg.

8. Claim 10

Claim 10 depends from claim 1 and recites "wherein a plane defined by a surface of each conveyer belt is parallel to the food article feed path."

As shown in Petitioner's annotated Figure 12 of the 2006 904 Operating Manual shown in § V.B.7, *supra*, Petitioner contends that "the grippers move in a plane parallel to the feed path plane" which "means that the conveyors also move in a path parallel to the plane." Pet. 71 (citing *id.* at § VI.A.6; Ex. 1003 ¶¶ 210–211).

Petitioner asserts that "a POSA would have been motivated to use Lindee's mechanical connection to connect the conveyors to the 904 slicer's grippers." Pet. 71 (citing Ex. 1003 ¶ 213). Petitioner provides an annotated version of Lindee's Figure 7A as shown below.

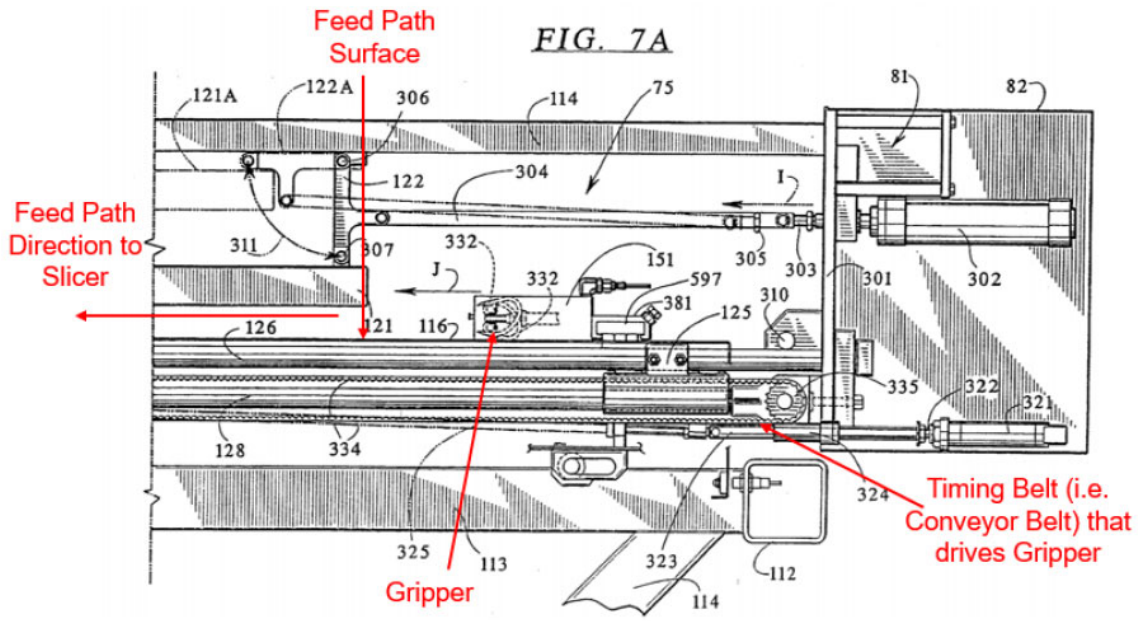

In Petitioner's annotated version of Lindee's Figure 7A, Petitioner argues that "Lindee's mechanical connection orients the conveyor plane (which extends in/out of the image) to be parallel with the surface that the gripper is traveling on." Pet. 71–72 (citing Ex. 1003 ¶ 213). According to Petitioner, "[i]n the modified 904 slicer, the conveyors in Lindee would be oriented in the same manner except for being inverted because the 904 grippers are mounted above the feed path." *Id.* at 72 (citing Ex. 1003 ¶ 213). Thus, Petitioner argues that "it would have been obvious that the conveyor plane

and the feed path plane were parallel." *Id.* (citing Ex. 1003 ¶ 213). Accordingly, Petitioner asserts that the combination of the 2006 904 Operating Manual, Lindee, and Sandberg renders claim 10 obvious. *Id.* (citing Ex. 1003 ¶ 214).

Patent Owner does not provide any arguments specific to claim 10.

We determine that Petitioner has shown by a preponderance of the evidence that claim 10 would have been obvious over the combination of the 2006 904 Operating Manual, Lindee, and Sandberg.

9. Claim 11

Claim 11 depends from claim 1 and recites "wherein the lift tray assembly pivots between the staging position and the elevated position."

Petitioner contends that "the product conveyor (i.e., the claimed "lower conveyor") lifts between a loading position (i.e., the claimed "staging position") and an upper position (i.e., the claimed "elevated position")." Pet. 72–73 (citing *id.* at § VI.A.3; Ex. 1003 ¶ 218).

Petitioner provides an annotated version of Figure 14 of the 2006 904 Operating Manual as shown below.

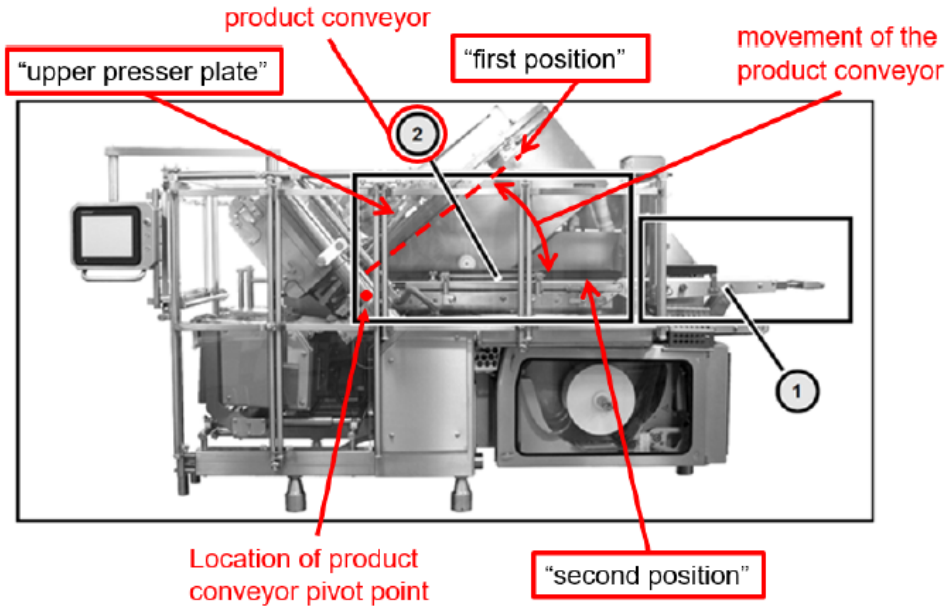

As shown in the annotated version of Figure 14, Petitioner contends that "a POSA would have understood, or at least found it suggested, that the product conveyor is pivoting upwards from the staging position to the elevated position." Pet. 73 (citing Ex. 1003 ¶ 218). Petitioner contends that the 2006 904 Operating Manual identifies the product conveyor as a pivoting component. *Id.* (citing Ex. 1005, 45; Ex. 1003 ¶ 218). Petitioner further asserts that "the sloped orientation of the product conveyor in the upper (i.e., first) position shown in other illustrations is most easily achieved with a pivoting connection at the end of the product conveyor closest to the slicing blade." *Id.* at 73–74 (citing Ex. 1005, 40, Fig. 29). Accordingly, Petitioner asserts that "the 2006 904 Operating Manual discloses, or at least renders obvious, claim 11." *Id.* at 74 (citing Ex. 1003 ¶¶ 220–221).

Patent Owner does not dispute Petitioner's contentions concerning claim 11.

Petitioner has shown by a preponderance of the evidence that claim 11 would have been obvious over the combination of the 2006 904 Operating Manual, Lindee, and Sandberg.

C. Ground 2: Obviousness of Claims 6 and 7 based on the Combination of the 2006 904 Operating Manual, Lindee, Sandberg, and Mathues

Claim 6 depends from claim 5, which depends from claim 1. Claim 7 depends from claim 6 of the '812 Patent.

We determined that Petitioner has not shown by a preponderance of the evidence that claim 5 would have been obvious over the combination of the 2006 904 Operating Manual, Lindee, and Sandberg. *See* § V.B.5, *supra*. Petitioner does not rely on Mathues to disclose the limitation of claim 5 noted as missing from the combination of the 2006 904 Operating Manual,

Lindee, and Sandberg. *Id.* Accordingly, Petitioner likewise does not show by a preponderance of the evidence that claim 6 or claim 7 would have been obvious over the combination of the 2006 904 Operating Manual, Lindee, Sandberg, and Mathues due to their dependency from claim 5.

D. Ground 3: Obviousness of Claims 1–5 and 8–11 Based on the 2010 904 Operating Manual, Lindee, and Sandberg

Petitioner asserts that the "2010 904 [Operating Manual] is substantively identical to the 2006 904 [Operating Manual]" except that it adds detail related to the upper product guide that has separate conveyors and drives to permit the conveyors to be independently driven at different speeds. *See* Pet. 78, 80 (citing Ex. 1009, 166). Consequently, Petitioner's reliance on the 2010 904 Operating Manual in this ground is substantively the same as Petitioner's use of the 2006 904 Operating Manual discussed in the first ground discussed in Section V.B, except with respect to motivation to combine. *See, e.g.*, *id.* at 79–85 (referring back to ground based on the 2006 904 Operating Manual to explain how the 2010 904 Operating Manual discloses the limitations of claim 1). As to motivation to combine, Petitioner argues that the individual product guide conveyors of the 2010 904 Operating Manual provide additional motivation to incorporate Lindee's independent gripper conveyor drives. *Id.* at 82–84 (citing Ex. 1006, 9:18–22; Ex. 1003 ¶ 279).

Since the 2010 904 Operating Manual in ground 3 has the same disclosure that Petitioner relied on for ground 1, we determine that, for the reasons discussed above, the Petition establishes by a preponderance of the evidence that claims 1–4 and 8–11, are unpatentable as obvious over the combination of the 2010 904 Operating Manual, Lindee, and Sandberg. For the reasons discussed in Part V.B.5 above, we determine that Petitioner has

failed to demonstrate that claim 5 is unpatentable as obvious over the combination of the 2010 904 Operating Manual, Lindee, and Sandberg.

E. Ground 4: Obviousness Based on the 2010 904 Operating Manual, Lindee, Sandberg, and Matheus

Petitioner contends that the relevant disclosure of the 2010 904 Operating Manual is substantively identical to the 2006 904 Operating Manual, and that the analyses for claims 6 and 7 previously discussed in the Petition apply equally in this ground. Pet. 85 (citing Ex. 1009, 27–28, 33, 107, 110, 166; Ex. 1003 ¶¶ 45–46).

We find that the Petition does not establish by a preponderance of the evidence the unpatentability of claims 6 and 7 over the combination of the 2010 904 Operating Manual, Lindee, Sandberg, and Mathues for the reasons explained in Sections V.B and V.C.

VI. MOTION TO EXCLUDE

Pursuant to 37 C.F.R. §§ 42.62 and 42.64, Patent Owner moved to exclude Exhibit 1051 ¶¶ 61, 95–98, 108; Exhibit 1060 ¶ 35; and Exhibit 1068. Paper 58, 2.

Specifically, Patent Owner sought to exclude Exhibit 1051 ¶ 61 because it allegedly seeks "[t]o re-capture the missing 'disposed over' claim limitation" in which "Petitioner proposes a conveyor belt directly over the product holders." Paper 58, 4 (citing Reply 17–19). However, since the Federal Circuit determined that the "disposed over" limitation is disclosed by the combination of the 2006 904 Operating Manual, Lindee, and Sandberg, we dismiss Patent Owner's motion to exclude Exhibit 1051 ¶ 61 as moot.

We do not rely on Exhibit 1051 ¶¶ 95–98, 108, Exhibit 1060 ¶ 35 or Exhibit 1068 in a manner adverse to Patent Owner in rendering this

Decision. Patent Owner's motion to exclude is thus moot as to this evidence as well.

Accordingly, we dismiss Patent Owner's Motion to Exclude in its entirety as moot.

VII. CONCLUSION

In light of the Federal Circuit's decision, we determine that the Petition establishes by a preponderance of the evidence that each of claims 1–4 and 8–11 of the '812 patent is unpatentable as obvious over the combination of the 2006 904 Operating Manual, Lindee, and Sandberg, but does not established unpatentability of claims 6 and 7 (i.e., ground 1). We determine that the Petition does not establish that claims 6 and 7 of the '812 patent would have been obvious over the combination of the 2006 904 Operating Manual, Lindee, Sandberg, and Mathues (i.e., ground 2). We determine that the Petition establishes that each of claims 1–4 and 8–11 of the '812 patent is unpatentable as obvious over the combination of the 2006 904 Operating Manual, Lindee, Sandberg, and Mathues, but does not established unpatentability of claims 6 and 7 (i.e., ground 3). We further determine that the Petition does not establish that claims 6 and 7 of the '812 patent would have been obvious over the combination of the 2006 904 Operating Manual, Lindee, Sandberg, and Mathues (i.e., ground 4).

In summary,

Claims	35 U.S.C. §	Reference(s)	Claims Shown Unpatentable	Claims Not Shown Unpatentable
1–5, 8–11	103	2006 904 Operating Manual, Lindee, Sandberg	1–4, 8–11	5

Claims	35 U.S.C. §	Reference(s)	Claims Shown Unpatentable	Claims Not Shown Unpatentable
6, 7	103	2006 904 Operating Manual, Lindee, Sandberg, Mathues		6, 7
1–5, 8–11	103	2010 904 Operating Manual, Lindee, Sandberg	1–4, 8–11	5
6, 7	103	2010 904 Operating Manual, Lindee, Sandberg, Mathues		6, 7
		Overall Outcome	1–4, 8–11	5–7

VIII. ORDER

In consideration of the foregoing, it is hereby:

ORDERED that claims 1–4 and 8–11 of the ’812patent have been shown to be unpatentable;

ORDERED that claims 5–7 of the ’812patent have not been shown to be unpatentable

FURTHER ORDERED that Patent Owner’s motion to exclude is *dismissed* as moot;

FURTHER ORDERED that the parties shall jointly submit a proposed redacted version of the Final Written Decision (Paper 79) as a confidential Exhibit within 14 days of this Decision. In the absence of such a proposal, at the expiration of 14 days from the date of this Decision, the entirety of the Final Written Decision will be made available to the public.

FURTHER ORDERED that any party seeking judicial review must comply with the notice and service requirements of 37 C.F.R. § 90.2.[8]

[8] Should Patent Owner wish to pursue amendment of the challenged claims in a reissue or reexamination proceeding subsequent to the issuance of this Decision, we draw Patent Owner's attention to the April 2019 *Notice Regarding Options for Amendments by Patent Owner Through Reissue or Reexamination During a Pending AIA Trial Proceeding*. *See* 84 Fed. Reg. 16,654 (Apr. 22, 2019). If Patent Owner chooses to file a reissue application or a request for reexamination of the challenged patent, we remind Patent Owner of its continuing obligation to notify the Board of any such related matters in updated mandatory notices. *See* 37 C.F.R. § 42.8(a)(3), (b)(2).

PETITIONER:

Ralph Powers
Daniel Yonan
Donald Banowit
Kyle Conklin
Trevor O'Neill
Graham Phero
Richard Crudo
STERNE KESSLER GOLDSTEIN & FOX PLLC
Tpowers-ptab@sternekessler.com
Dyonan-ptab@sternekessler.com
Dbanowit-ptab@sternekessler.com
Kconklin-ptab@sternekessler.com
Toneill-ptab@sternekessler.com
Gphero-ptab@sternekessler.com
Rcrudo-ptab@sternekessler.com

PATENT OWNER:

Michael Babbitt
Sarah Horton
WILKIE FARR & GALLAGHER LLP
mbabbitt@wilkie.com
shorton@wilkie.com