Trials@uspto.gov
571-272-7822

Paper 43
Date: April 11, 2022

UNITED STATES PATENT AND TRADEMARK OFFICE

BEFORE THE PATENT TRIAL AND APPEAL BOARD

SHENZHEN BUXIANG NETWORK TECHNOLOGY CO., LTD.,
Petitioner,

v.

SUN PLEASURE CO. LIMITED,
Patent Owner.

IPR2021-00080
Patent 7,353,555 B2

Before KEN B. BARRETT, LYNNE H. BROWNE, and
PATRICK R. SCANLON, *Administrative Patent Judges*.

SCANLON, *Administrative Patent Judge*.

JUDGMENT
Final Written Decision
Determining No Challenged Claims Unpatentable
35 U.S.C. § 318(a)

ORDER
Dismissing Patent Owner's Motion to Exclude
37 C.F.R. § 42.64

I. BACKGROUND

ShenZhen BuXiang Network Technology Co., Ltd. ("Petitioner") challenges claims 1–9 of U.S. Patent No. 7,353,555 B2 (Ex. 1001, "the '555 patent"). We have jurisdiction under 35 U.S.C. § 6, and this Final Written Decision is issued pursuant to 35 U.S.C. § 318(a) and 37 C.F.R. § 42.73. For the reasons that follow, we determine that Petitioner has not shown by a preponderance of the evidence that claims 1–9 of the '555 patent are unpatentable.

A. Procedural History

Petitioner filed a Petition requesting an *inter partes* review of the challenged claims. Paper 1 ("Pet."). A Preliminary Response was not filed. We instituted a trial as to all challenged claims. Paper 6 ("Decision on Institution" or "Dec. Inst.").

After institution, Ideal Time Consultants Limited ("Ideal Time"), then the owner of the '555 patent, filed a Patent Owner Response (Paper 13, "PO Resp."), Petitioner filed a Reply (Paper 21, "Pet. Reply"), and Ideal Time filed a Sur-reply (Paper 28, "PO Sur-reply"). In addition, Ideal Time filed a Motion to Exclude Evidence (Paper 32), Petitioner filed an Opposition to the Motion to Exclude Evidence (Paper 34), and Ideal Time filed a Reply to the Opposition (Paper 37).

Petitioner relies on the Declaration of Bernhard Kuchel (Ex. 1002) and the Supplemental Declaration of Bernhard Kuchel (Ex. 1015) in support of its contentions. Ideal Time relies on the Declaration of Alan Letton, Ph.D. (Ex. 2001), the Declaration of Wai Shun Vincent Lau (Ex. 2005), the Declaration of Roger H. Lu (Ex. 2015), and the Declaration of Derek J. Demeo (Ex. 2016) in support of its contentions.

An oral hearing was held on January 25, 2022. A transcript of the hearing is included in the record. Paper 42 ("Tr.").

On January 31, 2022, the Board was informed that the '555 patent was assigned by Ideal Time to Sun Pleasure Co. Limited on January 26, 2022. Paper 40 (Mandatory Notice). Accordingly, the case caption for this proceeding has been changed to reflect this change in ownership. Nevertheless, for ease of reference, we use the designation "Patent Owner" hereinafter to refer to either Ideal Time or Sun Pleasure Co. Limited.

B. Real Parties in Interest

Petitioner identifies itself as a real party in interest and a subsidiary of ShenZhen LiYi99.com, Ltd. Pet. 1. In addition, Petitioner indicates that the following entities are also subsidiaries of ShenZhen LiYi99.com, Ltd.: (i) Hengshuihongrun Medical Equipment Business, Ltd.; (ii) ShenZhen Diwenzuanshi, Ltd.; (iii) ShenZhen Jiangrui Investment Development, Ltd.; (iv) Shenzhenshi Fentuolihua Business, Ltd.; (v) LiYi99.com (Beijing), Ltd.; (vi) Dongguan Flower of Life Network Technology, Ltd.; (vii) ShenZhen Adiqi E-Commerce, Ltd.; (viii) ShenZhen Qianlixue Technology, Ltd.; (ix) ShenZhen Sweet Century Gifts, Ltd.; and (x) ShenZhen Huoneng Technology, Ltd. *Id.*

Prior to the above-mentioned change in ownership of the '555 patent, Patent Owner identified Ideal Time and Sun Pleasure Co. Limited as the real parties in interest. Paper 5, 2. This identification does not appear to have changed as result of the change in ownership of the '555 patent. *See* Paper 40. Patent Owner also indicates that Sun Pleasure Co. Limited is a wholly owned subsidiary of Sun Pleasure Group Limited. Paper 5, 2.

C. Related Matters

The parties indicate that there are currently no matters that would affect, or be affected by, a decision in this proceeding. Pet. 2, Paper 5, 2.

D. The '555 Patent

The '555 patent, titled "Inflatable Mattress Assembly," issued April 8, 2008, with claims 1–13. Ex. 1001, code (54), code (45), 4:30–6:38. Figure 1 of the '555 patent is reproduced below.

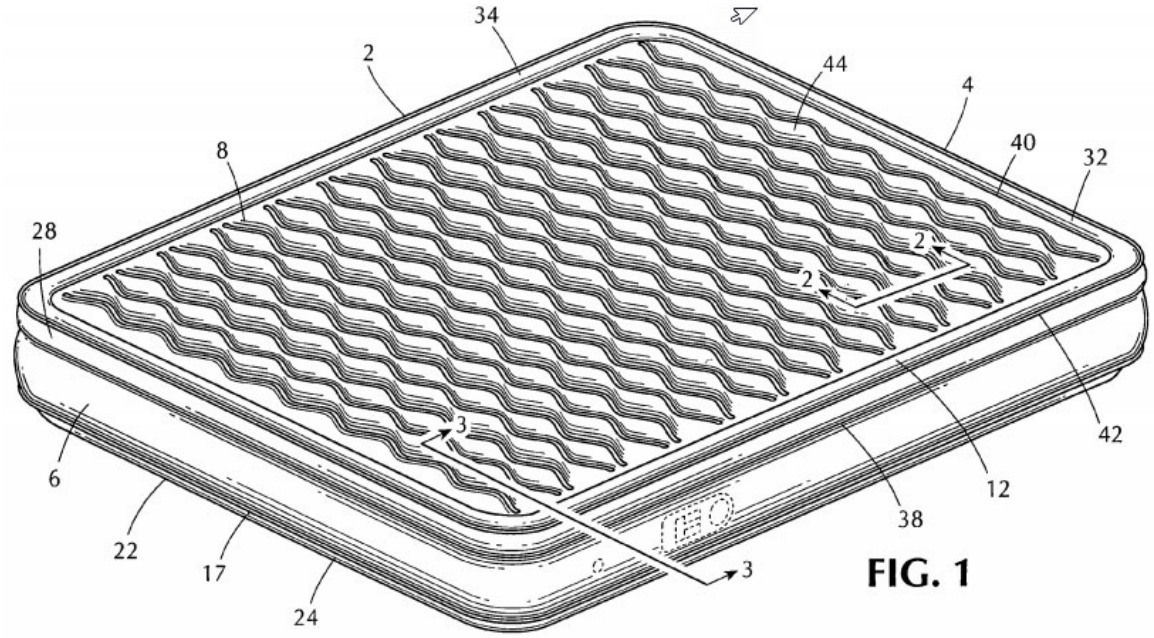

Figure 1 is a perspective view of mattress assembly 2 having top panel 8, bottom panel 22, peripheral side panel 16 (*see* Fig. 3), and peripheral frame 28 forming main mattress body 4. *Id.* at 2:22–23, 2:38–43.

Figure 3 is reproduced below.

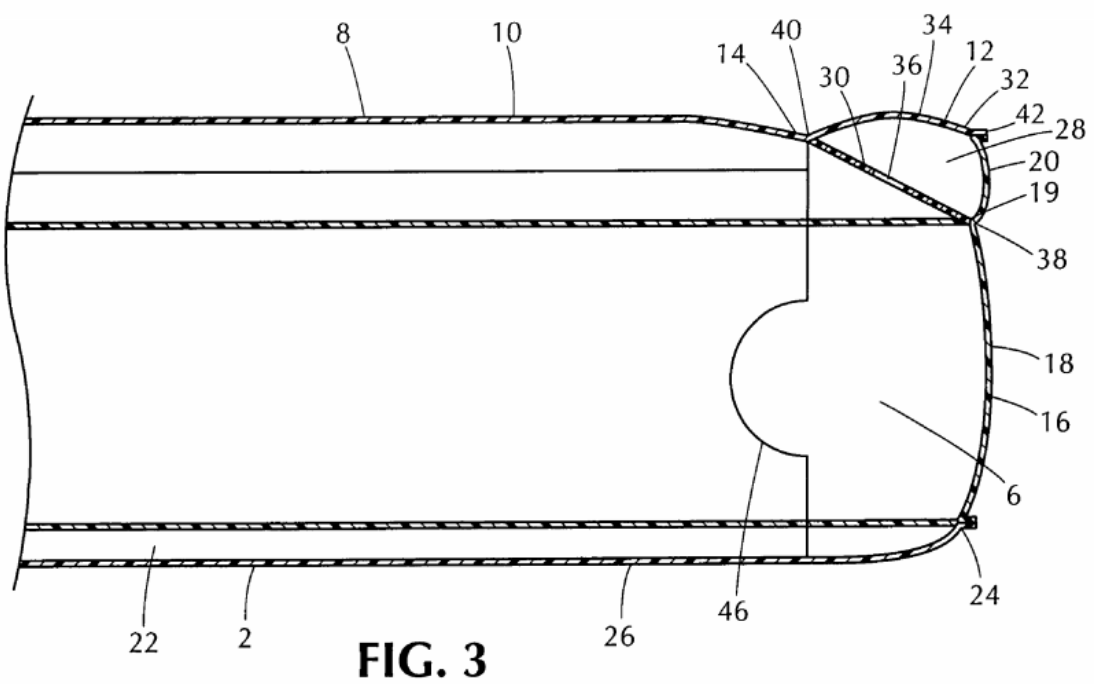

FIG. 3

Figure 3 is an end elevation sectional view showing a portion of mattress assembly 2, including peripheral frame 28, in more detail. *Id.* at 2:26–27, 2:48–57. Peripheral frame 28 forms an upper tubular periphery of inflatable mattress 2 and incudes internal wall 30 that interconnects top panel 8 and side panel 16. *Id.* at 2:53–56. In particular, internal wall 30 is connected to side panel 16 along first peripheral seam 38 located substantially below top panel 8 and to top panel 8 along second peripheral seam 40 located substantially inwardly of first seam 38. *Id.* at 2:58–65. Internal wall 30 includes fluid passage 36 therethrough so as to be in substantial pressure equilibrium within interior volume 6 and thus have a substantially linear cross-section between first and second seams 38, 40. *Id.* at 3:6–12.

Peripheral frame 28 also includes external wall 32 interconnecting first and second peripheral seams 38, 40. *Id.* at 3:1–2. External wall 32 comprises upper peripheral portion 20 of side panel 16 and outer peripheral portion 12 of top panel 8. *Id.* at 3:21–25. Upper peripheral portion 20 and outer peripheral portion 12 are interconnected along third peripheral seam

42. *Id.* at 3:27–29. When peripheral frame 28 is inflated by air pressure within interior volume 6 of mattress 2, external wall 32 has a substantially curved or arcuate cross-section between first and second seams 38, 40. *Id.* at 3:13–16. With this arrangement, first seam 38 forms a circumferential indentation or groove in side panel 16, thereby giving mattress 2 the appearance of a two-layered, pillow-top construction. *Id.* at 3:17–20.

E. Challenged Claims

Petitioner challenges claims 1–9 of the ’555 patent, of which claims 1 and 6 are independent. Claim 1 is illustrative of the claimed subject matter and is reproduced below:

> 1. An inflatable mattress comprising:
>
> top and bottom panels and a peripheral side panel with a bottom edge connected to said bottom panel;
>
> a peripheral frame forming an upper tubular periphery of said inflatable mattress, said peripheral frame having an internal wall interconnecting said top panel to said side panel, said internal wall being within an interior volume of said inflatable mattress;
>
> said internal wall being connected to said side panel along a first peripheral seam located substantially below a level of said top panel and being connected to said top panel along a second peripheral seam located substantially inwardly from said first peripheral seam;
>
> said peripheral frame having an external wall interconnecting said first seam to said second seam, said external wall forming a boundary of said inflatable mattress and having a top portion disposed above a level of said second peripheral seam; and
>
> said internal wall of said peripheral frame includes a fluid passage therethrough, said internal wall is in substantial pressure equilibrium within said interior volume, and said internal wall

> has a substantially linear cross-section between said first and second seams.

Ex. 1001, 4:30–52. Independent claim 6 recites the same limitations as claim 1 and adds the limitation:

> said peripheral frame is inflated by air pressure within said interior volume of said inflatable mattress and said external wall of said peripheral frame has a substantially arcuate cross-section between said first and second seams.

Id. at 5:4–31.

F. Instituted Grounds of Unpatentability

We instituted *inter partes* review of the challenged claims based on the following grounds of unpatentability asserted by Petitioner:

Claims Challenged	35 U.S.C. §[1]	Reference(s)/Basis
1–4, 6–8	102(b)	Metzger[2]
1–4, 6–8	103(a)	Metzger
5, 9	103(a)	Metzger, Wolfe[3]
1–4, 6–8	103(a)	Metzger, Wu[4]
5, 9	103(a)	Metzger, Wu, Wolfe

Dec. Inst. 28–29; Pet. 39.

II. ANALYSIS

A. Principles of Law

To prevail in its challenge, Petitioner must demonstrate by a preponderance of the evidence that the claims are unpatentable. 35 U.S.C.

---

[1] The Leahy-Smith America Invents Act ("AIA") included revisions to 35 U.S.C. §§ 102, 103 that became effective on March 16, 2013. Pub. L. No. 112-29, §§ 3(b), 3(c), 3(n)(1), 125 Stat. 284, 287, 293 (2011). Because the application from which the '555 patent issued has an effective filing date prior to March 16, 2013, we apply the pre-AIA versions of §§ 102, 103.
[2] US 7,089,618 B1, issued Aug. 15, 2006 (Ex. 1014).
[3] US 5,598,593, issued Feb. 4, 1997 (Ex. 1007).
[4] US 2006/0265810 A1, published Nov. 30, 2006 (Ex. 1009).

§ 316(e); 37 C.F.R. § 42.1(d). "In an IPR, the petitioner has the burden from the onset to show with particularity why the patent it challenges is unpatentable." *Harmonic Inc. v. Avid Tech., Inc.*, 815 F.3d 1356, 1363 (Fed. Cir. 2016) (citing 35 U.S.C. § 312(a)(3) (2012) (requiring *inter partes* review petitions to identify "with particularity . . . the evidence that supports the grounds for the challenge to each claim")). This burden of persuasion never shifts to the patent owner. *See Dynamic Drinkware, LLC v. Nat'l Graphics, Inc.*, 800 F.3d 1375, 1378 (Fed. Cir. 2015) (discussing the burden of proof in *inter partes* review).

"A claim is anticipated only if each and every element as set forth in the claim is found, either expressly or inherently described, in a single prior art reference." *Verdegaal Bros. Inc., v. Union Oil Co. of Cal.*, 814 F.2d 628, 631 (Fed. Cir. 1987). Moreover, "[b]ecause the hallmark of anticipation is prior invention, the prior art reference—in order to anticipate under 35 U.S.C. § 102—must not only disclose all elements of the claim within the four corners of the document, but must also disclose those elements 'arranged as in the claim.'" *Net MoneyIN, Inc. v. VeriSign, Inc.*, 545 F.3d 1359, 1369 (Fed. Cir. 2008). Whether a reference anticipates is assessed from the perspective of an ordinarily skilled artisan. *See Dayco Prods., Inc. v. Total Containment, Inc.*, 329 F.3d 1358, 1368 (Fed. Cir. 2003) ("[T]he dispositive question regarding anticipation [i]s whether *one skilled in the art* would reasonably understand or infer from the [prior art reference's] teaching that every claim element was disclosed in that single reference.").

Obviousness is a question of law based on underlying determinations of fact. *Graham v. John Deere Co.*, 383 U.S. 1, 17 (1966); *Richardson-Vicks, Inc. v. Upjohn Co.*, 122 F.3d 1476, 1479 (Fed. Cir. 1997). A claim is unpatentable as obvious, under 35 U.S.C. § 103, if the differences between

the claimed subject matter and the prior art are such that the subject matter, as a whole, would have been obvious at the time of the invention to a person having ordinary skill in the art. *KSR Int'l Co. v. Teleflex Inc.*, 550 U.S. 398, 406 (2007). The question of obviousness is resolved on the basis of underlying factual determinations including (1) the scope and content of the prior art; (2) any differences between the claimed subject matter and the prior art; (3) the level of ordinary skill in the art; and (4) objective evidence of non-obviousness.[5] *Graham*, 383 U.S. at 17–18. Consideration of the *Graham* factors "helps inform the ultimate obviousness determination." *Apple Inc. v. Samsung Elecs. Co.*, 839 F.3d 1034, 1048 (Fed. Cir. 2016) (en banc). To prevail in an *inter partes* review, Petitioner must explain how the proposed combinations of prior art would have rendered the challenged claims unpatentable. Subsumed within the *Graham* factors are the requirements that where all claim limitations are found in a number of prior art references, Petitioner must show that the skilled artisan would have had a reasonable expectation of success in combining the prior art references to achieve the claimed invention. *Pfizer, Inc. v. Apotex, Inc.*, 480 F.3d 1348, 1361 (Fed. Cir. 2007). "Obviousness does not require absolute predictability of success . . . all that is required is a reasonable expectation of success." *In re O'Farrell*, 853 F.2d 894, 903–04 (Fed. Cir. 1988) (citations omitted).

B. Level of Ordinary Skill in the Art

In determining whether an invention would have been obvious at the time it was made, 35 U.S.C. § 103 requires us to resolve the level of ordinary skill in the pertinent art at the time of the invention. *Graham*, 383

[5] The record does not include any evidence of objective indicia of non-obviousness.

U.S. at 17. The person of ordinary skill in the art is a hypothetical person who is presumed to have known the relevant art at the time of the invention. *In re GPAC, Inc.*, 57 F.3d 1573, 1579 (Fed. Cir. 1995). Factors that may be considered in determining the level of ordinary skill in the art include, but are not limited to, the types of problems encountered in the art, the sophistication of the technology, and educational level of active workers in the field. *Id.* In a given case, one or more factors may predominate. *Id.*

Relying on the testimony of Mr. Kuchel, Petitioner submits that a person of ordinary skill in the art "would have either (i) a bachelor's degree in mechanical engineering, or an equivalent field, or (ii) would have an associate degree in mechanical engineering, or an equivalent field, and two years of practical experience in inflatable product design." Pet. 16 (citing Ex. 1002 ¶ 26).

In the Decision on Institution, we adopted Petitioner's proposed level of ordinary skill in the art, stating it was "consistent with the evidence of record, including the asserted prior art." Dec. Inst. 9. In its Response, Patent Owner makes arguments that rely on Petitioner's proposed level of ordinary skill in the art, but does not dispute Petitioner's definition. *See* PO Resp. 35, 39–53 (citing Ex. 2014 ¶ 66).

Based on our review of the complete record, we continue to apply the level of ordinary skill in the art adopted in the Decision on Institution.

C. Claim Construction

"In an *inter partes* review proceeding, a claim of a patent . . . shall be construed using the same claim construction standard that would be used to construe the claim in a civil action under 35 U.S.C. 282(b)." 37 C.F.R. § 42.100(b) (2020). Under that standard, we generally give claim terms their ordinary and customary meaning, as would be understood by a person of

ordinary skill in the art at the time of the invention, in light of the language of the claims, the specification, and the prosecution history. *See Phillips v. AWH Corp.*, 415 F.3d 1303, 1313–14 (Fed. Cir. 2005) (en banc). Although extrinsic evidence, when available, may also be useful when construing claim terms under this standard, extrinsic evidence should be considered in the context of the intrinsic evidence. *See id.* at 1317–19.

Petitioner proposes claim constructions for the terms "substantially below" and "substantially inwardly" recited in claims 1 and 6. Pet. 40–41. In the Decision on Institution, we determined that it was not necessary to construe the terms at that stage of the proceeding. Dec. Inst. 9–10 (citing *Nidec Motor Corp. v. Zhongshan Broad Ocean Motor Co.*, 868 F.3d 1013, 1017 (Fed. Cir. 2017)).

Patent Owner contends "the claim terms 'substantially below' and 'substantially inwardly' are sufficiently clear on their face to preclude any need for claim construction," but proposes claim constructions that differ somewhat from Petitioner's proposed constructions in the event the Board determines that these terms require claim construction. PO Resp. 13, 15–16. Patent Owner also proposes a claim construction for the term "upper tubular periphery" recited in claims 1 and 6 that Petitioner opposes. *Id.* at 17–19; Pet. Reply 7–10.

Only terms that are in controversy need to be construed, and then only to the extent necessary to resolve the controversy. *Nidec*, 868 F.3d at 1017. Because the outcome of our decision does not depend on either parties' construction of the terms "substantially below," "substantially inwardly," or "upper tubular periphery," we need not construe these terms to resolve the issues in dispute in this proceeding.

D. Asserted Anticipation by Metzger

Petitioner contends claims 1–4 and 6–8 are anticipated by Metzger. Pet. 44–73. Patent Owner provides arguments addressing this asserted ground of unpatentability. PO Resp. 20–34. We first summarize Metzger and then address the parties' contentions.

1. Metzger

Metzger relates to air mattresses, particularly an air mattress constructed to limit expansion or deformation of the mattress during use. Ex. 1014, 1:5–8. Figure 1 of Metzger is reproduced below.

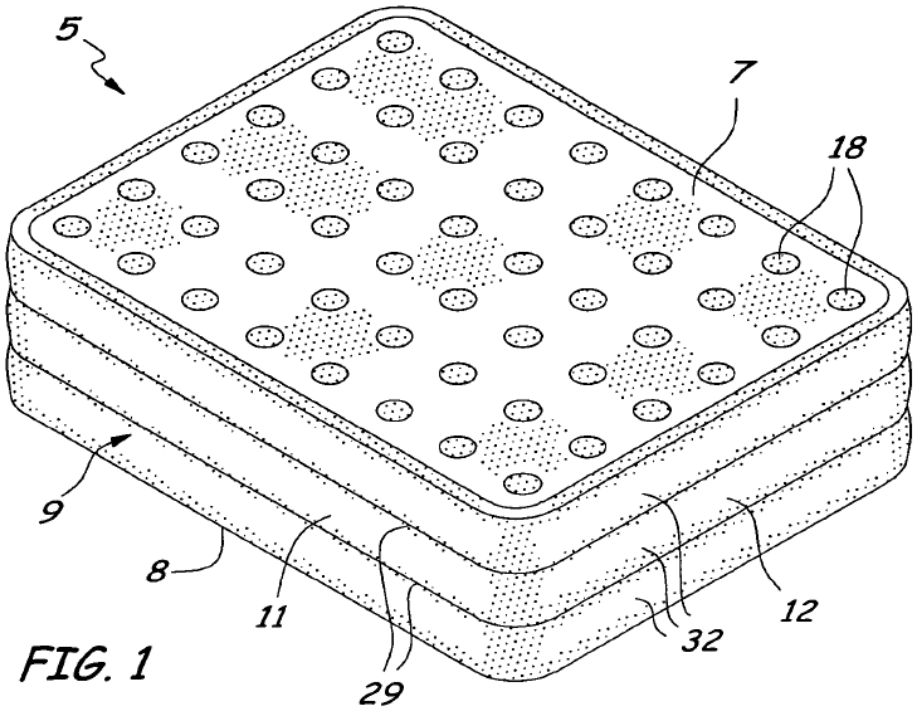

Figure 1 shows air mattress 5 comprising first planar top panel 7, second planar bottom panel 8, and side panel or wall 9. *Id.* at 4:6–10. Side panel 9 may be formed from first side panel 11, second side panel 12, third side panel 13, and fourth side panel 15. *Id.* at 4:15–17 (third and fourth side panels 13, 15 not shown in Figure 1).

Figure 7 is reproduced below.

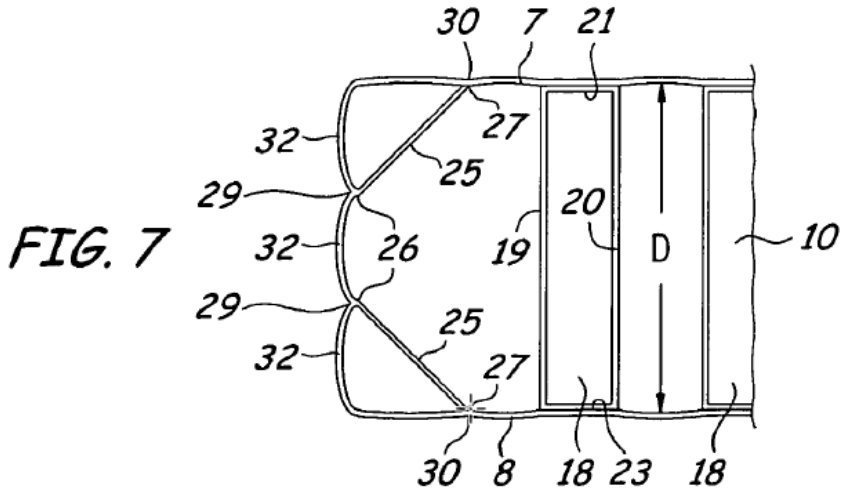

Figure 7 is a partial cross-sectional elevation view of air mattress 5. *Id.* at 3:66–67. Mattress 5 includes side support beams 25 that "extend[] in the lengthwise direction of at least one of the mattress side panels, or along each one of the side panels of the air mattress." *Id.* at 5:27–30. First edge 26 of each side support beam 25 is affixed to a side panel along weld or connection line 29, and a second edge[6] of each side support beam 25 is affixed to a side panel along weld line 30. *Id.* at 5:30–35. With this arrangement, the side support beams define three separate side panel segments 32. *Id.* at 5:64–6:1.

Metzger's side support beams 25 are further depicted in Figure 5, which is reproduced below.

[6] Although not specified in the written description, the second edge appears to be identified in Figure 7 with reference numeral 27.

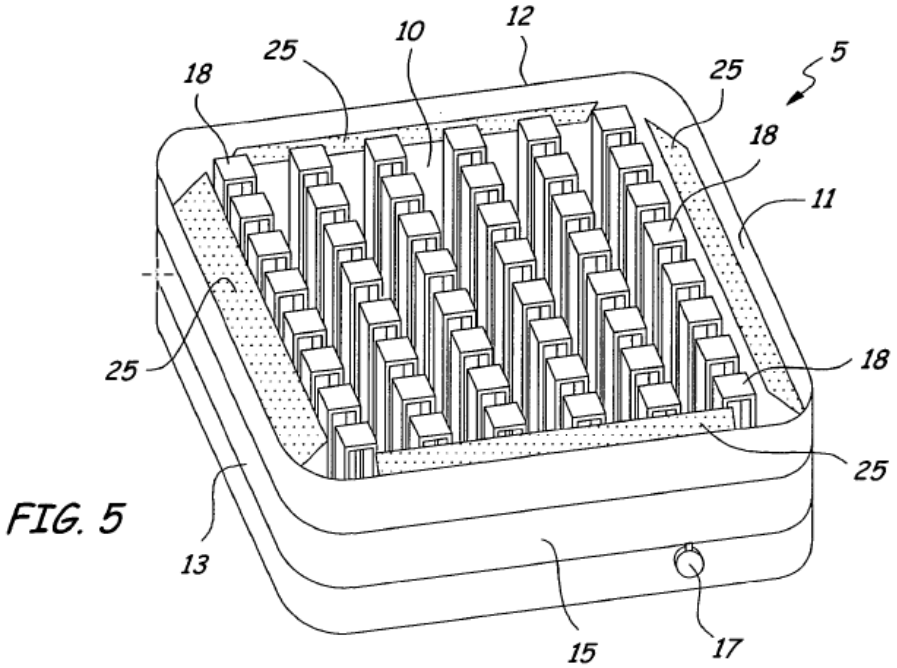

Figure 5 is a perspective view of air mattress 5 with the top cover panel removed. *Id.* at 3:58–60. As seen in Figure 5, air mattress 5 includes four separate side support beams 25, each beam extending parallel to and along a corresponding one of side panels 11, 12, 13, 15.

2. Independent Claim 1

Petitioner provides analysis purporting to show where each limitation recited in independent claim 1 is disclosed by Metzger. Pet. 44–67. In particular, Petitioner asserts that Metzger discloses an inflatable air mattress having top panel 7, bottom panel 8, and peripheral side panel 9 extending between the top and bottom panels. *Id.* at 45–47 (citing Ex. 1014, 4:7–12, 4:15–20, Figs. 1–3, 7).

Petitioner also asserts that Metzger discloses a peripheral frame that forms an upper tubular periphery. *Id.* at 48. Specifically, Petitioner contends that Metzger discloses side support beam 25 having one edge affixed to a side panel and another edge affixed to top panel 7, and the inner space or volume created by this arrangement frames the upper periphery of

the mattress and forms an upper tubular periphery. *Id.* at 48–49 (citing Ex. 1014, 5:31–35, Figs. 3, 4, 7; Ex. 1002 ¶¶ 147–148). To support this contention, Petitioner submits annotated versions of Figures 4 and 7 of Metzger, which we reproduce below.

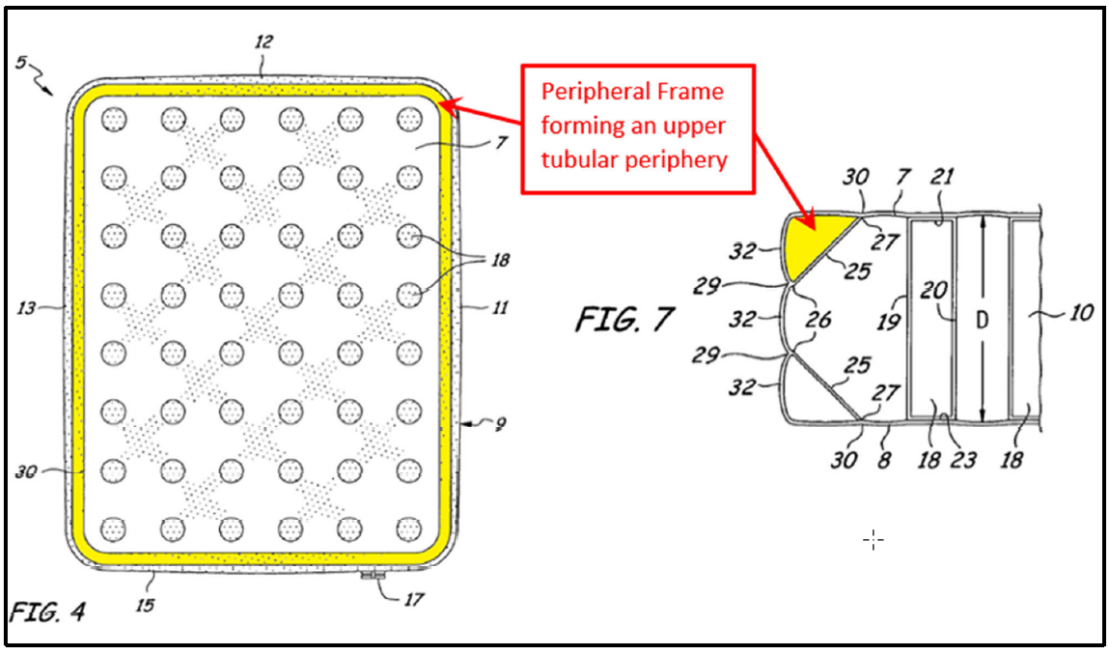

Id. at 49. For these annotated versions of the figures, Petitioner added (1) yellow overlay to an outer peripheral portion of top panel 7 in Figure 4, (2) yellow overlay to the inner space formed by upper side support beam 25, the portion of top panel 7 from weld line 30 to side panel segment 32, and side panel segment 32 in Figure 7, and (3) text with red arrows identifying the yellow portions of Figures 4 and 7 as "Peripheral Frame forming an upper tubular periphery." *Id.* Referring to annotated Figure 4, Petitioner states that "the inner space (yellow) is shown extending around the upper periphery of the air mattress, surrounding or framing the mattress. This inner space or volume ***forms an upper tubular periphery*** of the air mattress (yellow)." *Id.* at 48.

Petitioner also contends that upper side support beam 25, as depicted in Figure 7 of Metzger, is an internal wall that interconnects top panel 7 to side panel segment 32 via welds 29, 30. *Id.* at 50 (citing Ex. 1014, 5:31–35, Fig. 7; Ex. 1002 ¶¶ 151–152).

We focus our analysis on the claim 1 limitation "said internal wall of said peripheral frame includes a fluid passage therethrough." Petitioner presents two alternative arguments asserting that Metzger discloses this limitation. *Id.* at 58–64. We address each argument in turn.

a) Petitioner's First Argument

Petitioner argues that Figures 5 and 6 of Metzger "show gaps at the four corners of the inflatable mattress between four side support beams 25," and "[t]hese gaps expressly or inherently define fluid passages through the internal wall (side support beams 25)." *Id.* at 59–60. Petitioner further argues that these gaps allow air to pass from air chamber 10 into the upper tubular periphery, and one of ordinary skill in the art would have understood that the upper tubular periphery would not receive air pumped into air chamber 10 via valve 17 without the gaps. *Id.* at 60 (citing Ex. 1002 ¶ 174).

In its Response, Patent Owner disputes that the gaps of Metzger meet the claimed fluid passage, asserting that Mr. Kuchel acknowledged during his deposition that the gaps are not fluid passages formed through Metzger's side support beams 25. PO Resp. 31–32 (citing Ex. 2003, 106:21–109:3). In Patent Owner's view, the claim language "a fluid passage therethrough" requires that the passage exists through the wall structure as opposed to a gap where no structure exists. *Id.* at 32 (citing Ex. 2001 ¶¶ 97–99, 125).

We agree with Patent Owner that Metzger's gaps define fluid passages located between adjacent side support beams 25 (i.e., "internal walls") and are not formed in any of the side support beams. We are not

directed to any written description in Metzger indicating that the gaps are formed in a side support beam.[7] Instead, Figures 5 and 6 of Metzger depict the gaps as being defined between four distinct side support beams 25. Furthermore, as Patent Owner points out, Mr. Kuchel appears to agree that there are no passages formed through the side support beams 25 of Figures 5 and 6. Ex. 2003, 107:12–108:9, 108:17–108:21. For these reasons, we determine that Metzger's gaps are not formed *through* an internal wall, as required by claim 1.

In the Reply, Petitioner asserts that, even if Metzger discloses four discrete, spaced-apart beams or walls, "the gaps or slices between walls are apertures in *a structure* through which air can pass." Pet. Reply 15 (emphasis added). This argument is not persuasive because claim 1 recites that the fluid passage is formed through the *internal wall* (which Petitioner asserts is met by Metzger's side support beam 25), not just any structure. Petitioner's general assertion that air passes through "a structure" fails to establish that the gaps are formed in a side support beam.

Petitioner also argues that "Dr. Letton testified that these gaps function as air passages to inflate Metzger's upper tubular periphery," and Mr. Vincent Lau, the inventor of the '555 patent, "testified that his fluid passages *can be any size or shape*." Pet. Reply 15 (citing Ex. 1017, 117:12–16; Ex. 1016, 198:21–199:7). These arguments are not persuasive. The mere fact that Metzger's gaps can function as air or fluid passages does not establish that they are formed in a side support beam. And we are not persuaded that Mr. Lau's testimony that the fluid passage of the '555 patent

[7] Indeed, Metzger's written description does not appear to discuss the gaps at all.

can be of any size or shape has much, if any, bearing on whether Metzger's gaps are formed in a side support beam. We note that Petitioner also argues that the size of Metzger's gaps is not discussed. Pet. 60. To the extent that Petitioner is contending that the claimed fluid passage and Metzger's gaps could be the same size and shape, however, this contention, even if true, does not establish that Metzger's gaps are formed in a side support beam.

For the above reasons, Petitioner's first argument is not persuasive.

b) Petitioner's Second Argument

Petitioner presents an alternative argument in the event "that the corner gaps between the side support beams 25 in FIGS. 5 and 6 of [Metzger] fall short of forming a fluid passage." Pet. 60. For this second argument, Petitioner asserts that Metzger "is directed to 'an air mattress or bed ***constructed to limit the expansion or deformation*** of the mattress during use,'" and a person having ordinary skill in the art

> would have understood that the internal wall (side support beam(s) 25) of the peripheral frame *would or should extend around the perimeter of the mattress*, to the extent that the peripheral frame or upper tubular periphery extend around the mattress. This would have been understood to be effective in restraining outward expansion of the side panels, particularly at the four corners, of the air mattress.

Id. at 60–61 (citing Ex. 1014, 1:6–8, 3:9–12, 5:52–59; Ex. 1002 ¶ 170) (second emphasis added).

In support of this assertion, Petitioner argues that Metzger discloses that its mattress may have only a single side panel and thus define a circular shape, and one of ordinary skill in the art would have understood that this configuration would include a single, continuous side support beam affixed to the single side panel. *Id.* at 61 (citing Ex. 1014, 4:23–28; Ex. 1002 ¶ 170). Petitioner also contends that one of ordinary skill in the art would

have understood that Metzger teaches that a continuous wall is *preferable* to multiple, discontinuous internal walls, even for the four-sided mattress shown in Metzger's drawings, because a discontinuous internal wall would have had several disadvantages. *Id.* at 61–62 (citing Ex. 1002 ¶¶ 84, 171).

In addition, Petitioner argues that Metzger "expressly or inherently teaches that the upper and lower side support beams 25 (i.e., internal walls) extend around the corners of the air mattress" because Figures 1 and 5 show that weld lines 29 and 30 "continue uninterrupted around the corners of the mattress on the side wall 9 and top panel 7." *Id.* at 62 (citing Ex. 1014, Figs. 1, 5; Ex. 1002 ¶ 172). To support this contention, Petitioner submits annotated versions of Figures 1 and 5 of Metzger, which we reproduce below.

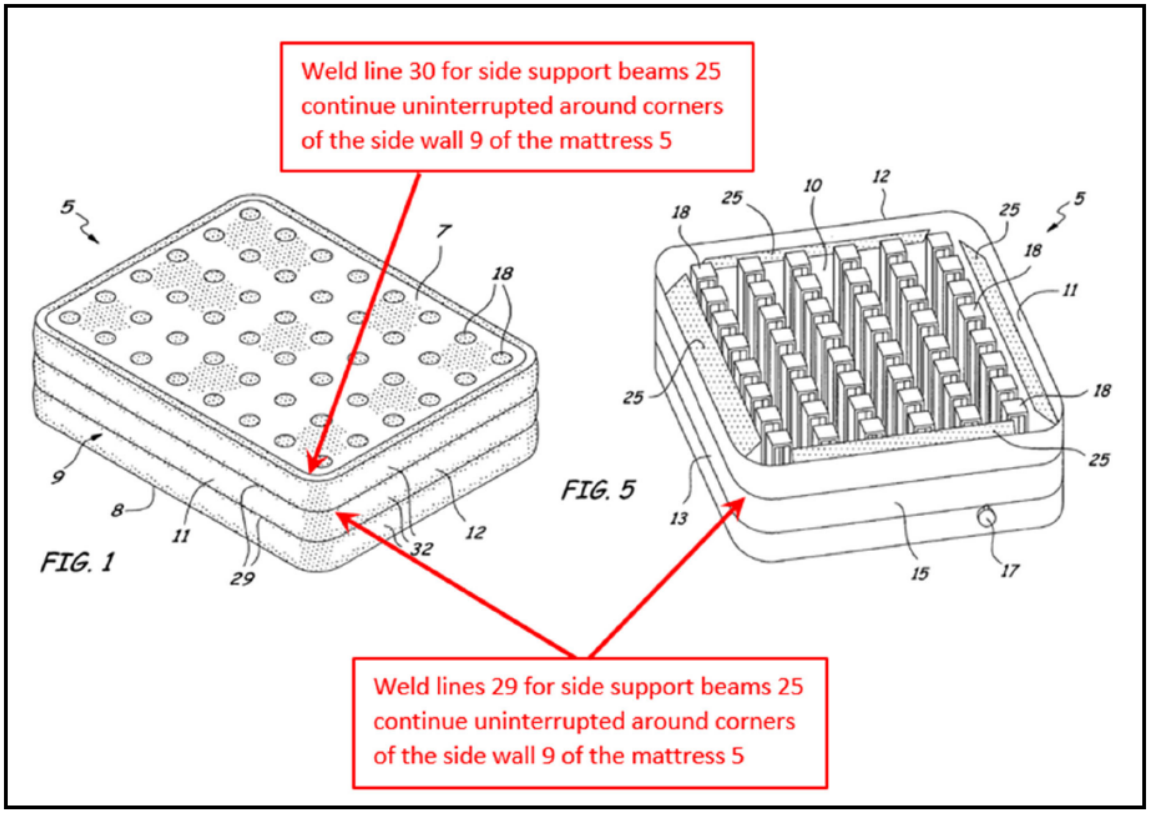

Id. at 63. For these annotated versions of the figures, Petitioner added text with red arrows identifying exterior lines on the mattress as weld lines 29 and 30 continuing uninterrupted around the corners of side wall 9. *Id.*

Patent Owner disputes Petitioner's argument that Metzger discloses a single, continuous side support beam. PO Resp. 26–30. Specifically, Patent Owner argues that, contrary to Petitioner's assertion, Metzger does not teach a continuous internal wall at all, let alone that such a wall would have been preferable to multiple internal walls. *Id.* at 27. Patent Owner adds that this argument by Petitioner ignores the depictions of four discrete side support beams in Figures 5 and 6 of Metzger, which Patent Owner contends are the only figures in Metzger that depict the internal mattress structure. *Id.* (citing Ex. 2001 ¶ 119).

Patent Owner also argues that Metzger's description of a circular mattress with a single side panel does not mention the side support beams at all, much less a single, continuous support beam. *Id.* at 27–28 (citing Ex. 1014, 4:21–28; Ex. 2003, 79:12–20; Ex. 2001 ¶¶ 111–113). Regarding Petitioner's argument relying on the uninterrupted lines in Figures 1 and 5 of Metzger, Patent Owner argues that these lines "have numerous other, more plausible explanations, including a patent drawing drafting error or a simple heat mark," and "do not expressly or inherently disclose the presence of a support beam in the corners of the Metzger mattress." *Id.* at 28–29 (citing Ex. 2001, ¶¶ 111–113, 115–118.)

We agree with Patent Owner that Metzger does not disclose a single, continuous side support beam. As Petitioner argues, Metzger is concerned with constructing an air mattress so as to limit its expansion or deformation of the mattress during use. Pet. 60; Ex. 1014, 1:6–8. Metzger discloses that "[t]he side support beam, or beams, are . . . constructed and arranged to limit

the outward expansion of the at least one side panel of the air mattress in response to the presence of an external load." Ex. 1014, 3:8–11; *see also id.* at 5:52–59 ("The side support beam or beams . . . act to limit the outward expansion of the side panel(s) of the air mattress to which the side support beams are affixed or otherwise attached in response to the presence of a load . . . .").

These mentions of a single beam, however, do not teach or suggest a single beam extending entirely around the mattress, including the corners. Metzger does not describe a single beam as extending around the mattress. Instead, Metzger discloses that "the mattress may include at least one side support beam 25 extended in the lengthwise direction of at least one of the mattress side panels, or along each one of the side panels of the air mattress." *Id.* at 5:27–30. Then, after discussing that first and second side support beams may be affixed to the same side panel (i.e., upper and lower side support beams 25 as depicted in Figure 7), Metzger discloses that "there may be one or two side support beams for at least one side panel of the mattress, for some of the mattress side panels, or for each of the side panels of the air mattress (FIGS. 1, 4–6), as desired." *Id.* at 5:41–51. We read these disclosures as conveying that each side support beam is associated with a corresponding side panel and one, some, or all of the four side panels can have their own upper side support beam. This reading of Metzger's written description is consistent with the depiction of the side support beams in Figures 5–7.

Furthermore, we are not persuaded that Metzger's disclosure of a single, circular side panel supports Petitioner's assertion that Metzger discloses a single, continuous side support beam. In this respect, Metzger discloses only that "the air mattress may be formed of any desired number of

side walls or panels such that the air mattress may have only *a single side panel* and thus be circular in plan view." Ex. 1014, 4:23–26 (emphases added). Metzger does not describe any support beam in connection with this arrangement and, thus, does not disclose expressly that the circular mattress has a single, continuous side support beam.

Petitioner also does not establish that Metzger inherently discloses a single, continuous side support beam because neither the Petition nor Mr. Kuchel explains sufficiently why Metzger's circular mattress would necessarily include a single, continuous side support beam. *See Transclean Corp. v. Bridgewood Servs., Inc.*, 290 F.3d 1364, 1373 (Fed. Cir. 2002) ("[A]nticipation by inherent disclosure is appropriate only when the reference discloses prior art that must *necessarily* include the unstated limitation."). Mr. Kuchel testifies that because Metzger "discloses a mattress having a single, continuous side panel (i.e., circular mattress), . . . the side support beam 25 (i.e., internal wall) affixed to the single, continuous side panel must also be a single, continuous piece of material." Ex. 1002 ¶ 170. This testimony, however, is a conclusory statement not supported adequately by objective evidence or analysis. That the undisclosed support beam of Metzger's circular mattress might be a single, continuous side support beam is insufficient. *See Bettcher Indus., Inc. v. Bunzl USA, Inc.*, 661 F.3d 629, 639 (Fed. Cir. 2011) ("Inherency, however, may not be established by probabilities or possibilities. The mere fact that a certain thing may result from a given set of circumstances is not sufficient."). Accordingly, we do not credit Mr. Kuchel's testimony on this point. *See* 37 C.F.R. § 42.65(a) ("Expert testimony that does not disclose the underlying facts or data on which the opinion is based is entitled to little or no weight."); *see also Nobel Biocare Services AG v. Instradent USA, Inc.*,

903 F.3d 1365, 1382 (Fed. Cir. 2018) (explaining that the Board can reject arguments based on expert testimony that lacks specificity or detail).

We also disagree with Petitioner's argument that Metzger teaches that a continuous wall is *preferable* to multiple, discontinuous internal walls, even for four-sided mattresses. *See* Pet. 61. Petitioner's assertion that one of ordinary skill in the art would have understood that a discontinuous internal wall would have several disadvantages is also unpersuasive. *See id.* at 61–62; Ex. 1002 ¶¶ 84, 171. Even assuming for the sake of argument that one of ordinary skill in the art would have recognized that discontinuous internal walls suffered the alleged disadvantages, this recognition would not mean that Metzger discloses a single, continuous side support beam. Petitioner does not explain adequately why the alleged disadvantages—as opposed to actual disclosure—are relevant to an anticipation analysis.

Last, we disagree with Petitioner's contention that the continuous lines depicted in Figures 1 and 5 of Metzger demonstrate that side support beams 25 extend around the corners of the mattress. *See* Pet. 62. We agree that Figure 1 of Metzger shows two weld lines 29 extending around the corners of the mattress's side walls. Figure 1 also shows a line on top panel 7 that extends around the corners of the mattress. This line is not called out by a reference numeral, but it appears to correspond to weld line 30 depicted in Figures 4 and 7. Figure 5 also shows two lines in the side panels extending around the mattress's corners. Figure 5, however, clearly shows four discrete side support beams that do not extend into the corners such that there is no structure corresponding to the exterior lines extending around corners. Also, we agree with Patent Owner that Figure 5 does not show a corresponding interior line in the upper left corner, and Figures 5 and 6 both show an absence of the support beams in the corners. *See* Tr. 31:23–26,

32:10–12. As such, these figures undercut Petitioner's argument that the exterior lines demonstrate that side support beams 25 extend around the corners of the mattress.

At the hearing, Petitioner argued that Figures 5 and 6 of Metzger show a different embodiment than the embodiment of Figures 1–4. Tr. 11:6–12:26 (noting that each description for Figures 1–4 in the "Brief Description of the Drawings" section of Metzger references Figure 1, but the descriptions for Figures 5 and 6 do not); *see also* Ex. 2003, 75:8–22, 77:16–19 (Mr. Kuchel testifying that Metzger teaches multiple embodiments). Petitioner also argued that the two lines in the side panels of Figure 5 *were not weld lines 29*, contradicting the assertion in the Petition that these lines are weld lines 29. *Compare* Tr. 13:1–14:9, *with* Pet. 62–63.

We are not persuaded that Figures 5 and 6 depict a different embodiment than Figures 1–4. As Patent Owner correctly argues, "Metzger repeatedly references Figure 1 in connection with Figures 5–6, among others" and "never says that its figures depict different embodiments." PO Resp. 29 (citing Ex. 1014, 4:21–24, 4:41, 5:12, 5:48–51). And even if Figures 1–4 do depict a different embodiment, we are not persuaded that this embodiment has a single, continuous support beam extending completely around the mattress because Metzger is silent with respect to the internal structure of Figures 1–4.[8]

In the Reply, Petitioner refers to Mr. Kuchel's testimony regarding a commercial product purported to be a commercial embodiment of Metzger's mattress. Pet. Reply 13, 15 (citing Ex. 1015 ¶¶ 33–43). Mr. Kuchel testifies

[8] Figure 7 of Metzger depicts internal structure but does not disclose a single, continuous support beam extending completely around the mattress.

that he acquired an air mattress, referred to as the "Coleman Airbed," on September 27, 2021, and Exhibit 1019 contains a series of photographs of the Coleman Airbed. Ex. 1015 ¶¶ 40, 42. Mr. Kuchel testifies that Metzger's patent number is marked on the product box of the Coleman Airbed, and states that "[i]t is my understanding that a product or its packaging displaying a patent number (i.e., patent marking) indicates to the public that that product is an embodiment of, and covered by, the patent displayed on the product or packaging." *Id.* ¶¶ 40, 43. Mr. Kuchel then testifies that he inspected the internal structure of the Coleman Airbed and observed that "the internal structure of the Coleman Airbed includes an upper and lower continuous oblique internal wall that wraps around the corners of the mattress, and that these continuous oblique internal walls include fluid passages in the form of circular-shaped cutouts." *Id.* ¶ 42. Mr. Kuchel clarifies that "[f]or the avoidance of doubt, I am not using the Coleman Airbed as a new ground for unpatentability. Rather, it is being used to support and corroborate my written and oral testimony." *Id.* ¶ 41.

Patent Owner argues that because "Mr. Kuchel also acknowledged that he did not analyze whether the Coleman [Airbed] has all the features of any of Metzger's claims, instead relying entirely on the presence of the Metzger patent number on the box," "Petitioner has not established that the Coleman [Airbed] has any correspondence to the airbed disclosed in Metzger." PO Sur-reply 13 (citing Ex. 2024, 193:9–17, 207:2–208:1).

We agree with Patent Owner. Although a patent marking on a product is intended to give notice that the product is patented, false patent marking, either inadvertent or intentional, is a possibility envisioned by the Patent Act. *See* 35 U.S.C. §§ 287(a), 292. Thus, the patent marking on the Coleman Airbed box, by itself, is insufficient to establish by a

preponderance of the evidence that the Coleman Airbed is covered by Metzger. More importantly, even if assuming for the sake of argument that the Coleman Airbed is covered by Metzger, the Coleman Airbed having a continuous oblique internal wall that wraps around the corners of the mattress and includes fluid passages does not mean that Metzger has to disclose the same structure. A patented product can include features not claimed in the patent. Here, Neither Petitioner nor Mr. Kuchel explain sufficiently—or even assert—that the continuous internal wall of the Coleman Airbed is claimed in Metzger. Indeed, Metzger does not claim a continuous internal wall that wraps around the corners of the mattress. *See* Ex. 1014, 6:49–10:33.

For the reasons above, we are not persuaded on the record before us that Metzger discloses, either expressly or inherently, a single, continuous side support beam extending completely around the mattress. Given that Petitioner has not shown sufficiently that Metzger discloses a single, continuous side support beam, we are not persuaded that one of ordinary skill in the art would have understood that a fluid passage must be provided in the continuous side support beam.

c) Conclusion

In view of the above, we determine that Metzger does not disclose the claim 1 limitation "said internal wall of said peripheral frame includes a fluid passage therethrough." Accordingly, we are not persuaded that Petitioner has met its burden of showing, by a preponderance of the evidence, that independent claim 1 is anticipated by Metzger.

3. Independent Claim 6

Independent claim 6 recites the same limitations as claim 1 and adds a limitation "said peripheral frame is inflated by air pressure within said

interior volume of said inflatable mattress and said external wall of said peripheral frame has a substantially arcuate cross-section between said first and second seams." *Compare* Ex. 1001, 4:30–52, *with id.* at 5:4–31. For its analyses of claim 6, Petitioner refers back to its analysis of claims 1 and 2. Pet. 73 (citing Ex. 1002 ¶ 193). Thus, Petitioner's challenge to claim 6 is based on the same deficient assertions discussed above in the analysis of independent claim 1. For these same reasons, we find Petitioner's arguments unpersuasive and are not persuaded that Petitioner has met its burden of showing, by a preponderance of the evidence, that independent claim 6 is anticipated by Metzger.

4. Dependent Claims 2–5 and 7–9

Claims 2–5 depend from claim 1, and each of these dependent claims thus contains all the limitations of claim 1. Claims 7–9 depend from claim 6, and each of these dependent claims thus contains all the limitations of claim 6. Petitioner's challenges to dependent claims 2–5 and 7–9 do not overcome the deficiencies of Metzger with respect to claims 1 and 6. *See* Pet. 68–73. Accordingly, for the same reasons discussed above in connection with claims 1 and 6, we also determine Petitioner has not demonstrated, by a preponderance of the evidence that claims 2–5 and 7–9 are anticipated by Metzger.

E. Asserted Obviousness Based on Metzger

Petitioner contends claims 1–4 and 6–8 are obvious over Metzger. Pet. 74–76. Patent Owner provides arguments addressing this asserted ground of unpatentability. PO Resp. 34–53.

For this ground, Petitioner relies on the same teachings of Metzger relied on in connection with the ground asserting that claims 1–4 and 6–8 are anticipated by Metzger, "except with respect to the limitation of said internal

wall of said peripheral frame includes a fluid passage therethrough." Pet. 74 (emphasis omitted). Petitioner argues that this limitation is satisfied by Metzger in combination with the common sense and experience of a person having ordinary skill in the art. *Id.* (citing Ex. 1002 ¶ 199).

Specifically, Petitioner argues that one of ordinary skill in the art would have understood from Metzger "that an air passage would be necessary to bypass the side support beam 25 and inflate the upper tubular periphery for the air mattress to function as intended." *Id.* (citing Ex. 1002 ¶ 200). According to Petitioner, because Metzger discloses only a single air inlet valve, an ordinarily skilled artisan

> would have understood that providing openings, or fluid passages, through the side support beam 25, in lieu of or in addition to the gaps between the side support beam 25, would have been a simple solution to adequately inflate the peripheral frame of the mattress defined by the side support beam(s) 25.

Id. at 74–75 (citing Ex. 1002 ¶ 200). Petitioner thus presents two alternate theories for modifying Metzger: (1) providing fluid passages in at least one side support beam 25 in addition to the gaps, and (2) providing fluid passages in lieu of the gaps.

In support of the first theory, Petitioner only argues that providing fluid passages in the side support beams, in addition to the gaps between the ends of the side support beams, would have allowed the peripheral frame to inflate more freely. *Id.* at 75 (citing Ex. 1002 ¶ 201).

In its Response, Patent Owner contends that "Petitioner is just wrong." PO Resp. 45 (citing Ex. 2001 ¶¶ 146–149). Dr. Letton testifies that pumps used to inflate air mattresses are low flow and low pressure and generally inflate an air mattress to a maximum pressure of around 1 psi. Ex. 2001 ¶ 147. Dr. Letton further testifies that, with Metzger's design, the

large gaps between the support beams would allow air to flow freely throughout the internal chamber. *Id.* ¶ 148. Dr. Letton then testifies that:

> Given the low flow rate of the pump, the size of the internal chamber, and the gaps in the corners of the mattress between the beams 25, the Metzger mattress would not experience any actual restriction on the air flow into and out of the spaces between the beams and the upper surface of the mattress.

Id. ¶ 149. As such, Dr. Letton testifies that adding "openings through a central portion" of Metzger's side support beams would have no practical benefit.

In contrast, Mr. Kuchel's testimony on this point merely repeats the Petition's assertion and is a conclusory statement not supported sufficiently by objective evidence or analysis. Ex. 1002 ¶ 201. In particular, Mr. Kuchel provides no calculations or reasoning to support the conclusion that including fluid passages in addition to the gaps would allow the peripheral frame to inflate more freely. *Id.*; Ex. 2003, 149:6–9, 154:3–19. Having weighed the competing testimony of Dr. Letton and Mr. Kuchel, we credit Dr. Letton's testimony as more persuasive evidence.

In view of the above, we are not persuaded that one of ordinary skill in the art would have been led to modify Metzger by including fluid passages in the side support beams in addition to the gaps between the ends of the side support beams.

Regarding the second theory, Petitioner argues that "[u]se of a single, continuous side support beam around the entire periphery of an air mattress, with fluid passages therethrough, would have been an obvious design choice, among multiple options, well within the skill of a [person having ordinary skill in the art]," and such a "solution would have been obvious to try." Pet. 75 (citing *KSR*, 550 U.S. at 416, 419–421). Petitioner also argues

that there are "several known advantages in using a single side support beam," including reduced bulging and increased support at the corners and uniform edges around the mattress. *Id.* at 76 (citing Ex. 1002 ¶¶ 84, 170–172, 201).

We agree with Patent Owner that one of ordinary skill in the art would not have been led to modify Metzger's four discrete side support beams to extend into and around the corners of the mattress so as to create a single, continuous support beam. *See* PO Resp. 46 (citing Ex. 2001 ¶¶ 140–142). Petitioner's argument relies in large part on the assertion that there were several known advantages gained by using a single side support beam. Pet. 76 (citing Ex. 1002 ¶¶ 84, 170–172, 201). Mr. Kuchel's testimony regarding the alleged advantages is derived from the disclosure of Wu. *See* Ex. 1002 ¶ 84 (citing Wu as disclosing flaws resulting from distinct band sections), ¶ 171 (citing Wu and Ex. 1002 ¶ 84), ¶ 201 (citing Ex. 1002 ¶ 84). For the reasons discussed below, however, we determine that Wu is not prior art with respect to the challenged claims. Accordingly, we do not credit Mr. Kuchel's testimony that reduced bulging, increased support at the corners, and uniform edges around the mattress were known advantages at the time of invention of the '555 patent. As such, we also disagree with Petitioner's argument that "[i]t was also known to have a continuous internal wall wrapping around a mattress perimeter." *See* Pet. Reply 17.

As for Petitioner's assertion that the proposed modification would have been "obvious to try," we note that Petitioner provides no explanation supporting the assertion. This unsupported, conclusory assertion does not satisfy Petitioner's burden of demonstrating obviousness. *See In re Magnum Oil Tools Int'l, Ltd.*, 829 F.3d 1364, 1380 (Fed. Cir. 2016) ("To satisfy its burden of proving obviousness, a petitioner cannot employ mere conclusory

statements. The petitioner must instead articulate specific reasoning, based on evidence of record, to support the legal conclusion of obviousness.”).

In view of the above, we determine that the limitation “said internal wall of said peripheral frame includes a fluid passage therethrough” of independent claims 1 and 6 (and thus dependent claims 2–5 and 7–9) is not obvious in view of Metzger. Accordingly, we are not persuaded that Petitioner has met its burden of showing, by a preponderance of the evidence, that independent claims 1–9 are obvious over Metzger.

F. Asserted Obviousness Based on Metzger and Wolfe

Petitioner contends claims 5 and 9 are obvious over Metzger and Wolfe. Pet. 76–79. Petitioner relies on Wolfe for disclosing the felt-like upper surface recited in claims 5 and 9. *Id.* at 77 (citing Ex. 1007, 2:16–19). Thus, von Wolfe does not overcome Metzger’s failure to teach or suggest the claimed internal wall having a fluid passage therethrough.

Accordingly, this ground suffers from the same deficiency noted above with respect to Metzger. Therefore, for the same reasons discussed above, we are not persuaded on the complete record before us that Petitioner has demonstrated, by a preponderance of the evidence, that claims 5 and 9 are unpatentable over the combination of Metzger and Wolfe.

G. Asserted Obviousness Relying on Wu

Petitioner contends claims 1–4 and 6–8 are obvious over Metzger and Wu and claims 5 and 9 are obvious over Metzger, Wu, and Wolfe. Pet. 79–86. Patent Owner provides arguments addressing these asserted grounds of unpatentability. PO Resp. 53–67.

1. Determination of Whether Wu is Prior Art

The ’555 patent issued from U.S. Patent Application No. 11/295,923, which was filed on December 7, 2005. Ex. 1001, code (21), code (22).

Petitioner asserts that Wu qualifies as prior art under 35 U.S.C. § 102(e). Pet. 35 n.2. Wu was filed on May 27, 2005, prior to the earliest effective filing date of the ’555 patent. Ex. 1009, code (22). Patent Owner contends that Wu is not prior art with respect to the ’555 patent because “Patent Owner designed, manufactured, and sold products employing each and every limitation of the Challenged Claims of the ‘555 Patent, including product number 92083 (the ‘92083 Product’), well before Wu’s May 2005 priority date” and can thus demonstrate “actual reduction to practice” prior to Wu’s priority date. PO Resp. 53. In support of its contentions, Patent Owner relies on the testimony of Dr. Letton, Mr. Lau, the inventor of the ’555 patent, Mr. Lu, and Mr. Demeo (Exs. 2004, 2006, 2015, 2016). *Id.* at 53–54.

To remove Wu as a prior art reference, the record must establish “either an earlier reduction to practice, or an earlier conception followed by a diligent reduction to practice.” *Purdue Pharma L.P. v. Boehringer Ingelheim GmbH*, 237 F.3d 1359, 1365 (Fed. Cir. 2001)). “Conception exists when a definite and permanent idea of an operative invention, including every feature of the subject matter sought to be patented, is known.” *Sewall v. Walters*, 21 F.3d 411, 415 (Fed. Cir. 1994). Objective evidence that corroborates an inventor’s testimony regarding the conception of the invention is required “because of the danger in post-hoc rationales by an inventor claiming priority.” *Invitrogen Corp. v. Clontech Labs., Inc.*, 429 F.3d 1052, 1065 (Fed. Cir. 2005). The sufficiency of corroboration is determined according to a “rule of reason.” *Price v. Symsek*, 988 F.2d 1187, 1195 (Fed. Cir. 1993). Under the rule of reason, “all pertinent evidence is examined in order to determine whether the inventor’s story is credible.” *Fleming v. Escort Inc.*, 774 F.3d 1371, 1377 (Fed. Cir. 2014) (quoting *Sandt*

Tech., Ltd. v. Resco Metal & Plastics Corp., 264 F.3d 1344, 1350 (Fed. Cir. 2001)).

To establish an actual reduction to practice, as opposed to the constructive reduction to practice that occurs when a patent application is filed, a party must establish that: (1) the inventor constructed an embodiment or performed a process that satisfies every element of the claim at issue; and (2) the inventor determined that the invention would work for its intended purpose. *E.I. du Pont De Nemours & Co. v. Unifrax I LLC*, 921 F.3d 1060, 1075 (Fed. Cir. 2019). The same requirement for evidence that corroborates inventor testimony on conception under the rule of reason also applies to the reduction to practice determination. *Id.* at 1076.

Petitioner bears the burden of persuasion that the challenged claims are unpatentable, which includes the burden of establishing that any reference upon which it relies constitutes prior art under 35 U.S.C. § 102. *See* 35 U.S.C. § 316(e); *Mahurkar v. C.R. Bard, Inc.*, 79 F.3d 1572, 1576 (Fed. Cir. 1996) (holding that the challenger "bore the burden of persuasion . . . on all issues relating to the status of [the asserted reference] as prior art"). However, because Petitioner initially offered Wu, which qualifies on its face as prior art under § 102(e), into evidence, Patent Owner bears the subsequent procedural burden of producing evidence antedating Wu. *See Dynamic Drinkware*, 800 F.3d at 1378–80; *In In re Magnum Oil Tools Int'l, Ltd.*, 829 F.3d 1364, 1375 (Fed. Cir. 2016)). Although the burden of production can be a shifting burden, we note that the burden of persuasion is on Petitioner to ultimately prove "unpatentability by a preponderance of the evidence," and that this burden never shifts to Patent Owner. *Dynamic Drinkware*, 800 F.3d at 1378.

a) Patent Owner's Arguments

Patent Owner relies in large part on testimony of Mr. Lau and Mr. Lu in arguing that the 92083 Product was designed, manufactured, tested, and sold before Wu's filing date of May 27, 2005. PO Resp. 56–58. Mr. Lau testifies that on or about December 15, 2004, he conceived of an inflatable mattress design that was subsequently disclosed and claimed in the '555 patent. Ex. 2005 ¶ 8. Mr. Lau recalls making sketches of the mattress design at the time of conception but now is unable locate the sketches. *Id.* Mr. Lau states that he believes the sketches were discarded after the mattress design was constructed. *Id.* Mr. Lau further testifies he constructed a working prototype of the air mattress design by at least December 22, 2004. *Id.* ¶ 9. Consistent with Mr. Lau's testimony, Mr. Lu testifies that he recalls Mr. Lau developing a new air mattress design and constructing a working prototype of the design by at least December 22, 2004. Ex. 2015 ¶ 4. Mr. Lu testifies that he was an employee of Sun Pleasure Co. Ltd., an affiliate of Ideal Time, during this time and regularly worked with Mr. Lau. *Id.* ¶ 2; *see also* Ex. 2005 ¶ 9 (Mr. Lau testifying that "Mr. Lu was employed at Sun Pleasure as a Customer Account Manager, who managed Walmart and Sam's Club business accounts for Sun Pleasure").

Next, Mr. Lau testifies that Exhibit 2006 is a true and correct copy of an email among himself, Mr. Lu, and James Yu[9] that included an attachment depicting the prototype. Ex. 2005 ¶ 9. Mr. Lau states that Exhibit 2006

[9] "Mr. Yu was employed by Pleasure Time Products (HK) Ltd as a Production Manager and Zhongshan Pleasure Time Plastic Industrial Ltd in Zhongshan City, China, a company that provided testing and manufacturing services, and was a subsidiary of Pleasure Time Products (HK) Ltd." Ex. 2005 ¶ 9.

shows: (1) that the prototype was constructed no later than December 22, 2004; (2) the external appearance of the prototype; and (3) the proper functioning of the prototype. *Id.* ¶ 10. Mr. Lu testifies that he recalls receiving the email in Exhibit 2006 and that Exhibit 2006 is a true and correct copy of the email. Ex. 2015 ¶ 4. Mr. Lau also testifies that he successfully tested the prototype by at least December 21, 2004 and "determined that it would function as intended by inflating the Prototype and confirming that it inflated to the intended shape, maintained such shape after inflation, supported sufficient body weight while inflated, and properly deflated." Ex. 2005 ¶ 11.

Both Mr. Lau and Mr. Lu testify that, once the prototype was ready, Mr. Lu contacted representatives of Walmart on December 22, 2004 via an email offering to send a sample of the newly designed air mattress and Exhibit 2007 is a true and correct copy of that email. Ex. 2005 ¶¶ 12–13; Ex. 2015 ¶¶ 5–6. Both witnesses also testify that the newly designed air mattress was assigned the product number 92083, which is shown in Exhibit 2007. Ex. 2005 ¶ 13; Ex. 2015 ¶ 6.

Mr. Lau then testifies that Walmart agreed to purchase the 92083 Product and that Exhibit 2008 is a true and correct copy of an email reflecting Walmart's agreement. Ex. 2005 ¶ 14. Mr. Lau also testifies that Exhibit 2008 includes attachments to the email reflecting the product number revisions to be made to the relevant purchase orders and a mock-up of the product box (as referred to as a "color box") for the 92083 Product. *Id.* ¶¶ 14–15. Also, Mr. Lau testifies that Exhibit 2009 is a true and correct copy of a December 27–29, 2004, email string among himself, Mr. Lu, and several Walmart representatives attaching the relevant purchase orders.

updated to reflect the new 92083 Product. *Id.* ¶ 16. Mr. Lu provides testimony that is consistent with Mr. Lau's testimony. Ex. 2015 ¶¶ 7–9.

Mr. Lau also testifies regarding steps taken to test the 92083 Product. Ex. 2005 ¶¶ 17–20. This included a pre-production independent quality assurance test of the 92083 Product by Consumer Testing Laboratories (Fair East) Ltd. ("CTL"), a provider of quality assurance testing services for the retail industry located in Hong Kong, China. *Id.* ¶ 17. A report was received from CTL on December 30, 2004, indicating that the 92083 Product "had passed the testing and would work for its intended purpose." *Id.* Mr. Lau testifies that Exhibit 2010 is a true and correct copy of an email among himself, Mr. Lu, Mr. Yu, and several Walmart representatives attaching the pre-production testing report from CTL. *Id.* After beginning a mass manufacturing run of the 92083 Product, a second independent quality assurance test of the 92083 Product was conducted by CTL. *Id.* ¶ 19. A report for this second test was received from CTL on January 6, 2005, indicating that the 92083 Product "had passed the testing and would work for its intended purpose." *Id.* Mr. Lau testifies that Exhibit 2011 is a true and correct copy of an email among himself, Mr. Lu, Mr. Yu, and several Walmart representatives attaching the second testing report. *Id.* Mr. Lu provides testimony that is consistent with Mr. Lau's testimony. Ex. 2015 ¶¶ 10–13.

Next, Mr. Lau testifies that Walmart released its hold on the relevant purchase orders after receiving the second testing report. Ex. 2005 ¶ 21. At that time, Patent Owner or an affiliate commissioned production of the product box for the 92083 Product. *Id.* ¶ 22. Mr. Lau testifies that Exhibit 2012 is a true and correct copy of four delivery receipts for the packaging. *Id.* Again, Mr. Lu provides consistent testimony. Ex. 2015 ¶¶ 13–14.

In addition, Mr. Lau testifies that "Exhibit 2013 is a true and correct copy of a photograph of a sample from the first mass production run of the 92083 Product, which was taken at the manufacturing facility in Zhongshan City, China on January 7, 2005," and "Exhibit 2014 is a true and correct copy of the photograph of Exhibit 2013, along with the metadata related thereto, which evidences that the photograph was taken on January 7, 2005." Ex. 2005 ¶¶ 25–26. Patent Owner argues that Exhibit 2013 shows the external features of the 92083 Product as claimed in the '555 patent. PO Resp. 57 (citing Ex. 2005 ¶¶ 25–26; Ex. 2013; Ex. 2014; Ex. 2015 ¶ 16).

In view of the above, Patent Owner argues that "the 92083 Product was designed, manufactured, successfully tested, and sold at least to Walmart all well before Wu's May 27, 2005 filing date." PO Resp. 58. Patent Owner then argues that the 92083 Product included each and every limitation of claims 1–9 of the '555 patent such that the production of the 92083 Product demonstrates actual reduction to practice of the challenged claims prior to May 27, 2005, thereby disqualifying Wu as prior art. *Id.* (citing *Medichem, S.A. v. Rolabo, S.L.*, 437 F.3d 1157, 1169 (Fed. Cir. 2006)).

Patent Owner provides a limitation-by-limitation analysis asserting that the 92083 Product included each limitation of claims 1–9. *Id.* at 58–63. These arguments primarily rely on testimony from Mr. Lau and Dr. Letton, as well as Exhibit 2004 (discussed below). *Id.* For limitations not pertaining to internal structure, these arguments also rely on Mr. Lu's testimony and Exhibits 2008 and 2013. *Id.*

Mr. Lau testifies that, as sole inventor of the '555 patent, he is intimately familiar with the patent's claimed features and their use in the 92083 Product. Ex. 2005 ¶ 24. Mr. Lau then testifies, on a limitation-by-

limitation basis, that the 92083 Product included every limitation of claims 1–9, referring to an annotated version of the photograph from Exhibit 2013 as showing external features of the 92083 Product. *Id.* ¶¶ 27–49.

In addition to Mr. Lau's testimony, Patent Owner's arguments regarding the internal structure of the claimed mattress largely depend on an air mattress obtained in 2020 and Dr. Letton's related testimony. PO Resp. 63–67. Mr. Lau testifies that he was unable to locate a sample of the 92083 Product in Patent Owner's storage or manufacturing locations, but he found "a single unit of the 92083 Product on amazon.com," referred to as the "92083 Specimen," and asked his colleague and business partner, Derek J. Demeo, to purchase the 92083 Specimen. Ex. 2005 ¶¶ 51–52.

Patent Owner contends that Mr. Demeo did obtain the 92083 Specimen in December 2020, and sent the 92083 Specimen to Dr. Letton on April 27, 2021. PO Resp. 63–64 (citing Ex. 2005 ¶¶ 51–55; Ex. 2016 ¶¶ 2–7; Exs. 2017–2019). Patent Owner asserts that "Dr. Letton received the 92083 Specimen the next day and opened the package, confirming it had arrived undamaged and appeared factory sealed." *Id.* at 64 (citing Ex. 2001 ¶ 170; Ex. 2005 ¶ 56; Ex. 2016 ¶ 8; Ex. 2020). Next, Dr. Letton photographed all six sides of the product box and the exterior of the inflated mattress. *Id.* (citing Ex. 2001 ¶ 170; Ex. 2021).

Patent Owner argues that "Mr. Lau and Mr. Lu reviewed such photos and they both confirmed that the appearances of the product box and the mattress agree with their recollections of the color box and mattress for the 92083 Product produced and sold in January 2005." *Id.* (citing Ex. 2005 ¶¶ 56–61; Ex. 2015 ¶¶ 16–17). Patent Owner adds that comparing Dr. Letton's photographs to the mock-up of the product box created for the 92083 Product in December 2004, shows that the 92083 Specimen's product

box has the same layout, coloring, photos, and labeling (including the 92083 product number) as the mock-up. *Id.* at 64–65 (citing Ex. 2021, 1–7; Ex. 2008, 7). Moreover, Patent Owner argues that Mr. Lau and Mr. Lu both testify that "Patent Owner and its affiliates only use a given product number for one product design, they do not reuse a product number for a different design, and the design of the 92083 Product never changed after its initial creation in December 2004." *Id.* at 65 (citing Ex. 2005 ¶¶ 13, 60; Ex. 2015 ¶ 6.) Thus, Patent Owner asserts that "the 92083 Specimen obtained on behalf of Patent Owner and inspected by Dr. Letton is an accurate example of the original 92083 Product as of December 2004." *Id.*

Next, Patent Owner argues that Dr. Letton inspected the 92083 Specimen and confirmed that it included all limitations of the challenged claims. *Id.* at 65–66. Dr. Letton testifies that he "analyzed the 92083 Specimen and compared it to the Challenged Claims and have determined that each and every feature of the Challenged Claims is present in the 92083 Specimen." Ex. 2001 ¶ 166; *see also id.* ¶ 169 ("I have examined the 92083 Specimen and it is my opinion that it includes each and every limitation of at least the Challenged Claims of the '555 Patent."). More specifically, Dr. Letton testifies that he observed that exterior of the 92083 Specimen and confirmed the presence of the external features. *Id.* ¶ 173. He then inspected the interior of the 92083 Specimen by taking photographs with a fiber optic camera. *Id.* ¶¶ 174–175. These interior photographs are included in Exhibit 2004. *Id.* ¶ 174. Dr. Letton testifies that Exhibit 2004 is a claim chart that compares claims 1–9 to the 92083 Specimen and includes his opinions on each of the challenged claims. *Id.* ¶¶ 171, 176. Based on his inspection and observations, Dr. Letton again opines that "the 92083 Specimen includes each and every element of the Challenged Claims." *Id.*

¶ 176; *see also id.* ¶¶ 177–186 (providing a limitation-by-limitation analysis of claims 1–9).

In view of the above, Patent Owner argues that it "has thus demonstrated, with corroborating evidence, that a physical product operable as intended and meeting all the limitations of the Challenged Claims of the '555 Patent was actually reduced to practice before Wu's May 27, 2005 filing date," thereby disqualifying Wu as prior art. PO Resp. 66–67 (citing *Medichem*, 437 F.3d at 1169).

b) Petitioner's Arguments

Petitioner first argues that Patent Owner has not provided any contemporaneous document or physical prototype that shows or describes the 92083 Product's internal structure. Pet. Reply 20 (citing Exs. 2001–2023). According to Petitioner, of the evidence provided by Patent Owner, "*not one document* shows or describes the claimed 'internal wall' or any other internal structure of the 92083 Product as it existed in 2004." *Id.* at 21 (citing Exs. 2006–2023). Petitioner contends that "[t]he *only 'evidence'* [Patent Owner] offers from 2004/2005 regarding the internal structure is *uncorroborated* inventor testimony." *Id.* (citing Ex. 2005 ¶¶ 8–9, 24–50).

Second, Petitioner argues that Mr. Lau's testimony is not *independently* corroborated. *Id.* at 23. For instance, Petitioner argues that Mr. Lu's declaration is not independent because it omits that he is Mr. Lau's brother-in-law, which was revealed only during Mr. Lu's deposition. *Id.* (citing Ex. 1018, 13:6–14). Petitioner also argues that Mr. Lu admits to having no independent knowledge of the internal structure of the 92083 Product. *Id.* at 23–24 (citing Ex. 1018, 19:22–20:3, 21:16–22:3, 23:24–24:4, 45:24–46:4, 78:3–18). In addition, Petitioner argues that Mr. Demeo's declaration is not independent because it fails to mention that Mr. Demeo

and Mr. Lau co-own a company that sells products covered by the ’555 patent. *Id.* at 25 (citing Ex. 2016; Ex. 1016, 54:7–55:4).

Third, Petitioner argues that Patent Owner’s reliance on the 92083 Specimen is misplaced because the only link between the 92083 Specimen and the 92083 Product “is the naked assertion by Messrs. Lau and Lu, without documentary proof, that all products identified by ‘92083’ had the same design and construction, and that the design of the 92083 product *never changed* after its initial creation in December 2004.” *Id.* (citing Ex. 2005 ¶ 13; Ex. 2015 ¶ 6).

Moreover, Petitioner argues that the photographs in Exhibits 2006, 2007, and 2013 undermines the testimony that the design of the 92083 Product never changed after its initial creation. *Id.* at 25–26. According to Petitioner, the photographs of Patent Owner’s prototype from December 2004 show one valve on the top surface near the foot of the mattress, but the photograph of the 92083 Product from January 2005 shows no valve on the top surface near the foot of the mattress. *Id.* at 26 (citing Ex. 2006, 9–10; Ex. 2007, 3; Ex. 2013, 1). Petitioner also argues that the photographs taken in 2021 by Dr. Letton of the 92083 Specimen show two valves on the top surface near the foot of the air mattress, which Dr. Letton calls “burp valves.” *Id.* (citing Ex. 2001 ¶ 170; Ex. 2021, 16-18; Ex. 1017, 156:19–157:16). Thus, Petitioner asserts that “[t]hese various products clearly embody different design modifications though each is identified by the same ‘92083’ product number.” *Id.*

Fourth, Petitioner points to Exhibit 2008, which is a copy of the December 27, 2004, email reflecting Walmart’s agreement to purchase the 92083 Product. *Id.* at 27–28. Petitioner argues that this email identified specific design differences between the prior product supplied to Walmart

and the 92083 Product, but did not identify the internal wall as one of the design differences and, thus, fails to corroborate that the 92083 Product had the internal wall. *Id.* at 28. Petitioner also argues that this email discussed an increase of PVC use, but Dr. Lau testified that the invention would lead to a decreased use of PVC. *Id.* at 28–29 (citing Ex. 2008, 1; Ex. 1016, 174:2–175:7).

Last, Petitioner asserts that the Lu and Lau declarations are entitled to little or no weight. *Id.* at 29–31. In support of this assertion, Petitioner argues that the declarations were initially drafted entirely by their attorneys, Mr. Lau and Mr. Lu did little to change the substance of the drafts, and the declarations are identical in key parts. *Id.* (citing Ex. 1016, 36:5–7, 42:11–44:22; Ex. 1018, 16:15–20, 21:16–23, 22:18–23:23; Ex. 1025; Ex. 1026).

c) Discussion

We first address Petitioner's arguments that the Lu and Lau declarations are entitled to little or no weight, which we find unpersuasive. Instead, we agree with Patent Owner that consistencies between the two declarations should be no surprise because both witnesses were authenticating the same documents. *See* PO Sur-reply 24–25 (citing *LKQ Corp. v. GM Global Tech. Ops. LLC*, IPR2020-00821, Paper 34 at 40–42 (PTAB Mar. 5, 2013)). Furthermore, apart from the similarity, no facts presented by Petitioner indicate that Patent Owner's counsel rather than Mr. Lau and Mr. Lu were responsible for the substantive content of their declarations. Petitioner argues that Mr. Lu did not speak with Patent Owner's counsel until months after submitting his declaration. Pet. 30 (citing Ex. 1018, 16:15–20). But Mr. Lu also states that he reviewed and

revised a draft of the declaration and it matched his memory to the best of his knowledge. Ex. 1018, 19:13–20:10.

We also agree with Patent Owner that Petitioner cites no authority for its position that Mr. Lu's testimony should be disregarded because he is Mr. Lau's brother-in-law. *See* PO Sur-reply 25. As for Petitioner's argument that Mr. Lu has no independent knowledge of the internal structure of the 92083 Product, we are not aware of—or at least do not rely on—any testimony from Mr. Lu directed to the internal structure of the 92083 Product. Accordingly, we determine that the Lu and Lau declarations are entitled to weight.

We now turn to Patent Owner's contentions. As discussed above, Mr. Lau, the inventor of the '555 patent, testifies that he conceived of an inflatable mattress design that, in the form of the 92083 Product, was actually reduced to practice before May 27, 2005. Ex. 2005 ¶¶ 8–23. Mr. Lu corroborates Mr. Lau's testimony regarding the development, testing, manufacturing, and selling of the 92083 Product. Ex. 1015 ¶¶ 4–17. Mr. Lau's testimony regarding the development, testing, manufacturing, and selling of the 92083 Product is also corroborated by documentary evidence from before May 27, 2005, such as emails, photographs, purchase orders, and test reports. *See* Exs. 2006–2014. Upon reviewing the totality of the evidence, we determine that Mr. Lau's testimony on this point is adequately corroborated and rendered credible.

Mr. Lau also testifies that the 92083 Product included all the limitations of claims 1–9. *Id.* ¶¶ 24–49. For limitations pertaining to the external features of the mattress recited in claims 1–9, Mr. Lau's testimony is corroborated by the photographs in Exhibits 2006–2008 and 2013 and Mr. Lu's testimony (*see* Ex. 1015 ¶¶ 16). Having considered the evidence

and arguments of record, we determine Mr. Lau's testimony that the 92083 Product included all the limitations of claims 1–9 pertaining to the external features of the mattress is adequately corroborated and rendered credible.

With respect to the internal features of the mattress recited in claims 1–9, Patent Owner's contention that Mr. Lau's testimony is corroborated sufficiently turns on whether the 92083 Specimen is the same as the 92083 Product, or, in other words, on whether the 92083 Specimen is one of the products produced by Patent Owner prior to May 27, 2005. Patent Owner argues that the 92083 Specimen is an accurate example of the 92083 Product because both are identified with the 92083 product number, and Mr. Lau and Mr. Lu both testify that a given product number is used for only one product design and a product number is not reused for a different design. PO Resp. 64–65 (citing Ex. 2021, 1–7; Ex. 2008, 7; Ex. 2005 ¶¶ 13, 56–61; Ex. 2015 ¶¶ 6, 16–17).

As discussed above, Petitioner disputes the contention that the design of the 92083 Product never changed after its initial creation, arguing that the photographs of Patent Owner's prototype from December 2004 show one valve on the top surface near the foot of the mattress, but the photograph of the 92083 Product from January 2005 shows no valve on the top surface near the foot of the mattress. Pet. Reply 25–26 (citing Ex. 2006, 9–10; Ex. 2007, 3; Ex. 2013, 1). Petitioner also argues that the photographs taken in 2021 by Dr. Letton of the 92083 Specimen show two valves on the top surface near the foot of the air mattress, which Dr. Letton calls "burp valves." *Id.* (citing Ex. 2001 ¶ 170; Ex. 2021, 16-18; Ex. 1017, 156:19–157:16).

Patent Owner responds to these contentions by arguing that Petitioner never asked Dr. Lau about the photograph of the 92083 Product from

January 2005, and Dr. Letton explained that the low resolution of the photograph could explain the lack of appearance of the features. PO Sur-reply 24 (citing Ex. 1017, 161:13–16)[10].

Based on our review of the photographs of Patent Owner's prototype from December 2004 and the photograph of the 92083 Product from January 2005, we conclude that there do appear to be differences, albeit relatively minor differences, between the prototype and the 92083 Product. *Compare* Ex. 2006, 3, 9–10, *with* Ex. 2013, 1. As such, although we do not discount it entirely, Patent Owner's argument that the 92083 Specimen is an accurate example of the 92083 Product based on both having the same product number is not particularly strong.

This evidence, however, is not the only evidence on this issue before us. Patent Owner also argues that "Mr. Lau testified that April 25, 2005 was the last ship date for all 92083 products." PO Sur-reply 21 (citing Ex. 1016, 58:10–59:12). Patent Owner adds that "[e]ach and every purchase order in Exhibit 2009, authenticated by Mr. Lau and Mr. Lu, are consistent with these dates, as is the summary chart in Exhibit 2008." *Id.* We agree that Mr. Lau testified that the last shipment date for the 92083 Product was April 25, 2005, and this testimony is corroborated by Exhibits 2008 and 2009. Ex. 1016, 58:10–59:12; Ex. 2008, 6; 2009, 4–66. Counsel for Petitioner argued at the oral hearing that the last shipment of the 92083 Product was to Sam's Club or Walmart, but the 92083 Specimen was purchased from an unknown third party and is thus unreliable. Tr. 56:19–57:1. This argument, however, is not persuasive because it is primarily speculation that the 92083

[10] Although Patent Owner actually cites to "Ex. 1017, 13–16," this is apparently a typographical error that we believe was intended to refer to lines 13–16 on page 161 of Exhibit 1017.

Specimen was never shipped to Walmart. As this point, we find the 92083 Specimen having the same product number and packaging as the 92083 Product (as testified to by Mr. Lau and corroborated by Mr. Lu and Exhibits 2006–2009, 2018, 2019, and 2021) gives credence, under a rule of reason framework, to the assertion that the 92083 Specimen was shipped to Walmart on or before April 25, 2005.

Having determined that the 92083 Specimen predates Wu, we disagree with Petitioner's arguments that Patent Owner has not provided any contemporaneous evidence regarding the internal structure other than uncorroborated inventor testimony. *See* Pet. 20–21. Instead, we have considered Dr. Letton's testimony that the 92083 Specimen includes all limitations of the challenged claims (which Petitioner does not challenge directly), as well as the claim chart in Exhibit 2004, and conclude that this evidence is persuasive. Thus, we determine Mr. Lau's testimony that the 92083 Product included all the limitations of claims 1–9 pertaining to the internal features of the mattress is adequately corroborated and rendered credible.

Upon reviewing the totality of the evidence, as discussed in detail above, we determine that Mr. Lau's testimony is adequately corroborated and rendered credible. Accordingly, under the rule of reason, we determine that the evidence establishes that the invention of claims 1–9 was actually reduced to practice prior to May 27, 2005. Although Patent Owner does not establish adequately that the mattress design conceived by Mr. Lau met all limitations of claims 1–9, "[w]here an inventor is unable to establish conception until he has reduced the invention to practice through a successful experiment, simultaneous conception and reduction to practice

occur." *Purdue Pharma*, 237 F.3d at 1366 (citing *Amgen, Inc. v. Chugai Pharm. Co.,* 927 F.2d 1200, 1206 (Fed.Cir.1991)).

For the above reasons, we determine that Petitioner has not met its burden of proving, by a preponderance of the evidence, that Wu is prior art with respect to the challenged claims.

2. Conclusion on Obviousness

Because Wu is not prior art to the '555 patent, Petitioner has not demonstrated that any of claims 1–9 would have been obvious over the combination of Metzger and Wu or the combination of Metzger, Wu, and Wolfe.

H. Motion to Exclude Evidence

Patent Owner moves to exclude Exhibit 1021 and paragraphs 40–43 and 62 of Exhibit 1015. Paper 32, 1. Although we may have explicitly or implicitly referenced these exhibits when recounting or addressing the parties' arguments, we do not rely on any of the exhibits as a basis to make any findings adverse to Petitioner in this Decision. For example, we considered paragraphs 40–43 of Exhibit 1015 as part of Petitioner's arguments based on the Coleman Airbed, and found the arguments lacking even with those paragraphs in evidence. We, therefore, dismiss Petitioner's Motion to Exclude as moot.

III. CONCLUSION

In summary:

Claims	35 U.S.C. §	Reference(s)/Basis	Claims Shown Unpatentable	Claims Not shown Unpatentable
1–4, 6–8	102	Metzger		1–4, 6–8
1–4, 6–8	103	Metzger		1–4, 6–8
5, 9	103	Metzger, Wolfe		5, 9
1–4, 6–8	103	Metzger, Wu		1–4, 6–8

5, 9	103	Metzger, Wu, Wolfe		5, 9
Overall Outcome				1–9

IV. ORDER

In consideration of the foregoing, it is hereby:

ORDERED that claims 1–9 of U.S. Patent No. 7,353,555 B2 are not determined to be unpatentable;

FURTHER ORDERED that Patent Owner's Motion to Exclude is *dismissed*;

FURTHER ORDERED that the case caption for this proceeding is changed to identify as Patent Owner as reflected on the first page of this Decision; and

FURTHER ORDERED that, because this is a Final Written Decision, parties to the proceeding seeking judicial review of the decision must comply with the notice and service requirements of 37 C.F.R. § 90.2.

FOR PETITIONER:

Bryan Lempia
Shaun Hawkinson
Christopher Lee
Brian Haan
LEMPIA SUMMERFIELD KATZ LLC
blempia@lsk-iplaw.com
shawkinson@lsk-iplaw.com
clee@leesheikh.com
bhaan@leesheikh.com

FOR PATENT OWNER:

Fritz Schweitzer
Stephen Zimowski
ST. ONGE STEWARD JOHNSON & REENS LLC
Fschweitzer3@ssjr.com
szimowski@ssjr.com