Trials@uspto.gov
571-272-7822

Paper 8
Date: October 29, 2021

UNITED STATES PATENT AND TRADEMARK OFFICE

BEFORE THE PATENT TRIAL AND APPEAL BOARD

INTEL CORPORATION,
Petitioner,

v.

DEMARAY LLC,
Patent Owner.

IPR2021-01030
Patent 7,544,276 B2

Before CHRISTOPHER L. CRUMBLEY, KRISTINA M. KALAN, and KIMBERLY McGRAW, *Administrative Patent Judges*.

KALAN, *Administrative Patent Judge*.

DECISION
Granting Institution of *Inter Partes* Review
35 U.S.C. § 314

Granting Petitioner's Unopposed Motion for Joinder
35 U.S.C. § 315(c); 37 C.F.R. § 42.122

I. INTRODUCTION

Intel Corporation ("Petitioner") filed a Petition (Paper 2, "Pet.") requesting an *inter partes* review of claims 1–13 of U.S. Patent No. 7,544,276 B2 (Ex. 1001, "the '276 patent"). Petitioner also filed a Motion for Joinder (Paper 4, "Mot."), seeking to join as a party to *Applied Materials, Inc. v. Demaray LLC*, IPR2021-00103 (the "Applied IPR"). Demaray LLC ("Patent Owner") did not file a Preliminary Response to the Petition or an opposition to the Motion for Joinder.

To institute an *inter partes* review, we must determine that the information presented in the Petition shows "there is a reasonable likelihood that the petitioner would prevail with respect to at least 1 of the claims challenged in the petition." 35 U.S.C. § 314(a). If we determine that a party has filed a petition that warrants institution of an *inter partes* review, we may join that party to another instituted *inter partes* review. 35 U.S.C. § 315(c). For the reasons discussed below, after considering the parties' submissions and the evidence of record, we determine that Petitioner has demonstrated a reasonable likelihood of prevailing with respect to at least one claim of the '276 patent. Thus, we institute an *inter partes* review. We also join Petitioner as a party to the Applied IPR.

At this preliminary stage of the proceeding, we have not made a final determination as to the patentability of any challenged claim or any factual or legal issue underlying the patentability inquiry. Any final determination will be based on the record developed during trial.

A. Related Proceedings

Petitioner identifies IPR2021-00103 as another proceeding involving the '276 patent. Pet. 2. Petitioner also identifies *Demaray LLC v. Samsung Electronics Co., Ltd.*, No. 6-20-cv-00636 (W.D. Tex.); *Demaray LLC v.*

Intel Corporation, No. 6-20-cv-00634 (W.D. Tex.); and *Applied Materials, Inc. v. Demaray LLC*, No. 5-20-cv-09341 (N.D. Cal.) as related matters. *Id*. Each of these proceedings involves the ’276 patent. *Id.*

B. Real Parties-In-Interest

Petitioner identifies Intel Corporation, Applied Materials, Inc. (“Applied Materials”), Samsung Electronics Co., Ltd., Samsung Electronics America, Inc., Samsung Semiconductor, Inc., and Samsung Austin Semiconductor, LLC, as real parties-in-interest. Pet. 2.

C. The ’276 Patent

The ’276 patent, titled “Biased Pulse DC Reactive Sputtering of Oxide Films,” relates to “deposition of oxide and oxynitride films and, in particular, to deposition of oxide and oxynitride films by pulsed DC reactive sputtering.” Ex. 1001, code (54), 1:12–14. The ’276 patent discloses that typically, radio frequency (“RF”) sputtering has been used for deposition of oxide dielectric films, but arcing can occur between sputtering target tiles used to make such films, which causes contamination of the deposited films. *Id.* at 2:25–30. The ’276 patent further states that reactors for RF sputtering, particularly their power systems, are complicated. *Id.* at 2:30–38. The ’276 patent discloses that reactive DC magnetron sputtering of nonconductive oxides “is done rarely” because insulating surfaces accumulate charge during deposition and result in arcing, which “can damage the power supply, produce particles and degrade the properties of deposited oxide films.” *Id.* at 4:44–52.

Figure 1A of the ’276 patent is reproduced below.

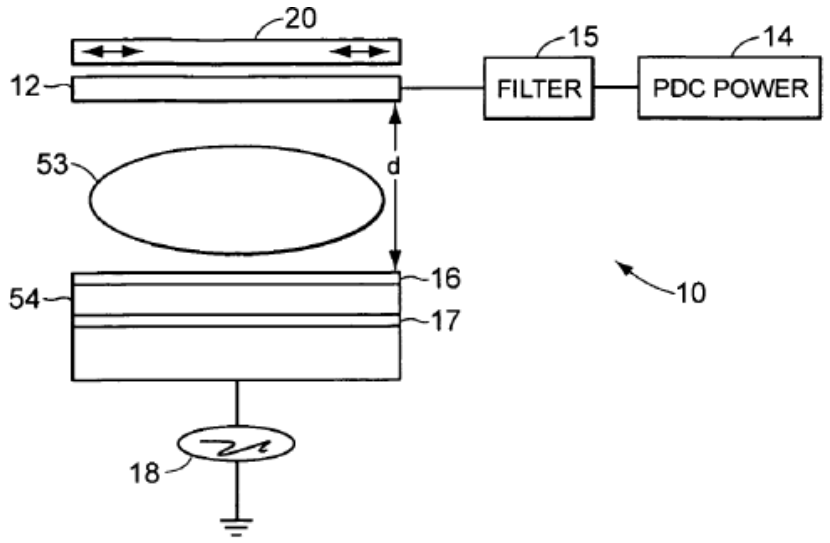

FIG. 1A

Figure 1A depicts a pulsed DC sputtering reactor. *Id.* at 3:26–27. The ’276 patent describes reactor apparatus 10 for sputtering of material from target 12. *Id.* at 5:7–9. Magnet 20 is scanned across the top of target 12, which reduces local erosion of target 12 during sputtering. *Id.* at 5:28–29, 8:47–55. Substrate 16 is opposite and parallel to target 12. *Id.* at 5:23–24. Substrate 16 is capacitively coupled to electrode 17 via insulator 54. *Id.* at 5:26–27. Electrode 17 can be coupled to RF power supply 18. *Id.* at 5:27–28. The ’276 patent explains that columnar structures in a deposited film can be detrimental for optical wave guide applications, but applying an RF bias on substrate 16 during deposition can substantially eliminate columnar structures. *Id.* at 5:60–67. The ’276 patent discloses that target 12 functions as a cathode when power is applied to it, which creates plasma 53. *Id.* at 5:24–26.

Target 12 is electrically coupled through filter 15 to pulsed DC power supply 14. *Id.* at 5:19–20. The ’276 patent discloses that the polarity of the power supplied to target 12 by the pulsed DC power supply 14 oscillates

between negative and positive potentials. *Id.* at 5:30–33. According to the ’276 patent, the insulating layer on the surface of target 12 discharges during the positive period, which prevents arcing. *Id.* at 5:33–35. The ’276 patent discloses that the pulsing frequency must exceed a critical frequency, which depends on a target material, cathode current, and reverse time. *Id.* at 5:35–37.

Reactor apparatus 10 further includes filter 15, which prevents RF power supply 18 from coupling into pulsed DC power supply 14. *Id.* at 5:50–51. According to the ’276 patent, filter 15 can be a 2 MHz band rejection filter when a 2 MHz power supply is used for RF power supply 18. *Id.* at 5:51–55. The ’276 patent discloses that “the band width of the filter 15 can be approximately 100 kHz.” *Id.* at 5:55–57.

D. Illustrative Claim

Claims 1 and 6 of the ’276 patent are independent. Claim 1 is representative and is reproduced below:

> 1. A reactor according to the present invention, comprising:
> a target area for receiving a target;
> a substrate area opposite the target area for receiving a substrate;
> a pulsed DC power supply coupled to the target area, the pulsed DC power supply providing alternating negative and positive voltages to the target;
> an RF bias power supply coupled to the substrate; and
> a narrow band-rejection filter that rejects at a frequency of the RE[1] bias power supply coupled between the pulsed DC power supply and the target area.

[1] This appears to be a typographical error that should read “RF” instead of “RE.” A district court may “correct an error in a patent by interpretation of the patent where no certificate of correction has been issued . . . only if (1) the correction is not subject to reasonable debate based on consideration of the claim language and the specification and (2) the prosecution history

Ex. 1001, 22:40–50.

E. The Asserted Grounds of Unpatentability

Petitioner contends that claims 1–13 of the '276 patent are unpatentable on the following grounds. Pet. 3–5.

References	Basis	Claim(s) Challenged
Barber,[2] Hirose[3]	§ 103[4]	1–3, 6–8
Barber, Hirose, Aokura[5]	§ 103	4, 5
Barber, Hirose, Yamazaki[6]	§ 103	9
Barber, Hirose, Dogheche[7]	§ 103	9, 10

does not suggest a different interpretation of the claims." *Novo Indus., LP v. Micro Molds Corp.*, 350 F.3d 1348, 1354 (Fed. Cir. 2003); *see also Fitbit, Inc. v. Valencell, Inc.*, 964 F.3d 1112, 1119–20 (Fed. Cir. 2020) (suggesting the standard from *Novo* extends to corrections the Board may make in post-grant proceedings, and holding it was error to not correct a "conspicuous" and undisputed error related to antecedent basis). We have applied this same standard in our proceedings. *E.g.*, *Apple Inc. v. Achates Reference Publ'g, Inc.*, IPR2013-00080, Paper 22 at 10–12 (PTAB June 3, 2013).

[2] US 6,342,134 B1, issued Jan. 29, 2002 (Ex. 1005).

[3] US 6,485,602 B2, issued Nov. 26, 2002 (Ex. 1006).

[4] The Leahy-Smith America Invents Act, Pub. L. No. 112-29, 125 Stat. 284 (2011) ("AIA"), amended 35 U.S.C. § 103. Because the '276 patent has an effective filing date prior to the effective date of the applicable AIA amendments, we refer to the pre-AIA versions of § 103.

[5] JP H10102247 A, published Apr. 21, 1998 (Ex. 1068) (English translation (pp. 1–12); Verified Statement of Translation (p. 13); Japanese language document (pp. 14–24)).

[6] US 6,657,260 B2, issued Dec. 2, 2003 (Ex. 1046).

[7] E. Dogheche, *Growth and optical characterization of aluminum nitride thin films deposited on silicon by radio-frequency sputtering*, Appl. Phys. Lett. 74, 1209 (1999) (Ex. 1029).

References	Basis	Claim(s) Challenged
Barber, Hirose, Sproul[8]	§ 103	11, 12
Barber, Hirose, Laird[9]	§ 103	11, 13
Barber, Hirose, Segal[10]	§ 103	11–13
Barber, Hirose, Belkind[11]	§ 103	1–3, 6–8
Barber, Hirose, Belkind, Aokura	§ 103	4, 5
Barber, Hirose, Belkind, Yamazaki	§ 103	9
Barber, Hirose, Belkind, Dogheche	§ 103	9, 10
Barber, Hirose, Belkind, Sproul	§ 103	11, 12
Barber, Hirose, Belkind, Laird	§ 103	11, 13
Barber, Hirose, Belkind, Segal	§ 103	11–13

In support of its unpatentability arguments, Petitioner relies on the declaration of Dr. Vivek Subramanian. Ex. 1002.

II. ANALYSIS

The Petition is substantively identical to the petition in the Applied IPR. *See* Mot. 1 (stating that the Petition and the petition in the Applied IPR are identical "in all substantive respects" and that they include "identical exhibits and rel[y] upon the same expert declarants"), 3 (stating that

[8] W. Sproul, *High-rate reactive DC magnetron sputtering of oxide and nitride superlattice coatings*, Elsevier Science Ltd. 51, 641 (1998) (Ex. 1036).
[9] US 2001/0041252 A1, published Nov. 15, 2001 (Ex. 1034).
[10] US 2001/0047838 A1, published Dec. 6, 2001 (Ex. 1069).
[11] A. Belkind et al., *Pulsed-DC Reactive Sputtering of Dielectrics: Pulsing Parameter Effects*, Society of Vacuum Coaters, 43rd Annual Technical Conference Proceedings, 86 (2000) (Ex. 1008).

IPR2021-01030 "is identical to the Applied IPR in all substantive respects," and "includes identical grounds, analysis, and exhibits and relies upon the same expert declarants and declarations"). For the same reasons provided in the Applied IPR Institution Decision (IPR2021-00103, Paper 13), which we incorporate expressly herein, we find that Petitioner demonstrates a reasonable likelihood of prevailing with respect to at least one of the challenged claims of the '276 patent.

III. GRANT OF MOTION FOR JOINDER

Joinder in *inter partes* review is governed by 35 U.S.C. § 315(c):

> (c) JOINDER.—If the Director institutes an inter partes review, the Director, in his or her discretion, may join as a party to that inter partes review any person who properly files a petition under section 311 that the Director, after receiving a preliminary response under section 313 or the expiration of the time for filing such a response, determines warrants the institution of an inter parties review under section 314.

"Any request for joinder must be filed, as a motion under § 42.22, no later than one month after the institution date of any inter partes review for which joinder is requested." 37 C.F.R. § 42.122(b). As the moving party, Petitioner bears the burden of proving that it is entitled to the requested relief. 37 C.F.R. § 42.20(c). In deciding whether to grant a motion for joinder, the Board has considered (1) Petitioner's explanation why joinder is appropriate, (2) whether any new grounds of unpatentability are asserted in the second petition, (3) what impact, if any, joinder would have on the cost and schedule for the existing proceeding, and (4) whether granting joinder will add to the complexity of briefing and/or discovery. *See* Consolidated Trial Practice Guide, 76 (Nov. 2019) (https://www.uspto.gov/

TrialPracticeGuideConsolidated) (citing *Kyocera Corp. v. Softview LLC*, IPR2013-00004, Paper 15 at 4 (PTAB Apr. 24, 2013)).

The Applied IPR was instituted on May 11, 2021. Applied IPR, Paper 13. Petitioner filed a Motion for Joinder in this proceeding on June 4, 2021. *See* Mot. Thus, Petitioner's Motion for Joinder is timely because joinder was requested no later than one month after the May 11, 2021, institution date of the Applied IPR. *See* 37 C.F.R. § 42.122(b).

Petitioner contends that joinder is appropriate here because it seeks to join the Applied IPR "solely as an 'understudy,' where Petitioner would only assume an active role in the event Applied Materials settles with Patent Owner . . . and moves to terminate the Applied IPR." Mot. 1. Petitioner also observes that this IPR "is substantively identical to the corresponding Applied IPR" and "Petitioner will agree to consolidated filings and discovery, and procedural concessions, which Applied Materials does not oppose." *Id*. at 2–3. According to Petitioner, this IPR "includes identical grounds, analysis, and exhibits and relies upon the same expert declarants and declarations" as the Applied IPR, and keeping the two separate "would entail needless duplication of effort." *Id*. at 3. Petitioner further argues that "the case is amenable to consolidated filings" and agrees "to incorporate its filings with those of Applied Materials in a consolidated filing." *Id.*

Petitioner represents that this Petition "raises no new grounds of unpatentability from those of the Applied IPR." *Id*. at 4.

Petitioner also argues that there is no impact on the trial schedule for the Applied IPR, which "would not need to be delayed to effect joinder." *Id.* at 4–5.

Petitioner contends that joinder "will simplify briefing and discovery" because Petitioner and Applied Materials "will engage in consolidated

filings and discovery, which will simplify the briefing and discovery process." *Id.* at 5.

We are persuaded by Petitioner's arguments, and by the fact that the motion is unopposed. Petitioner agrees to take an "understudy" role and not assume an active role in this proceeding, which favors joinder. Because the Petition challenges the same claims on the same grounds using the same prior art, we find this fact favors joinder. Indeed, the Board "routinely grants motions for joinder where the party seeking joinder introduces identical arguments and the same grounds raised in the existing proceeding." *Samsung Elecs. Co., Ltd. v. Raytheon Company*, IPR2016-00962, Paper 12 at 9 (PTAB Aug. 24, 2016). Moreover, because the issues to be decided are the same and Petitioner agrees to consolidating filings for all substantive papers in the Applied IPR, refraining from advancing separate arguments, using the same experts, and limiting its deposition time to the time already allotted, we find that these facts also favor joinder. *See* Mot. 3–5.

For the reasons stated above, we determine that granting Petitioner's Motion for Joinder is warranted.

IV. CONCLUSION

For the reasons set forth above, we determine that Petitioner has demonstrated a reasonable likelihood of prevailing with respect to at least one challenged claim of the '276 patent. Thus, we institute an *inter partes* review on all challenged claims and on all grounds presented.

We also find that Petitioner has made a sufficient showing in support of its unopposed Motion for Joinder. Accordingly, we *grant* Petitioner's Motion for Joinder and join Petitioner to IPR2021-00103.

V. ORDER

In consideration of the foregoing, it is hereby:

ORDERED that an *inter partes* review is instituted on each of the grounds asserted in the Petition;

FURTHER ORDERED that, pursuant to 35 U.S.C. § 314(c) and 37 C.F.R. § 42.4, notice is hereby given of the institution of a trial, which shall commence on the entry date of this decision;

FURTHER ORDERED that the Motion for Joinder with IPR2021-00103 is *granted*, and Petitioner is joined as a party to IPR2021-00103;

FURTHER ORDERED that that Petitioner's role in IPR2021-00103 shall be limited as stated by Petitioner in the Motion for Joinder unless and until Applied Materials ceases to participate in IPR2021-00103;

FURTHER ORDERED that, subsequent to joinder, the grounds for trial in IPR2021-00103 remains unchanged;

FURTHER ORDERED that, subsequent to joinder, the Scheduling Order in place for IPR2021-00103 remains unchanged;

FURTHER ORDERED that all further filings shall be made in IPR2021-00103;

FURTHER ORDERED that, in IPR2021-00103, Petitioner will file each paper, except for any paper that does not involve the other party, as a single, consolidated filing with Applied Materials, subject to the page limits set forth in 37 C.F.R. § 42.24, and shall identify such filing as a consolidated filing;

FURTHER ORDERED that, for any consolidated filing, if Petitioner wishes to file an additional paper to address points of disagreement with Applied Materials, Petitioner must request authorization from the Board to file a motion for an additional paper or pages;

FURTHER ORDERED that Petitioner shall collectively designate attorneys with Applied Materials to conduct the cross-examination of any witness produced by Patent Owner and the redirect of any witness produced by Applied Materials and Petitioner, within the timeframes set forth in 37 C.F.R. § 42.53(c) or agreed to by the parties;

FURTHER ORDERED that Petitioner shall collectively designate attorneys with Applied Materials to present at the oral hearing, if requested and scheduled, in a consolidated argument;

FURTHER ORDERED that the case caption in IPR2021-00103 shall be changed in accordance with the attached example; and

FURTHER ORDERED that a copy of this Decision shall be entered into the record of IPR2021-00103.

FOR PETITIONER:

David Cavanaugh
Richard Goldenberg
WILMER CUTLER PICKERING HALE AND DORR LLP
david.cavanaugh@wilmerhale.com
richard.goldenberg@wilmerhale.com

FOR PATENT OWNER:

H. Annita Zhong
Benjamin Hattenbach
C. Maclain Wells
IRELL & MANELLA LLP
hzhong@irell.com
DemarayIprs@irell.com
bhattenbach@irell.com
mwells@irell.com

Trials@uspto.gov
571-272-7822

Paper 8
Date: October 29, 2021

UNITED STATES PATENT AND TRADEMARK OFFICE

BEFORE THE PATENT TRIAL AND APPEAL BOARD

APPLIED MATERIALS, INC. and INTEL CORPORATION,[1]
Petitioner,

v.

DEMARAY LLC,
Patent Owner.

IPR2021-00103
Patent 7,544,276 B2

---

[1] Intel Corporation was joined as a petitioner in this proceeding based on a petition and motion for joinder filed in IPR2021-01030, both of which were granted.