PUBLIC REDACTED VERSION

Trials@uspto.gov
571-272-7822

Paper 61
Date: May 18, 2022

[redacted]

UNITED STATES PATENT AND TRADEMARK OFFICE

BEFORE THE PATENT TRIAL AND APPEAL BOARD

GODBERSEN-SMITH CONSTRUCTION COMPANY
d/b/a/ GOMACO CORPORATION,
Petitioner,

v.

GUNTERT & ZIMMERMAN CONST. DIV., INC.,
Patent Owner.

IPR2021-00136
Patent 9,908,571 B2

Before PATRICK R. SCANLON, HYUN J. JUNG, and
JAMES J. MAYBERRY, *Administrative Patent Judges.*

MAYBERRY, *Administrative Patent Judge*.

JUDGMENT
Final Written Decision
Determining All Challenged Claims Unpatentable
35 U.S.C. § 318(a)

I. INTRODUCTION

Petitioner, Godbersen-Smith Construction Company, d/b/a GOMACO Corporation, challenges claims 1–15 (the "Challenged Claims") of U.S. Patent No. 9,908,571 B2 (Ex. 1001, the "'571 patent"), which is assigned to

Patent Owner, Guntert & Zimmerman Const. Div., Inc. We have jurisdiction under 35 U.S.C. § 6, and we issue this Final Written Decision under 35 U.S.C. § 318(a) and 37 C.F.R. § 42.73. For the reasons below, we conclude that Petitioner has proven, by a preponderance of the evidence, the unpatentability of claims 1–15 of the '571 patent.

A. Procedural History

Petitioner filed a Petition ("Pet.") requesting *inter partes* review of the Challenged Claims. Paper 1. Patent Owner filed a Preliminary Response to the Petition. Paper 8.[1] With our authorization (Paper 10), Petitioner filed a Preliminary Reply (Paper 13) to the Patent Owner Preliminary Response, and Patent Owner filed a Preliminary Sur-reply (Paper 16) to the Preliminary Reply.[2] Upon review of the arguments and supporting evidence, we instituted an *inter partes* review of all claims and grounds asserted in the Petition. Paper 19 ("Decision on Institution" or "Dec. on Inst.").

Patent Owner filed a Patent Owner Response to the Petition. Paper 28[3] ("PO Resp."). Petitioner filed a Reply to the Patent Owner Response. Paper 42[4] ("Pet. Reply"). Patent Owner filed a Sur-reply to Petitioner's Reply. Paper 49[5] ("PO Sur-reply").

A consolidated oral hearing for this proceeding and IPR2021-00234 was held on February 18, 2022, and the transcript for that hearing is entered in the record. Paper 58[6] ("Tr."). We also enter into the record the transcript

[1] Paper 9 is the public version of the Patent Owner Preliminary Response.
[2] Papers 14 and 17 are public versions of the Preliminary Reply and Preliminary Sur-reply, respectively.
[3] Paper 27 is the public version of the Patent Owner Response.
[4] Paper 43 is a public version of the Petitioner's Reply.
[5] Paper 48 is a public version of the Patent Owner's Sur-reply.
[6] Paper 60 provides a redacted version of the Transcript.

for the consolidated hearing for related proceedings IPR2020-01698 and IPR2021-00050. Ex. 3001. During the consolidated hearing for this proceeding and IPR2021-00234, the parties often referenced arguments made in the hearing for IPR2020-01698 and IPR2021-00050. *See, e.g.*, Tr. 13:23–24 ("At the last hearing, we talked about . . . Rio."), 32:18–20 ("I'm going to try and avoid repeating a lot of arguments that I made at the hearing before.").

B. Real Parties in Interest

Petitioner identifies Godbersen-Smith Construction Company, "for which GOMACO Corporation is a registered active fictitious name," as the real party-in-interest. Pet. 110. Petitioner contends that "[n]o unnamed entity is funding, controlling, or otherwise has an opportunity to control or direct this Petition or Petitioner's participation in any resulting" *inter partes* review. *Id.*

Patent Owner identifies itself as the real party-in-interest. Paper 5, 1.

C. Related Matters

Petitioner and Patent Owner state that they are parties to ongoing litigation involving the '571 patent in the U.S. District Court for the Northern District of Iowa, in a case styled *Zimmerman Const. Div., Inc. v. GOMACO Corp.*, case no. 5:20-cv-4007-CJW-KEM. Pet. 110, Paper 5, 1; *see also* Ex. 1155 (staying the litigation pending this *inter partes* review).

Petitioner filed six other *inter partes* review proceedings, challenging patents related to the '571 patent, of which we instituted trial in three other proceedings. *See* IPR2020-01698, Paper 1 (challenging US 10,029,749 B2);

IPR2021-00050, Paper 1 (challenging US 9,708,020 B2); IPR2021-00234, Paper 1 (challenging US 10,196,101 B2)[7].

D. '571 Patent

The '571 patent, titled "Adjustable Bolster Swing Legs for Slipform Paving Machines," issued March 6, 2018, from an application filed on June 14, 2017, application No. 15/623,012 (the "'012 application"). Ex. 1001, codes (54), (45), (22). The '571 patent states that it is a continuation-in-part of application No. 15/148,811, filed on May 6, 2016, which is a continuation of application No. 13/897,125, filed on May 17, 2013, which is a continuation of application No. 13/069,096, filed on March 22, 2011. *Id.* at code (63), 1:7–13. The '571 patent also claims priority to a provisional application filed on March 26, 2010. *Id.* at code (60), 1:13–16.

1. Subject matter of the '571 patent

The '571 patent relates to "concrete slipform paving machines that have a propelling unit or tractor from which a paving kit is suspended with which a layer of concrete is shaped and finished over the underlying ground as the tractor travels along a road or airfield alignment." Ex. 1001, 1:20–24. The '571 patent explains that the tractor can have three or four crawler tracks, each mounted to a jacking column, supporting and propelling the frame during use of the paver in the paving direction. *Id.* at 1:53–56. The jacking columns are carried on the bolsters, or on bolster swing legs connected to the fore and aft ends of the side bolsters that are pivotable about vertical axes to change the relative position of the crawlers and

[7] We issued non-public versions of the Final Written Decisions in IPR2020-01698 and IPR2021-00050 on April 12, 2022. We issue a non-public version of the Final Written Decision in IPR2021-00234 concurrent with this Decision.

changing the movement correction of the crawlers and therewith the paving machine during use. *Id.* at 1:56–62.

Figure 1 of the ’571 patent, reproduced below, is a front elevation perspective view of a concrete slipform paving machine. Ex. 1001, 7:54–57.

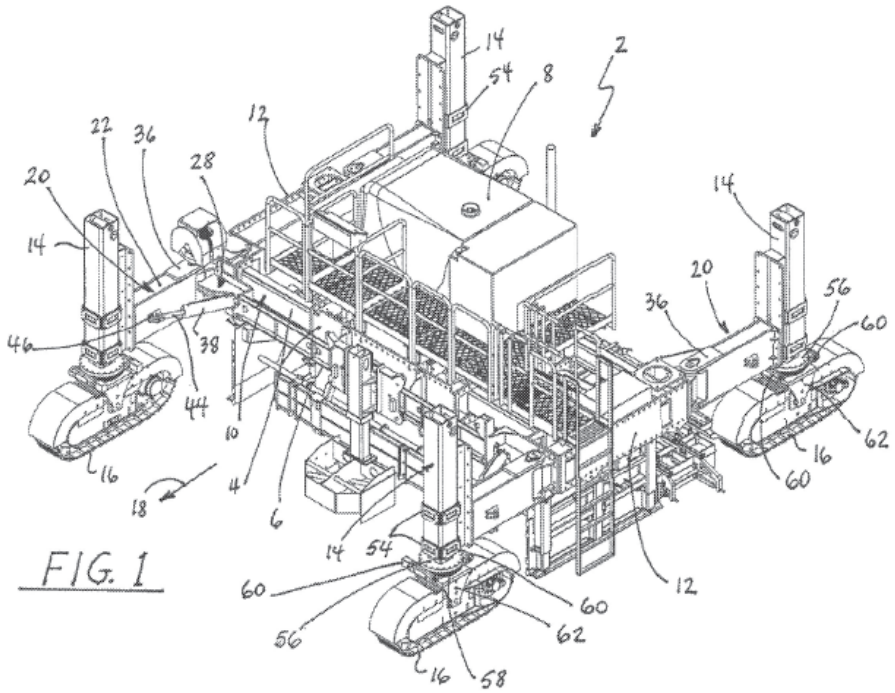

Figure 1 depicts paving machine 2 including main tractor frame 4 defined by center module 6, which carries diesel engine power unit 8. Ex. 1001, 8:45–50. Telescopic support beams 10 extend laterally outward from center module 6, and side bolsters 12 are secured to the outbound ends of support beams 10. *Id.* Mounted in the vicinity of the fore and aft ends of side bolsters 12 are hydraulically-powered jacking columns 14, with crawlers 16 secured to the lower ends thereof such that each crawler is rotatable about a vertical axis of the respective jacking column. *Id.* at 8:50–60. Jacking columns 14 and associated crawlers 16 are mounted to bolster swing legs 20. *Id.* at 9:23–25.

Figure 2 of the ’571 patent, reproduced below, provides a partial, simplified plan view of a portion of the paving machine.

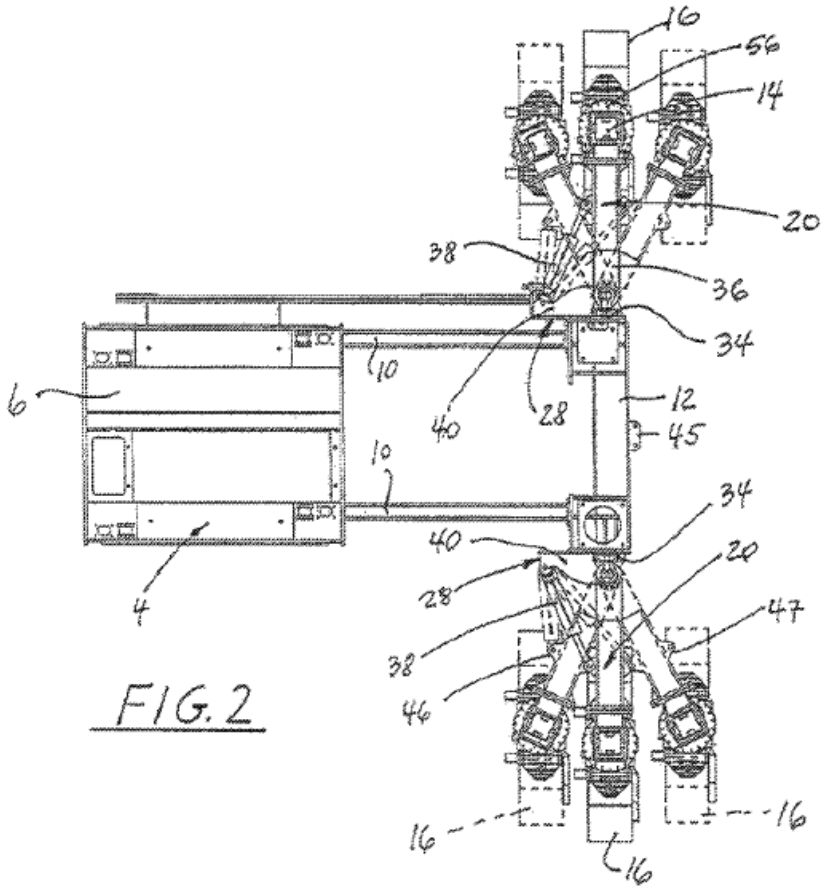

FIG. 2

Figure 2 depicts bolster swing legs 20, each having jacking column 14 and associated crawler 16 mounted at one end. Ex. 1001, 9:23–25. The opposite ends of bolster swing legs 20 are pivotally mounted to hinge bracket 28, which fastens to side bolsters 12. *Id.* at 9:25–34. Hydraulic actuators 38 are installed between hinges 28 and bolster swing legs 20 to pivot bolster swing legs 20 in a horizontal plane. *Id.* at 10:4–7.

Figure 4, reproduced below, provides a detailed front elevational view of jacking column 14 and crawler track 16 mounted at one end of bolster swing leg 20.

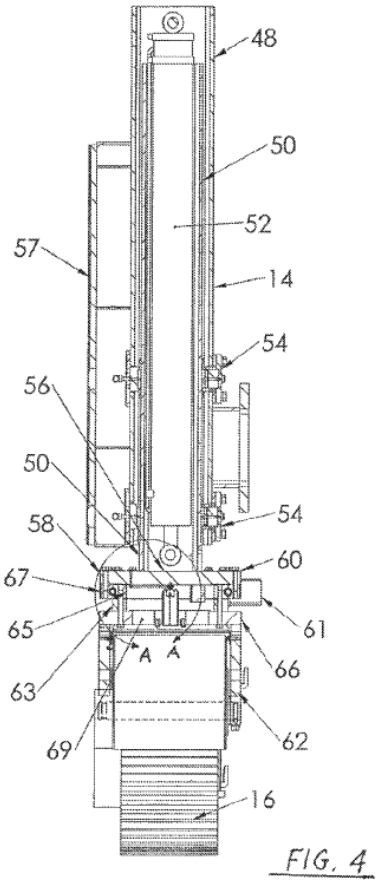

Figure 4 depicts jacking column 14, which includes inner tube 50 with mounting plate 56 at its lower end, and worm gear drive 60 is bolted to mounting plate 56. Ex. 1001, 11:35–37. Worm gear drive 60 provides power to rotate yoke 62 with crawler track 16 about the vertical axis of jacking column 14. *Id.* at 11:49–52.

Figure 9 of the ’571 patent, reproduced below, illustrates a paving machine embodiment having three legs.

FIG. 9

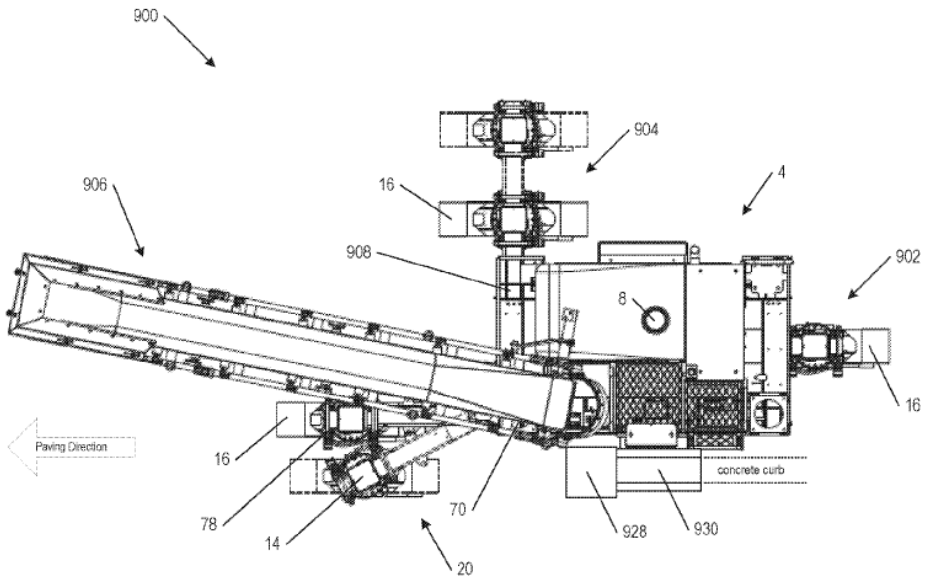

Figure 9 depicts three-leg paving machine 900 including forward swing leg 20 with jacking column 14, aft leg 902, and forward laterally telescoping leg 904, each leg extending from tractor frame 4 and having crawler tracks 16. Ex. 1001, 17:33–41.

Each swing leg assembly includes two angular position transducers 70, 78. Ex. 1001, 11:57–60, 12:20–22, Figs. 4A, 5. These transducers generate signals indicating any changes in the angular orientation of crawler yoke 62 relative to jacking column 14 or the swing leg relative to the side bolster. *Id.* at 12:1–6, 23–31. The ’571 patent describes using transducers 70, 78 in a feedback loop to automatically adjust the angular orientation of the crawler tracks without having to stop the machine or manually adjust the tracks or swing legs:

> Onboard computer or processor 82 and the associated transducers 70, 78 form a feedback loop in which the computer receives the angular position signal from swing leg transducer 78. When the angular position of the swing leg changes, the output signal from transducer 78 changes correspondingly. As a

> result of this orientational change of the swing leg, the angular orientation of the crawler tracks becomes angularly inclined relative to paving direction 18. Computer 82 calculates by how much the angle of the crawler track has to be changed relative to the jacking column (which has also been angularly offset relative to the transport direction by the swivel motion of the swing leg) to reset the crawler track suspended from yoke 62 to the angular orientation of the desired paving direction. The onboard computer then signals by how much worm gear drive 60 must rotationally adjust the orientation of yoke 62 and crawler tracks 16 to again align the crawler tracks with the paving direction. This process is repeated each time the angular position of the swing leg is changed, or when for other reasons the angular orientation of the crawler tracks becomes misaligned from the desired paving direction of the machine.

Id. at 12:38–59.

In summarizing the invention, the ’571 patent states that “the crawler track positions can be relocated when the machine is walked forward or backward while the crawler tracks at all times stay in their straight-ahead normal operating orientation and position without requiring any manual mechanical or electronic adjustments.” Ex. 1001, 6:45–49.

> The crawler tracks can also be relocated when the machine is stationary by supporting the weight of the machine off the ground, then hydraulically lifting each crawler track (one at a time) off the ground, and thereafter using the swing leg hydraulic cylinder and position transducer working in conjunction with the power drive or steering cylinder between the jacking column and the crawler track for moving the crawler track to another position.

Id. at 6:49–57.

2. Priority date of the Challenged Claims

The provisions of the Leahy-Smith America Invents Act (“AIA”) apply to a patent that contains a claim with an effective filing date on or after

March 16, 2013. *See* AIA, Pub. L. No. 112-29, 125 Stat. 284 (2011), §§ 3(n)(1), 6(f)(2)(A). The statute defines the "effective filing date" as

> (A) if subparagraph (B) does not apply, the actual filing date of the patent or the application for the patent containing a claim to the invention; or
> (B) the filing date of the earliest application for which the patent is entitled, as to such invention, to a right of priority under section 119, 365(a), 365(b), 386(a), or 386(b) or to the benefit of an earlier filing date under section 120, 121, 365(c), or 386(c).

35 U.S.C. § 100(i)(1).

Determining whether a patent is subject to the provisions of the AIA is straightforward when the patentee filed the application from which the patent issued before March 16, 2013, or when the patentee filed the application on or after March 16, 2013 without any priority claim. The determination is more complex, however, for a patent that issues from a "transition application," that is, an application filed on or after March 16, 2013, that claims the benefit of an earlier filing date. *See* MPEP § 2159.04 (9th ed. rev. 8.2017 Jan. 2018). Entitlement to the benefit of an earlier date under §§ 119, 120, 121, and 365 is premised on disclosure of the claimed invention "in the manner provided by § 112(a) (other than the requirement to disclose the best mode)" in the earlier application. *See* 35 U.S.C. §§ 119(e), 120.

The '012 application is a transition application. It was filed June 14, 2017, and ultimately claims priority to a provisional application filed March 26, 2010. Ex. 1001, codes (22), (60). The '012 application indicates that it is a continuation-in-part of its predecessor application in the claimed priority chain. *Id.* at code (63). Petitioner argues that the effective filing date of at least claim 8 of the '571 patent is June 14, 2017, the filing date of the '012

application. Pet. 102–103. Petitioner argues that no prior application in the claimed priority chain includes written description support for the recitations of "a laterally telescoping leg" and "a linear position transducer between the laterally telescoping leg and the forward bolster." *Id.* at 102. Petitioner explains that the "telescoping-leg features were part of the new matter added" in the continuation-in-part application. *Id.* at 102–103 (referencing Ex. 1001, 15:53–22:36, Figs. 9–13E).

We have reviewed Petitioner's arguments, and compared the disclosures of the '012 application and U.S. Patent No. 9,798,020 B2, which issued from the application to which the '012 application claims priority as a continuation-in-part, and conclude that at least claim 8 of the '571 patent has an effective filing date of June 14, 2017, the filing date of the '012 application. We find that the subject matter directed to laterally telescoping legs was added to the '012 application. Patent Owner does not dispute Petitioner's arguments. *See* PO Resp. 8–11 (discussing the '571 patent, but not discussing any priority issue), 44 (addressing Ground 4 and not disputing that Dahm[8] is prior art).

"Patent claims are awarded priority on a claim-by-claim basis based on the disclosure in the priority applications." *Lucent Techs., Inc. v. Gateway, Inc.*, 543 F.3d 710, 718 (Fed. Cir. 2008). Although Petitioner challenges more than claim 8 here, we need not determine the priority dates of any of the other Challenged Claims. All of the other challenges in the Petition are based on combinations where the asserted references are prior art even if the other Challenged Claims are entitled to the earliest possible

[8] US 2015/0354149 A1, published Dec. 10, 2015, filed June 9, 2014 (Ex. 1030, "Dahm").

effective filing date (March 26, 2010). *Compare* Pet. 6 (providing issue dates for Rio[9], Widdrington[10], and Smolders[11]), *id.* at 26 (providing publication date of CIII[12]) *with* Ex. 1001, code (60) (providing the filing date of provisional application No. 61/318,223). Accordingly, we assume, without deciding, that the Challenged Claims, other than claim 8, are entitled to their earliest possible effective filing date.

E. Illustrative Claims

Of the Challenged Claims, claim 1 is the sole independent claim, and we reproduce it below.

> 1. A paving machine configured to move in a paving direction for laying concrete into a molded form, having a generally upwardly exposed concrete surface and terminating in lateral concrete sides, the paving machine comprising:
>
> a center module having a forward end, an aft end, and lateral sides;
>
> a forward bolster connected to the forward end of the center module;
>
> an aft bolster connected to the aft end of the center module;
>
> a first crawler track and a second crawler track mechanically coupled to the forward bolster and a third crawler track mechanically coupled to the aft bolster;
>
> the forward bolster having a first swing leg, an upright first jacking column secured to the first swing leg, and a rotary connection between the first jacking column and the first crawler track permitting relative rotational movements of the first crawler track and the first jacking column about an upright axis; and

---

[9] US 7,523,995 B2, issued Apr. 28, 2009, filed July 14, 2005 (Ex. 1006, "Rio").

[10] US 3,252,349, issued May 24, 1966, filed Sept. 23, 1963 (Ex. 1008, "Widdrington").

[11] US 6,481,924 B1, issued Nov. 19, 2002 (Ex. 1010, "Smolders").

[12] *Commander III New Generation Trimmer/Paver Operator/Service Manual G21 Controls*, GOMACO (2002) (Ex. 1005, "CIII").

> a first power drive between the first jacking column and the first crawler track of the first swing leg, configured for translating relative rotational movements between the first jacking column and the first crawler track.

Ex. 1001, 22:38–60.

F. Prior Art and Asserted Grounds

Petitioner asserts that the Challenged Claims are unpatentable based on six grounds:

Claim(s) Challenged	35 U.S.C. §[13]	References/Basis
1–3, 5–7, 14, 15	103	CIII, Rio
4	103	CIII, Rio, Widdrington
9–13	103	CIII, Rio, Smolders
8	103	CIII, Rio, Dahm

The following subsections provide brief descriptions of the asserted prior art references.

1. CIII

CIII, titled "Commander III New Generation Trimmer/Paver Operator Service Manual, G21 Controls," is an operating manual for the Gomaco Commander III ("CIII paver"), one of Petitioner's paving machines. *See* Ex. 1005, 1-2[14]. CIII indicates that it is revision number 1.4 and includes a copyright date of 2002. *Id.* at 3.

We reproduce an annotated version of a drawing of the CIII paver, below.

[13] The relevant sections of the AIA took effect on March 16, 2013. Because we determine that at least one claim of the '571 patent is entitled to priority after March 16, 2013, our citations to 35 U.S.C. § 103 are to the AIA version of the statute.

[14] We refer to the pagination of the operating manual, rather than the pagination of the exhibit as provided by Petitioner.

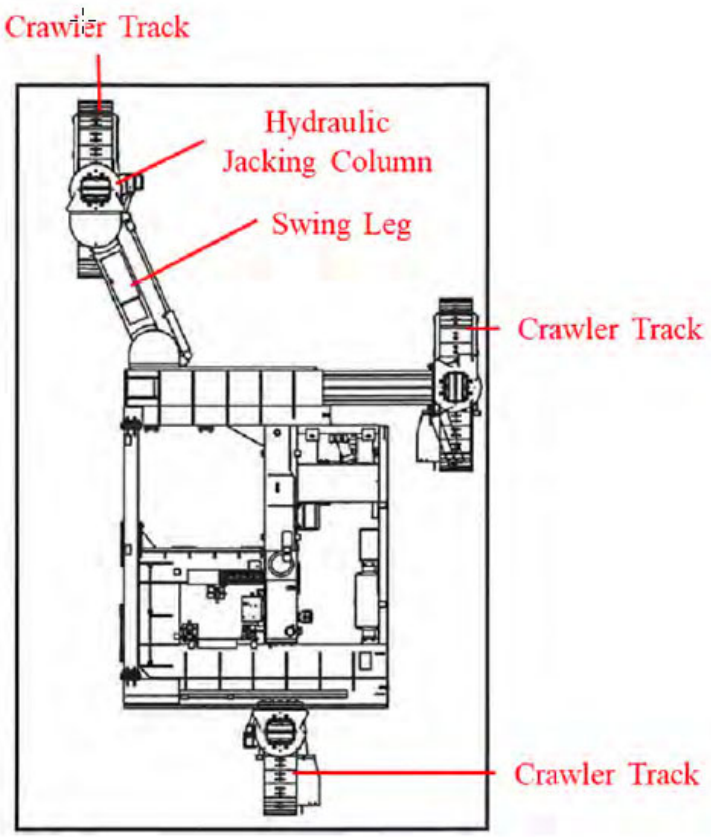

Pet. 13. This image depicts a plan view of a three-crawler version of the CIII paver, with annotations added by Petitioner that identify the crawler tracks, jacking column, and swing leg. We reproduce two additional images from CIII bearing Petitioner's annotations below.

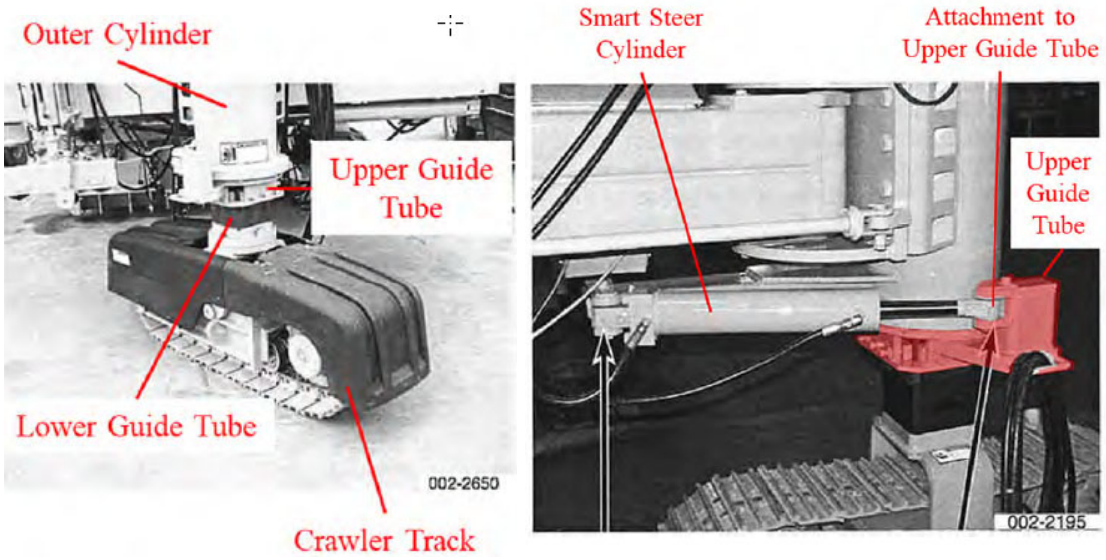

[redacted]

Id. at 15, 17. The image on the left depicts an annotated image of a crawler and lower portion of a jacking column of CIII, and the image on the right depicts a "smart steer cylinder" attached to the lower portion of the jacking column. *Id.* at 15–17. "[T]he steering cylinder, when actuated, rotates the guide tubes and crawler track in unison relative to the outer cylinder." *Id.* at 16 (referencing Ex. 1005, 8-105–107, 8-71–72, 5-35, 5-37).

CIII includes an electronic steering system that includes a sensor, feedback potentiometer, servo valve, and control loop. Ex. 1005, 8-105. "The feedback pot[entiometer] measures the position of the track and sends a continuous signal to the [controller], indicating the track position" and the controller compares the steer and feedback potentiometer signals and causes the track to rotate to the desired orientation. *Id.* at 8-106.

2. Rio

Rio, titled "Milling Machine," issued April 28, 2009. Ex. 1006, codes (54), (45). Rio is generally directed to machines that treat road surfaces, "and more particularly to a road planer or milling machine." *Id.* at 1:5–7. We reproduce Rio's Figure 2, as annotated in the Petition, below.

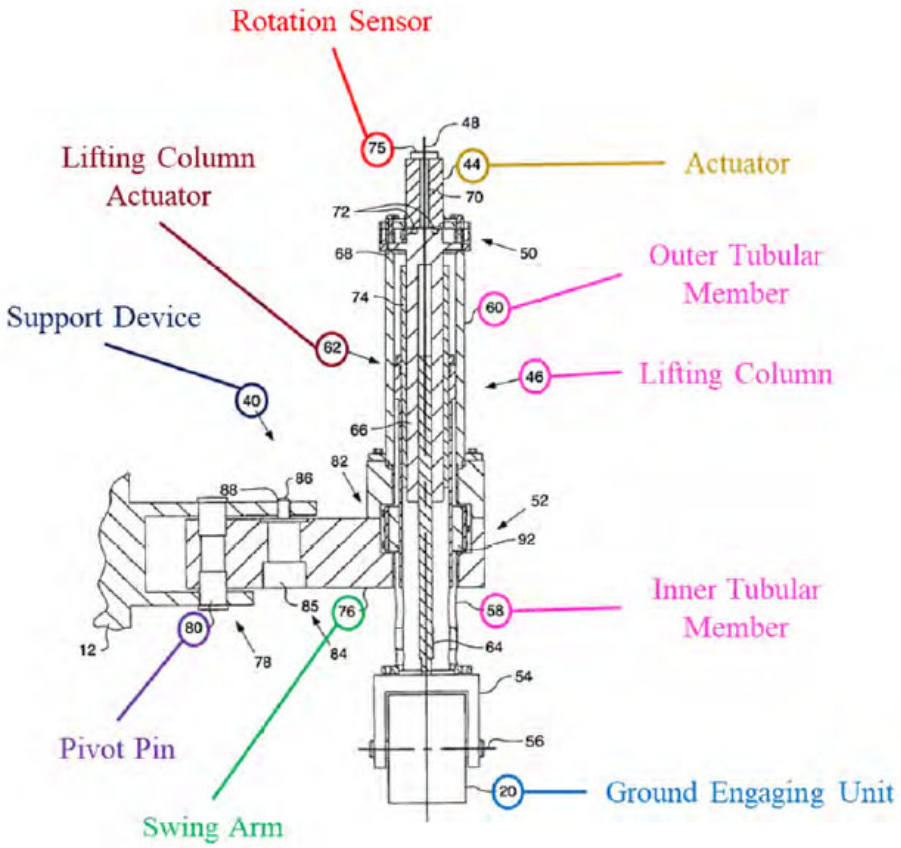

Pet. 25. Figure 2 depicts a longitudinal section of a portion of Rio's cold planer, showing a swing arm, lifting column, and ground engaging unit. Ex. 1006, 3:29–30, 3:62–64, 4:51–53, 6:12–15. Annotations identify ground engaging unit 20, support device 40, actuator 44, lifting column 46, inner tubular member 58, outer tubular member 60, lifting column actuator 62, rotation sensor 75, swing arm 76, and pivot pin 80.

Actuator 42 (not depicted above) connects to support device 40 and pivots swing arm 76 relative to frame 12. Ex. 1006, 4:40–44; *see id.*, Fig. 3 (depicting actuator 42). Actuator 44 rotates ground engaging unit 20 to maintain it in the proper orientation in response to swing arm 76 pivoting. *Id.* at 4:44–47. Controller 32 controls the movement of actuators 42, 44. *Id.* at 4:47–50. Support device 40 includes lifting column 46, which is associated with ground engaging unit 20. *Id.* at 4:51–53. Actuator 44 is

connected to lifting column 46 and causes at least a portion of the lifting column 46 to rotate about axis 48 to change the orientation of ground engaging unit 20. *Id.* at 4:56–59.

Preferably, at least one of actuators 42, 44 is a rotary actuator, such as "a double helix sliding spline design to produce high torque rotary motion in a compact device." Ex. 1006, 4:61–5:1. "[O]ther rotary actuators such as worm or sun gear designs . . . may also be employed with good result. Such use of a rotary actuator provides a compact apparatus to achieve rotary motion without the need for complicated and bulky linkages, and . . . provide[s] fine rotary steering control." *Id.* at 5:1–7. Rio discloses that "actuator 44 [may be] positioned on the lifting column 46 at a location spaced apart from . . . actuator 42 along . . . axis 48," and, "[p]referably, . . . is located at an upper portion 50 of the lifting column 46." *Id.* at 5:8–12.

Controller 32 receives ground engaging unit pivot position signal 122 and ground engaging unit rotational position signal 124. Ex. 1006, 6:65–7:13. Pivot sensor 83 generates signal 122 to indicate the instantaneous angular position of swing arm 76 relative to frame 12. *Id.* at 7:19–23. Rotation sensor 75 generates signal 124 to indicate the instantaneous rotation angle of the ground engaging unit 20. *Id.* at 7:23–27. Controller 32 sends control signals to actuators 42, 44. *Id.* at 7:28–30.

In operation, for example, controller 32 actuates actuator 42 to move swing arm 76. Ex. 1006, 8:18–32. "[P]ivot sensor 83 tracks this motion and sends responsive pivot position signals 122 to . . . controller 32," which "responsively actuates . . . actuator 44 to counter-rotate . . . ground engaging unit 20 to maintain it in the same running direction as [swing arm 76] moves toward the retracted position." *Id.* at 8:32–37.

3. Smolders

Smolders, titled "Slip-Form Paver," issued November 19, 2002. Ex. 1010, codes (54), (45). Smolders is generally directed "to a slip-form paver and a truck assembly for a construction machine." *Id.* at 1:3–4. We reproduce an annotated version of Smolders's Figure 1, from the Petition, below.

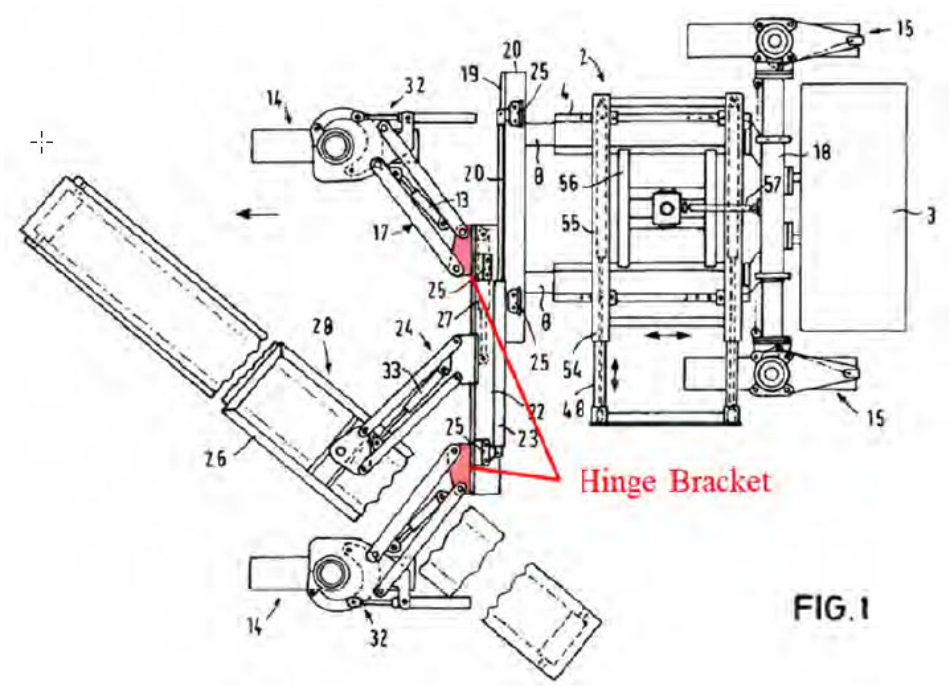

Pet. 77. Figure 1 depicts "a plan view of [Smolders's] slip-form paver," with annotations, in red, showing hinged brackets. Ex. 1010, 3:32. Relevant to this proceeding, Smolders's slip-form paver includes a hinged bracket on multiple swing legs. *Id.* at Fig. 1.

4. Widdrington

Widdrington, titled "Gear Drive Mechanism," issued May 24, 1966. Ex. 1008, 1. Widdrington discloses a worm gear mechanism. *Id.* at 1:9–12, 6:1–5. We reproduce an annotated version of Widdrington's Figure 10, from the Petition, below.

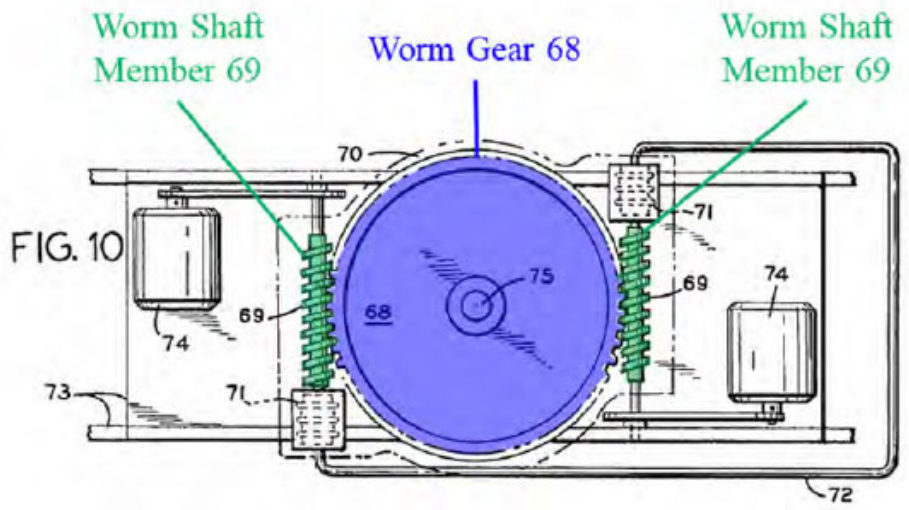

Pet. 106. Figure 10 depicts a schematic of an "externally toothed gear." Ex. 1008, 5:72–73. Annotations identify worm gear 68, in violet, and worm shaft members 69, in green. Relevant to this proceeding, Widdrington discloses that the depicted gear "is in the nature of a worm gear 68 engaged by a plurality of worm shaft members 69 equipped with a torque balancing hydraulic pressure system." *Id.* at 6:1–4.

5. Dahm

Dahm, titled "Frame Width Adjustment by Steering," published December 10, 2015, and "relates to methods and apparatus for operating self-propelled construction machines, and more particularly, but not by way of limitation, to methods and apparatus for operating slipform paving machines." Ex. 1030 ¶ 1, code (54).

Figure 2 of Dahm, as annotated in the Petition, is reproduced below.

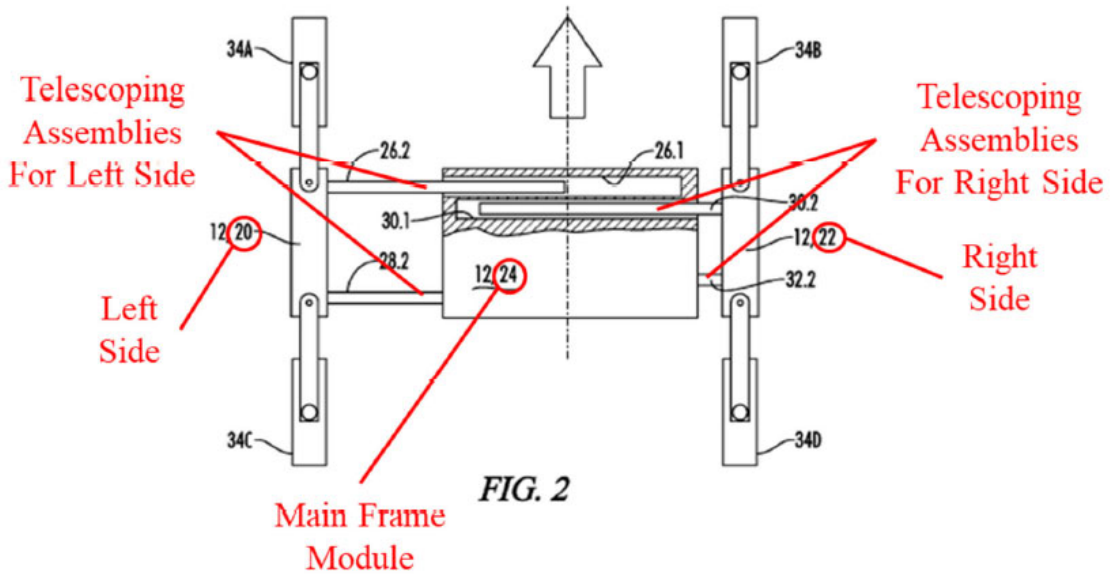

FIG. 2

Pet. 103. Figure 2 depicts machine frame 12 having main frame module 24. Ex. 1030 ¶ 52. Left side 20 and right side 22 of frame 12 are connected to main frame module 24 by respective telescopic assemblies 26, 28, 30, 32. *Id.* A plurality of ground engaging units 34A–B, which may be crawler tracks, connect to left side 20 and right side 22 of frame 12 via swing legs 36 (which are shown, but not numbered, above). *Id.* ¶ 56.

The telescoping assemblies include linear actuators 66 and 76, which include extension sensors that send signals to a controller. Ex. 1030 ¶¶ 71–73, 85. The extension sensor monitors the associated linear actuator's extension, allowing the controller to "determine a specific amount of desired movement of the telescoping frame assembly 26" and to "exactly control" extension. *Id.* ¶¶ 94, 33. Monitoring extension with extension sensors allows the telescoping parts to be clamped in place after a desired extension or retraction. *Id.* ¶ 136.

II. CIII AS A PRINTED PUBLICATION

"A petitioner in an inter partes review may request to cancel as unpatentable 1 or more claims of a patent . . . only on the basis of prior art consisting of patents or *printed publications*." 35 U.S.C. § 311(b) (2018) (emphasis added). As such, whether an asserted, non-patent reference qualifies as a printed publication is a threshold issue in evaluating a petitioner's grounds of unpatentability. A petitioner bears the burden of proving that a non-patent reference qualifies as a printed publication. *Acceleration Bay, LLC v. Activision Blizzard Inc.*, 908 F.3d 765, 772 (Fed. Cir. 2018) ("As petitioner, Blizzard had the burden to prove Lin is a printed publication."). Patent Owner argues that Petitioner has not met its burden as to CIII. PO Resp. 3.

A. Level of Ordinary Skill

Public accessibility of a reference centers on whether the reference is disseminated or otherwise made available to person having ordinary skill in the art. *See Jazz Pharm., Inc. v. Amneal Pharm.*, LLC, 895 F.3d 1347, 1355–56 (Fed. Cir. 2018). As such, we start by defining the level of ordinary skill.

1. Petitioner's contentions

Petitioner contends that a person having ordinary skill in the art "would have had at least a four-year degree in mechanical engineering or a closely related field and at least two years of experience designing, developing, or operating heavy machinery, including their components and control systems." Pet. 12–13 (referencing Ex. 1002 (Declaration of Dr. William Singhose) ¶ 22). Petitioner also contends that "[a]dditional education could substitute for professional experience and significant work experience—such as working with, servicing, or operating heavy machinery

in the field—could substitute for formal education." *Id.* at 13. Other than providing his understanding of the types of information considered in determining the level of ordinary skill, Dr. Singhose does not provide any additional support for this definition. *See* Ex. 1002 ¶¶ 21–22.

2. Patent Owner's Response

Patent Owner contends that the level of ordinary skill in the art is a person having "a Bachelor's degree in mechanical engineering, or a related field, and approximately two years of experience designing or developing heavy machinery, including their components and/or control systems." PO Resp. 11 (referencing Ex. 2030 (Declaration of Dr. Carl Nelson) ¶ 21). Like Dr. Singhose, Dr. Nelson provides his understanding of the types of information considered in determining the level of ordinary skill, but does not provide any additional support for this definition. *See* Ex. 2030 ¶¶ 19–21.

Patent Owner argues that Petitioner

> is incorrect to state that "working with, servicing or operating heavy machinery in the field" can "substitute for formal education" because as Dr. Singhose acknowledged on cross-examination, engineers and designers are required to understand failure modes and the internal workings of the heavy machinery, whereas operators "wouldn't have to know or [don't] generally know anything about that."

PO Resp. 5 (referencing Ex. 2039 (Transcript for Dr. Singhose's deposition (Vol. 1)), 36:12–25) (alteration in original). Patent Owner concludes that "those working with, servicing, or operating heavy machinery are not" persons having ordinary skill in the art. *Id.* (referencing Ex. 2030 ¶¶ 23–24).

3. Petitioner's Reply and Patent Owner's Sur-reply

Petitioner replies that its "level-of-skill includes not only those who develop and design heavy machinery, but also customers and dealers who

work with, service, or operate heavy machinery." Pet. Reply 1. Petitioner criticizes Patent Owner's definition, saying that, in the parallel district court litigation, Patent Owner's definition of the level of ordinary skill encompassed customers and dealers. *Id.* (referencing Ex. 1177, 2; Ex. 1176 ¶ 45). Petitioner argues that Patent Owner's witnesses testified that "people other than designers and developers routinely learn about the designs of machines by working on them and through training." *Id.* at 1–2 (referencing Ex. 1160, 31:5–34:10; Ex. 1161, 19:3–15, 20:5–23:2, 33:12–18, 48:11–20; Ex. 2039, 35:7–37:10). Petitioner adds that, in at least one other *inter partes* proceeding, the Board concluded that customers were persons having ordinary skill in the art. *Id.* at 2 (citing *HM Elecs., Inc. v. 3M Innovative Props. Co.*, IPR2015-00482, Paper 35 at 24 (PTAB Apr. 18, 2016)).

Patent Owner responds that it has provided a consistent definition of the level of ordinary skill in the art, and it is Petitioner who has changed its position as to the appropriate level of ordinary skill. PO Sur-reply 25.

4. Analysis and Conclusion – Level of Ordinary Skill

The level of skill in the art is "a prism or lens" through which we view the prior art and the claimed invention. *Okajima v. Bourdeau*, 261 F.3d 1350, 1355 (Fed. Cir. 2001). The person of ordinary skill in the art is a hypothetical person presumed to have known the relevant art at the time of the invention. *In re GPAC Inc.*, 57 F.3d 1573, 1579 (Fed. Cir. 1995). In determining the level of ordinary skill in the art, we may consider certain factors, including the "type of problems encountered in the art; prior art solutions to those problems; rapidity with which innovations are made; sophistication of the technology; and educational level of active workers in the field." *Id.* (internal quotation marks and citation omitted).

The parties' definitions of the level of ordinary skill differ slightly. Both definitions allow for experience to substitute for a formal education or an advanced degree to substitute for experience. Pet. 11–12; PO Resp. 11. Petitioner's definition also includes a broader experience base—designing, developing, or operating heavy machinery—as compared to Patent Owner's definition, which limits the experience to designing and developing heavy machinery. Pet. 11–12; PO Resp. 11.

We find, on the complete record, that a person having ordinary skill in the art would have had at least a four-year degree in mechanical engineering or a closely related field and at least two years of experience designing, developing, or operating heavy machinery, including their components and control systems, as Petitioner contends. Pet. 11; Ex. 1002 ¶ 22. The '571 patent Specification is written for a person who understands heavy machinery engineering and operations, as it describes the mechanical components and machine operations at a level of detail that indicates the intended reader understands heavy equipment. *See, e.g.*, Ex. 1001, 1:20–5:53 (describing the background of the invention and discussing mechanical components of paving machines in terms that indicate the reader is familiar with the components, including jargon associated with machines), 9:23–11:56 (describing components of jacking columns and swing legs), 11:57–12:64 (describing feedback loop for positioning crawler track). The prior art of record is also written to a level of detail indicating that it is directed to persons who understand heavy machinery engineering and operations. *See generally* Exs. 1005, 1006, 1007, 1008, 1009, 1010, 1011, 1030.

Also, we find that innovation in the field of endeavor of the '571 patent is not rapid, nor overly sophisticated, supporting a finding that

experience can substitute for a formal degree. *Compare* Ex. 1009 (providing a patent that issued in 1977 and disclosing a slip-form paver) *with* Ex. 1001 (providing a patent that claims priority to an application filed in 2010, and issued in 2018, and disclosing a slip-form paver).

We credit Dr. Singhose's testimony that, absent significant work experience, such as working with, servicing, or operating heavy machinery in the field, a person having ordinary skill in the art would have a four-year degree in mechanical engineering or a closely related field—testimony based on Dr. Singhose's education and experience. *See* Ex. 1002 ¶¶ 21–22; *see also id.* ¶¶ 8–17 (outlining Dr. Singhose's experience, including experience in teaching students with or seeking a four-year degree in mechanical engineering); Ex. 2030 ¶ 20 (providing that a person having ordinary skill in the art "would have had a four-year degree in mechanical engineering or a related field"). We do not find that Dr. Singhose's testimony that engineers need to understand failure modes and the internal workings of the heavy machinery, and operators do not have such an understanding, sufficiently undermines Petitioner's position that operators with significant experience working with heavy machinery may acquire the necessary knowledge base to substitute for a formal, four-year degree. *Cf.* Ex. 2030 ¶ 21 (Dr. Nelson testifying, with respect to the level of ordinary skill, that "[a]dditional education could substitute for professional experience *or vice versa*" (emphasis added)).

To the extent that Petitioner argues that dealers of heavy machinery would have acquired the requisite experience to be a person having ordinary

skill in the art merely by being dealers, we do not agree.[15] We find no persuasive evidence in the record to support a finding that a dealer would perform the types of activities, such as operating or servicing heavy machinery, to qualify as a person having ordinary skill. *See, e.g.*, Ex. 1164 (providing the only evidence from a heavy equipment dealer, and providing no testimony as to the types of experience gained as a dealer).

We do find that customers of heavy equipment, and specifically operators and individuals that maintain heavy equipment, could qualify as persons having ordinary skill in the art, provided they have the requisite education or experience. These individuals would gain experience in designing, developing, or operating heavy machinery, including their components and control systems. *See, e.g.*, Ex. 2039, 35:7–37:10 (Dr. Singhose testifying about similarities in designing and operating heavy machinery); Ex. 2031 ¶ 2 (Mr. Holley testifying that he worked for twenty-two years as a mechanical supervisor for a road construction company, and "was responsible for ensuring that the right paving equipment, with the right paving options, was purchased for road construction projects").

In summary, we find that a person having ordinary skill in the art would have had at least a four-year degree in mechanical engineering or a closely related field and at least two years of experience designing, developing, or operating heavy machinery, including their components and control systems. We also find that additional experience could substitute for a formal degree and an advanced degree could substitute for experience. We note that our findings and conclusions presented in this Final Written

[15] We note that the concept that a dealer of heavy equipment would be a person having ordinary skill in the art was introduced, for the first time, in Petitioner's Reply. *Compare* Pet. 11 *with* Pet. Reply 1.

Decision would not change under either party's definition of the level of ordinary skill.

B. Petitioner's Contentions – CIII as a Printed Publication

With the foundation of the level of ordinary skill in the art of the '571 patent, we now turn to Petitioner's contentions with respect to CIII as a printed publication. Petitioner contends that it "distributed over 100 copies of CIII to over 50 customers." Pet. 27. Petitioner supports this contention with the declaration testimony of its Technical Publications Manager, Shari Simmons. *Id.*; *see* Ex. 1012 (providing Ms. Simmons's testimony); *see also* Exs. 1100–1154 (providing confidential business records showing Petitioner's distribution of the CIII manual to customers).

Ms. Simmons testifies that, from 2004 until the time of her declaration, she has distributed to "dealers and customers operator's manuals and other information that can help them properly and safely operate the machines [Petitioner] sells." Ex. 1012 ¶ 3. Ms. Simmons testifies that the version of CIII provided as Exhibit 1005 "is the version of the operator's manual that [she] personally distributed in the 2005–2007 timeframe." *Id.* ¶ 7. Ms. Simmons testifies as to her standard practice of "send[ing] two operator's manuals to each dealer or customer." *Id.* ¶ 13; *see id.* ¶¶ 9–25 (providing Ms. Simmons's testimony on her recordkeeping process as reflected in Exs. 1100–1154).

Petitioner also contends that "no CIII described in the Simmons declaration or Appendix was subject to a non-disclosure agreement or secrecy obligation." Pet. 27; *see also* Ex. 1012 ¶ 26 ("To my knowledge, none of the [CIII] operator's manuals I shipped were subject to any non-disclosure agreements or other secrecy obligations."). Petitioner adds that CIII does not "bear any markings suggesting that dissemination was

prohibited or restricted. . . . Instead, CIII has a 2002 copyright date and encourages users to contact GOMACO for the latest version of the manual." Pet. 27–28 (referencing Ex. 1005, 3, 4).

Petitioner also cites to the Federal Circuit's decision in *GoPro, Inc. v. Contour IP Holding LLC*, 908 F.3d 690, 695 (Fed. Cir. 2018), for the proposition that distributing a document intended to reach the general public to dealers with no restrictions satisfies the requisite accessibility of the document. Pet. 27.

C. Patent Owner's Response – CIII as a Printed Publication

Patent Owner responds that the high price point for the machine accompanied by the CIII manual "effectively put *CIII* beyond of the reach of interested members of the public." PO Resp. 3 (referencing Ex. 2038, 2, which "list[s] a base price of $229,675 with optional equipment add-ons significantly increasing the price"). Patent Owner argues that "[t]his prohibitively expensive price tag renders CIII itself beyond the reach of all but the wealthiest individuals, excluding nearly all 'persons interested and ordinarily skilled in the subject matter or art, exercising reasonable diligence.'" *Id.* (quoting *Acceleration Bay*, 908 F.3d at 772). Patent Owner adds that Petitioner "has not attempted to demonstrate that . . . any such 'persons' would have found it reasonable to pay nearly $230,000 for access to *CIII*." *Id.*; *see id.* at 4 (identifying *AMS IP Holding B.V. v. Kokusai Elec. Corp.*, IPR2019-00369, Paper 8 at 16–18 (PTAB June 27, 2019) and *Halliburton Energy Servs., Inc. v. Dynamic 3D Geosolutions LLC*, IPR2014-01186, Paper 18 at 6 (PTAB Feb. 18, 2015) as Board decisions that found a high product price point weighed against finding the subject reference accessible).

Next, Patent Owner argues that those individuals that actually received CIII are not members of the interested public, as they are persons that operate heavy machinery such as the CIII machine, not persons who design or build such machines. PO Resp. 4–5.

Next, Patent Owner argues that CIII "was not made available to the public," meaning non-customers. PO Resp. 6. Patent Owner again directs us to the Board decision in *AMS IP Holding*, where the panel "determined that a product manual provided to customers along with the purchase of a corresponding product was ***not*** publicly accessible because, the petitioner failed to show that the product manual itself was available to an audience that includes 'at least the public interested in the art,' such as noncustomers." *Id.* (citing *AMS IP Holding B.V.*, IPR2019-00369, Paper 8 at 16–17). Patent Owner adds that Ms. Simmons testified that it was not Petitioner's practice to provide non-customers with CIII. *Id.*

Patent Owner distinguishes *GoPro*, because the reference at issue in that proceeding was made accessible to the general public, including "actual and potential dealers, retailers, and customers." PO Resp. 6 (quoting *GoPro, Inc.*, 908 F.3d at 695).

D. Petitioner's Reply and Patent Owner's Sur-reply

Petitioner replies that Patent Owner does not dispute that over 100 copies of CIII were distributed to customers and dealers as part of GOMACO's routine business operations. Pet. Reply 2; *see also id.* at 5–6 (discussing how dealers and customers received CIII). Petitioner repeats that CIII has a 2002 copyright date and does not include any confidentiality designation or restrictions on dissemination—facts that provide indicia of accessibility. *Id.* at 3 (citing Federal Circuit and Board decisions in support). Petitioner argues that the "Federal Circuit and Board routinely rule that

documents are publicly accessible when distributed with commercial products." *Id.*

Petitioner argues that "[t]he fundamental nature and purpose of *CIII*—an operator/service manual with detailed descriptions of machine features *that is meant for dissemination to customers*—further supports a public-accessibility finding." Pet. Reply 4 (citing *Nobel Biocare Servs. AG v. Instradent USA, Inc.*, 903 F.3d 1365, 1377 (Fed. Cir. 2018), and *Kyocera Wireless Corp. v. ITC*, 545 F.3d 1340, 1351 (Fed. Cir. 2008)).

Petitioner contends that "[d]ealers often keep product manuals and distribute them to noncustomers and potential customers who requested them." Pet. Reply 7. Petitioner explains that one such dealer, Mr. Andy Bazan, testified that it was his practice to retain copies of manuals, including CIII, and he would provide copies to any person, including non-customers, who requested one. *Id.* at 7–8 (referencing Ex. 1164 ¶ 6).

Patent Owner replies that Petitioner relies on dissemination of CIII to customers and dealers and these individuals are not persons having ordinary skill in the art. PO Sur-reply 24–25. With respect to Mr. Bazan's testimony, Patent Owner argues that no person having ordinary skill in the art would have had reason to know that Mr. Bazan was a source of CIII. *Id.* at 25–26.

E. Analysis and Conclusion – CIII as a Printed Publication

The determination of whether a reference is a "printed publication" "involves a case-by-case inquiry into the facts and circumstances surrounding the reference's disclosure to members of the public." *In re Klopfenstein*, 380 F.3d 1345, 1350 (Fed. Cir. 2004). Whether a document qualifies as a printed publication is a legal conclusion based on underlying factual determinations. *Medtronic, Inc. v. Barry*, 891 F.3d 1368, 1380 (Fed. Cir. 2018).

"Because there are many ways in which a reference may be disseminated to the interested public, 'public accessibility' has been called the touchstone in determining whether a reference constitutes a 'printed publication.'" *Jazz Pharm., Inc.* 895 F.3d at 1355 (quoting *In re Hall*, 781 F.2d 897, 898–99 (Fed. Cir. 1986)). A reference is considered publicly accessible if it was "disseminated or otherwise made available to the extent that persons interested and ordinarily skilled in the subject matter or art, exercising reasonable diligence, can locate it.'" *Id.* at 1355–56 (quoting *In re Wyer*, 655 F.2d 221, 226 (CCPA 1981)).

For the reasons below, we find that CIII qualifies as a printed publication. First, we find that the CIII reference itself provides indicia of accessibility. CIII includes a copyright date and includes contact information for GOMACO. Ex. 1005, 3. CIII is an "Operator and Service Manual," and, as such, is publicly disseminated to at least individuals that operate or service the Commander III Paver, similar to manuals supplied with a new automobile. *See, e.g.*, *id.* at 4 ("[The manual] contains detailed descriptions and instructions for the efficient operation and maintenance of your Commander III."). The manual itself has no confidentiality designation nor any restrictions on distributing the manual. Also, CIII does not indicate that it is a "draft," which, if it had such a designation, may suggest that GOMACO did not intend for its distribution. *Cf. Nobel Biocare*, 903 F.3d at 1377 (determining that the product catalog at issue in the case "is the type of document intended for public dissemination, and it bears no designations, such as 'draft' or 'confidential,' that might suggest that it was not intended for public distribution").

Second, we find that it is undisputed that CIII was actually disseminated to customers and dealers who purchased a Commander III

paver. We credit Ms. Simmons's testimony and accompanying exhibits demonstrating actual dissemination. *See* Ex. 1012. We credit this testimony, in part, based on the consistency between Ms. Simmons's declaration and deposition testimony. *See generally* Exs. 1012, 2041. Ms. Simmons's testimony is also supported, in part, by Mr. Bazan's testimony. *See* Ex. 1164 ¶ 5 ("With each Commander III machine, I received the Commander III Operator/Service Manual.").

Third, we find the nature of the type of equipment to which CIII pertains supports a finding of accessibility to the interested public. Paver machines, such as the Commander III Paver, are used in plain sight of the public. *See, e.g.*, Ex. 2001, 6 (depicting a paver slipforming a section of interstate highway); Ex. 2008, 8 (depicting a Commander IIIx operating along a roadway and in front of buildings). In this way, a person having a four-year degree in mechanical engineering and two years of experience designing and developing heavy machinery (that is, Patent Owner's more narrow definition of the level of ordinary skill) would be able to see the machines in operation. Such individuals, upon seeing these machines *and using reasonable diligence*, would be able to locate a manual for the machines, such as CIII. *See, e.g.*, Ex. 1161, 37:5–8 ("Q. When you buy a slipform paver, is it customary to get product manuals with those pavers? A. Product manuals, yes. In the way of a very rudimentary service manual and setup manual."). And, because CIII has no restrictions on its distribution, these individuals could access CIII. *Cf. GoPro, Inc.*, 908 F.3d at 695 (concluding that the GoPro Catalog had no restrictions on dissemination, such that interested members of the relevant public could access the catalog using reasonable diligence). That is, a member of the interested public, employing reasonable diligence, could locate a company that uses the

equipment and, because the manual does not have any restrictions on distribution, get a copy of the manual. *See* Ex. 1161, 37:5–8.

Similarly, these types of machines are sold through dealers. *See, e.g.*, Ex. 1164 ¶¶ 2, 6 (indicating that "Finkbiner is a dealer of heavy construction equipment, including . . . paving and milling machines," and that "[i]t was . . . my typical practice to keep a copy of manuals so that I can reference them in the event a customer or I have questions about the design, operation, or maintenance of a machine"); Ex. 1161, 15:14–16 (indicating that Mr. Greenwood's company bought some heavy machinery through dealers). We find that interested members of the relevant public, *exercising reasonable diligence*, would have been able to locate such dealers and inquire about obtaining a manual. The evidence of record demonstrates that one such dealer would provide a copy of CIII to "a current customer, potential customer, or anyone else for that matter [that] requested a copy of the Commander III Operator/Service Manual." Ex. 1164 ¶ 6.

Because we find that persons having ordinary skill in the art, even as that person is more narrowly defined by Patent Owner (that is, encompassing persons having experience in designing or developing heavy machinery, but not those merely with experience in operating or servicing such machines) would have been able to publicly access CIII, our conclusion of public accessibility would not change under either party's definition of the level of ordinary skill. That is, our conclusion of public accessibility of CIII does not depend on the actual dissemination of the manual to customers. We find, independent of this actual dissemination, a person having ordinary skill in the art, exercising reasonable diligence, could have accessed CIII prior to the earliest filing date of the '571 patent, by locating a dealer or user of the underlying machine, and requesting a copy. *See, e.g.*,

Ex. 1012 ¶¶ 3, 13; Ex. 1164 ¶ 6. The lack of any restrictions on disseminating the manual supports a finding that this approach would have been successful. *See, e.g.*, Ex. 1012 ¶¶ 3, 26; Ex. 1164 ¶ 6.

We have reviewed Patent Owner's arguments, but find that they do not identify a deficiency in Petitioner's position of public accessibility. As to the high cost of the Commander III paver, although this fact weighs somewhat against a finding of public accessibility, we find that the evidence we discuss above outweighs this cost evidence. Also, as we discuss above, we find that a person having ordinary skill in the art, *even a non-customer*, exercising reasonable diligence, could publicly access CIII, even if GOMACO did not directly provide CIII to non-customers. *See, e.g.*, Ex. 1012 ¶¶ 3, 26; Ex. 1164 ¶ 6. Significant to that finding is the lack of restrictions on disseminating the manual, and the visible nature of the underlying machine itself. Ex. 1012 ¶¶ 3, 26; Ex. 1164 ¶ 6.

Although we agree with Patent Owner that the record does not include evidence that a person having ordinary skill in the art would have known that he or she could obtain a copy of CIII from Mr. Bazan, significant in our weighing of the totality of evidence is that such a person, exercising reasonable diligence, could have identified Mr. Bazan as a dealer of the Commander III paver, and, as such, knowledge and accessibility of the manual would flow from that identification. Ex. 1164 ¶ 6.

Patent Owner's reliance on the non-precedential Board decision in *AMS IP Holding* is unavailing, as the facts in that case are distinguishable from the facts of the present proceeding. PO Resp. 4, 6. Significantly, the product manual at issue in *AMS IP Holding* included a statement requiring "express written permission" from the product provider to reproduce and transmit the manual, a fact that weighed against public accessibility. *AMS*

IP Holding B.V., IPR2019-00369, Paper 8 at 19. Here, CIII has no restrictions on disseminating the manual. The panel in *AMS IP Holding* also found that knowledge of the product in that case did not necessarily translate to knowledge of the manual. *Id.* at 20. Here, we find that the very nature of CIII supports a finding that a person having ordinary skill in the art, knowing of the underlying heavy machine, would know that such a machine would have an operator and service manual. *See, e.g.*, Ex. 1012 ¶ 13 (indicating that it was "standard practice" to send manuals with machines); Ex. 1005, 4 (stating that a customer should "read the instructions in [CIII] thoroughly" to keep the Commander III pave "running efficiently"); Ex. 1161, 37:5–38:1 (indicating that operating manuals came with heavy machinery).

In summary, we find, that interested members of the relevant public (including non-customers), exercising reasonable diligence, would have been able to publicly access CIII, given the absence of any dissemination restrictions, and the general nature of the document (an operator's and service manual) and the public nature of the underlying machine and its avenues of availability.

III. UNPATENTABILITY ANALYSIS

A. Applicable Law

In *inter partes* reviews, a petitioner bears the burden of proving unpatentability of the challenged claims, and the burden of persuasion never shifts to the patent owner. *Dynamic Drinkware, LLC v. Nat'l Graphics, Inc.*, 800 F.3d 1375, 1378 (Fed. Cir. 2015). To prevail in this proceeding, Petitioner must support its challenge by a preponderance of the evidence. 35 U.S.C. § 316(e); 37 C.F.R. § 42.1(d) (2021). Accordingly, all of our

findings and conclusions are based on a preponderance of the evidence standard.

Petitioner's asserted grounds of unpatentability are based on obviousness under 35 U.S.C. § 103.

> A patent for a claimed invention may not be obtained . . . if the differences between the claimed invention and the prior art are such that the claimed invention as a whole would have been obvious before the effective filing date of the claimed invention to a person having ordinary skill in the art to which the claimed invention pertains.

35 U.S.C. § 103 (2011). The question of obviousness is resolved on the basis of underlying factual determinations, including: (1) the scope and content of the prior art; (2) any differences between the claimed subject matter and the prior art; (3) the level of ordinary skill in the art[16]; and (4) when available, objective evidence, such as commercial success, long felt but unsolved needs, and failure of others. *Graham v. John Deere Co.*, 383 U.S. 1, 17–18 (1966).

"[O]bviousness must be determined in light of *all the facts*, and . . . a given course of action often has simultaneous advantages and disadvantages, and this does not necessarily obviate motivation to combine" teachings from multiple references. *Medichem, S.A. v. Rolabo, S.L.*, 437 F.3d 1157, 1165 (Fed. Cir. 2006) (emphasis added); *see also PAR Pharm., Inc. v. TWI Pharms., Inc.*, 773 F.3d 1186, 1196 (Fed. Cir. 2014) ("The presence or absence of a motivation to combine references in an obviousness determination is a pure question of fact.").

---

[16] We address the level of ordinary skill above, in Section II.A, in connection with our analysis of CIII as a printed publication.

Notwithstanding what the teachings of the prior art would have suggested to one with ordinary skill in the art at the time of the patent's invention, the totality of the evidence submitted, including objective evidence of nonobviousness, may lead to a conclusion that the challenged claims would not have been obvious to one with ordinary skill in the art. *In re Piasecki*, 745 F.2d 1468, 1471–72 (Fed. Cir. 1984). Objective evidence of nonobviousness, so called "secondary considerations," may include long-felt but unsolved need, failure of others, unexpected results, commercial success, copying, licensing, and praise. *See Graham*, 383 U.S. at 17–18; *Leapfrog Enters., Inc. v. Fisher–Price, Inc.*, 485 F.3d 1157, 1162 (Fed. Cir. 2007).

B. Claim Construction

In *inter partes* reviews, we interpret a claim "using the same claim construction standard that would be used to construe the claim in a civil action under 35 U.S.C. 282(b)." 37 C.F.R. § 42.100(b) (2021). Under this standard, we construe the claim "in accordance with the ordinary and customary meaning of such claim as understood by one of ordinary skill in the art and the prosecution history pertaining to the patent." *Id.*

Petitioner provides a construction of the term "mechanically coupled." Pet. 13–15. We determine that we need not expressly construe this term to resolve a dispute between the parties. *See Realtime Data, LLC v. Iancu*, 912 F.3d 1368, 1375 (Fed. Cir. 2019) ("The Board is required to construe 'only those terms that . . . are in controversy, and only to the extent necessary to resolve the controversy.'") (quoting *Vivid Techs., Inc. v. Am. Sci. & Eng'g, Inc.*, 200 F.3d 795, 803 (Fed. Cir. 1999)).

Patent Owner provides express constructions for two terms: "a first power drive between the first jacking column and the first crawler track of

the first swing leg," and "a rotary connection between the first jacking column and the first crawler track." PO Resp. 12–17. We address these two terms, and an additional claim construction—whether independent claim 1 of the '571 patent is limited to "on-the-fly steering"—below.

1. "a first power drive between the first jacking column and the first crawler track of the first swing leg"

In our Decision on Institution, we construed the term "a first power drive between the first jacking column and the first crawler track" to mean "a first power drive physically between the first jacking column and the first crawler track of the first swing leg." Dec. on Inst. 16–19. Patent Owner asserts the same construction in its Patent Owner Response. PO Resp. 12–16. Petitioner also adopts this construction. *See, e.g.*, Tr. 12:11–18 ("So for purposes of this proceeding, we've assumed that definition applies. I think there was some confusion about what we were pursuing for claim construction. We're assuming that the physically between construction applies that the Board adopted during claim construction. We've applied that for all the patents.").

On the complete trial record before us, we see no reason to modify our construction of the term "a power drive between the jacking column and the crawler track" from the construction provided in the Decision in Institution.[17]

[17] The Decision on Institution provides our complete analysis of the construction of the claim term "a first power drive physically between the first jacking column and the first crawler track of the first swing leg." Dec. on Inst. 16–19.

2. "a rotary connection between the first jacking column and the first crawler track"

Patent Owner contends that we should construe the term "a rotary connection between the first jacking column and the first crawler track" to mean "a component that can rotate which is physically located between the jacking column and the crawler track." PO Resp. 16–17. Specifically, Patent Owner argues that we should reject Petitioner's interpretation of this claim term, which encompasses the situation where "'the crawler track rotates in unison with some components of the jacking column but relative to other components that do not rotate because they are fixed (e.g. the outer cylinder),' because it rewrites the plain language of the claims." *Id.* at 17 (referencing Pet. 61–62 n.9).

Petitioner replies that its "proposed obvious combination results in a design where the power drive and rotary connection are physically between the jacking column and the crawler track, satisfying [Patent Owner's] constructions." Pet. Reply 10. We determine that we need not expressly construe this term to resolve the parties' disputes. *See Realtime Data, LLC*, 912 F.3d at 1375.

3. On-the-fly steering

In addressing patentability issues, including objective indicia of non-obviousness, the parties seem to dispute whether the Challenged Claims are limited to "on-the-fly steering," that is, the situation where a crawler track is rotated when the track is in contact with the ground. *See, e.g.*, Tr. 10:18–23 ("So one thing that's happened throughout these proceedings is G&Z has contended their claims cover a design or [are] confine[d] to a design where the steering and the pivoting happen while the track is on the ground, on-the-fly steering and pivoting, they call it. But the claims do not just cover

that."), 35:23 (Patent Owner's counsel arguing that "But at the very least, absolutely you can't do it on the fly."); *cf.* Ex. 3001, 42:8–9 (Patent Owner's counsel arguing, concerning a related patent, "[t]hat's what the patent gives you. 90-degree steering on the fly."), 52:10–53:10 (Patent Owner's counsel arguing that jacking up the crawler track off the ground to rotate it is not within the scope of claim 1 of the '749 patent), 60:22–61:17 (Petitioner's counsel arguing that patent claims of the '749 patent do not cover only on-the-fly steering, but also encompass an embodiment where a crawler track is lifted off the ground and rotated)[18]. For the reasons discussed below, we construe independent claim 1 to be sufficiently broad to encompass both an embodiment where the crawler track is rotated when the track is in contact with the ground and an embodiment where the crawler track is lifted off the ground and rotated.

As an initial point, we note that neither party offers an express construction of any terms in the Challenged Claims that would limit the claims to an embodiment where the crawler track is rotated when the crawler track is in contact with the ground. Petitioner does argue that on-the-fly steering is not a claimed feature. Pet. Reply 18 (referencing Ex. 1157, 54:15–59:3; Ex. 1001, 6:49–57, 10:64–11:1). Patent Owner replies that its reliance on on-the-fly steering is directed to secondary considerations. PO Sur-reply 11–13.

We start with the claim language at issue. *TQ Delta, LLC v. DISH Network LLC*, 929 F.3d 1350, 1357 (Fed. Cir. 2019). Independent claim 1 recites a paving machine with a first power drive between the first jacking

[18] Ex. 3001 provides the redacted consolidated oral hearing transcript for IPR2020-01698 and IPR2021-00050, which involve related patents, patents that include claims that recite similar subject matter as the '571 patent.

column and first crawler track of a first swing leg, where the first power drive is "configured for translating relative rotational movements between the first jacking column and the first crawler track." Ex. 1001, 22:57–60. That is, the power drive rotates the crawler track. The plain language of this claim would encompass a swing leg assembly that rotates a crawler track when the crawler track is in contact with the ground, but we discern nothing in the claim that limits the claim to such an embodiment. Nor do we discern anything in the dependent claims that informs a construction of independent claim 1 that would so limit the scope of the independent claims to on-the-fly steering. *See, e.g.*, *id.* at 22:61–23:25 (providing claims 2 and 3, which recites components of a feedback loop that rotates the crawler track in response to pivotal motions of the first swing leg); *cf.* Ex. 1157, 57:8–20 (Dr. Nelson testifying that, "I finished the claims of the '749 patent, and likewise did not see anything that specifically says that the crawler track has to be on or off the ground, except that there is implicit functionality described in these claims that has to do with the steering," and testifying that "[n]othing particularly new in the '571 patent claims related to this question of on the ground versus off the ground.").

At oral hearing for IPR2020-01698 and IPR2021-00050, Patent Owner's counsel directed us to the claim limitations reciting the angular position transducers, crawler track, power drive, and processor as the limitations that limit the scope of the claims to on-the-fly steering, such as those limitations recited in claims 2 and 3 of the '571 patent. *See* Ex. 3001, 48:13–49:9. We discern nothing in the language of these claims, however, that would prevent these components from properly orienting the crawler track when the crawler track is lifted off the ground by a jacking column.

We turn now to the Specification, which "is the single best guide to the meaning of a disputed term." *Phillips v. AWH Corp.*, 415 F.3d 1303, 1315 (Fed. Cir. 2005) (en banc). The Specification supports a conclusion that the claims encompass an embodiment where the crawler track is rotated when the track is in contact with the ground, and an embodiment where the crawler track is lifted off the ground and rotated. For example, in the Brief Summary of the Invention, the Specification states that the configuration of angular transducers, processor, and power drive can position the crawler track "when the machine is walked forward or backward" (on-the-fly steering) or "when the machine is stationary . . . [by] lifting each crawler track (one at a time) off the ground, and thereafter using the . . . position transducer working in conjunction with the power drive . . . for moving the crawler track to another position." Ex. 1001, 6:45–57.

The Specification also discloses that the feedback loop arrangement, which includes the angular transducers, processor, and power drive, "automatically adjusts the angular orientation of the crawler tracks so that the tracks remain oriented in the travel direction without any need to stop operation of the machine *or* manually adjust the orientation of the tracks and/or the swing legs." Ex. 1001, 12:60–64 (emphasis added). That is, the feedback loop allows for changing the angular orientation of a crawler track without stopping operations (on-the-fly steering) *or* allows for adjusting the crawler track without the type of manual efforts previously required to reorient a crawler track when the track is off the ground. *Cf. id.* at 1:20–5:53 (discussing the Background of the Invention, including the manual efforts required to reorient a crawler track when the crawler track was lifted off the ground using the jacking column); PO Sur-reply 1 ("Before [Patent Owner]'s invention . . . , it took an entire work-shift and many man hours to

reposition the swing legs and crawler tracks on the prevailing slipform paver design. [The] invention made this costly downtime negligible *and* introduced *other* new benefits, like on-the-fly 90-degree steering." (emphasis added)).

In summary, we construe independent claim 1 to encompass both an embodiment where the crawler track is rotated when the track is in contact with the ground and an embodiment where the crawler track is lifted off the ground and rotated.

4. Additional terms

We determine that we need not expressly construe any other claim terms to resolve the parties' disputes on the current record. *See Realtime Data, LLC*, 912 F.3d at 1375.

C. Ground 1: Claims 1–3, 5–7, 14, and 15 as unpatentable over CIII and Rio

Petitioner contends that claims 1–3, 5–7, 14, and 15 are unpatentable over CIII and Rio. Pet. 7.

1. *Independent claim 1*

We turn our analysis to the scope and content of the prior art and any differences between the prior art and the subject matter of independent claim 1, on a limitation-by-limitation basis.

a) Undisputed limitations of claim 1

The following limitations of claim 1 are not disputed in this proceeding. We do, however, evaluate Petitioner's contentions to ensure they demonstrate, by a preponderance of the evidence, that the references disclose the subject matter.

(1) Preamble

The preamble of claim 1 recites "[a] paving machine configured to move in a paving direction for laying concrete into a molded form, having a generally upwardly exposed concrete surface and terminating in lateral concrete sides." Ex. 1001, 22:38–41. Petitioner contends that CIII discloses a slipform paver configured to operate as recited in the preamble. Pet. 42–44 (referencing Ex. 1005, 1-2, 3-11, 3-47, 3-51, 3-53, 4-2, 4-24, 4-25; Ex. 1002 ¶ 71).

Upon review of the information in the Petition and corresponding evidence, we determine Petitioner has demonstrated, by a preponderance of the evidence, on the complete record, that CIII discloses the subject matter of the preamble of claim 1. *See* Ex. 1005, 1-2, 3-11, 3-47, 3-51, 3-53, 4-2, 4-24, 4-25; Ex. 1002 ¶ 71. In view of this determination, we need not determine whether the preamble is limiting.

(2) "Center module" limitation

Claim 1 also recites "a center module having a forward end, an aft end, and lateral sides." Ex. 1001, 22:42–43 (the "center module" limitation of claim 1). Petitioner contends that "CIII's frame includes a center module having forward and aft ends and two lateral sides." Pet. 45 (referencing Ex. 1005, 1-13, 2-32, 3-14; Ex. 1002 ¶ 72); *see id.* (providing an annotated schematic from CIII (page 1-13), identifying the center module, forward and aft ends, and lateral sides).

Upon review of the information in the Petition and corresponding evidence, we determine Petitioner has demonstrated, by a preponderance of the evidence, on the complete record, that CIII discloses the subject matter of the "center module" limitation of claim 1. *See* Ex. 1005, 1-13, 2-32, 3-14; Ex. 1002 ¶ 72.

(3) "Bolster" limitations

Claim 1 also recites "a forward bolster connected to the forward end of the center module," and "an aft bolster connected to the aft end of the center module." Ex. 1001, 22:44–47 (the "bolster" limitations of claim 1). Petitioner contends that CIII discloses this subject matter. Pet. 46 (referencing Ex. 1005, 1-13, 2-32, 3-14; Ex. 1002 ¶ 73); *see id.* at 47 (providing an annotated version of the schematic drawing from CIII (page 3-14), with annotations identifying the forward bolster, forward end, aft bolster, aft end, and the center module), 48 (providing an annotated version of the schematic drawing from CIII (page 1-13), with annotations identifying the forward bolster, aft bolster, slidable leg, swing leg, and telescoping leg, and annotated images from CIII (page 6-2), identifying the forward bolster, hinge bracket, swing leg, and telescoping leg), 49 (providing an annotated image from CIII (page 3-23), identifying the swing leg, forward bolster, hinge bracket, and forward end of center module), 50 (providing an annotated image from CIII (page 2-32), identifying the slidable leg, aft bolster, and aft end of center module); *see also id.* at 50–52 (contending that Petitioner's use of the term bolster, which only appears in the claims, is consistent with Patent Owner's depictions in the '571 patent and Patent Owner's position in the parallel district court litigation).

Upon review of the information in the Petition and corresponding evidence, we determine Petitioner has demonstrated, by a preponderance of the evidence, on the complete record, that CIII discloses the subject matter of the "bolster" limitations of claim 1. *See* Ex. 1005, 1-13, 2-32, 3-14, 3-23, 6-2; Ex. 1002 ¶¶ 73, 74.

(4) "Crawler track" limitation

Claim 1 also recites "a first crawler track and a second crawler track mechanically coupled to the forward bolster and a third crawler track mechanically coupled to the aft bolster." Ex. 1001, 22:48–50 (the "crawler track" limitation of claim 1). Petitioner contends that "CIII discloses two crawler tracks mechanically coupled to a forward bolster and one crawler track mechanically coupled to an aft bolster." Pet. 53 (referencing Pet. 15–26 (summarizing CIII); Ex. 1002 ¶ 77); *see id.* at 53–54 (providing annotated schematic from CIII (page 6-3), identifying first, second, and third crawler tracks, along with the mechanical couples between the crawler tracks and forward and aft bolsters). Petitioner explains that "[t]he first crawler track attaches to a swing leg that couples to a front surface of the forward bolster with a hinge bracket," "[t]he second crawler track attaches to a telescoping leg that extends and retracts from the forward bolster," and "[t]he third crawler track attaches to a slidable leg that couples to the aft bolster." *Id.* at 54 (referencing Ex. 1005, 3-14–18, 6-3, 6-6, 6-7).

Upon review of the information in the Petition and corresponding evidence, we determine Petitioner has demonstrated, by a preponderance of the evidence, on the complete record, that CIII discloses the subject matter of the crawler track limitation. *See* Ex. 1005, 3-14–18, 6-3, 6-6, 6-7; Ex. 1002 ¶ 77.

(5) "Jacking column" limitation

Claim 1 also recites

> the forward bolster having a first swing leg, an upright first jacking column secured to the first swing leg, and a rotary

> connection[19] between the first jacking column and the first crawler track permitting relative rotational movements of the first crawler track and the first jacking column about an upright axis.

Ex. 1001, 22:51–56 (the "jacking column" limitation of claim 1). Petitioner contends that CIII discloses a swing leg mounted using a hinge bracket to the front surface of the forward bolster. Pet. 54 (referencing Ex. 1005, 3-17–18; Ex. 1002 ¶ 78; Pet. 15–26 (summarizing CIII)); *see also id.* at 55, 56 (providing annotated schematic from CIII (page 3-14), and annotated photograph from CIII (page 3-23), identifying swing leg, forward bolster, and hinge bracket).

Petitioner also contends that "CIII discloses an upright jacking column secured to a swing leg." Pet. 56 (referencing Ex. 1002 ¶ 79); *see also id.* at 57 (providing annotated photograph from CIII (page 3-17), identifying swing leg and jacking column).

Upon review of the information in the Petition and corresponding evidence, we determine Petitioner has demonstrated, by a preponderance of the evidence, on the complete record, that CIII discloses the undisputed subject matter of the "jacking column" limitation. *See* Ex. 1005, 3-14, 3-17–18, 3-23; Ex. 1002 ¶ 79). We discuss the subject matter requiring a rotary connection below, in our analysis of the power drive limitation of claim 1.

b) Disputed limitation of claim 1 – the "power drive" limitation

Claim 1 recites "a first power drive between the first jacking column and the first crawler track of the first swing leg, configured for translating

[19] Patent Owner does dispute the "rotary connection" requirement of the jacking column limitation of claim 1. We address these arguments in connection with our analysis of the power drive limitation of claim 1 below.

relative rotational movements between the first jacking column and the first crawler track." Ex. 1001, 22:57–60 (the "power drive" limitation of claim 1). In connection with the underlying dispute between the parties concerning the power drive limitation, Patent Owner also disputes whether the proposed combination discloses the rotary connection subject matter of the jacking column limitation of claim 1. We address the parties' disputes below, first providing the parties' positions as to the subject matter of the power drive limitation, then their positions with respect to motivation to combine. We conclude with our findings and conclusions of law.

(1) Subject matter of the "power drive" limitation

We first recount the parties' positions with respect to whether the subject matter of the power drive limitation of claim 1 is disclosed in the prior art. We note, however, that the subject matter of the limitation is intertwined with the parties' positions on motivation for Petitioner's proposed modification, as the motivation includes a motivation to position the power drive between jacking column and lifting column. As such, our delineation of the two sets of arguments is not a bright line.

(a) Petitioner's contentions

Petitioner identifies Rio's rotary actuator 44 as a power drive "that rotates the crawler track and portions of lifting column 46 about a vertical lifting column axis 48 (a 'first upright axis')." Pet. 59 (referencing Ex. 1006, 4:56–5:7, 5:32–34). We reproduce Petitioner's annotated version of Rio's Figure 2, below.

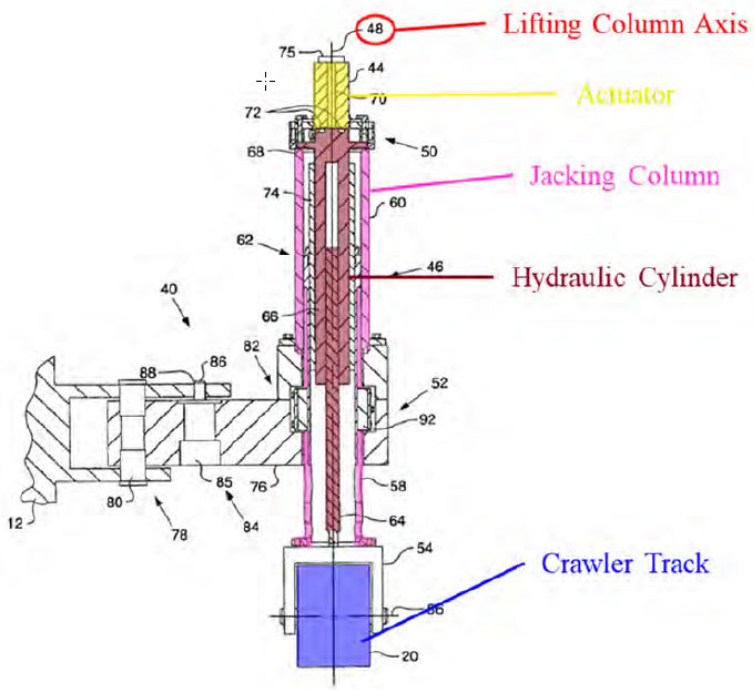

Pet. 60. Figure 2 depicts a longitudinal section of a portion of Rio's cold planer, showing a swing arm, lifting, or jacking, column, and ground engaging unit. Ex. 1006, 3:29–30, 3:62–64, 4:51–53, 6:12–15. Petitioner's annotations identify the crawler track (ground engaging unit, in purple), hydraulic cylinder (in maroon), jacking column (in pink), actuator (in yellow), and lifting column axis (in red).

Petitioner recognizes that Rio discloses, in Figure 2, that rotary actuator 44 is located at the top of Rio's lifting (jacking) column. *See* Pet. 62. Petitioner contends that "it would have been obvious to modify CIII's leg assembly by positioning Rio's rotary actuator 44 at the bottom of the jacking column and on top of the crawler track . . . , and using that power drive in combination with Rio's pivot sensor and coordinated control system." *Id.* Petitioner explains that, "[u]nder this design, . . . the entire jacking column would be fixed rotationally, and the rotary drive would be coupled between the bottom of the lower guide tube and the top of the

crawler track and would rotate the crawler track relative to the jacking column." *Id.* (referencing Ex. 1002 ¶ 86). That is, the proposed modification would satisfy the "rotary connection" subject matter of the jacking column limitation of claim 1. *Id.*

Petitioner contends that Rio itself suggests this modification. Pet. 62. Petitioner adds that locating a rotary actuator at the bottom of a lifting column to rotate a crawler track was known in the art. *Id.* at 62–63 (referencing Ex. 1006, 5:8–11; Ex. 1007[20], 5:14–59, Figs. 4–5; Ex. 1009[21], 7:35–58, Fig. 7; Ex. 1027[22], 3–4; Ex. 1002 ¶ 87). Petitioner also directs us to its discussion of reasons to combine the teachings of CIII with Rio, which we address separately, below, including reasons for locating Rio's actuator at the bottom of the lifting column. *See* Pet. 63 (cross-referencing Petition, Section VII.A.3).

(b) Patent Owner's counter arguments

Patent Owner argues that "*Rio* does not teach or suggest locating a power drive physically between a jacking column and crawler track." PO Resp. 21–22. Patent Owner argues that "*Rio* discloses positioning the rotary actuator near the top of the lifting column (and above the cylinder) so that sufficient torque is transmitted down through the lifting column to rotate the crawler track."[23] *Id.* at 25–26 (referencing Ex. 2030 ¶ 52).

---

[20] US 4,558,758, issued December 17, 1985 (Ex. 1007, "Littman").
[21] US 4,029,165, issued June 14, 1977 (Ex. 1009, "Miller").
[22] GT-3200 Trimmer/Slipform Paver (copyright 1997) (Ex. 1027, "GT-3200").
[23] At oral hearing, Patent Owner's counsel clarified that it was not its position that, by positioning the actuator near the top of the lifting column, as opposed to at the bottom, location provided a mechanical advantage merely by the additional distance between the actuator and crawler track. *See* Tr. 68:1–69:16.

Patent Owner also argues that Rio fails to explain how an actuator located anywhere along the lifting column other than at the top would operate to turn the crawler track. PO Resp. 26. Patent Owner concludes that

> *Rio's* preference for locating the rotary actuator at or near the top of the jacking column and the lack of any enabling disclosure of how the rotary actuator would be utilized elsewhere along the jacking column (to say nothing of locating it between the jacking column and crawler track, as claimed) indicates that a [person having ordinary skill in the art] would not have been led to the claimed invention given the teachings in the art.

Id. (citing *In re Bell*, 991 F.2d 781, 785 (Fed. Cir. 1993)).

Patent Owner also argues that "*Rio* did not contemplate placing its rotary actuator between the lifting column and crawler track in view of its failure to disclose a rotary connection between those two elements, as claimed." PO Resp. 26. Patent Owner argues that Petitioner's modification would require "redesigning the only structure *Rio* discloses that is capable of manipulating the crawler tracks, neither of which does *Rio* teach." *Id.* at 27 (referencing Ex. 2030 ¶ 54). Patent Owner argues that Petitioner "fails to provide sufficient explanation as to why *Rio*'s disclosure that a rotary actuator is '***positioned on***' the lifting column, and preferably at the top, suggests . . . that its rotary actuator could or should be placed physically between the jacking column and the crawler track of the *CIII* machine." *Id.* (emphasis in original). Patent Owner concludes that this failure indicates that Petitioner's modification is the product of hindsight. *Id.* at 27–28.

(c) Petitioner's Reply and Patent Owner's Sur-reply arguments

Petitioner replies that Patent Owner improperly limits Rio to a single embodiment. Pet. Reply 11. Petitioner argues that Rio expressly discloses an alternative preferred embodiment, where "actuator 44 is positioned on the

lifting column 46 at a location spaced apart from the first actuator 42 ***along the lifting column axis 48***." *Id.* (referencing Ex. 1006, 5:8–11) (emphasis in original). Petitioner explains that the teaching of positioning actuator 44 on the lifting column along axis 48 includes a position at the bottom of the lifting column. *Id.*

Petitioner argues that Patent Owner misrepresents Petitioner's obviousness position by "contending it requires 'entirely redesigning' *Rio's embodiments*." Pet. Reply 14 (citing PO Resp. 31). Petitioner argues that "*Rio* is a *secondary reference* in [the proposed] combination used to modify *CIII*—no overhaul of *Rio*'s design is necessary." *Id.*

In its Sur-reply, Patent Owner repeats its position that "*Rio's* only fully developed embodiment, the rotary actuator is located on top of the upper portion of *Rio's* lifting column." PO Sur-reply 3. Patent Owner reiterates that "*Rio* does not guide a [person having ordinary skill in the art] to locate the rotary actuator between the lifting column and crawler track at all," and that the teaching on which Petitioner relies is vague. *Id.* at 5–6. Patent Owner argues that Rio's disclosure would guide a person having ordinary skill in the art to position the rotary actuator at the upper portion of the lifting column. *Id.* at 6.

Patent Owner argues that Rio's vague teaching of positioning the actuator along the axis of the lifting column is insufficient to motivate a person having ordinary skill in the art to position the actuator at the bottom of the lifting column. PO Sur-reply 7. Patent Owner argues that, "[g]iven that *Rio* does not give the [person having ordinary skill in the art] any *reason* to place it in that location or any explanation of *how* it could be done, it is apparent that Petitioner's proposed combination is the product of hindsight."

Id. (citing *Metalcraft of Mayville, Inc. v. The Toro Co.*, 848 F.3d 1358, 1367 (Fed. Cir. 2017)).

Patent Owner also argues that "Petitioner's proposed combination changes *Rio's* principle of operation." PO Sur-reply 7–8 (referencing *In re Ratti*, 270 F.2d at 813). In responding to Petitioner's reply argument that Rio is a secondary reference that is not being modified, Patent Owner argues that "the law makes no distinction between primary and secondary references, it only asks whether the 'suggested combination of references would require a substantial reconstruction and redesign of the elements' or 'a change in the basic principles under which the . . . construction was designed to operate.'" *Id.* at 8 (citing *In re Ratti*, 270 F.2d at 813) (alteration in original).

Patent Owner also argues that Petitioner's simple design is not from the prior art but, instead, taken from the '571 patent. PO Sur-reply 8. Patent Owner adds that "simplicity does not establish obviousness; indeed, simplicity may represent a significant and unobvious advance over the complexity of prior devices." *Id.* at 9 (citing *Sensonics, Inc. v. Aerosonic Corp.*, 81 F.3d 1566, 1570 (Fed. Cir. 1996)).

(2) Reasons for combining CIII and Rio and reasonable expectation of success

Petitioner contends that a person having ordinary skill in the art "would have been motivated to combine CIII and Rio and would have had a reasonable expectation of success in doing so." Pet. 32. We recount the parties' positions with respect to motivation to combine, reasonable expectation of success, and the role of the state-of-the-art evidence in Petitioner's reasoning.

(a) Petitioner's contentions with respect to motivation to combine

As a threshold point, Petitioner contends that CIII and Rio are analogous art, as both references are in the same field of endeavor as the '571 patent—both references "describe swing-leg assemblies for road-construction machines." Pet. 32 (referencing Ex. 1002 ¶¶ 46–48, Ex. 1005, 3-17–18, Ex. 1006, Fig. 2).

Petitioner contends that both references "disclose sensors that measures a crawler track's angular position and a controller that rotates the crawler tracks based on received signals." Pet. 32 (referencing Ex. 1005, 8-105–06; Ex. 1006, 6:6–11, 8:39–47; Ex. 1002 ¶ 49). Petitioner reasons that "[c]ombining aspects of [CIII's and Rio's] swing-leg assemblies would have involved substituting one known element for another according to known methods to yield predictable results." *Id.* (referencing Ex. 1002 ¶ 49). Petitioner adds that Rio addresses the same problem as the '571 patent—manually repositioning swing leg assemblies on road machines. *Id.* at 32–33; *see also* Ex. 1002 ¶ 48 (Dr. Singhose declaring that Rio is reasonably pertinent to the problem that the '571 patent attempts to solve—eliminating the "time-consuming, costly" process of positioning a swing leg and crawler track).

Petitioner contends that a person having ordinary skill in the art would have been motivated to combine the teachings of CIII and Rio and, specifically, replace CIII's steering cylinder with Rio's rotary actuator. Pet. 33 (referencing Ex. 1002 ¶ 50). Petitioner contends that a rotary actuator would provide CIII's crawler track with a greater range of motion, as compared to CIII's steering cylinder. *Id.* (referencing Ex. 1009, 2:51–53, 7:36–60, Fig. 7; Ex. 1002 ¶ 50). Petitioner explains that "[g]reater range of

motion leads to greater maneuverability of the paver, faster adjustments in crawler-track position, and fewer risks to the safety of the operators." *Id.* (referencing Ex. 1002 ¶ 50). Petitioner adds that a person having ordinary skill in the art "would have further been motivated to implement Rio's rotary actuator to provide 'a compact apparatus' with high torque that achieves 'fine rotary steering control' and provides 'rotary motion without the need for complicated and bulky linkages.'" *Id.* (referencing Ex. 1006, 4:66–5:7; Ex. 1002 ¶ 50). As Petitioner and Dr. Singhose explain, CIII's steering cylinder is an example of a steering system with bulky linkages, for which Rio offers a solution. *Id.*; Ex. 1002 ¶ 50. Dr. Singhose declares that "[c]ombining aspects of [CIII's and Rio's] swing leg assemblies would have involved substituting one known element for another according to known methods to yield predictable results." Ex. 1002 ¶ 49.

Relevant to our decision here, Petitioner contends that "it would have been obvious to mount Rio's rotary actuator 44 at the bottom of CIII's jacking column." Pet. 34 (referencing Ex. 1006, 5:8–11; Ex. 1002 ¶¶ 54–59). Petitioner bases this contention, at least in part, on Rio's disclosure that "[i]n another of the preferred embodiments [that is, an embodiment where the second actuator is not positioned at the top of the lifting column], the second actuator 44 is positioned on lifting column 46 at a location spaced apart from the first actuator 42 along the lifting column axis 48." Ex. 1006, 5:8–11. Dr. Singhose declares that CIII's hydraulic pivot cylinder is not attached to CIII's jacking column, such that it would not interfere with a rotary actuator positioned anywhere along the vertical axis of the jacking column. Ex. 1002 ¶ 54. Dr. Singhose adds that CIII's steering cylinder attaches near the bottom of the jacking column. *Id.*

Petitioner also contends that positioning Rio's rotary actuator at the bottom of CIII's jacking column would simplify the jacking column's design, "because the guide tubes would no longer need to rotate relative to the outer cylinder." Pet. 34; *see also* Ex. 1002 ¶¶ 55–58 (explaining how CIII's jacking column could be modified so that the guide tubes would no longer need to rotate and that only the crawler track would rotate). Petitioner adds that "it was well known to position a rotary power drive at the bottom of a jacking column and use it to rotate a crawler track," relying on Littman, Miller, and Johns[24] in support. Pet. 34–35 (referencing Ex. 1007, 5:14–59, Figs, 4, 5; Ex. 1009, 7:35–58, Fig. 7; Ex. 1011 ¶ 20, Fig. 2; Ex. 1027, 3–4; Ex. 1002 ¶ 58).

Petitioner contends that a person having ordinary skill in the art would have sought a solution to CIII's "time-consuming manual adjustments for repositioning the swing legs and crawler tracks." Pet. 35 (referencing Ex. 1002 ¶ 60). Petitioner contends that Rio solves this issue through its control system. *Id.* at 36. Petitioner contends that a person having ordinary skill in the art "would have been motivated to implement Rio's rotation sensor 75, pivot sensor 83, and control system in the CIII machine to automate swing-leg and crawler-track rotation." *Id.* (referencing Ex. 1002 ¶ 63). Petitioner contends that CIII discloses a feedback system similar to Rio and that a person having ordinary skill in the art "would have thus found it obvious to use the feedback system described in Rio to simultaneously control swing-leg and crawler-track rotation in the CIII machine." *Id.* (referencing Ex. 1005, 8-105–106; Ex. 1002 ¶ 63).

---

[24] US Pub. 2003/0173130 A1, published September 18, 2003 (Ex. 1011, "Johns").

Petitioner contends that, with the modification that adds Rio's rotary actuator, a person having ordinary skill in the art "would have found it obvious to implement Rio's rotation sensor between the jacking column and crawler track to measure the rotation of each crawler track relative to the jacking column." Pet. 36 (referencing Ex. 1006, 6:6–9; Ex. 1002 ¶ 64). Petitioner concludes that the modification "would have been a routine substitution of one known sensor for another—CIII already discloses using a sensor (CIII's feedback pot) to measure rotation of each crawler track relative to the outer cylinder of the corresponding jacking column." *Id.* at 36–37 (referencing Ex. 1002 ¶ 64). Petitioner adds that Rio and other prior art disclose using rotation sensors at the bottom of a jacking column to sense crawler track rotation. *Id.* at 37 (referencing Ex. 1007, 5:34–42, 6:12–26, Figs. 4–6; Ex. 1009, 12:23–46; Ex. 1011 ¶ 21; Ex. 1002 ¶ 64).

Petitioner also contends that a person having ordinary skill in the art would have known from Rio's teachings "to implement pivot sensor 83 either as a rotary encoder associated with the shaft about which CIII's swing leg pivots or as a linear sensor associated with the hydraulic actuator for pivoting the swing leg." Pet. 37 (referencing Ex. 1006, 6:22–26; Ex. 1005, 3-17, 3-23; Ex. 1002 ¶ 64). Petitioner explains that these sensors "would allow CIII's controller to determine the angle of the crawler tracks relative to the frame regardless of the swing leg's location." *Id.* (referencing Ex. 1006, 8:31–59, 9:15–21; Ex. 1005, 8-105–06; Ex. 1002 ¶ 64).

> Petitioner contends that a person having ordinary skill in the art would have known that implementing Rio's sensors and control system in CIII would allow an operator to pivot the swing leg and automatically orient the associated crawler track in the paving direction or another desired direction without needing to

> rotate the swing leg and crawler track in separate steps or recalibrate the crawler tracks.

Pet. 37–38 (referencing Ex. 1005, 2-6, 3-17–18; Ex. 1006, 4:40–44; Ex. 1002 ¶ 65).

Petitioner also contends that "it would have been obvious to replace CIII's telescoping and slidable legs with swing legs, including the associated hinge bracket and hydraulic actuator, identical to the CIII-Rio swing leg on the front left of CIII's paver." Pet. 38 (referencing Ex. 1026[25], 1:64–67; Ex. 1002 ¶ 66). Petitioner explains that CIII discloses a paver configuration with multiple swing legs, and that "it was known that multiple swing legs could be attached to the front of a machine and that a swing leg could be attached to the back of a machine." *Id.* (referencing Ex. 1010, Fig. 1; Ex. 1026, 1:64–67, 4:3–14, Fig. 1); Ex. 1002 ¶ 66); *see id.* at 39–40 (discussing and presenting a modified version of an image from CIII (page 6-3), showing one swing leg on the front right end of the forward bolster and one swing leg near the middle of the aft bolster). Petitioner contends that a person having ordinary skill in the art would have known that "the aft leg could be located at different points along the aft bolster (or slidably mounted like the aft leg disclosed in CIII) or that the front bolster could be extended to the right edge of the center module, with the swing leg being positioned there too." *Id.* at 41 (referencing Ex. 1002 ¶ 67). Petitioner adds that, for the reasons discussed above with respect to modifying CIII with Rio's sensors, a person having ordinary skill in the art would have known to implement the sensors on the additional swing legs. *Id.* (referencing Ex. 1002 ¶ 67).

[25] U.S. Patent No. 6,890,123 (Ex. 1026, "Piccoli").

(b) Findings and conclusions – motivation to combine

We find, on the complete trial record, that a person having ordinary skill in the art would have understood Rio to disclose that its rotary actuator *could* have been positioned physically between a lifting column and crawler track, and, significantly, that a person having ordinary skill in the art *would have had reason* to modify CIII to so position a rotary actuator. We find that Petitioner adequately explains that CIII's steering cylinder would be eliminated, in favor of a rotary actuator between CIII's jacking column and crawler track. Pet. 62; Ex. 1002 ¶¶ 54–55, 58, 86–87; Pet. Reply 14–15. Both Petitioner and Dr. Singhose describe the modifications that would be made to the jacking column. *See* Pet. 62; Ex. 1002 ¶¶ 54–55, 58, 86–87. And, Petitioner describes why a person having ordinary skill in the art would make such a modification (along with adding Rio's control and sensor system, used in conjunction with the drive). *See* Pet. 32–41; Ex. 1002 ¶¶ 46–69.

We find that Rio does not limit the position of rotary actuator 44 (which steers the crawler track) to the top of its lifting column. Rio expressly discloses that rotary actuator 44 can be located on lifting column 46 along axis 48. Ex. 1006, 5:8–11; *see also id.* at Fig. 2 (depicting rotary actuator 44, lifting column 46, and lifting column axis 48). This express disclosure would include positioning actuator 44 on lifting column 46 at the bottom of the column.[26] Indeed, Rio teaches only one

[26] To the extent Patent Owner argues that positioning rotary actuator 44 at the bottom of lifting column 46 is not "positioned on the lifting column 46" as disclosed in Rio, we do not agree. *See* Ex. 1006, 5:9; PO Resp. 27 (seemingly arguing that positioning rotary actuator 44 at the bottom of lifting column 46 is not on the lifting column). To use a simple analogy, if a

limitation with respect to where on the lifting column to position the actuator—"a location spaced apart from the first actuator 42." *Id.* at 5:9–10. Actuator 42 projects and retracts ground engaging unit 20, and is attached to support device 40 (the swing arm). *Id.* at 4:40–44, Figs. 3, 4. Rio adds that:

> *Preferably*, the second actuator 44 is located at an upper portion 50 of the lifting column 46 and the first actuator 42 is located at a lower portion 52 of the lifting column 46. Such spaced apart positioning avoids problems caused by an accumulation of mechanical devices at a single location on the lifting column 46.

Id. at 5:11–16 (emphasis added). The record does not indicate that CIII, as modified based on Petitioner's proposal, would have mechanical devices other than the actuator at the bottom of the lifting column.

Positioning the actuator at the bottom of CIII jacking column would simplify the jacking column's design, "because the guide tubes would no longer need to rotate relative to the outer cylinder." Pet. 34; *see also* Ex. 1002 ¶¶ 56–58 (explaining how CIII's jacking column could be modified so that the guide tubes would no longer need to rotate and that only the crawler track would rotate). Patent Owner's reliance on *Sensonics, Inc.*, which Patent Owner argues supports a conclusion that the invention is not obvious, is inapposite. The court's statement that "simplicity *may* represent a significant and unobvious advance over the complexity of prior devices" was made in the abstract, rather than as a legal tenet specifically applied in the case. *See Sensonics, Inc.*, 81 F.3d at 1570 (emphasis added). The court went on to rigorously review the district court's findings and conclusions as to obviousness. *See id.* More significantly, the facts here do not demonstrate that the invention of the '571 patent is one that took a complex

---

person gets gum stuck on the bottom of his or her shoe, that gum is on the shoe.

system and simplified it. Rather, for the specific proposed modification of CIII, placing an actuator on the bottom of a jacking column serves to simplify CIII's jacking column structure. *See* Pet. 30; *see also* Ex. 1002 ¶¶ 55–58 (explaining how CIII's jacking column could be modified so that the guide tubes would no longer need to rotate and that only the crawler track would rotate).

The Federal Circuit's decision in *Intex Recreation Corp. v. Team Worldwide Corp.*, 860 F. App'x 717 (Fed. Cir. June 21, 2021), although non-precedential, is instructive here. In *Intex*, the Federal Circuit held that:

> The Board misapplied the obviousness standard, and misapprehended Intex's argument, when it fixated on whether the prior art literally disclosed Intex's theory of modifying Parienti only slightly by taking the pump attached to the outside of the mattress and recessing it partially within the mattress. Intex's argument regarding its proposed modification showed that Parienti was already close to the challenged claims, and only a slight change was needed to satisfy the broadest reasonable interpretation of "wholly or partially" recessing a pump. This showing, together with Intex's showing that numerous references since the late 1800s illustrated prior artisans' intuitive desire to recess pumps to save space, satisfied Intex's burden. The Board erred in concluding to the contrary.

Id. at 723. Like the facts in *Intex*, although no single reference may expressly illustrate Petitioner's theory of a power drive physically (and completely) located between a jacking column and crawler track, Rio's teachings of positioning its rotary actuator on the lifting column along the lifting column axis, and numerous prior art references in the record illustrating prior artisans positioning a rotary actuator over a wheel or crawler track to independently steer the wheel or track, sufficiently demonstrate that Petitioner's combination of CIII's and Rio's teachings teaches or suggests the subject matter of the "power drive" limitation. *See*

Ex. 1006, 5:8–11; Ex. 1007, Fig. 5; Ex. 1009, 7:35–60, Figs. 1–3, 5, 7; Ex. 1011, Fig. 2; Ex. 1027, 3–4.

We have considered Patent Owner's arguments, but do not find them sufficient, on the complete trial record, to demonstrate a deficiency in Petitioner's position. We do not agree with Patent Owner that Rio's failure to describe how its actuator would steer a crawler track without using the key/keyway system of the lifting column to connect the actuator to the crawler track is fatal to Petitioner's position. *See* PO Resp. 26. Indeed, as Patent Owner itself recognizes, such a system is "complex." *Id.* at 23, 24, 38, 42 (emphasis omitted); PO Sur-reply 4. As Petitioner and Dr. Singhose explain, a person having ordinary skill in the art would have been motivated to eliminate these complexities by locating the rotary actuator at the bottom of the lifting column, where the actuator could directly steer the crawler track. *See* Pet. 34; Ex. 1002 ¶¶ 54–58; *cf. KSR, Int'l*, 550 U.S. at 421 ("A person of ordinary skill is also a person of ordinary creativity, not an automaton.").

Patent Owner's argument that Petitioner fails to explain how Rio's express preference for locating its rotary actuator near the top of its lifting column suggests placing the actuator at the bottom of the column misunderstands Petitioner's complete contentions. *See* PO Resp. 27. As we discuss below, the suggestion comes from a person having ordinary skill in the art, *armed with the state-of-the-art evidence*, reading Rio's express disclosure of placing the rotary actuator on the lifting column along the lifting column axis. As such, Rio's express disclosure would not be "vague" to a skilled artisan. *See* PO Resp. 26; PO Sur-reply 5. That is, the "prior art . . . collectively . . . guide[s] an artisan of ordinary skill towards" the subject

matter of the power drive limitation. *Cf. Unigene Labs., Inc., v. Apotex, Inc.*, 655 F.3d 1352, 1361 (Fed. Cir. 2011) (cited at PO Sur-reply 5–6).

Also, we find Patent Owner's argument that Petitioner's proposed modification would require "entirely redesigning" Rio or change Rio's principle of operation inapposite. *See* PO Resp. 27; PO Sur-reply 7–8. As Petitioner argues, it does not propose modifying Rio at all. Instead, Petitioner proposes modifying CIII with Rio's teachings. *See* Pet. Reply 14; *cf., e.g.*, *In re Ratti*, 270 F.2d at 813 (concluding that Chinnery et al., as modified by Jepson, did not render a claim obvious, as "[t]his suggested combination of references would require a substantial reconstruction and redesign of the elements shown in *Chinnery et al.* as well as a change in the basic principles under which the *Chinnery et al.* construction was designed to operate" (emphasis added)) (cited at PO Sur-reply 7–8).

We also do not agree with Patent Owner that Petitioner's proposed combination is a product of hindsight. As we describe above, Petitioner's proposed combination is derived from an express disclosure in Rio as informed by the state-of-the-art evidence. That is, Petitioner's obviousness analysis considers the express teachings of a prior art reference (Rio) as informed by references defining the state-of-the-art prior to the date of the '571 patent. *See In re Cyclobenzaprine Hydrochloride Extended-Release Capsule Patent Litig.*, 676 F.3d 1063, 1073 (Fed. Cir. 2012) (explaining that "hindsight analysis is inappropriate because obviousness must be assessed at the time the invention was made") (cited in PO Sur-reply 9). Also, as described above, Petitioner explains how and why the teachings of CIII and Rio would have been combined. *Cf. TriVascular, Inc. v. Samuels*, 812 F.3d 1056, 1066 (Fed. Cir. 2016) ("Although the *KSR* test is flexible, the Board 'must still be careful not to allow hindsight reconstruction of references . . .

[redacted]

without any explanation as to how or why the references would be combined to produce the claimed invention.'" (quoting *Kinetic Concepts, Inc. v. Smith & Nephew, Inc.*, 688 F.3d 1342, 1368 (Fed. Cir. 2012))).

We now turn to Petitioner's use of state-of-the-art evidence, which is integral to Petitioner's position on why a person having ordinary skill in the art would have modified CIII to include Rio's rotary actuator between the jacking column and crawler track. *See* Pet. 33–34, 34–35, 62–63. Petitioner contends that rotary actuators located above a wheel or crawler track were well known in the art, including Rio, Littman, Miller, and Johns. Pet. 33–34 (referencing Ex. 1007, 3:31–5:52; Ex. 1009, 2:51–53, 7:36–60, Fig. 7; Ex. 1011 ¶ 20, Fig. 2; Ex. 1002 ¶¶ 49–50); *id.* at 34–35 ("Positioning a rotary power drive at the bottom of a jacking column and using it to rotate a crawler track was well known." (referencing Ex. 1006, 5:8–11, Ex. 1007, 5:14–59, Figs. 4, 5; Ex. 1009, 7:35–58, Fig. 7; Ex. 1011 ¶ 20, Fig. 2; Ex. 1027, 3–4; Ex. 1002 ¶ 58)); *see also* Tr. 21:14–21 ("So a person reading . . . Rio . . . would know that for decades, an option in the design community in this field is to put . . . the rotary drive at the very bottom of the lifting column or the jacking column and rotate the crawler track.").

For example, Littman discloses "a prime mover having a plurality of elongated, segmented legs with individual steerable drive means on each so as to enable the prime mover to be easily moved to and positioned properly in a wide variety of environments and terrains." Ex. 1007, 1:6–10. We reproduce an annotated version of Littman's Figure 5, from the Petition, below.

[redacted]

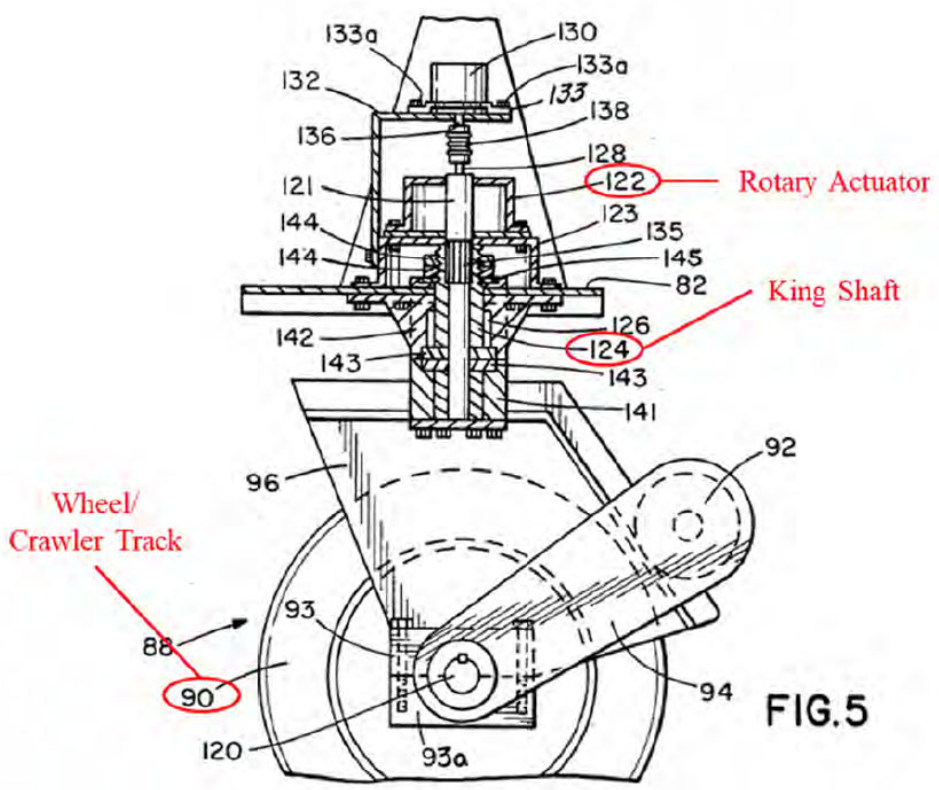

Pet. 87. Figure 5 depicts "a cross-sectional detail view of a drive means taken generally along the line 5-5 of" Figure 2. Ex. 1007, 2:28–29. "The rotating power furnished by the rotary actuator 122 . . . [is] transmitted through the king pin 124 to steer the wheels [or crawler track] 90." *Id.* at 4:19–21, 5:50–52.

In another example, Miller discloses a paver with a rotary steering housing located above a crawler track. Ex. 1009, 7:35–53, Figs. 1, 7. We reproduce Miller's Figure 14, as annotated in the Petition, below.

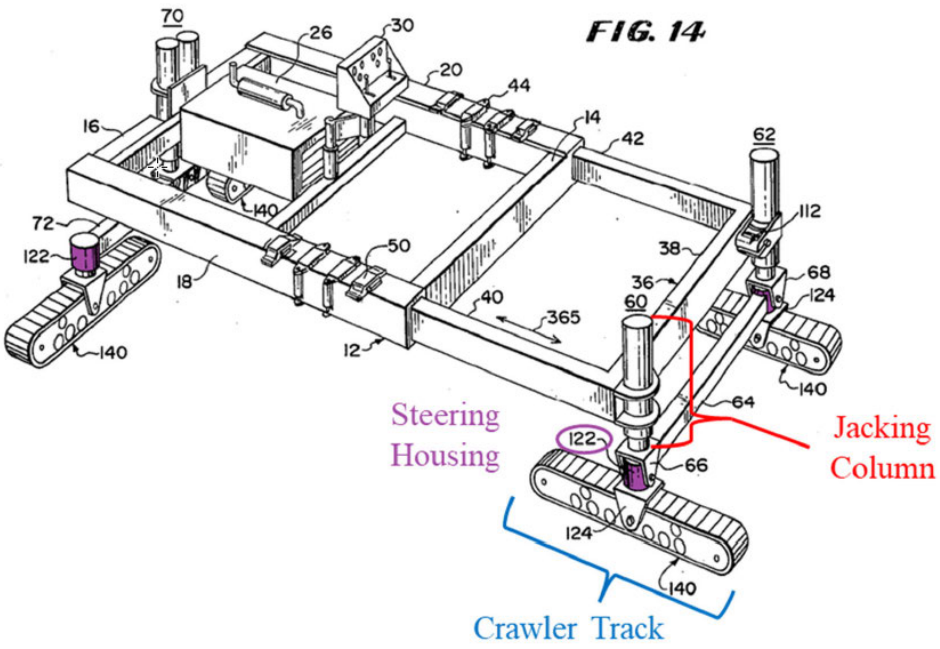

Pet. Reply 16. Figure 14 depicts Miller's paver in an extracted orientation. Ex. 1009, 9:65–67. Of interest here is steering housing 122, which is located just above the crawler track. *See also id.* at Fig. 7 (depicting details of steering housing 122). We reproduce Miller's Figure 7, below.

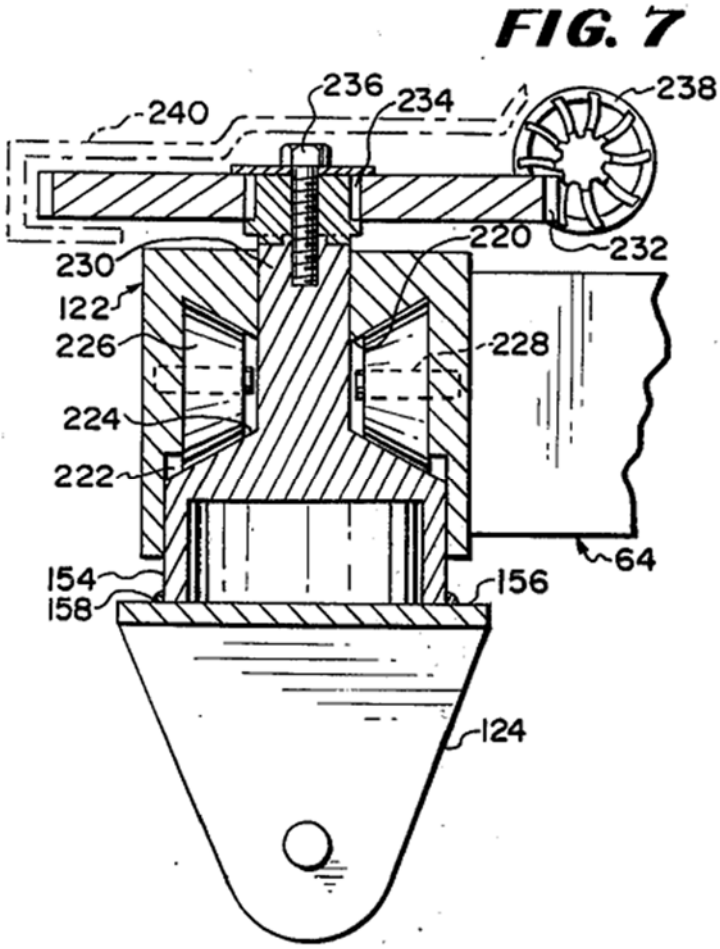

Figure 7 depicts "a cross-sectional view of a spindle-mount above a bogey-mount for a ground engagement means and a pinion gear assembly for 360° steering." Ex. 1009, 2:51–53. Steering housing 122 includes conical bearing surfaces 220 within base 154, which is attached to bogey-mount 124. *Id.* at 7:37–42. Base 154 includes conical bearing surface 224 to contain tapered roller bearings 226. *Id.* at 7:42–45. Driven gear 232 is driven by drive pinion gear 238, with a drive motor, mounted walking beam 64, driving pinion gear 238. *Id.* at 7:46–51. Figure 7 depicts components of a rotary actuator positioned physically between the crawler track and jacking column.

[redacted]

Johns discloses a remote operated work machine for construction and demolition with four wheels, each driven by a rotary actuator located just above the wheel. Ex. 1011 ¶¶ 2, 18, 20; *see also id.* at Fig. 2 (illustrating a wheel 32 with slew drive 42). GT-3200 provides a description of the GT-3200 slipform paver, which includes a "rotary actuator system that allows the track to turn up to 90 degrees either side of the straight-ahead line and does not operate on hydraulic cylinders." Ex. 1027, 3.

Patent Owner argues that Littman's disclosed machine is "far afield" of a slipform paver and "fails to disclose an upright jacking column." PO Resp. 29. Patent Owner adds that Littman's rotary actuator is not physically located between a jacking column and crawler track, because "the rotary actuator is located fully within what [Petitioner] refers to as the jacking column." *Id.* Patent Owner argues that Littman's rotary actuator is supported by outer section 82, and, as such, "unlike the claimed invention, *Littman's* actuator is not under load and is therefore not able 'to rotate the crawler track while a portion of the total machine load is carried by it,' as it would be if it were located as claimed." *Id.* at 29–30. Patent Owner also argues that Littman discloses an articulating leg, rather than a jacking column. *Id.* at 30.

With respect to Miller, Patent Owner argues that the driver motor for Miller's rotary actuator is positioned on the walking beam, not between the crawler track and jacking column. PO Resp. 31. Patent Owner argues that "there is no 'power drive' physically located between those support means and the corresponding tracks." *Id.*

Petitioner replies that Miller discloses steering housing 122 includes rotary actuator components and is located physically between the jacking column and crawler track. Pet. Reply 16 (referencing Ex. 1009, Fig. 14;

Ex. 1157, 76:4–82:18). Petitioner adds that the fact that the drive motor for Miller's actuator is situated on the walking beam "does not change the fact that several parts of the rotary actuator are *physically located* between the jacking column and the crawler track, and that this rotary drive rotates the crawler track relative to the jacking column (up to 180 degrees). *Id.* at 16–17 (referencing Ex. 1009, 7:35–60, Figs. 1, 7).

Patent Owner argues that Johns discloses a mobile work platform, which does not have a jacking column or crawler track. PO Resp. 32–33. Patent Owner argues that Johns's platform is not comparable in size to a large slipform paver. *Id.* at 32. With respect to the GT-3200, Patent Owner argues that its rotary actuator is within the jacking column. *Id.* at 33–34. Patent Owner adds that Petitioner abandoned using a rotary actuator to steer the GT-3200 because of torque concerns. *Id.* at 34.

Patent Owner argues that "the 'considerable elapsed time' of at least 25 years between the issuance of *Littman* and *Miller* and the earliest filing date accorded to the '571 [p]atent shows that physically placing a power drive between a swing leg's jacking column and the crawler track of a slipform paver was ***not*** obvious." PO Resp. 43–44 (citing *Leo Pharm. Prods., Ltd. v. Rea*, 726 F.3d 1346, 1356–57 (Fed. Cir. 2013)); *see also* PO Sur-reply 9 (citing *Leo Pharm. Prods.*, and stating that "*Miller* was filed ***thirty-four years*** before the '571 [p]atent's priority date").

We have considered Patent Owner's counter arguments, but do not find them sufficient, on the entire trial record, to demonstrate a deficiency in Petitioner's position that the state-of-the art evidence supports Petitioner's reasoning that a person having ordinary skill in the art would have been motivated to modify CIII by adding a rotary actuator as taught by Rio at the bottom of CIII's jacking column.

We agree with Petitioner that the state-of-the-art evidence of record suggests positioning a rotary actuator at a position directly atop a crawler track or wheel. Pet. 33–34, 34–35, 37; Ex. 1002 ¶¶ 49, 50, 134, 147; *see* Ex. 1007, 3:31–5:52, Figs. 4, 5; Ex. 1009, 2:51–53, 7:36–60, Fig. 7; Ex. 1011 ¶ 20, Fig. 2; Ex. 1027, 3–4. This suggestion in the art serves as a foundation for how a person having ordinary skill in the art would read Rio's disclosure regarding positioning its rotary actuator 44. *See Ariosa Diagnostics v. Verinata Health, Inc.*, 805 F.3d 1359, 1365 (Fed. Cir. 2015). That is, this evidence "serve[s] to document the knowledge that skilled artisans would bring to bear in reading" Rio to encompass positioning the rotary actuator at the bottom of the lifting columns. *See id.*

We find Patent Owner's arguments that the state-of-the-art evidence does not disclose power drives or jacking columns as recited in the claims inapposite. We do not understand Petitioner to rely on Littman, Miller, Johns, or GT-3200 as part of its combination under Ground 1, such that these references disclose the recited claim language. Instead, Petitioner relies on Littman, Miller, Johns, and GT-3200 to illustrate what an artisan of ordinary skill would have understood when considering the combination of CIII's and Rio's teachings. *See Ariosa Diagnostics*, 1365 ("Art can legitimately serve to document the knowledge that skilled artisans would bring to bear in reading the prior art identified as producing obviousness."). For example, as Petitioner argues, Miller discloses a slipform paver with a rotary actuator with many of its components positioned physically between the jacking column and crawler track, at least suggesting this location for an actuator. *See* Pet. Reply 16–17 (referencing Ex. 1009, 7:35–60, Figs. 1, 7).

To the extent that Patent Owner argues that Littman, Johns, and GT-3200 are not relevant to the state-of-the-art (*see* PO Resp. 29–30,

32–34), we do not agree. We find that the state-of-the-art references are *reasonably* pertinent to a problem being solved by the inventors of the ’571 patent. *See Chemours Co. FC, LLC v. Daikin Indus., Ltd.*, 4 F.4th 1370, 1376 (Fed. Cir. 2021) (“Although the Board may rely on other prior art to inform itself of the state of the art at the time of the invention, the scope of the relevant prior art is that which is ‘reasonably pertinent to the particular problem with which the inventor was involved.’” (quoting *Stratoflex, Inc. v. Aeroquip Corp.*, 713 F.2d 1530, 1535 (Fed. Cir. 1983)). All four references (Littman, Miller, Johns, and GT-3200) are reasonably pertinent to the problem of independently steering a wheel or crawler track of a construction vehicle.

Littman, for example, is concerned with a particular problem of ensuring that the drive means on the ends of each leg (for example, a wheel or crawler track) move and position the prime mover regardless of the position or extension of the stabilizer legs. Ex. 1007, 4:19–21, 7:60–67. Like the inventors of the ’571 patent, who were involved in the problem of coordinating the position of each crawler track as a swing leg rotates, Littman also coordinates the orientation of its drive means regardless of how its legs move relative to body 20. *Id.*; *see also id.* at 8:42–9:13 (describing how Littman’s control system coordinates the rotation of its drive means based on the orientation of a stabilizer leg); Ex. 1002 ¶¶ 141, 148.

Miller is a slipform paver that seeks to address 90-degree (or greater) rotation of its crawler track. *See, e.g.*, Ex. 1009, 1:60–67 (“Not only can the four tracks be turned 90° or more in either direction to make the machine operable along two different axes perpendicular to the frame to allow attachment of the tool on any of the four sides or in a straddle position, the frame can be moved along with all four tracks at any desired angle to the

frame and the power of one pair of tracks can be used to extend or retract the frame as desired along its telescoping positions."); Ex. 1002 ¶ 51 (discussing Miller's ability to rotate crawler track 180°).

Johns discloses a construction vehicle that is "highly maneuverable." Ex. 1011 ¶ 5; *see also id.* ¶ 20 ("The slew drive 42 allows the wheel bracket 36 to be rotated about a vertical axis through 180 degrees of motion, thus, allowing steering of the wheel 32."); Ex. 1002 ¶ 50 (discussing Johns's ability to rotate wheels 180°). The front track of the GT-3200 "features a unique rotary actuator system that allows the track to turn up to 90 degrees either side of the straight-ahead line and does not operate on hydraulic cylinders. This feature provides excellent maneuverability and tight radius capability." Ex. 1027, 3.

We recognize that Littman and Johns do not disclose slipform pavers. This fact, however, is not fatal to their contribution to the state-of-the-art. Instead, we weigh this fact as part of our weighing of the totality of the evidence directed to motivation to combine CIII and Rio.

Patent Owner's reliance on *Leo Pharmaceutical* is inapposite. First, the holding on which Patent Owner relies from *Leo Pharmaceutical* concerns an "obvious-to-try" analysis, which is not at issue here. *Leo Pharm. Prods.*, 726 F.3d 1356–57. Second, significant to the decision in *Leo Pharmaceutical* is the fact that it was the inventor that discovered the problem to be solved. *See id.* at 1353. According to Patent Owner, that is not the case here, as Patent Owner alleges a long-felt need. *See, e.g.*, PO Sur-Reply 12 (arguing that the '571 patent embodies advances for which there was a long-felt need).

Accordingly, upon review of the information in the Petition and corresponding evidence, we find, on the complete record, Petitioner has demonstrated, by a preponderance of the evidence, that CIII, as modified by Rio, discloses the subject matter of the "power drive" limitation. Specifically, we find that Petitioner has demonstrated, by a preponderance of the evidence, that a person having ordinary skill in the art would have positioned a rotary actuator as taught by Rio between the jacking column and crawler track.

We are persuaded, on the complete record, that a person having ordinary skill in the art would have been motivated to increase crawler track motion and maneuverability, specific motivations not rebutted by Patent Owner. *See* Pet. 33; Ex. 1002 ¶ 50. Also, we find that Rio expressly provides motivation for the modification. *See* Ex. 1006, 5:3–7 ("Such use of a rotary actuator provides a compact apparatus to achieve rotary motion without the need for complicated and bulky linkages, and may also be used to provide fine rotary steering control."); Pet. 33; Ex. 1002 ¶ 50.

We also find that the state-of-the-art evidence supports this motivation. *See* Exs. 1007, 1009, 1011, 1027 (disclosing maneuverable construction machines, where crawler tracks or wheels are independently driven by rotary actuators). Although Littman and Johns are not directed to slipform pavers, which lessens their weight, we still give this evidence some weight. Once again, we find Dr. Nelson's testimony instructive here—that the mechanical engineering aspects of smaller machines may be applied to heavy equipment, as the physics and math are the same. *See* Ex. 1157, 13:11–16:13.

We are also persuaded that, given the modification of CIII to add Rio's rotary actuator, a person having ordinary skill in the art "would have

been motivated to implement Rio's rotation sensor 75, pivot sensor 83, and control system in the CIII machine to automate swing-leg and crawler-track rotation." Pet. 36 (referencing Ex. 1002 ¶ 63). This system would "automatically orient the associated crawler track in the paving direction or another desired direction without needing to rotate the swing leg and crawler track in separate steps or recalibrate the crawler tracks." *Id.* at 37–38 (referencing Ex. 1005, 2-6, 3-17–18; Ex. 1006, 4:40–44; Ex. 1002 ¶ 65). Supporting our finding is the similarity between CIII's control system and Rio's control system, both of which provide a feedback loop to control the rotation of the crawler track.

(c) Petitioner's contentions with respect to reasonable expectation of success

We next turn to the parties' contentions with respect to a reasonable expectation of success in combining the teachings of CIII and Rio. Petitioner contends that "[c]ombining aspects of the Rio and CIII swing-leg assemblies would have involved substituting one known element for another according to known methods to yield predictable results." Pet. 32; *see* Ex. 1002 ¶ 54 ("CIII discloses the steering cylinder near the bottom of the jacking column, further confirming an expectation of success" in positioning a rotary actuator at the bottom of CIII's jacking column. (referencing Ex. 1005, 8-106)). Dr. Singhose opines that "[i]mplementing Rio's actuators, sensors, and control system on the CIII machine . . . would have constituted nothing more than a combination of well-known prior-art elements according to known methods to yield predictable results." Ex. 1002 ¶ 68. Dr. Singhose adds that Rio's "actuators, sensors, and control system already successfully allowed an operator to move a swing leg while orienting the associated crawler track in the travel direction." *Id.*

Dr. Singhose adds that a person having ordinary skill in the art "would have recognized that Rio's actuators, sensors, and control system when implemented on CIII's paver would function in the same manner as they functioned on Rio's machine." *Id.*; *cf.* Pet. 36–37 ("CIII already discloses using a sensor (CIII's feedback pot) to measure rotation of each crawler track relative to the outer cylinder of the corresponding jacking column.").

(d) Patent Owner's counter arguments and Petitioner's Reply and Patent Owner's Sur-reply arguments – reasonable expectation of success

Patent Owner argues that Petitioner has not demonstrated a reasonable expectation of success in combining CIII and Rio, and that Petitioner mischaracterizes the state of the art in supporting its reasons to combine. PO Resp. 35–43. Patent Owner argues that Petitioner's proposed modification of CIII with Rio's teachings "wholly elide[s] the redesign issues, steering torque requirements, and undesirable backlash that would have thwarted any reasonable expectation of success in replacing the *CIII* machine's hydraulic steering cylinder with *Rio's* rotary actuator." *Id.* at 35–36 (referencing Ex. 2030 ¶ 68).

Patent Owner argues that Petitioner proposes to replace CIII's steering cylinder with a rotary actuator, so "the rotary actuator must generate enough torque to match that generated by the hydraulic steering cylinder." Pet. 36–37. Patent Owner argues that such a substitution "would have required, at the very least, extensive experimentation to determine whether the rotary actuator under consideration could produce the necessary torque." *Id.* at 37. Patent Owner argues that Petitioner does not account for this experimentation nor does Petitioner demonstrate "that the references working together would be able to produce the requisite steering torque

needed to steer the CIII machine." *Id.* Patent Owner argues that, "because *Rio's* milling machine is far smaller than *CIII* and ***still*** requires the operator to raise the lifting column before engaging the rotary actuator, a [person having ordinary skill in the art] would recognize that *Rio's* design would not have generated the requisite torque to steer a large slipform paver." *Id.* (referencing Ex. 2030 ¶ 70, which cites to Ex. 1006, 8:1–9:11).

Patent Owner adds that Petitioner does not address that replacing CIII's hydraulic steering cylinder with a rotary actuator would require the jacking column to be significantly redesigned. PO Resp. 37–38. Patent Owner argues that Petitioner's proposed modification eliminates the keyway system taught in Rio for transferring torque from the rotary actuator to the crawler. *Id.* at 38.

Also, Patent Owner argues that a person having ordinary skill in the art "would understand that . . . any attempts at replacing the *CIII* machine's hydraulic steering cylinder with *Rio's* rotary actuator would have required, at the very least, extensive experimentation addressing and overcoming the undesirable backlash that would have resulted from the use of a rotary actuator." PO Resp. 39. Patent Owner argues that "neither [Petitioner] nor Dr. Singhose consider or address the undesirable backlash that would have frustrated any reasonable expectation of success." *Id.*

Patent Owner adds that Petitioner's own internal engineering analyses demonstrate that there is no reasonable expectation of success in modifying CIII to use a rotary actuator to steer a crawler track. PO Resp. 40 (referencing Exs. 2002, 2003, 2011; Ex. 2030 ¶ 76).

Petitioner replies that testimony from Patent Owner's witnesses supports Petitioner's positions with respect to a reasonable expectation of success in combining the teachings of CIII and Rio. Pet. Reply 11–12.

[redacted]

First, Petitioner argues that Mr. Breidenbach, one of Patent Owner's declarants, testified that his experience with milling machines qualified him to testify about pavers, and that the jacking columns on both machines "have very many similarities and few differences," countering Patent Owner's argument about the differences between Rio and CIII. Pet. Reply 12 (referencing Ex. 1160, 28:19–29:15). Next, Petitioner argues that Dr. Nelson testified that his experience with small machines qualified him to testify about heavy machinery, "because 'the physics principles are the same' and the '[s]tresses and strains, kinematics, all those controls, all those types of things are the same, whether they are applied to road construction equipment or to other machines and mechanisms.'" *Id.* at 12–13 (referencing Ex. 1157, 13:11–14:22, 15:4–16:16) (alteration in original).

Specific to the torque requirements, Petitioner replies that Rio discloses steering a crawler track with a rotary actuator, belying Patent Owner's concerns over torque. Pet. Reply 13–14 (referencing Ex. 1006, 9:15–42); *see also id.* ("One would have known from this disclosure that *Rio's* rotary actuator can perform the same operation (with success) in *CIII*, which also has crawler tracks that require steering.") (referencing Ex. 1002 ¶¶ 55–59, 64).

Specific to backlash, Petitioner replies that Rio discloses that worm-gear actuators may be used—the same type of actuators disclosed in the '571 patent. Pet. Reply 15 (referencing Ex. 1006, 5:1–3; Ex. 1001, 11:35–49). Petitioner adds that the '571 patent recognizes that such "actuators were commercially known and minimized backlash." *Id.* (referencing Ex. 1001, 11:46–56). Petitioner argues that Patent Owner "cannot tout the lack of backlash in a *commercially known* rotary actuator

described in its own patent and then accuse *that same rotary actuator design* of having undesirable backlash when it appears in a prior-art reference." *Id.*

Finally, Petitioner replies that Patent Owner's arguments directed to Petitioner's engineering analyses "miss the mark," because those analyses were based on Helac rotary actuators, which are not worm-gear drives, making Patent Owner's arguments "irrelevant" to a reasonable expectation of success of Petitioner's proposed modification. Pet. Reply 15–16.

(e) Findings and conclusions – Reasonable expectation of success

"The presence or absence of a reasonable expectation of success is . . . a question of fact." *Intelligent Bio-Sys., Inc. v. Illumina Cambridge Ltd.*, 821 F.3d 1359, 1366 (Fed. Cir. 2016). "The reasonable expectation of success requirement refers to the likelihood of success in combining references to meet the limitations of the claimed invention." *Id.* at 1367. We find, on the complete trial record, that a person having ordinary skill in the art would have had a reasonable expectation of success in combining Rio's teachings of steering a crawler track with a rotary actuator, including positioning the rotary actuator at the bottom of a jacking column. Specifically, we find that Rio's disclosure supports this finding. Rio discloses a heavy equipment machine with a jacking column and a crawler track where the crawler track is steered with a rotary actuator, which supports a finding that a person having ordinary skill in the art would have had a reasonable expectation of success in modifying CIII's steering mechanism with Rio's teachings of a rotary actuator to steer a crawler track. *See, e.g.*, Ex. 1006, 4:38–40, 51–53 ("[W]ork machine 10 includes a support device 40 connected between the machine frame 12 and the one ground engaging unit 20 . . . [and] includes a lifting column 46 adapted to

controllably raise and lower the associated connected ground engaging unit 20."), 4:44–47 ("[S]econd actuator 44 is associated with the support device 40 and is adapted to maintain the same rotational direction of the one ground engaging unit 20 in each of the projecting and retracted positions."), 4:61–5:3 ("[A]t least one of the first and second actuators 42, 44 is a rotary actuator. . . . [R]otary actuators such as worm or sun gear designs that are well-known mechanical implementations may . . . be employed with good result.").

Additionally, we find that the principles governing the use of rotary actuators on Rio's road machine would be equally applicable to CIII's machine. We base this finding on evidence in Rio that actuators, such as worm or sun gear actuators, are well known. Ex. 1006, 5:1–3. Also, we base this finding on Patent Owner's expert's testimony that principles used to design machines, whether on a small scale or large scale, are the same. *See* Ex. 1157, 14:8–16:13; *see, e.g.*, *id.* at 16:5–13 ("[T]he mechanical engineering principles are the same. . . . And the formulas are the same, and the math is the same, and the physics behind it is the same.").

We also find that the state-of-the-art evidence supports this finding. *See* Pet. 29–30; Ex. 1002 ¶ 55; *see also* Exs. 1007, 1009, 1011, 1027 (illustrating rotary actuators positioned adjacent to and above wheels or crawler tracks and used to steer the associated machines). We address Petitioner's contentions and Patent Owner's counter arguments directed to the state-of-the-art evidence above.

We have considered Patent Owner's counter arguments, but do not find them sufficient, on the entire trial record, to demonstrate a deficiency in Petitioner's position with respect to reasonable expectation of success in combining Rio's teachings with CIII. As an initial point, we note that the

record does not include any evidence that the redesign, torque, and backlash issues identified by Patent Owner are beyond the level of ordinary skill—a degreed mechanical engineer with at least two years of design, development, and operating experience with heavy equipment. This finding is consistent with the ’571 patent, which is written for a person having ordinary skill in the art, and does not disclose how to address these technical issues. *See, e.g.*, *Smith & Nephew, Inc. v. Rea*, 721 F.3d 1371, 1381–82 (Fed. Cir. 2013) (addressing a patent owner’s argument as to an alleged technical issue in the proposed combination, stating that “[t]his naturally raises the question of how [patent owner] managed to make such a combination work”).

We do not agree that Petitioner fails to address the redesign of CIII jacking column. *See* PO Resp. 37–38. Indeed, this “redesign” is at the core of one of Petitioner’s motivations for its proposed modification. By replacing CIII’s steering cylinder with a rotary actuator, CIII’s jacking column’s design would be simplified. *See* Pet. 34; Ex. 1002 ¶ 55. The redesign eliminates the need for Rio’s key system to transmit power from the rotary actuator through the lifting column to the crawler track, thus simplifying the power transmission. *See* Ex. 1002 ¶¶ 55–58. We credit Dr. Singhose’s testimony that modifying the jacking column to be fixed rotationally would simplify manufacture and maintenance of the jacking column and reduce the power needed to rotate the tracks, as only the tracks would rotate. *See* Ex. 1002 ¶ 58. We credit this testimony, in part, because it is consistent with our understanding of mechanical requirements of the modified device. For example, by not rotating, the jacking column would not be subjected to the wear and maintenance requirements of rotating machinery.

Also, with respect to sufficient torque, we find Patent Owner's argument inapposite. First, Patent Owner's argument assumes that the claims require the crawler track to be in contact with the ground when the rotary actuator rotates the crawler track ("on-the-fly steering"). *Cf.* Tr. 35:11–36:3 (arguing that Rio does not disclose that there would be sufficient torque for on-the-fly steering). Less torque would be required to rotate the crawler track when it is raised off the ground. *See id.* (recognizing that Rio discloses sufficient torque to rotate the crawler track when it is raised off the ground). Second, Rio discloses that sufficient torque can be generated to rotate the crawler track, both when engaged with the ground and raised off the ground. *See* Ex. 1006, 8:1–59 (describing rotating the crawler track (ground engaging unit 20) when the crawler track is off the ground), 9:15–42 (describing rotating ("steering") the crawler track when engaged with the ground).

With respect to backlash, we agree with Petitioner that Rio discloses the type of rotary actuators that reduce the backlash issue. *Compare* Ex. 1006, 5:1–3 (disclosing worm-gear rotary actuators), *with* Ex. 1001, 11:35–56 (disclosing that a slew or worm gear rotary actuator "effectively minimizes undesirable play or 'backlash'").

Patent Owner's reliance on Petitioner's engineering documents are inapposite. As Petitioner argues, these analyses focus on one type of rotary actuator, a Helac Rotary Actuator. *See* Ex. 2002, 1; Ex. 2003, 1; Ex. 2011, 1. Also, these documents reflect that Petitioner was attempting to place the actuator *within* the jacking column, necessitating a greater diameter column, not on the column at the bottom. *See* PO Resp. 38; Ex. 2002. Indeed, we find that these documents reflect a typical engineering process, where a certain component would be analyzed and accepted or rejected

based on the component's performance. We do not find that these documents indicate that Rio's teachings could not be used to modify the machine underlying CIII with reasonable success, in part, because Rio discloses alternative actuators, such as worm and sun gear actuators, in addition to Helac actuators. *See* Ex. 1006, 4:61–5:3.

Accordingly, we find, on the complete trial record, that Petitioner has demonstrated, by a preponderance of the evidence, that a person having ordinary skill in the art would have had reasons to combine Rio's teaching directed to its rotary actuators, sensors, and control system with CIII's control system, with a reasonable expectation of success. We weigh heavily Rio's own disclosure on using a rotary actuator in conjunction with a jacking column. We also agree with Patent Owner's declarant, Dr. Nelson, that any problem that may be encountered in combining the teachings of CIII and Rio is the type a mechanical engineer may encounter with many types of machines and mechanisms, and the physics and math involved in solving these problems are the same. *Cf.* Ex. 1157, 13:11–16:13.

(f) Conclusion-motivation to combine and reasonable expectation of success

In conclusion, for the reasons discussed above, we find that Petitioner has demonstrated, by a preponderance of the evidence, that a person having ordinary skill in the art would have had reasons to combine Rio's and CIII's teachings and would have had a reasonable expectation of success in the combination. We also find that Petitioner's reasons are adequately supported with rational underpinnings. *See KSR Int'l Co.*, 550 U.S. at 418 (stating that, to facilitate the analysis of an obviousness position, the proponent should provide "some articulated reasoning with some rational underpinning to support the legal conclusion of obviousness").

c) Conclusions–scope and content of the prior art and differences between the prior art and claimed invention–claim 1

For the reasons presented above, we find that Petitioner demonstrates, by a preponderance of the evidence, that the combination of CIII and Rio discloses the subject matter of claim 1. We further find that Petitioner demonstrates, by a preponderance of the evidence, that a person having ordinary skill in the art would have had reason to combine these teachings and a reasonable expectation of success in doing so.

d) Secondary considerations

We next turn to Patent Owner' evidence of secondary considerations (or objective evidence of nonobviousness) and Petitioner's rebuttal evidence. Objective evidence of nonobviousness, when present, must be considered as part of an obviousness inquiry. *Transocean Offshore Deepwater Drilling, Inc. v. Maersk Drilling USA, Inc.*, 699 F.3d 1340, 1349 (Fed. Cir. 2012). Notwithstanding what the teachings of the prior art would have suggested to one of ordinary skill in the art, the totality of the evidence submitted, including objective evidence of nonobviousness, may lead to a conclusion that one or more of the challenged claims would not have been obvious to one of ordinary skill in the art. *In re Piasecki*, 745 F.2d at 1471–72.

(1) Nexus

"In order to accord substantial weight to secondary considerations in an obviousness analysis, the evidence of secondary considerations must have a nexus to the claims, i.e., there must be a legally and factually sufficient connection between the evidence and the patented invention." *Fox Factory, Inc. v. SRAM, LLC*, 944 F.3d 1366, 1373 (Fed. Cir. 2019). "[A] patentee is entitled to a rebuttable presumption of nexus between the asserted evidence of secondary considerations and a patent claim if the patentee shows that the

asserted evidence is tied to a specific product and that the product 'is the invention disclosed and claimed.'" *Id.* Applying *Fox Factory*, the Board uses a two-step analysis in evaluating nexus between the claimed invention and the evidence of secondary considerations. *Lectrosonics, Inc. v. Zaxcom, Inc.*, IPR2018-01129, Paper 33 at 33 (PTAB Jan. 24, 2020) (precedential). We first consider whether the patent owner has demonstrated "that its products are coextensive (or nearly coextensive) with the challenged claims," resulting in a rebuttable presumption of nexus. *Id.* at 33. If not, that "does not end the inquiry into secondary considerations"; "the patent owner is still afforded an opportunity to prove nexus by showing that the evidence of secondary considerations is the 'direct result of the unique characteristics of the claimed invention.'" *Id.* (quoting *Fox Factory*, 944 F.3d at 1373–75).

Patent Owner contends that its "SmartLeg / AccuSteer technology featured in its slipform paver lineup is coextensive with and embodies the Challenged Claims of the '571 [p]atent." PO Resp. 47; *see also id.* at 48–56 (providing a chart comparing certain claim limitations of the Challenged Claims with annotated images of at least one paver model); Ex. 2029 (Breidenbach Decl.) ¶ 35 (providing the same chart).

Petitioner replies that Patent Owner is not entitled to a presumption of nexus because the pavers include additional technologies that are not directed to the claims of the '571 patent. Pet. Reply 20 (referencing Ex. 2019, 2–3). Petitioner also argues that that Patent Owner's claims vary in scope, such that the pavers cannot be substantially coextensive to the claims, an argument presumably directed to Patent Owner asserting the same coextensive argument in each of the proceedings before the Board. *Id.* (citing *Fox Factory, Inc.*, 944 F.3d at 1377). Petitioner also argues that

Patent Owner focuses on unclaimed features, such as on-the-fly steering and 90-degree steering. *Id.*

In its Sur-reply, Patent Owner argues that the unrebutted evidence demonstrates that the asserted objective indicia of nonobviousness "is attributable to [Patent Owner]'s SmartLeg/AccuSteer technology." PO Sur-reply 14. Patent Owner also argues that it established a presumption of nexus "because its SmartLeg/AccuSteer technology incorporated on [Patent Owner]'s slipform paver line is coextensive with and embodies the Challenged Claims of the '571 [p]atent." *Id.* at 20. Patent Owner also argues that "if the unclaimed features amount to nothing more than additional insignificant features, presuming nexus may nevertheless be appropriate." *Id.* at 21 (quoting *Fox Factory*, 944 F.3d at 1374).

"Whether a product is coextensive with the patented invention, and therefore whether a presumption of nexus is appropriate in a given case, is a question of fact." *Fox Factory, Inc.*, 944 F.3d at 1373. We find that Patent Owner is not entitled to a presumption of nexus, as we find that Patent Owner has not established that the SmartLeg/Accusteer technology is coextensive with the claims.

First, we find Patent Owner's claim chart presentation insufficient to support a presumption of nexus. In the mapping for claim 1, the images are for the S400 machine, but Patent Owner does not explain how the S600 and S850 machines map to claim 1. *See* PO Resp. 48–50. Similarly, Patent Owner does not direct us to any persuasive evidence that all these slipform pavers have this technology and whether each and every paver of these three models includes the technology. *See, e.g.*, Ex. 2045, 1 (listing SmartLeg and AccuSteer as options); Ex. 2019, 2 (listing SmartLeg as an option for the S600). Also, Patent Owner's support for its claim mapping is unpersuasive.

Patent Owner references Mr. Breidenbach's declaration, which in turn references descriptions of the S400 slipform paver, and a listing of patents that cover Patent Owner's products, and, in some cases, annotates certain features without providing additional support. *See* Ex. 2029 ¶ 35; *see, e.g.*, *id.* (identifying transducers and processors recited in claim 3 without providing supporting bases; and identifying ring gear and worm drives recited in claim 4, without providing additional bases for the identification).

Even if Patent Owner's claim mapping was sufficient, "[a] patent claim is not coextensive with a product that includes a 'critical' unclaimed feature that is claimed by a different patent and that materially impacts the product's functionality." *Lectrosonics, Inc.*, IPR2018-01129, Paper 33 at 32 (quoting *Fox Factory*, 944 F.3d at 1375). We also find that Patent Owner has not established that it is entitled to a presumption of nexus because of the presence of critical, unclaimed features, in the identified products. For example, the evidence indicates that the S400, S600, and S850 slipform pavers are each covered by ten U.S. patents. Ex. 2026, 1–2. Additional evidence identifies other critical, unclaimed features of these pavers. *See, e.g.*, Ex. 2045, 1 (indicating that TeleEnd and VariWidth are options on the S400 paver); Ex. 2024, 20 (identifying VariWidth and TeleEnd as patented technologies); Ex. 2014, 1–2 (indicating that VariWidth and TeleEnds are optional features on the S600); Ex. 2015, 1–2 (same); Ex. 2016, 4 (indicating that TeleEnds is a feature on the S600); Ex. 2020, 3 (indicating an S850 with TeleEnds). Also, contrary to Patent Owner's contention, we find that these additional features are not "insignificant." *See* PO Sur-reply 21; *Fox Factory*, 944 F.3d at 1374. As discussed above, VariWidth and TeleEnd are patented technologies, touted in commercial publications.

Patent Owner may still prove nexus by showing that the evidence of secondary considerations is the direct result of the unique characteristics of the claimed invention. *See* PO Sur-reply 14. We address this nexus with respect to the individual, asserted objective indicia, below.

(2) Long-felt need

Evidence of a long felt but unsolved need tends to show nonobviousness because it is reasonable to infer that the need would have not persisted had the solution been obvious—however, "[a]bsent a showing of long-felt need or the failure of others, the mere passage of time without the claimed invention is not evidence of nonobviousness." *See Iron Grip Barbell Co. v. USA Sports, Inc.*, 392 F.3d 1317, 1325 (Fed. Cir. 2004).

Patent Owner contends that "[i]n the early 2000s, contractors were requesting a slipform paver that could on-the-fly readjust the swing legs and crawler tracks and automatically reposition its swing legs and crawler tracks to enter the transport mode using 90 degree steering." PO Resp. 59 (referencing Ex. 2029 ¶ 38; Ex. 2031 ¶¶ 1, 4; Ex. 2032 ¶¶ 1, 4). Patent Owner explained that conventional slipform pavers required manual adjustments to reposition the crawler tracks. *Id.* (referencing Ex. 2029 ¶¶ 38, 39; Ex. 2031 ¶¶ 4, 5; Ex. 2032 ¶ 3). Patent Owner argued that, given the drawbacks of the manual adjustments, the industry felt the need to

> (1) reposition each swing leg and crawler track and rotate the crawler tracks to and from a 90 degree steering position without the need to repin the hydraulic steering cylinder; (2) transform the slipform paver from the paving mode to the transport mode, vice versa, using 90 degree steering; and (3) enable a wide range of crawler track steering angles to increase steering maneuverability.

Id. at 40 (referencing Ex. 2029 ¶ 40; Ex. 2031 ¶¶ 5–6; Ex. 2032 ¶¶ 1, 4).

Patent Owner argues that Petitioner was attempting to solve the 90-degree steering problem, an attempt that failed. PO Resp. 61 (referencing Ex. 2029 ¶ 41; Exs. 2002, 2003, 2011). Patent Owner argues that "Petitioner does not dispute that there was a long-felt need . . . for the invention disclosed and claimed in the '571 [p]atent." PO Sur-reply 13.

Patent Owner appears to argue a nexus between the claim as a whole (and, indeed, including subject matter of at least claim 3), the scope of which, Patent Owner argues, allows for rotating crawler tracks to 90-degree positions, and that allows for on-the-fly steering. *See* PO Resp. 60. We find, however, that Patent Owner's evidence of a long-felt need is entitled to little weight. As we discussed above in connection with our claim construction analysis, we conclude that the scope of the Challenged Claims of the '571 patent is broad enough to cover automatic repositioning of a crawler track when the crawler track is off the ground and on-the-fly steering. We find that the prior art already solved any need for a swing leg assembly that automatically positioned a crawler track over 90-degrees, at least when the crawler track is off the ground. *See* Pet. Reply 20 (arguing that the 90-steering and on-the-fly steering were known in the art); Ex. 1006, 7:46–8:65 (describing automatic repositioning of a crawler track of a swing leg); Ex. 1009, 6:26–34 ("[E]ach of the steering spindles 122 includes means to rotate the lower saddle or bogey 124 and the tractors 140 about their vertical axes at least 90° . . . . This rotation can be under finite control and accomplished sequentially, in unison or individually with the machine in motion or standing still as desired."), 7:35–60 (describing rotating a crawler track, automatically, 180 degrees or more with a rotary actuator), 8:27–55 (describing reorienting crawler tracks 90 degrees such that "[w]ith the tractors 140 oriented as shown in F[ig]. 1 the machine can be run upon a

trailer and be transported to and from work sites."); Ex. 1027, 3 ("The front track features a unique rotary actuator system that allows the track to turn up to 90 degrees either side of the straight-ahead line and does not operate on hydraulic cylinders. This feature provides excellent maneuverability and tight radius capability.").

The Federal Circuit's recent decision in *Zaxcom, Inc. v. Lectrosonics, Inc.*, No. 2020-1350, 2022 WL 499843 (Fed. Cir. Feb. 18, 2022), is instructive. The Federal Circuit held that the Board properly found that the objective indicia evidence "says nothing to suggest non-obviousness of one of the two types of systems and methods within the claims' coverage," where one of the embodiments within the scope of the claims was found in the prior art. *Zaxcom, Inc.*, 2022 WL 499843, *2. Accordingly, because there was no long-felt unsolved need for an embodiment covered by the claims, Patent Owner does not demonstrate a nexus between the claimed invention and a long-felt need.

Also, even if Patent Owner demonstrates a nexus, we find that this evidence is not entitled to much weight. The record evidence demonstrates that any need arose "in the early 2000s" (Ex. 2031 ¶ 4) or as late as 2009 (Ex. 2032 ¶ 5). The earliest priority claim for the '571 patent is 2010, indicating that not much time passed between an identified need and the claimed invention.

(3) Industry praise

Praise from industry participants, especially competitors, is probative as to obviousness because such participants "are not likely to praise an obvious advance over the known art. Thus, if there is evidence of industry praise of the claimed invention in the record, it weighs in favor of the nonobviousness of the claimed invention." *Apple Inc. v. Samsung Elecs.*

Co., 839 F.3d 1034, 1053 (Fed. Cir. 2016). Patent Owner directs us to evidence of industry praise for its on-the-fly steering and 90-degree steering for transporting its machines. PO Resp. 63–65 (referencing Ex. 2029 ¶¶ 44–46; Ex. 2031 ¶¶ 5–9; Ex. 2032 ¶¶ 1, 4–7; Ex. 2048, 2; Ex. 2049, 14; Ex. 2050, 4; Ex. 2051, 4; 2052, 3). Patent Owner argues that "Petitioner does not dispute that there was . . . industry praise for the invention disclosed and claimed in the '571 [p]atent." PO Sur-reply 13.

We find that the industry praise evidence is not entitled to significant weight. Patent Owner does establish that at least certain praise is directed to the SmartLeg/AccuSteer technology, which corresponds to the on-the-fly steering embodiment covered by the claims. *See* PO Resp. 63–65. None of the evidence, however, demonstrates praise from a competitor, the most compelling evidence. *See Apple Inc.*, 839 F.3d at 1053. Also, the evidence of record, with the exception of two declarations, provides more of an acknowledgment of the SmartLeg/AccuSteer technology, rather than praise. *See* Ex. 2014, 1–2 (describing how SmartLeg and AccuSteer technologies work, but falls short of praising the technologies); Ex. 2015, 2–3 (including similar language as is in Ex. 2014, suggesting the article is more the product of marketing); Ex. 2016, 4; Ex. 2048, 2 (providing a press release from Patent Owner); Ex. 2049, 14 (providing an "article" from Patent Owner); Ex. 2051, 4; Ex. 2052, 3. Also significant in this evidence is that other components are discussed, somewhat limiting the nexus to the claimed invention, and consequently, the weight of the evidence. *See, e.g.*, Ex. 2014, 1–2 (discussing versatility of S600's tractor, TeleEnds, VariWidth); Ex. 2015, 2–3 (same); Ex. 2016, 3 (characterizing the variable paving widths as "important"), 4 (discussing TeleEnds); Ex. 2049, 14 (discussing TeleEnd

and double telescopic tractor frame); Ex. 2051, 4 (describing TeleEnds); Ex. 2052, 2–3 (describing dowel bar inserter and PaveSmart 3D package).

We do acknowledge that Mr. Holley characterizes the "SmartLeg / AccuSteer technology [as] a game changer," and Mr. Greenwood called the technology "revolutionary." Ex. 2031 ¶ 7; Ex. 2032 ¶¶ 6, 7. These customers' testimony is entitled to some weight.

In conclusion, we credit Mr. Holley's and Mr. Greenwood's testimony and weigh this testimony in favor of Patent Owner. However, the totality of the evidence identified by Patent Owner does not provide persuasive evidence of industry praise, given the sources of the evidence, the neutral tone of the language, and, importantly, the positive discussions of other technologies associated with the pavers. As such, we do not give significant weight to this indicium of non-obviousness.

(4) Copying

The fact that a competitor copies technology suggests it would not have been obvious. *See Windsurfing Int'l, Inc. v. AMF, Inc.*, 782 F.2d 995, 1000 (Fed. Cir. 1986) ("[C]opying the claimed invention, rather than one within the public domain, is indicative of non-obviousness.").

> Our [reviewing court's] case law holds that copying requires evidence of efforts to replicate a specific product, which may be demonstrated through internal company documents, direct evidence such as disassembling a patented prototype, photographing its features, and using the photograph as a blueprint to build a replica, or access to the patented product combined with substantial similarity to the patented product.

Wyers v. Master Lock Co., 616 F.3d 1231, 1246 (Fed. Cir. 2010).

Patent Owner argues that "access to an *issued patent* coupled with circumstantial evidence regarding changes to a competitor's design is sufficient to support copying." PO Resp. 65 (citing *Liqwd, Inc. v.*

L'Oreal USA, Inc., 941 F.3d 1133, 1138 (Fed. Cir. 2019)). Patent Owner argues that Petitioner's evidence demonstrates that Petitioner was working on a solution to 90-degree steering, but failed. *Id.* at 65–66. Patent Owner contends that, after issuance of a patent in the priority chain of the '571 patent (US 8,459,898 B2, which issued June 11, 2013), [redacted] *Id.* at 66 (referencing Exs. 2002, 2003, 2011); *see, e.g.*, Ex. 2003 [redacted].

Patent Owner directs us to internal documents from Petitioner that state Petitioner [redacted] and to [redacted] PO Resp. 66 (referencing Ex. 2054, 3; Ex. 2055, 2) (alteration in original). Patent Owner also provides side-by-side comparisons of the similarities between one of Patent Owner's machines and one of Petitioner's machines, and the marketing terms used for the features. *Id.* at 67–68 (referencing Ex. 2029 ¶¶ 48, 49; Ex. 2009 ¶ 24). Patent Owner also provides a pictorial comparison between one of its machines and Wirtgen's (another competitor's) machine. *Id.* at 69. Patent Owner does not contend that Wirtgen copied Patent Owner's patented technology, nor does Patent Owner contend that Wirtgen had any access to Patent Owner's products or patents. *See id.*[27]

---

[27] In its Sur-reply, Patent Owner argues that "Petitioner misapprehends the significance of [Patent Owner's] evidence regarding Wirtgen's copying." PO Sur-reply 20. We find, however, the Patent Owner never asserts that Wirtgen copied its product or patent. Instead, Patent Owner asserts that Wirtgen's paver and Patent Owner's paver are similar. *See* PO Resp. 69. Similarity between products, without more, is insufficient to demonstrate copying. *See Wyers*, 616 F.3d at 1246; *Liqwd, Inc.*, 941 F.3d at 1137 ("[M]ore is needed than merely showing that similarity exists between the patent and the competitor's . . . product.").

Petitioner replies that [redacted] Pet. Reply 23 (referencing Ex. 1165, which provides the complete document associated with Patent Owner's Exhibit 2003, and includes [redacted]). Petitioner adds that the exhibit also demonstrates that slew drives are cheaper than the Helac actuator. *Id.* at 21–23 (referencing Ex. 1165, 6). Petitioner also argues that [redacted][28] *Id.* at 23.

We find, on the complete record, that Patent Owner's evidence of copying is entitled to little weight. Patent Owner seems to rely on Petitioner's access to an issued patent that discloses slew drives and Petitioner's [redacted] Although [redacted] the Challenged Claims are not limited to a slew drive. Also, Petitioner's

[28] Patent Owner argues that "Petitioner does not dispute . . . ***that Petitioner copied G&Z's patented design***." PO Sur-reply 13–14. As illustrated here, this argument is not correct, as Petitioner does dispute Patent Owner's contentions. To the extent that Patent Owner argues that Petitioner was somehow required to offer witness testimony that it did not copy Patent Owner's design, Patent Owner fails to provide any legal authority for such a requirement. *Cf.* Tr. 93:18–24 ("But what you don't have in front of you is anybody from their side saying that they didn't copy. I think that is absolutely something that you have to consider, is that with an allegation like that, the first thing that I would have done is put up a witness that said, no, we did not copy because those allegations you don't just let go unrebutted.").

engineering notes upon which Patent Owner relies states [redacted] Ex. 1165, 8. This statement, coupled with analyses on a [redacted] Indeed, Exhibit 1165, which includes analyses not provided in Exhibit 2003 by Patent Owner, supports a finding that [redacted]. *See id.* at 6–7 [redacted] As such, we find that any inference that Petitioner changed its design based on access to Patent Owner's issued patent is weak. *Cf. Liqwd, Inc.*, 941 F.3d at 1137 ("[I]f the only evidence of copying was a competitor's abandonment of one product design and subsequent adoption of a design similar to that of a patented product after issuance of the patent, that did 'not establish that [the competitor] engaged in copying.'") (second alteration in original).

We also agree with Petitioner that its document (Ex. 2055) states [redacted]. *See* Ex. 2055, 2 (emphasis added). We find, based on our review of the evidence [redacted]

As for the physical similarities between Patent Owner's and Petitioner's commercial machines, most of the similarities identified represent features on CIII. *Compare* Pet. 15–26 (discussing features of CIII), *with* PO Resp. 67–68. One difference between CIII and Petitioner's

GP-2400 is the slew drive. Although this similarity may support an inference of copying, the totality of the evidence does not support copying.

Accordingly, based on the complete trial record, Patent Owner fails to provide a nexus between what was allegedly copied (a specific type of power drive, a slew drive) and the Challenged Claims.

(5) Commercial success

"When a patentee can demonstrate commercial success, usually shown by significant sales in a relevant market, and that the successful product is the invention disclosed and claimed in the patent, it is presumed that the commercial success is due to the patented invention." *Galderma Labs., L.P. v. Tolmar, Inc.*, 737 F.3d 731, 740 (Fed. Cir. 2013). "[I]f the commercial success is due to an unclaimed feature of the device, the commercial success is irrelevant. So too if the feature that creates the commercial success was known in the prior art, the success is not pertinent." *Ormco Corp. v. Align Tech., Inc.*, 463 F.3d 1299, 1312 (Fed. Cir. 2006) (footnote omitted).

Patent Owner contends that introducing the SmartLeg/AccuSteer technology "translat[ed] directly into commercial success in the form of significantly increased paver sales, [sales] driven by those designs equipped with the SmartLeg/AccuSteer technology." PO Resp. 69–70 (referencing Ex. 2029 ¶ 52, which references Ex. 2037). Patent Owner contends that its market share eroded when Petitioner entered the market. *Id.* at 70 (referencing Ex. 2029 ¶ 53, which references Ex. 2035, 13; Ex. 2036, 10).

Patent Owner concludes that, because Patent Owner demonstrated significant sales of its S400, S600, and S850 slipform pavers, and these "successful product[s are] the invention disclosed and claimed in the patent,

it is presumed that the commercial success is due to the patented invention." PO Resp. 83 (alteration in original).

Petitioner replies that Patent Owner's commercial success evidence relies on market share reports (Exs. 2035 and 2036) based on Mr. Van Broekhoven's personal knowledge. Pet. Reply 23; *see* Ex. 2034 ¶ 1 (providing declaration of Mr. Van Broekhoven, stating that he is "the author of the documents marked Exhibits 2035 and 2036," that he "prepared the reports based upon [his] personal knowledge and belief"). Petitioner argues that Mr. Van Broekhoven provides no underlying basis for his testimony. Pet. Reply 23. Petitioner also argues that Exhibit 2037, which also forms the basis for Patent Owner's commercial success contentions, "contains conclusory allegations about sales allegedly lost to [Petitioner], [Patent Owner]'s alleged production capacity, adding patents online, and several allegations about [Petitioner]'s product lines." *Id.* at 24 (referencing Ex. 2037, 9, 11–12). Petitioner argues that "[t]here is no support in Ms. Ismaylova's declaration showing how or where she obtained this additional information." *Id.*; *see* Ex. 2033 (providing Ms. Ismaylova's declaration, which states that she "personally collected the sales data in" Ex. 2037).

Petitioner also argues that evidence demonstrates that Patent Owner's sales declined for a number of reasons, including Wirtgen entering the U.S. market, Patent Owner's machines not having features that matched demand, Patent Owner's lack of a sales and distribution network, Patent Owner's lack of brand recognition and inconsistent quality, and Patent Owner's inability to meet delivery schedules. Pet. Reply 24–25.

Patent Owner replies that Petitioner did not object to Patent Owner's evidence, did not cross-examine the declarants, and did not offer rebuttal

evidence. PO Sur-reply 16–17. Patent Owner argues that "not a single customer canceled an order despite a delivery delay." *Id.* at 19.

We find, on the complete record, that Patent Owner's commercial success evidence is entitled to very little weight. First, we find that Patent Owner has not established a nexus between the claimed invention and its paver sales. As we discuss above, contrary to Patent Owner's assertion, it is not entitled to a presumption of nexus. Again, as seen in the record evidence, other significant features, such as VariWidth and TeleEnds are components of these pavers. And the alleged commercial success is directed to paver sales, not AccuSteer/Smartleg sales. For example, one of Patent Owner's marketing documents touts its "[e]xclusive industry proven and requested options include[ing] AccuSteer, Smartleg, TeleEnd, VariWidth and more." Ex. 2024, 20; *see id.* at 21 (touting EGON operator control system, which Patent Owner claims makes it "easier to operate, reconfigure, diagnose, and manage a piece of concrete paving equipment"). In another example, Zachry Construction, a customer of Patent Owner, attributes success to the "dowel bar inserter (DBI) and a Leica PaveSmart 3D stringless machine control system." Ex. 2052, 2. "The DBI played a major role in Zachry's decision to buy the new paver." *Id.* at 2–3. "Another reason Zachry bought the . . . paver is for the telescoping ends on the machine." *Id.* at 3; *see also id.* (discussing the Leica PaveSmart 3D stringless machine control system). *Cf.* Ex. 2037, 6 (showing delivery of an S850 to Zachry).

Other evidence also fails to demonstrate persuasively a nexus between the commercial success and the SmartLeg/AccuSteer technology. For example, we find that, with the exception of 2016 and 2017, Patent Owner's total annual paver sales were consistent over the time period identified by

Patent Owner. *See* PO Resp. 82 (illustrating sales in chart). For example, evidence of record shows that the entire concrete paving industry, covering all types of pavers, experienced growth from 2014 to a peak in 2018, with a decrease in 2019. *See* Ex. 2036, 5–6. Also, the sales data shows comparable annual sales of non-swing leg pavers prior to 2010 (nine in 2002, ten in 2008) as total sales in some years after 2010 (eight in 2010, 12 in 2013, eight in 2014, ten in 2015).

The record evidence does show a decrease in the complex paver segment market share—the segment in which Patent Owner operates—for 2014 as compared to 2019, for Patent Owner and an almost commensurate increase by Petitioner. *See* Ex. 2036, 15. Patent Owner fails to provide persuasive evidence, however, that this change in market share is attributable to Petitioner selling complex pavers that include the claimed features. Sales had already decreased from twenty pavers in 2017, to six in 2019, when Petitioner began selling the paver that Patent Owner alleges copies its technology. *See* PO Resp. 82; *see also id.* at 78–79 (identifying the GP-2400); Ex. 2029 ¶ 48 (same); Ex. 2009 ¶ 24 (same). Patent Owner does not direct us to any evidence that the GP-3 and GP-4 pavers include the patented technology, and that sales were lost due to these machines.

(6) Conclusion – secondary considerations

We find, based on the complete record and the totality of the evidence directed to objective indicia of nonobviousness, that this evidence is entitled to some, but not significant, weight. We find that this evidence does not outweigh the other evidence supporting obviousness.

e) Conclusion

For the reasons discussed above, we weigh the underlying factual findings in our obviousness analysis in claim 1 and, based on this weighing

of evidence, we conclude that Petitioner has demonstrated, by a preponderance of the evidence, that claim 1 is unpatentable under 35 U.S.C. § 103 over CIII and Rio.

2. Dependent claims 2, 3, 5–7, 14, and 15

Dependent claims 2, 3, 5–7, 14, and 15 depend, directly or indirectly, from independent claim 1. We address the scope of the prior art, and the differences between the claimed invention and the prior art, for each dependent claim, below. Patent Owner does not individually dispute any of Petitioner's contentions with respect to these dependent claims. *See* PO Resp. 45 ("For at least these reasons [directed to claim 1], . . . [i]ndependent [c]laim 1 and its dependents are therefore patentable over the proposed modification.").

a) Claim 2

Claim 2 depends from claim 1 and recites "a hinge bracket interposed between the first swing leg and an associated surface of the forward bolster." Ex. 1001, 22:63–64. Petitioner contends that CIII discloses a hinged bracket arranged as recited. Pet. 63–67 (referencing Ex. 1005, 3-14, 3-23, 6-2, 6-6; Ex. 1002 ¶¶ 88–89). This contention is supported by annotated images from CIII. *See id.* at 64 (providing an annotated image from CIII (page 3-14), and identifying the swing leg, hinge bracket, and forward bolster), 65 (providing an annotated image from CIII (page 3-23), and identifying the swing leg, hinge bracket, and forward bolster), 66 (providing an annotated image from CIII (page 3-23), and identifying the swing leg, hinge bracket, forward bolster, and bolts fastening the hinge bracket to the module frame), 67 (providing an annotated image from CIII (page 6-2), and identifying the swing leg, hinge bracket, forward bolster, and bolt fastening the hinge bracket to the module frame).

[redacted]

Claim 2 further recites "an upright pivot shaft that engages the first swing leg that permits pivotal movements of the first swing leg relative to the hinge bracket about an upright axis in a substantially horizontal plane, the hinge bracket including a pivot connection point that is laterally spaced from the pivot shaft." Ex. 1001, 22:65–23:3. Petitioner contends that CIII discloses the upright pivot shaft as recited. Pet. 67–70 (referencing Ex. 1005, 3-17–18, 3-23; Ex. 1002 ¶¶ 90–91). This contention is supported by annotated images from CIII. *See id.* at 68 (providing an annotated image from CIII (page 3-23), and identifying the swing leg, hinge bracket, upright pivot shaft, and upright axis), 69 (providing an annotated image from CIII (page 3-17), and identifying the swing leg, hinge bracket, and the pivotal movement), 70 (providing an annotated image from CIII (page 3-17), and identifying the pivot shaft, lateral spacing, and pivot connection point).

Claim 2 further recites "a hydraulic actuator mounted on the hinge bracket, arranged to control the pivoting of the first swing leg relative to the center module." Ex. 1001, 23:4–6. Petitioner contends that CIII's swing cylinder corresponds to the recites hydraulic actuator. Pet. 70 (referencing Ex. 1005, 3-14, 3-17–18; Ex. 1002 ¶ 92). This contention is supported by annotated images from CIII. *See id.* at 71 (providing annotated images from CIII (page 3-14), and identifying the swing leg, hinge bracket, hydraulic actuator, and center module).

Based on our review of the complete trial record, including the identified evidence, we find that CIII discloses the subject matter of claim 2. *See* Ex. 1005, 3-14, 3-17–18, 3-23, 6-2, 6-6; Ex. 1002 ¶¶ 88–92.

b) Claim 3

Claim 3 depends from claim 2, and recites "a first angular position transducer between the first jacking column and the first crawler track,

emiting a first signal which is indicative of an angular orientation of the first crawler track relative to the first jacking column." Ex. 1001, 23:9–13. Petitioner contends that Rio's rotation sensor 75, which is associated with rotary actuator 44, corresponds to the recited first angular transducer. Pet. 71–72 (referencing Ex. 1006, 6:6–11; Ex. 1002 ¶¶ 93–95). Petitioner explains that "[s]ensor 75 generates a rotational position signal 124 'indicating the instantaneous rotation angle' of ground engaging unit 20 ('crawler track') that goes to controller 32." *Id.* at 72 (referencing Ex. 1006, 7:23–27, 8:38–39). Petitioner adds that a person having ordinary skill in the art would understand that Rio's sensor 75 provides the first signal, which "indicates the angular rotational orientation of the ground engaging unit 20 relative to the outer tubular member 60 of lifting column 46." *Id.* (referencing Ex. 1006, 6:6–11, 8:39–47, Fig. 2; Ex. 1002 ¶ 93).

Petitioner contends that "it would have been obvious to replace CIII's steering-cylinder sensor with Rio's rotation sensor 75, and to place Rio's sensor . . . near the intersection point between the bottom of the jacking column and the top of the crawler track," satisfying this limitation. Pet. 73 (referencing Ex. 1002 ¶ 94).

Claim 3 also recites "a second angular position transducer between the first swing leg and the hinged bracket, emitting a second signal which is indicative of an angular orientation of the first swing leg relative to the hinged bracket." Ex. 1001, 23:14–17. Petitioner contends that Rio's pivot sensor 83 corresponds to the recited second angular transducer. Pet. 75 (referencing Ex. 1006, 6:23–26, 7:19–23, 8:32–34, Fig. 3; Ex. 1002 ¶ 96). Petitioner adds that "[i]t would have been obvious to locate the sensor 83 in either CIII's hydraulic actuator or at the hinge bracket's pivot shaft." *Id.* at 76 (referencing Ex. 1002 ¶ 97). Petitioner explains that pivot sensor 83

generates a position signal that corresponds to the recited second signal, as it "'indicat[es] the instantaneous angular position of the swing arm 76 relative to the machine frame 12, . . . and sends the signal to controller 32." *Id.* (referencing Ex. 1006, 6:23–26, 7:19–23, 8:32–34; Ex. 1002 ¶¶ 96–97).

Claim 3 also recites

> a processor receiving the first signal and second signal and emitting a control signal for activating the first power drive and thereby rotationally move the first crawler track relative to the first jacking column for keeping the first crawler track oriented in the paving direction in response to changes of the first signal caused by pivotal motions of the first swing leg about the pivot shaft.

Ex. 1001, 23:18–25. Petitioner contends that "Rio discloses a controller 32 ('processor') that receives pivot position signal 122 and rotational position signal 124—the first and second signals," and "'actuates the first actuator 42 and begins moving the swing arm 76' about pivot pin 80 ('pivot shaft')." Pet. 76 (referencing Ex. 1006, 6:65–66, 7:11–13, Fig. 2; Ex. 1002 ¶¶ 99–100). Petitioner explains that controller 32 actuates actuator 42 to move swing arm 76 and pivot sensor 83 tracks the movement, and then uses signals 122, 124 to actuate second actuator 44 to rotate a crawler track to maintain the track in the same running direction. *Id.* at 76–77 (referencing Ex. 1006, 4:18–20, 4:47–50, 6:19–22, 8:31–47; Ex. 1002 ¶ 100).

Petitioner contends that "[i]t would have been obvious to implement Rio's control system so that CIII's controller—a processor already equipped to receive signals from sensors—receives the first and second signals and emits the claimed 'control signal.'" Pet. 78.

Upon review of the information in the Petition and corresponding evidence, we determine Petitioner has demonstrated, by a preponderance of the evidence, on the complete record, that CIII, as modified by Rio's

teachings of its control system, discloses the subject matter of claim 3, including the first and second angular position transducers and processor. *See* Ex. 1006, 4:18–20, 4:47–50, 6:6–11, 6:23–26, 6:65–66, 7:11–13, 7:19–27, 8:31–47, Fig. 2; Ex. 1002 ¶¶ 93–100). We address Petitioner's reasons for modifying CIII with Rio's control system above, in connection with our analysis of claim 1.

c) Claim 5

Claim 5 depends from claim 3, and recites "wherein the first power drive further comprises a slew gear drive, configured to receive the control signal and maintain the first crawler track in the paving direction." Ex. 1001, 23:31–34. Petitioner contends that Rio discloses that its rotary actuator can be a worm drive, which is the same as a slew drive, and, based on the proposed modification, would receive signals from the control system to orient the crawler track. Pet. 79 (referencing Ex. 1006, 4:61–5:3, 8:34-47; Ex. 1013, 84:12–86:17; Ex. 1001, 11:11–28; Ex. 1002 ¶ 102).

Based on our review of the complete trial record, including the identified evidence and Petitioner's reasoning, we find that CIII, as modified by Rio, discloses the subject matter of claim 5. We address Petitioner's reasons for modifying CIII with Rio's rotary actuator and control system above, in connection with our analysis of claim 1.

d) Claim 6

Claim 6 depends from claim 3 and recites "a feedback for maintaining an orientation for each of the first, second, and third crawler tracks at predetermined positions independently of angular inclinations of the first, second, and third crawler tracks relative to either the forward or aft bolsters." Ex. 1001, 23:35–40. Petitioner contends that CIII and Rio disclose feedback loops for orienting a crawler track. Pet. 80–81

(referencing Ex. 1005, 8-105–106; Ex. 1006, 8:38–47; Ex. 1002 ¶¶ 103, 104). Petitioner contends that a person having ordinary skill in the art "would have understood that this feedback control occurs independently of the track's angular inclination relative to the frame." *Id.* at 81 (referencing Ex. 1002 ¶ 104).

Based on our review of the complete trial record, including the identified evidence and Petitioner's reasoning, we find that the combination of teachings from CIII and Rio discloses the subject matter of claim 6. We address Petitioner's reasons for combining Rio's control system with CIII above, in connection with our analysis of claim 1.

e) Claim 7

Claim 7 depends from claim 6 and recites

> a feedback loop operatively coupled to the first swing leg and the first crawler track for angularly repositioning the first crawler track relative to the first swing leg in response to angular motions of the first swing leg about the pivot connection, thereby keeping the first crawler track oriented in a travel direction.

Ex. 1001, 23:41–47. Petitioner contends that "Rio describes that as its swing arm rotates, controller 32 uses pivot and rotation signals 122, 124 and actuators 42, 44 'to continuously and precisely offset the rotation caused by the pivoting,' resulting in the track remaining in the travel direction as its swing arm pivots. Pet. 81–82 (referencing Ex. 1006, 8:38–47). Petitioner contends that, under this control system, the crawler track is "continuously maintained 'parallel to the machine frame,'" that is, in the travel direction. *Id.* at 82 (referencing 1006, 8:38–47; Ex. 1002 ¶ 105).

Petitioner contends that a person having ordinary skill in the art "would have been motivated to implement Rio's feedback loop so that each of its crawler tracks can be automatically kept oriented in the travel direction

in response to the swing leg's angular pivoting motions about the pivot connection." Pet. 82 (referencing Ex. 1002 ¶ 106).

Based on our review of the complete trial record, including the identified evidence and Petitioner's reasoning, we find that the combination of teachings from CIII and Rio discloses the subject matter of claim 7. We address Petitioner's reasons for combining Rio's control system with CIII above, in connection with our analysis of claim 1.

f) Claim 14

Claim 14 depends from claim 1, and recites "a conveyor arranged to deliver semi-solid concrete to a hopper; the hopper arranged to receive and vibrate semi-solid concrete; and a profile mold, arranged to receive semi-solid concrete from the hopper and configured to lay down concrete in a shaped form." Ex. 1001, 25:6–14. Petitioner contends that CIII discloses a machine including a conveyor, hopper, and profile mold as recited. Pet. 83–85 (referencing Ex. 1005, 1-11, 1-13, 3-50, 4-2, 4-26; Ex. 1002 ¶ 108); *see id.* at 83 (providing an annotated image from CIII (page 1-3), and identifying the conveyor and hopper); 84 (providing an annotated image from CIII (page 4-2), and identifying the profile mold); 85 (providing an image from CIII (page 4-26), and identifying the shaped concrete resulting from using the CIII machine).

Based on our review of the complete trial record, including the identified evidence and Petitioner's reasoning, we find that CIII discloses the subject matter of claim 14.

g) Claim 15

Claim 15 depends from claim 1 and recites

> wherein at least one of: the first swing leg is laterally and movably connected to the forward bolster, the paving machine

> further comprises a second swing leg that is laterally and movably connected to the forward bolster, or the paving machine further comprises an aft swing leg that is laterally and movably connected to the aft bolster.

Ex. 1001, 25:15–22. Petitioner contends that CIII discloses a first swing leg configured as recited in the claim. Pet. 85 (referencing Ex. 1005, 3-14, 3-17; Ex. 1002 ¶ 109). Petitioner provides annotated versions of images from CIII, depicting a swing leg connected to a forward bolster, where the swing leg is connected such that it moves in the lateral direction. *See id.* at 86 (providing annotated images from CIII (page 3-14)).

Based on our review of the complete trial record, we find that CIII discloses at least a first swing leg that is laterally and movably connected to the forward bolster, as required in claim 15. Because claim 15 requires at least one of the three structural requirements recited in the claim, Petitioner has sufficiently demonstrated that CIII discloses the subject matter of claim 15.

h) Conclusion – dependent claims 2, 3, 5–7, 14, and 15

We have reviewed Petitioner's contentions with respect to these dependent claims and conclude, on the complete trial record, and based on the above findings (including findings related to the limitations of claim 1 and secondary considerations), that Petitioner demonstrates, by a preponderance of the evidence, that dependent claims 2, 3, 5–7, 14, and 15 are unpatentable under 35 U.S.C. § 103 over CIII and Rio.

D. Ground 2: Claim 4 as unpatentable over CIII, Rio, and Widdrington

Claim 4 depends from claim 1, and recites "wherein the first power drive further comprises a first helical worm gear drive and a second helical worm gear drive, diametrically opposed, wherein the first and second helical worm gear drives engage and drive a ring gear disposed between them."

Ex. 1001, 23:26–30. Petitioner contends that claim 4 is unpatentable over the combination of CIII, Rio, and Widdrington. Pet. 86–90.

Petitioner contends that Widdrington discloses the recited first helical worm gear drive. Pet. 89 (referencing Ex. 1008, 6:1–7, 6:13–16; Ex. 1002 ¶ 116). Petitioner provides an annotated version of Widdrington's Figure 10, identifying a ring gear and two diametrically opposed helical worm gears. *Id.* at 90. Petitioner concludes that a person having ordinary skill in the art would have been motivated to employ drives like those disclosed in Widdrington with Rio's disclosed rotary actuator in CIII's machine, as the drive provides a "more compact" design, "because two smaller worm-shaft members can be used instead of one larger one to provide the desired torque." *Id.* at 87 (referencing Ex. 1008, 1:13–18, 6:17–21; Ex. 1002 ¶ 112). Petitioner contends that using two worm-shaft members, "reduces wear and tear on the ring gear caused by engagement between the worm-shaft member and the gear, reducing the actuator's maintenance and repair costs." *Id.* (referencing Ex. 1008, 1:13–30, 6:27–30; Ex. 1002 ¶ 112). Petitioner adds that Widdrington's actuator "provides a high gear-reduction ratio that allows the two worm-shaft members/drives to easily turn the gear without allowing incidental rotational forces on the ring gear to overcome the friction between the worms and ring gear." *Id.* at 88 (referencing Ex. 1002 ¶ 113).

Patent Owner does not independently address Petitioner's contentions with respect to claim 4. *See* PO Resp. 43 ("[Petitioner] has not demonstrated by a preponderance of the evidence that [i]ndependent [c]laim 1 is obvious over *CIII* and *Rio*, and Ex. 1008 ("*Widdrington*") does not cure any of the above-noted deficiencies.").

We find, based on the complete record, that Petitioner has demonstrated, by a preponderance of the evidence, that a person of ordinary

skill would have had reason to modify the combined teachings of CIII and Rio to include the gear drive mechanisms taught by Widdrington with a reasonable expectation of success. *See* Ex. 1002 ¶¶ 112–113. We credit Dr. Singhose's testimony, in part, because it is consistent with Widdrington's disclosure. We also find, based on our review of Petitioner's evidence, and specifically Widdrington and Dr. Singhose's testimony, that Widdrington discloses the subject matter of claim 4. *See* Ex. 1008, 1:13–30, 6:1–7, 6:13–21, 6:27–30; Ex. 1002 ¶¶ 112–117).

Based on our findings based on Petitioner's contentions with respect to claim 4 (and findings related to claim 1, including secondary considerations), on the complete record, we conclude that Petitioner demonstrates, by a preponderance of the evidence, that dependent claim 4 is unpatentable under 35 U.S.C. § 103 over CIII, Rio, and Widdrington.

E. Ground 3: Claims 9–13 as unpatentable over CIII, Rio, and Smolders

Petitioner contends that dependent claims 9–13, which depend, directly or indirectly from claim 1, are obvious over the combination of CIII, Rio, and Smolders. Pet. 7, 90–102. Patent Owner does not independently address Petitioner's contentions with respect to Ground 3. *See* PO Resp. 43 ("[Petitioner] has not demonstrated by a preponderance of the evidence that [i]ndependent [c]laim 1 is obvious over *CIII* and *Rio*, and Ex. 1010 ("*Smolders*") does not cure any of the above-noted deficiencies."). We address Petitioner's contentions with respect to the scope and content of the prior art and the differences between the claimed invention and the prior art below.

1. Claim 9

Claim 9 depends from claim 1 and recites

> wherein the forward bolster is mechanically coupled to a second swing leg, an upright second jacking column secured to the second swing leg, and a rotary connection between the second jacking column and the second crawler track permitting relative rotational movements of the second crawler track and the second jacking column about an upright axis, and wherein the second swing leg further includes a second power drive between the second jacking column and the second crawler track, configured for translating relative rotational movements between the second jacking column and the second crawler track.

Ex. 1001, 24:4–15. Petitioner contends that much of the subject matter of claim 9 directed to the second swing leg is similar to that recited in claim 1 for the first swing leg, and that CIII discloses the subject matter. Pet. 90–91 (referencing Ex. 1005, 5-16, 6-6–8, 8-105–07; Ex. 1002 ¶¶ 119–122); *see also id.* at 91 (providing an annotated image from CIII (page 5–16, and identifying the second jacking column, telescoping leg, forward bolster, and second crawler track). Petitioner directs us to its reasoning for combining CIII and Rio, and contends that it would have been obvious to replace CIII's telescoping [leg] with a swing leg identical to the CIII-Rio swing leg." *Id.* at 92.

Petitioner also contends that "[a] design with two swing legs coupled to a forward bolster is further obvious in view of Smolders," which "discloses two pivoting devices 17 (swing legs) coupled to a front transverse beam 20 (forward bolster) via hinge brackets and slidable traverse member 22." Pet. 92 (referencing Ex. 1010, 5:5–31; Ex. 1002 ¶ 121); *see also id.* at 93 (providing an annotated version of Smolder's Figure 1, and identifying the forward bolster, hinged bracket, swing legs, and slidable traverse member). Petitioner contends that a person having ordinary skill in the art "would have understood from Smolders that substituting CIII's telescoping leg for a second swing leg like the one on the front left of CIII's

machine would have been an advantageous and routine substitution" as it "would have improved the paver's maneuverability." *Id.* at 93 (referencing Ex. 1002 ¶ 122).

Based on our review of the complete trial record, including the identified evidence and Petitioner's reasoning, we find that the combination of teachings from CIII, Rio, and Smolders discloses the subject matter of claim 9. We also find, for the reasons provided by Petitioner, that a person having ordinary skill in the art would have had reason to modify CIII-Rio with Smolders's teachings of multiple swing legs to improve paver's mobility. *See* Ex. 1002 ¶ 122; *see also* Ex. 1010, 1:54–61 (discussing that the front truck assemblies allow for extreme flexibility in positioning). We further find that one of ordinary skill in the art would have had a reasonable expectation of success in making the modification. Ex. 1002 ¶ 122.

2. Claim 10

Claim 10 depends from claim 9 and recites

> a hinge bracket interposed between the second swing leg and an associated surface of the forward bolster;
>
> an upright pivot shaft that engages the second swing leg that permits pivotal movements of the second swing leg relative to the hinge bracket about an upright axis in a substantially horizontal plane, the hinge bracket including a pivot connection point that is laterally spaced from the pivot shaft; and
>
> a hydraulic actuator mounted on the hinge bracket, arranged to control the pivoting of the second swing leg relative to the center module.

Ex. 1001, 24:16–28. Petitioner contends that the combined teachings of CIII, Rio, and Smolders disclose the subject matter of claim 10. Petitioner contends that a person having ordinary skill in the art "would have understood from Smolders and CIII that, where a paver has multiple swing legs, such as the modified CIII-Rio paver, connecting each swing leg to the

paver's frame with CIII's hinge bracket allows each swing leg to be easily attachable/detachable." Pet. 96 (referencing Ex. 1002 ¶ 126); *see also id.* at 95 (providing annotated images of Smolder's Figures 1 and 3, and identifying the forward bolster, hinged bracket, and swing legs).

Based on our review of the complete trial record, including the identified evidence and Petitioner's reasoning (including reasoning provided in support of its position for claim 9), we find that the combination of teachings from CIII, Rio, and Smolders discloses the subject matter of claim 10. For the reasons discussed above for claim 9, we also find that one of ordinary skill in the art would have made the combination with a reasonable expectation of success.

3. Claim 11

Claim 11 depends from claim 10 and recites

> a first angular position transducer between the second jacking column and the second crawler track, emitting a first position signal which is indicative of an angular orientation of the second crawler track relative to the second jacking column;
>
> a second angular position transducer between the second swing leg and the hinge bracket, emitting a second signal which is indicative of the angular orientation of the second swing leg relative to the hinge bracket; and
>
> a processor receiving the first signal and second signal and emitting a control signal for activating the second power drive and thereby rotationally moving the second crawler track relative to the second jacking column for keeping the second crawler track oriented in the paving direction in response to changes of the first signal caused by pivotal motions of the second swing leg about the pivot shaft.

Ex. 1001, 24:29–47. Petitioner directs us to its positions with respect to claim 3 for Ground 1 (directed to a control system with first and second angular position transducers and a processor) and its modification and

reasoning provided for claims 9 and 10 to support its position that the combination of CIII, Rio, and Smolders discloses the subject matter of claim 11. Pet. 96–97.

Based on our review of the complete trial record, including the identified evidence, Including Dr. Singhose's testimony (Ex. 1002 ¶¶ 127–130) and Petitioner's reasoning (including reasoning provided in support of its position for claims 3, 9, and 10, and for modifying CIII with Rio's control system), we find that the combination of teachings from CIII, Rio, and Smolders discloses the subject matter of claim 11. For the reasons discussed above for claim 9, we also find that one of ordinary skill in the art would have made the combination with a reasonable expectation of success.

4. Claim 12

Claim 12 depends from claim 11 and recites

> a feedback for maintaining an orientation of the first crawler track and the second crawler track relative to each other independently of angular inclinations of the first and second crawler tracks relative to the forward and aft bolsters; and
>
> a feedback loop operatively coupled to the second swing leg and the second crawler track for angularly repositioning the second crawler track relative to the second swing leg in response to angular motions of the second swing leg about the pivot connection, thereby keeping the second crawler track oriented in the paving direction.

Ex. 1001, 24:48–61. Petitioner directs us to its positions with respect to claims 6 and 7 for Ground 1, which recite a feedback and feedback loop. Pet. 98–99.

Based on our review of the complete trial record, including the identified evidence, including Dr. Singhose's testimony (Ex. 1002 ¶¶ 131–132) and Petitioner's reasoning (including reasoning provided in support of its position for claims 6, 7, 9, and 10, and for modifying CIII with

Rio's control system), we find that the combination of teachings from CIII, Rio, and Smolders discloses the subject matter of claim 12. For the reasons discussed above for claim 9, we also find that one of ordinary skill in the art would have made the combination with a reasonable expectation of success.

5. Claim 13

Claim 13 depends from claim 1 and recites

> wherein the aft bolster is mechanically coupled to an aft swing leg, an upright aft jacking column secured to the aft swing leg, and a rotary connection between the aft jacking column and the third crawler track permitting relative rotational movements of the third crawler track and the aft jacking column about an upright axis, and wherein the aft swing leg further includes a third power drive between the aft jacking column and the third crawler track, configured for translating relative rotational movements between the aft jacking column and the third crawler track.

Ex. 1001, 24:62–25:5. Petitioner contends that CIII discloses the subject matter of claim 13. Pet. 100 (referencing Ex. 1005, 3-16, 6-6–8, 8-105–07; Ex. 1002 ¶ 135); *see also id.* at 101 (providing an annotated image from CIII, at 3–16, and identifying the aft jacking column, slidable leg, aft bolster, and third crawler track).

Similar to its position for claim 9, Petitioner alternatively contends that Smolders discloses the multiple swing legs on a paver, and a person having ordinary skill in the art would have been motivated to include a swing leg on the aft bolster to improve maneuverability. Pet. 102 (referencing Ex. 1002 ¶¶ 136–137).

Based on our review of the complete trial record, including the identified evidence and Petitioner's reasoning (including reasoning for claim 9), we find that the combination of teachings from CIII, Rio, and Smolders discloses the subject matter of claim 13. For the reasons discussed

above for claim 9, we also find that one of ordinary skill in the art would have made the combination with a reasonable expectation of success.

6. Conclusions – dependent claims 9–13

We have reviewed Petitioner's contentions with respect to these dependent claims and conclude, on the complete trial record, and based on the above findings (including findings related to the limitations of claim 1 and secondary considerations), that Petitioner demonstrates, by a preponderance of the evidence, that dependent claims 9–13 are unpatentable under 35 U.S.C. § 103 over CIII, Rio, and Smolders.

F. Ground 4: Claim 8 as obvious over CIII, Rio, and Dahm

Petitioner contends that claim 8 is unpatentable over CIII, Rio, and Dahm. Claim 8 depends from claim 1 and recites "wherein the forward bolster is mechanically coupled to a laterally telescoping leg, configured to extend from the center module in a direction perpendicular to the forward end, wherein the second crawler track is mechanically coupled to the laterally telescoping leg via an upright second jacking column." Ex. 1001, 23:48–54. Petitioner contends that CIII discloses a forward bolster mechanically coupled to a laterally telescoping leg, configured as recited in claim 8. Pet. 106. Petitioner adds that its position with respect to CIII disclosing this subject matter is consistent with Patent Owner's position taken in litigation. *Id.* at 106–107.

Claim 8 also recites "an angular position transducer between the second jacking column and second crawler track, emitting a first position signal which is indicative of an angular orientation of the second crawler track relative to the second jacking column." Ex. 1001, 23:55–59. Petitioner directs us to its analysis of claim 11 which, in turn, directs us to Petitioner's analysis for claim 3. *See* Pet. 107, *see also id.* at 71–79

(providing Petitioner's analysis of claim 3), 96–97 (providing Petitioner's analysis of claim 11).

Claim 8 also recites "a linear position transducer between the laterally telescoping leg and the forward bolster, emitting a second signal which is indicative of the position of the laterally telescoping leg relative to the center module." Ex. 1001, 23:60–63. Petitioner contends that Dahm discloses extension sensor 55, corresponding to the recited linear position transducer. Pet. 108 (referencing Ex. 1030 ¶¶ 34, 73, 94, 133–134; Ex. 1002 ¶ 150).

Petitioner contends that a person having ordinary skill in the art would have been motivated to use Dahm's sensor "to precisely determine the leg's (and thus crawler track's) lateral position." Pet. 104 (referencing Ex. 1002 ¶¶ 143–145). Petitioner adds that "integrating a sensor on the telescoping leg [of CIII] would have allowed precise lateral adjustments to the crawler track's position and the programming of a maximum or minimum extension of the telescoping leg." *Id.* at 105 (referencing Ex. 1002 ¶ 144).

Petitioner contends that a person having ordinary skill in the art would have had a reasonable expectation of success in combining the teachings of CIII and Dahm, as the proposed modification involves combining well-known prior art elements according to known methods to yield predictable results," and that Dahm's "extension sensor would operate the same way [as on Dahm's machine] when implemented in the CIII-Rio paver's telescoping leg." Pet. 105 (referencing Ex. 1002 ¶ 145).

Claim 8 finally recites

> a processor receiving the first signal and second signal and emitting a control signal for maintaining the first crawler track and the second crawler track as oriented in the paving direction in response to changes of the first signal caused by motions of

> either the first swing leg or the laterally telescoping leg relative to the center module.

Ex. 1001, 23:64–24:3. Petitioner contends that Dahm discloses controller 132 that receives input signals from Dahm's sensors. Pet. 109 (referencing Ex. 1030 ¶ 94; Ex. 1002 ¶ 152). Petition also contends that CIII, as modified by Rio's control system, includes a processor as recited. *Id.* Petitioner contends it would have been obvious to have the controller resulting from the CIII-Rio combination to receive input signals from the extension sensor just as Dahm's processor receives the signals. *Id.* (referencing Ex. 1030 ¶ 85; Ex. 1002 ¶ 153).

Patent Owner does not independently address Petitioner's contentions with respect to claim 8. *See* PO Resp. 44 ("[Petitioner] has not demonstrated by a preponderance of the evidence that [i]ndependent [c]laim 1 is obvious over *CIII* and *Rio*, and Ex. 1030 ("*Dahm*") does not cure any of the above-noted deficiencies.").

Based on our review of the complete trial record, including the identified evidence and Petitioner's reasoning (including evidence and reasoning for claim 3 directed to Rio's angular position transducers and processor, and the reasons for modifying CIII with Rio's control system), we find that the combination of teachings from CIII, Rio, and Dahm discloses the subject matter of claim 8. We also find, for the reasons provided by Petitioner, that a person having ordinary skill in the art would have had reason to modify CIII with Dahm's extension sensor with a reasonable expectation of success, and have the CIII-Rio processor receive signals from the sensor.

IV. CONCLUSION

After considering all the evidence and arguments presently before us, we determine Petitioner has demonstrated, by a preponderance of the evidence, that the Challenged Claims are unpatentable.[29]

In summary:

Claims	35 U.S.C. §	Reference(s)/ Basis	Claims Shown Unpatentable	Claims Not Shown Unpatentable
1–3, 5–7, 14, 15	103	CIII, Rio	1–3, 5–7, 14, 15	
4	103	CIII, Rio, Widdrington	4	
9–13	103	CIII, Rio, Smolders	9–13	
8	103	CIII, Rio, Dahm	8	
Overall Outcome			1–15	

[29] Should Patent Owner wish to pursue amendment of the Challenged Claims in a reissue or reexamination proceeding subsequent to the issuance of this decision, we draw Patent Owner's attention to the April 2019 Notice Regarding Options for Amendments by Patent Owner Through Reissue or Reexamination During a Pending AIA Trial Proceeding, 84 Fed. Reg. 16,654 (Apr. 22, 2019). If Patent Owner chooses to file a reissue application or a request for reexamination of the challenged patent, we remind Patent Owner of its continuing obligation to notify the Board of any such related matters in updated mandatory notices. *See* 37 C.F.R. §§ 42.8(a)(3), (b)(2).

V. ORDER

In consideration of the foregoing, it is hereby:

ORDERED that Petitioner has proven by a preponderance of the evidence that claims 1–3, 5–7, 14, 15 of U.S. Patent No. 9,908,571 B2 are unpatentable over CIII and Rio;

FURTHER ORDERED that Petitioner has proven by a preponderance of the evidence that claim 4 of U.S. Patent No. 9,908,571 B2 is unpatentable over CIII, Rio, and Widdrington; and

FURTHER ORDERED Petitioner has proven by a preponderance of the evidence that claims 9–13 of U.S. Patent No. 9,908,571 B2 are unpatentable over CIII, Rio, and Smolders;

FURTHER ORDERED Petitioner has proven by a preponderance of the evidence that claim 8 of U.S. Patent No. 9,908,571 B2 is unpatentable over CIII, Rio, and Dahm;

FURTHER ORDERED that, pursuant to 35 U.S.C. § 318(b), upon expiration of the time for appeal of this decision, or the termination of any such appeal, a certificate shall issue canceling claims 1–15 of U.S. Patent No. 9,908,571 B2;

FURTHER ORDERED that the parties shall file, within 10 days of entry of this Decision, a joint motion to seal this Decision, and shall provide, along with the joint motion, an exhibit with a proposed redacted public version of this Decision; and

FURTHER ORDERED that, because this is a Final Written Decision, parties to the proceeding seeking judicial review of the decision must comply with the notice and service requirements of 37 C.F.R. § 90.2.

For PETITIONER:

Jason Stach
Luke McCammon
David Mroz
Sonja Sahlsten
Robert High
FINNEGAN HENDERSON FARABOW GARRETT & DUNNER LLP
Jason.stach@finnegan.com
Luke.mccammon@finnegan.com
David.mroz@finnegan.com
Sonja.sahlstren@finnegan.com
Robert.high@finnegan.com

For PATENT OWNER:

James Hannah
Jeffrey Price
KRAMER LEVIN NAFTALIS & FRANKEL LLP
jhannah@kramerlevin.com
jprice@kramerlevin.com