NOTE: This disposition is nonprecedential.

United States Court of Appeals for the Federal Circuit

NETFLIX, INC.,
Appellant

v.

AVAGO TECHNOLOGIES INTERNATIONAL SALES PTE. LIMITED,
Appellee

2022-1936, 2022-2168

Appeals from the United States Patent and Trademark Office, Patent Trial and Appeal Board in Nos. IPR2021-00045, IPR2021-00431.

Decided: July 23, 2024

HARPER BATTS, Sheppard Mullin Richter & Hampton LLP, Menlo Park, CA, argued for appellant. Also represented by JEFFREY LIANG, CHRISTOPHER SCOTT PONDER; JONATHAN RICHARD DEFOSSE, Washington, DC.

DAN YOUNG, Quarles & Brady LLP, Littleton, CO, argued for appellee. Also represented by KENT DALLOW; CHAD KING, King IAM LLC, Lone Tree, CO.

Before DYK, SCHALL, and HUGHES, *Circuit Judges*.

SCHALL, *Circuit Judge*.

Netflix, Inc. ("Netflix") filed two petitions for inter partes review ("IPR") of U.S. Patent No. 7,457,722 ("the '722 patent"), which is owned by Avago Technologies International Sales Pte. Limited ("Avago"). In two final written decisions, the Patent Trial and Appeal Board ("Board") determined that Netflix had not established any of the claims of the '722 patent to be unpatentable over the asserted prior art. *Netflix, Inc. v. Avago Techs. Int'l Sales Pte. Ltd.*, IPR 2021-00045, 2022 Pat. App. LEXIS 2294 (P.T.A.B. Apr. 19, 2022), J.A. 1–22 (claims 1–3, 5, 9–11, 13, 17–19, and 21) ("*-00045 Decision*"); *Netflix, Inc. v. Avago Techs. Int'l Sales Pte. Ltd.*, IPR 2021-00431, 2022 Pat. App. LEXIS 3294 (P.T.A.B. June 23, 2022), J.A. 23–31 (claims 4, 6–8, 12, 14–16, 20 and 22) ("*-00431 Decision*"). Netflix appeals. We have jurisdiction under 28 U.S.C. § 1295(a)(4)(A). For the reasons set forth below, we *vacate* and *remand*.

BACKGROUND

I

In a distributed computing system, multiple computers work together in a coordinated manner. Each computer, or node, may execute multiple instances of one or more applications,[1] and instances of an application may be created or destroyed as demand changes. '722 patent col. 1 ll. 30–36. "Application instances may also migrate from node to node in response to a hardware or software failure, or in response to a load-balancing algorithm." *Id.* col 1 ll. 37–39. The creation,

---

[1] An application is a piece of software. If a piece of software is installed and run on a computer, the software running on the computer is an "application instance." *See* '722 patent col. 1 ll. 8–49, col. 10 ll. 2–3.

destruction, and migration of application instances are referred to as "life cycle events." *Id.* col. 1 ll. 54–59.

The '722 patent is directed to monitoring performance in such an environment. *Id.* col. 1 ll. 53–56. Specifically, the '722 patent describes monitoring the life cycle events undergone by each application instance and relating those life cycle events to collected performance data for each application instance. *Id.* col. 3 ll. 35–40. The system and method of the '722 patent "collect[s] performance data for one or more application instances, detect[s] one or more instance life cycle events associated with the one or more application instances, correlat[es] the performance data to the one or more instance life cycle events, and stor[es] the correlated performance data." *Id.* col. 1 ll. 59–65. Claim 1 is representative:

> 1. A method, comprising:
>
> collecting performance data for one or more application instances, wherein the performance data is associated with the performance of said one or more application instances, wherein each application instance is a computer program executing on a computer system [(the "collecting step")];
>
> detecting one or more instance life cycle events associated with said one or more application instances, wherein said one or more instance life cycle events comprise at least one of: the creation of at least one of said one or more application instances, the destruction of at least one of said one or more application instances, and the migration of at least one of said application instances;
>
> correlating said performance data to said one or more instance life cycle events [(the "correlating step")]; and
>
> storing the correlated performance data.

Id. col. 9 l. 65–col. 10 l. 13 (bracketed labels added).

II

Netflix filed its two petitions for IPR of the '722 patent after Broadcom Corporation and Avago sued Netflix for infringement of the '722 patent and eleven other patents. *See Broadcom Corp. v. Netflix, Inc.*, No. 3:20-cv-04677 (N.D. Cal. 2020), previously No. 8:20-cv-00529 (C.D. Cal. 2020). In the two IPRs, claims 1–4, 6–12, 14–19, and 22 of the '722 patent were challenged as obvious in view of U.S. Patent No. 7,051,098 to Masters ("Masters"), while claims 5, 13, and 21 of the patent were challenged as obvious in view of Masters in combination with another prior art reference, U.S. Patent Publ. No. 2003/0036886 to Stone ("Stone"). J.A. 66; J.A. 2001.[2]

Masters describes a Resource Management Architecture ("RMA") that serves as a monitoring system for a distributed computing system having a plurality of hosts capable of executing multiple copies of a scalable application.[3] J.A. 518 col. 2 ll. 44–47, J.A. 519 col. 4 ll. 8–12. That is, Masters teaches "provid[ing] capabilities for monitoring system performance along with the ability to dynamically allocate and reallocate system resources as required." J.A. 519 col 4 ll. 27–30.

Figure 1A of Masters shows host A executing instantiated applications A1–AM. J.A. 491, J.A. 520 col. 5 ll. 45–61. Host

---

[2] Stone's teachings and the issue of motivation to combine Stone with Masters are not relevant for purposes of this appeal.

[3] Masters defines a "host" as "[a] device including a central processor controlled by an operating system." J.A. 519–20 (Table). Masters describes an application as "scalable" when "multiple copies [of the application] can be run and the copies will perform load-sharing across the copies." J.A. 536 col. 37 ll. 47–50.

A also has an instrumentation daemon[4] that receives "application status & performance data" from applications A1–AM. J.A. 491, J.A. 520 col. 5 ll. 52–61.

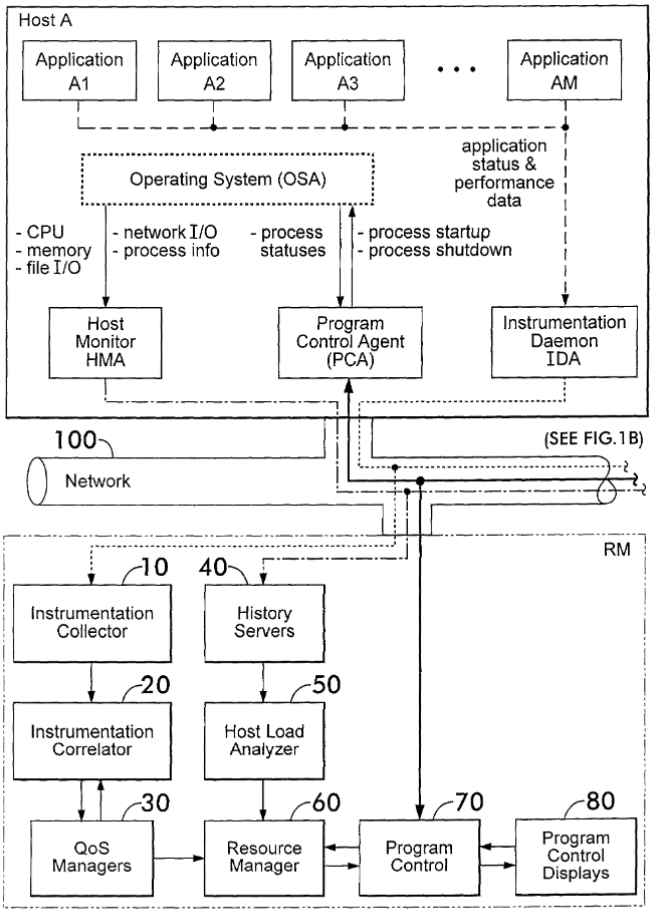

FIG.1A

J.A. 491.

---

[4] Masters defines a "daemon" as "[a] background process on a host or Web server . . . waiting to perform tasks." J.A. 519 (Table).

The RMA, labeled "RM" in Figure 1A, includes instrumentation collector 10 that receives data from the instrumentation daemon in each host over network 100 and provides data to instrument correlator 20. J.A. 520 col. 5 ll. 35–37, 62–65. Instrumentation correlator 20 provides correlation data to quality of service managers 30, which in turn provide information to resource manager 60. *Id.* col. 5 ll. 65–67, col. 6 ll. 40–42. Resource manager 60 communicates with program controller 70, which "sends startup and shutdown orders" to the program control agents in each host. *Id.* col. 6 ll. 35–49, J.A. 491. Masters teaches the need for "allowing autonomous start up and shut down of application copies on host machines to accommodate changes in data processing requirements." J.A. 518 col. 2 ll. 20–24.

Figures 9A and 9B represent a screen capture of Masters' "Decision Review Display," which "can provide a summary of allocation and reallocation actions taken by" the RMA. J.A. 532 col. 30 ll. 1–4, J.A. 505–06. "For each action, timing information regarding how long it took the Resource Management functions, e.g., the Resource Manager . . . and the Program Controller . . . , to both arrive at a decision and to enact the decided action are shown along with host fitness scores that were used in arriving at the allocation decision." *Id.* col. 30 ll. 4–10.[5]

---

[5] Thus, by way of illustration, Figure 9A depicts "Event# 36," where there was an "Application Overload" event on host "altair11." J.A. 505. This caused the RMA to decide to take the action "Application Scale Up" by scaling up an instance of application "Semi_Auto" on host "altair3." *Id.* Figure 9A also depicts the "action time" and the "response time" corresponding to that decision. *Id.* Figure 9B shows an aggregate, CPU, network, and memory "score" for hosts such as altair3. J.A. 506.

FIG.9A

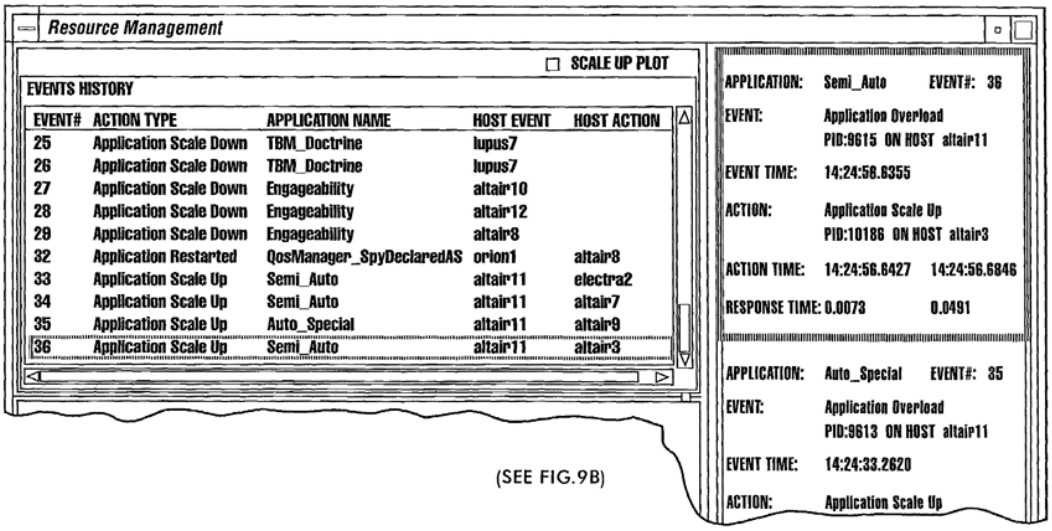

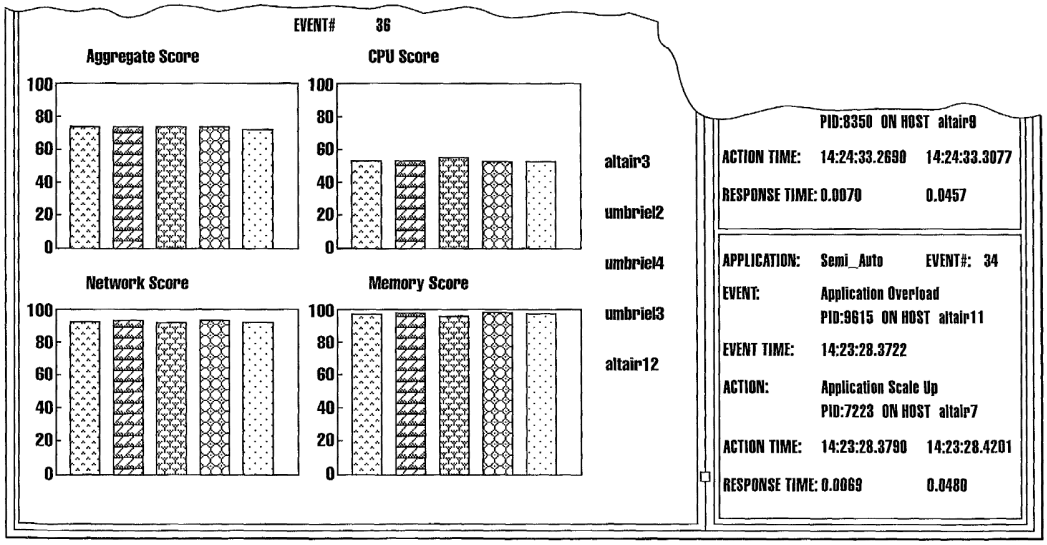

FIG.9B

J.A. 505–06.

Figures 8A and 8B of Masters reflect a screen capture of a representative Path Display, "which shows the status of key

system data flow paths consisting of multiple application stages." J.A. 532 col. 29 ll. 58–61, J.A. 503–04.[6] Masters explains:

> The number of copies of each application in the path is shown labeled with the host on which the application is running. In addition, it should be mentioned that as many as three real-time graphs can be produced to depict run-time performance and load metrics related to the applications in the selected data path.

Id. col. 29 ll. 62–67.

FIG.8A

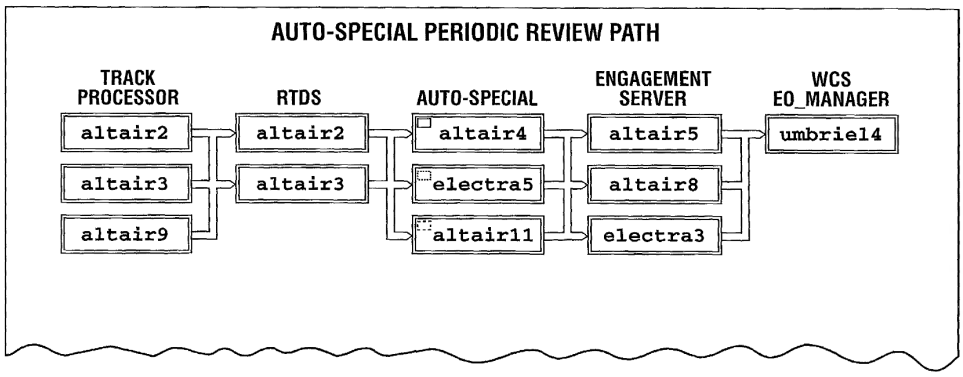

(SEE FIG.8B)

[6] A Path Display, such as that shown in Figure 8A, "[s]hows the status of applications in key end-to-end data flow paths along with performance and load graphs." J.A. 532 col. 29 ll. 29–31.

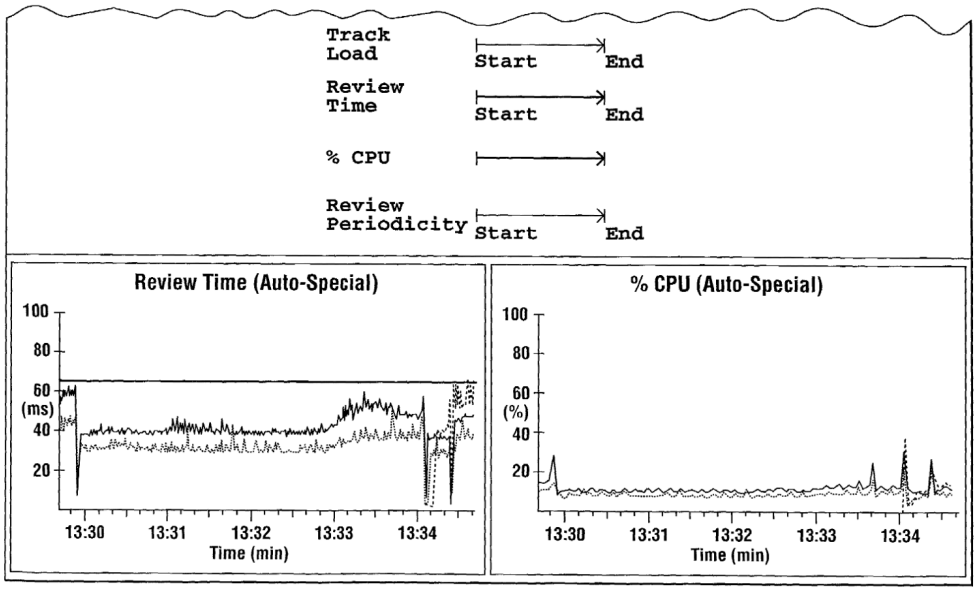

FIG.8B

J.A. 503–04.

Figure 8B of Masters provides line graphs of "review time" and CPU load for the "Auto-Special" application, including the three instances of that application on hosts altair4, electra5, and altair11. *Id.* Significantly, the graphs for review time and CPU load do not reflect data from host altair11 until approximately time 13:34. *Id.*

III

In the *-00045* and *-00431 Decisions*, the Board concluded that Netflix had not established the unpatentability of any claim of the '722 patent. J.A. 21, J.A. 30. The Board stated that Netflix had "fail[ed] to present a persuasive and cohesive showing that Masters teaches collecting performance data for one or more application instances that is correlated to one or more instance life cycle events," as required by the patent's independent claims. J.A. 20; *see also* J.A. 28. Accordingly, the Board held that the petitions did not satisfy the requirements of 35 U.S.C. § 312(a)(3), which states that a petition for IPR must identify "with particularity, each claim challenged,

the grounds on which the challenge to each claim is based, and the evidence that supports the grounds for the challenge to each claim." J.A. 5–6 (quoting 35 U.S.C. § 312(a)(3))[7]. In reaching its decision, the Board declined to expressly construe any claim terms of the '722 patent. J.A. 5.

The Board first determined that Netflix's petitions were inadequate because Netflix had not established that Masters teaches the collecting step. J.A. 7, 10–13, 20. In its petitions, Netflix had pointed to Masters' collection of "inter-processing times, throughputs, and latencies." J.A. 8 (quoting J.A. 90). It also had pointed to Masters' collection of "host computer performance data and network performance data associated with the performance of the application instances, including 'CPU utilization, memory utilization, network packets in, network packets out, and paging activity.'" J.A. 8–12 (quoting J.A. 90–91 (citing, *inter alia*, Masters Fig. 9B)). The Board concluded that Netflix had "not adequately establish[ed] that the ['722 patent's] claimed 'performance data for one or more application instances' includes such a broad variety of data as application-level data, tier-level data, and host-level data," as taught by Masters. J.A. 12.

The Board then addressed the correlating step of the '722 patent's claims. According to the Board, antecedent basis requires that the "performance data" that is "correlate[ed] . . . to said one or more instance life cycle events" in the correlating step is the same performance data that is "collect[ed]" for one or more application instances in the collecting step. J.A. 13. The petitions had relied upon Masters' Decision Review Display as depicting not only the collecting of performance data, but also the correlating of the collected performance data with the creation of a new application instance. J.A. 14–17. One example of this action, Netflix had

---

[7] The Board incorporated the analysis of the *-00045 Decision* into the *-00431 Decision*. J.A. 28–30. We therefore cite only to the *-00045 Decision* going forward.

argued, is Masters' "response time" for creating a new application, "Application Scale-Up," as reflected in Masters' Decision Review Display. J.A. 16–17 (citing J.A. 97–98, J.A. 505–06). The Board determined this teaching was insufficient because Masters' "response time" reflects the "*system's* response time," not the "*application instance's* response time." J.A. 17 (emphasis added). The Board similarly determined that Masters' teachings concerning the collection and correlation of host-level and network-level "health" data in the Decision Review Display did not fall within the claimed "performance data for one or more application instances." J.A. 17.

Finally, the petition had relied upon Figure 8B of Masters' as depicting a life cycle event because it purportedly shows the creation of a new instance of an application on host altair11 at approximately time 13:34, as shown on the "review time" and CPU load graphs. J.A. 18–19 (citing J.A. 103–06). The petitions asserted that Figure 8B "correlates" that life cycle event with the performance of the application instances shown in Figure 8A. J.A. 103–07. Addressing this aspect of the petitions, the Board stated:

> First, Petitioner has not established that "review time" and CPU load fall within the scope of the claimed "performance data for one or more application instances" (as mapped by Petitioner in the "collecting" limitations), and further, Figure 8B does not indicate that a life cycle event occurred at 13:34 nor otherwise make a correlation between a life cycle event and the data depicted on the line graphs. That the "review time of the other two application instances drops" after a creation event at 13:34 is an observation made by Petitioner having knowledge that the creation event occurred at 13:34 . . . ; Figure 8B itself does not reflect such a correlation. Moreover, we again note that Petitioner's discussion of "review

> time" and CPU load is not discernably connected to Petitioner's arguments advanced for the other claim limitations.

J.A. 19. The Board concluded that Netflix's petition "fail[ed] to present a persuasive and cohesive showing that Masters teaches collecting performance data for one or more application instances that is correlated to one or more instance life cycle events," as required by the independent claims. J.A. 20.

IV

Avago's infringement suit was stayed during the pendency of the IPRs. Following the issuance of the *-00045* and *-00431 Decisions*, the district court lifted the stay. After briefing in this appeal was complete, the district court held the claims of the '722 patent to be ineligible under 35 U.S.C. § 101 and dismissed the '722 patent from the district court litigation with prejudice. *See Broadcom Corp. v. Netflix, Inc.*, 3:20-cv-04677, Dkt. Nos. 418, 569, 647. We ordered supplemental briefing, asking the parties to address whether these events had rendered this appeal moot. In their supplemental briefs the parties argued that the appeal is not moot because Avago has not disavowed its rights to pursue an appeal of the court's ruling of ineligibility and because Avago has not granted Netflix a covenant not to sue for infringement of the '722 patent. Appellant's Suppl. Br. 4–5; Appellee's Suppl. Br. 9–13. We agree with Netflix and Avago that, under these circumstances, the appeal has not been rendered moot. We therefore proceed to the merits.

DISCUSSION

I

We review the Board's legal conclusions *de novo* and its factual findings for substantial evidence. *Becton, Dickinson & Co. v. Baxter Corp.*, 998 F.3d 1337, 1339 (Fed. Cir. 2021); *HTC Corp. v. Cellular Commc'ns Equip., LLC*, 877 F.3d 1361, 1367 (Fed. Cir. 2017).

II

A

Netflix's first argument on appeal is that the Board erred in finding that Masters does not teach "performance data for one or more application instances." This is so, Netflix argues, because, in arriving at this finding, the Board implicitly construed "performance data" to be limited to instance-level data. Appellant's Br. 50–55. According to Netflix, claim 1 of the '722 patent merely requires that the performance data be "associated with" the performance of one or more application instances. Netflix claims this could include performance data pertaining to an application instance, an application, and a group or "tier" of applications. Netflix also claims it could include host-level data associated with the performance of application instances executing on servers or devices, as well as performance data for a group or "tier" of such servers or devices. Appellant's Br. 9–10, 50–51. In support of this construction, Netflix points to the language of claim 1 itself, the dependent claims, and the specification of the '722 patent. *Id.* at 51–53. Netflix also relies on the testimony of its expert, Dr. Shenoy, and Avago's expert, Dr. Rosenblum, as well as Avago's infringement contentions before the district court in the related litigation. *Id.* at 54–55.

Although in its brief Avago focused on the Board's decision not to explicitly construe "performance data," Appellee's Br. 18, 44–45, at oral argument counsel for Avago acknowledged that the Board's determination that the collecting limitation was not taught by Masters' Figures 9A and 9B was based on an implicit construction of the term. Oral Arg. 16:00–16:26, 24:48–25:10. Avago argues that, due to antecedent basis, the "performance data" that is associated with the performance of the one or more application instances must be the same "performance data" that is collected. Appellee's Br. 39–42, 47–49. According to Avago, this requires that the data that is collected specifically correspond to *only* the performance of individual application instances, and that data

that includes, e.g., additional host operations would not satisfy the claimed "performance data." *Id.* at 48–49. Avago contends that Netflix's reliance on the dependent claims, the specification, and expert testimony does not take into account the plain language of the collecting step. *Id.* at 40–41, 46–50. In addition, Avago argues that, in its petition, Netflix did not rely on the specification, the dependent claims, or Avago's infringement contentions and that therefore we should disregard those arguments. *Id.* at 49–51 & n.8.

B

First, we agree with the parties that the Board implicitly construed "performance data," because the Board's findings establish the scope of that term to be limited to application instance-level data. *See HTC Corp.*, 877 F.3d at 1367 ("Despite no express construction . . . below, Board findings establishing the scope of the patented subject matter may fall within the ambit of claim construction."). For example, the Board stated that "[a]lthough 'performance data' is a broad term, Petitioner does not adequately establish that the claimed 'performance data for one or more application instances' includes such a broad variety of data as application-level data, tier-level data, and host-level data." J.A. 12–13. In addition, the Board indicated that it did not consider "host computer performance data," "network performance data," "aggregated data," or "system[] response time in creating an application instance," to possibly be performance data for an application instance. J.A. 12, 17.

Second, we agree with Netflix that the Board's implicit construction was incorrect. Claims 2 and 3, which depend from claim 1, clearly link the claimed "performance data" with the performance of "an application," not merely an "application instance." '722 patent col. 10 ll. 14–24. Similarly, dependent claim 5 recites that the claimed "one or more application instances are instances of a plurality of applications, wherein the plurality of applications are part of an application tier." *Id.* col. 10 ll. 30–36. The recitation of applications

and application tiers in the context of performance data in these dependent claims is persuasive evidence that the "performance data" of claim 1 is not limited to instance-level data, even though the performance data must be "*associated with*" the performance of the one or more application instances. *See Littelfuse, Inc. v. Mersen USA EP Corp.*, 29 F.4th 1376, 1380 (Fed. Cir. 2022) ("By definition, an independent claim is broader than a claim that depends from it, so if a dependent claim reads on a particular embodiment of the claimed invention, the corresponding independent claim must cover that embodiment as well.").

A construction not limited to instance-level data is also consistent with the specification, which is "the single best guide to the meaning of [the] disputed term." *Phillips v. AWH Corp.*, 415 F.3d 1303, 1315 (Fed. Cir. 2005) (en banc) (quoting *Vitronics Corp. v. Conceptronic, Inc.*, 90 F.3d 1576, 1582 (Fed. Cir. 1996)). The specification of the '722 patent makes clear that "performance data" is not limited to instance-level data but instead can include application-level and/or application-tier-level data. *See* '722 patent col. 1 ll. 56–59 ("Changes in performance at an instance level, application level or tier level may be related to application instance life cycle events such as creation, migration and destruction."), col. 1 l. 59–col. 2 l. 17 (discussing "the performance of the application" and "the performance of the application tier"). The specification also explains that "performance data" includes data pertaining to the performance of a server and/or a technology tier. *See id.* col. 7 ll. 26–29 ("The performance monitoring system may monitor performance data for particular application instances, applications, application groups, technology tiers, or any combination thereof."), col. 3 ll. 56–67 (discussing the capture of "performance metrics on servers running target applications" and consideration of "performance across multiple technology tiers (e.g., web clients, web servers, networks, application servers, database servers, storage servers, etc.)"), col. 4 ll. 3–8 ("The functionality of the measurement component 202 may be augmented with optional agent

modules that are customized to gather and analyze data for particular targets (e.g., web clients, web servers, networks, application servers, database servers, storage servers, etc.)."), col. 4 ll. 14–18 ("By permitting a user to 'drill down' through various tiers of hardware and software (e.g., individual servers), the discovery component 212 may provide a 'depth-wise' view of performance within each of the tiers that a target application crosses.").

Netflix's citation to the dependent claims and specification provide further support for the same argument it provided in reply to Avago's patent owner response before the Board, which laid the groundwork for the Board's implicit construction. *See* J.A. 996–97, 1223–24. We therefore reject Avago's argument that we should decline to consider this intrinsic evidence. *See Seabed Geosolutions (US) Inc. v. Magseis FF LLC*, 8 F.4th 1285, 1289–90 (Fed. Cir. 2021) ("The doctrine of waiver does not preclude a party from supporting its original claim construction with new citations to intrinsic evidence of record.").[8]

We conclude that the claim construction of the "performance data" limitation that is most consistent with the intrinsic evidence does not confine claim 1 to embodiments in which performance data pertains only to instance-level data. We therefore do not agree with the Board that the "performance data" of claim 1 is limited to instance-level data.

---

[8] Admissions from Avago's expert provide additional support for a construction of "performance data" that is not limited to instance-level data. *See* J.A. 1428–30. Reliance on expert testimony regarding the claim interpretation is permissible where the testimony is consistent with the interpretation required by the intrinsic evidence. *Genuine Enabling Tech. LLC v. Nintendo Co.*, 29 F.4th 1365, 1373 (Fed. Cir. 2022).

III

A

Netflix's second argument is that the Board erred when it determined that Masters' Path Display does not teach correlating collected performance data to life cycle events. Specifically, Netflix contends that, in addition to erring because it found the Path Display's review time and CPU load do not teach the claimed "performance data,"[9] the Board also erred when it concluded that the Path Display does not teach the correlating step because the display does not depict life cycle events or "correlating" the performance data to life cycle events. Appellant's Br. 57.

Before the Board, Netflix asserted in its petition that Masters' Path Display depicts the creation of an application instance at approximately time 13:34 in the Figure 8B line graphs. J.A. 103–07. Avago responded that the addition of an application instance to a line graph could merely represent transferring load to an already-existing application instance. J.A. 1007. In reply, Netflix cited Appendix J of Masters, which states that the Path Display depicts "Resource Manager action[s]" such as "scale ups, scale downs, and moves." J.A. 1234–37, J.A. 1338. Appendix J also states that (i) "scaling up" is "the starting of an additional copy of a process," (ii) a "scale down" is where "one copy is terminated," and (iii) a "move action terminates a copy of a process running on one host and starts it on another." J.A. 1338; *see also* J.A. 1339. In its Sur-Reply, Avago disputed Netflix's reliance on Masters' Appendix J as untimely. J.A. 1582–83.

On appeal, Netflix argues that the Board erred because it simply ignored Masters' Appendix J, declining to address the

---

[9] Having concluded that the Board's claim construction was erroneous, we do not reach Netflix's argument that Masters' Path Display teaches "performance data" even if that term is limited to instance-level data. *See* Appellant's Br. 58.

timeliness of Netflix's citation to it or to its contents. Appellant's Br. 60–62 (citing *Ultratec, Inc. v. CaptionCall LLC*, 872 F.3d 1267, 1269 (Fed. Cir. 2017)). Avago maintains its position that Appendix J was not provided in a timely manner and that therefore the Board was within its discretion to disregard it. Appellee's Br. 61–64.

B

As Netflix points out, the *-00045 Decision* and the *-00431 Decision* do not mention Masters' Appendix J. Neither do they analyze Netflix's argument that Appendix J teaches the correlating step or Avago's timeliness argument. The Board erred by failing to give due consideration to these arguments. *See Provisur Techs., Inc. v. Weber*, 50 F.4th 117, 123–24 (Fed. Cir. 2022) (vacating in part a final written decision when the Board did not not explicitly or implicitly address the patent owner's arguments); *Donner Tech., LLC v. Pro Stage Gear, LLC*, 979 F.3d 1353, 1358–60 (Fed. Cir. 2020); *see also Princeton Vanguard, LLC v. Frito-Lay N. Am., Inc.*, 786 F.3d 960, 970 (Fed. Cir. 2015) ("Though the Board is not required to discuss every piece of evidence, it cannot . . . disregard [the appellant's] evidence without explanation.").

The Board's failure to reach this issue does not mean we cannot, however, since we review *de novo* whether a petitioner's reply brief has improperly raised a new theory or argument. *Corephotonics, Ltd. v. Apple Inc.*, 84 F.4th 990, 1008–09 (Fed. Cir. 2023).[10] "Determining whether a reply has improperly raised a new theory or argument requires a comparison between the petitioner's petition and the petitioner's reply." *Id.* at 1008. We conclude that Netflix's reply brief and citation to Appendix J did not raise a new theory of

---

[10] In contrast, we review for an abuse of discretion the Board's determination of whether a petitioner's reply is responsive to the patent owner's contentions. *Corephotonics*, 84 F.4th at 1008.

unpatentability not presented in its petition. In its petition, Netflix posited that Masters "correlates an application instance life cycle event—the creation of a new application instance on altair11 at approximately 13:34—with the performance of each of the application instances executing the 'Auto-Special' application." J.A. 105. As its reply makes clear, Netflix subsequently cited to Appendix J to "confirm[it's] understanding" that Masters teaches that the Path Display depicts life cycle events and provides "an additional example of a path display . . . illustrating how the performance graphs are updated to reflect life cycle events as they occur." J.A. 1234. There is thus no "new" theory or argument presented with Netflix's citation to Appendix J.[11]

Further, as we have explained, material in a second document is considered incorporated by reference into a first document if the context "makes clear that the material is effectively part of the host document as if it were explicitly contained therein." *Advanced Display Sys., Inc. v. Kent State Univ.*, 212 F.3d 1272, 1282 (Fed. Cir. 2000); *see also Callaway Golf Co. v. Acushnet Co.*, 576 F.3d 1331, 1346 (Fed. Cir. 2009) (incorporation by reference requires that the host document "contain language 'clearly identifying the subject matter which is incorporated and where it is to be found'" (quoting *In re de Seversky*, 474 F.2d 671, 674 (CCPA 1973)). Whether and to what extent material has been incorporated by reference into a host document is a question of law. *Advanced Display Sys.*, 212 F.3d at 1283; *Callaway Golf Co.*, 576 F.3d at 1346.

Masters indicates that it "includes information such as source code listing in an Appendix section." J.A. 519 col. 4 ll. 34–39. In addition, Masters makes clear that Appendix J

---

[11] Nor are we persuaded that Netflix's reliance on Appendix J was untimely. Avago received the Appendix approximately six weeks before filing its patent owner response and had an opportunity to depose Netflix's expert after receiving Appendix J. *See* Appellee's Br. 62; J.A. 51.

pertains to the "Display Functional Group," which includes the Path Display. J.A. 545 col. 55 Table III, J.A. 532 col. 29 ll. 10, 29–31, 58–67. Further, Masters explains that Appendix J was provided on a CD-ROM that was "filed concurrently with the application" that ultimately issued as Masters. J.A. 545 col. 55 ll. 26–28. By clearly identifying Appendix J, detailing the subject matter it addresses, and pointing to where it is found, Masters makes clear that Appendix J is part and parcel to Masters itself. We therefore conclude that the Board erred when it declined to consider Appendix J for purposes of its analysis.

CONCLUSION

Because the Board based its determinations on its erroneous implicit claim construction of "performance data," we vacate the *-00045* and *-00431 Decisions* and remand for the Board to adopt a new construction that includes application instance-level, application-level, device-level, and tier-level data. On remand the Board should determine whether Masters, including its Decision Review Display and Path Display, renders the "collecting" and "correlating" limitations obvious in view of the Board's new construction. In addition, on remand, the Board should consider Masters' Appendix J in assessing whether Masters' Path Display teaches life cycle events and the claimed correlating step.

VACATED AND REMANDED

COSTS

No costs.