Trials@uspto.gov
571-272-7822

Paper 40
Date: October 4, 2022

UNITED STATES PATENT AND TRADEMARK OFFICE

BEFORE THE PATENT TRIAL AND APPEAL BOARD

TERMAX LLC
Petitioner,

v.

ILLINOIS TOOL WORKS INC.,
Patent Owner.

IPR2021-00724
Patent 10,683,882 B2

Before JAMES A. TARTAL, KEVIN W. CHERRY, and RICHARD H. MARSCHALL, *Administrative Patent Judges.*

MARSCHALL, *Administrative Patent Judge*.

JUDGMENT
Final Written Decision
Determining All Challenged Claims Unpatentable
35 U.S.C. § 318(a)
Dismissing Patent Owner's Motion to Exclude
37 C.F.R. § 42.64

Termax LLC ("Petitioner") filed a Petition (Paper 1, "Pet.") requesting an *inter partes* review of claims 1–20 of U.S. Patent No. 10,683,882 B2 ("the '882 patent") (Ex. 1001). Pet. 1. Illinois Tool Works Inc. ("Patent Owner") filed a Preliminary Response (Paper 12, "Prelim. Resp."). With our authorization, Petitioner filed a Preliminary Reply (Paper 13) and Patent Owner filed a Preliminary Sur-reply (Paper 14). Pursuant to 35 U.S.C. § 314, we instituted an *inter partes* review of claims 1–20 of the '882 patent on all presented challenges. Paper 15 ("Inst. Dec.").

After institution, Patent Owner filed a Response (Paper 19, "PO Resp."), Petitioner filed a Reply (Paper 26, "Pet. Reply"), and Patent Owner filed a Sur-reply (Paper 30, "PO Sur-reply"). In addition, Patent Owner filed a Motion to Exclude (Paper 33), Petitioner filed an Opposition to that Motion (Paper 35), and Patent Owner filed a Reply (Paper 36). An oral hearing in this proceeding was held on June 22, 2022, and a transcript of the hearing is included in the record (Paper 39, "Tr.").

We have jurisdiction under 35 U.S.C. § 6. This Final Written Decision is issued pursuant to 35 U.S.C. § 318(a) (2018) and 37 C.F.R. § 42.73 (2019). For the reasons set forth below, we determine that Petitioner has shown by a preponderance of the evidence that claims 1–20 of the '882 patent are unpatentable.

BACKGROUND

A. Real Parties in Interest

Petitioner identifies itself, Termax Company, and LISI Holding North America as its real parties in interest. Pet. 1; Paper 11 (Petitioner's Updated Mandatory Notices), 2.

Patent Owner identifies itself as the real party in interest. Paper 6 (Patent Owner's Mandatory Notices), 1.

B. Related Matters

Petitioner and Patent Owner identify the following related matter involving the '882 patent: *Illinois Tool Works Inc. v. Termax LLC*, Case No.1-20-cv-05416 (N.D. Ill.) (filed September 11, 2020). Pet. 1; Paper 6, 1.

C. The '882 Patent

The '882 patent relates to "connections incorporating push-in type retainers having downward biasing wing features which secure the retainer in place after insertion through an aperture." Ex. 1001, 1:21–23. The connections include "seals for creating a barrier to the penetration of moisture, dust and noise through the aperture in which the retainer is secured." *Id.* at 1:24–26. Automobiles often include such connections to secure molding or other surface structures to underlying body panels or support beams. *Id.* at 1:32–34. According to the '882 patent, the overall connection assembly typically works in conjunction with other components to establish a "zero gap" condition between the underlying sheet metal panel and outer molding. *Id.* at 1:57–61. The existence of a gap may lead to undesirable rattling noises as well as the introduction of dirt and water between the underlying support panel and the molding. *Id.* at 2:3–8. Prior art efforts address the gap problem by incorporating various sealing structures, which the '882 patent seeks to improve upon. *See id.* at 2:13–3:3.

Figure 1 of the ’882 patent is reproduced below.

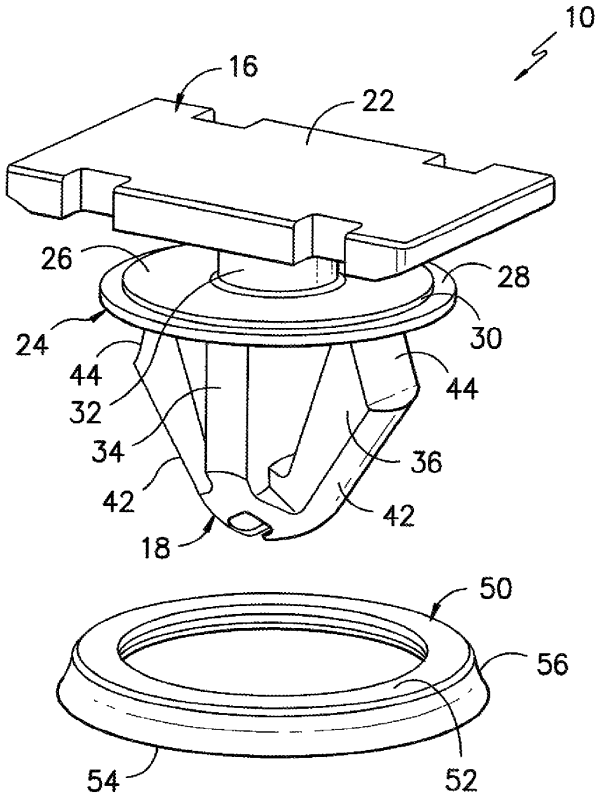

Figure 1 shows retainer 10, which includes retainer head 16 and snap engaging clip portion 18. Ex. 1001, 4:35–36. Figure 1 also depicts lower collar 24 and perimeter seal 50, which includes seal body portion 52, flared sealing foot 54, and living hinge 56 at the intersection of body portion 52 and sealing foot 54. *Id.* at 4:61–64, 5:47–48, 6:10–15, 6:24–27.

Figure 3 of the ’882 patent is reproduced below.

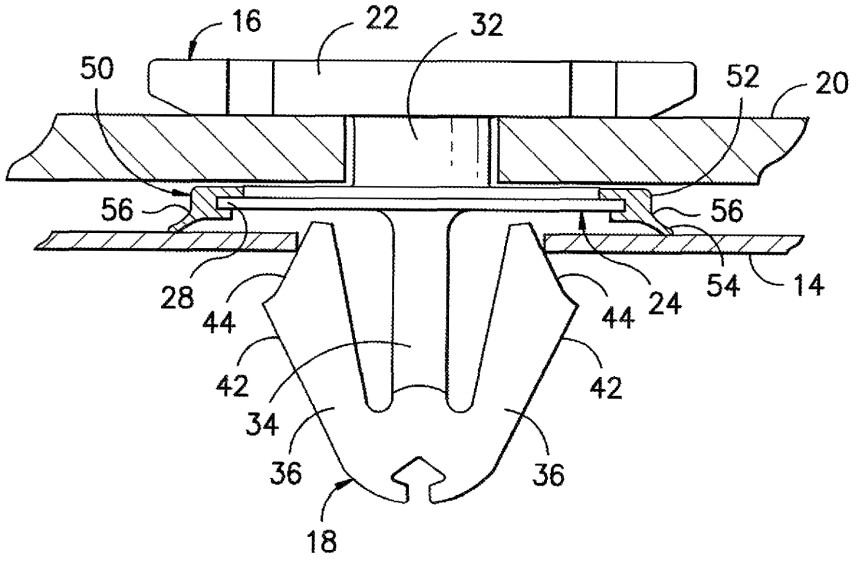

Figure 3 shows perimeter seal 50 disposed about the perimeter of lower collar 24, with sealing foot 54 in contact with support panel 14. Ex. 1001, 5:47–50, 6:24–25. In operation, neck structure 32 of retainer 10 slides into a slot in intermediate connector 20, which in turn may be attached to an overlying molding. *Id.* at 5:14–19. Clip portion 18 secures retainer 10 to panel 14 by use of wing elements 36 that flex inward during insertion of clip portion 18 through opening 38 in panel 14. *Id.* at 5:23–33. Distal face surface 44 abuts opening 38 of panel 14 after insertion of clip portion 18, urging retainer 10 downward toward panel 14. *Id.* at 5:34–44, 6:56–63. Downward movement will continue until “molding 12 comes into contact with the underlying support panel 14 to establish a zero gap condition.” *Id.* at 6:63–66. As “sealing foot 54 is pressed against the support panel 14 during normal use, the sealing foot 54 readily flexes upwardly towards a flattened condition about a living hinge 56.” *Id.* at 6:24–27.

D. Challenged Claims

Petitioner challenges claims 1–20 of the ’882 patent. Pet. 1. Claims 1, 11, and 19 are independent, and we reproduce claim 1 below.

> 1. A connection assembly configured to join a surface element to an underlying support structure while maintaining a substantially zero gap, abutting relation between the surface element and the support structure, the connection assembly comprising:
>
> a press-in retainer configured for insertion into an acceptance opening in the support structure, the retainer including a retainer head and a clip portion projecting from the retainer head,
>
> wherein the retainer head includes a first platform and a second platform spaced from the first platform, the retainer further including a seal disposed at least partially about the second platform, the seal having a durometer lower than a durometer of the second platform, and the seal including a body portion engaging the second platform and a sealing foot projecting from the body portion to a free edge such that the sealing foot is disposed outboard from the second platform, and a first surface of the sealing foot forms an obtuse angle relative to a plane of a second surface of the second platform, wherein the retainer head is configured to be slid into a channel defined by the surface element, and the clip portion is configured to be pushed into the acceptance opening in the support structure,
>
> wherein the clip portion is configured to press against an interior surface of the acceptance opening to urge the retainer downwardly into the acceptance opening,
>
> wherein the sealing foot is configured to flex about a living hinge provided between the body portion and the sealing foot from an unstressed condition to a fully flexed condition while remaining outboard from the second platform and maintain sliding contact with the support structure, wherein in the unstressed condition, the sealing

> foot forms the obtuse angle relative to the plane of the second surface of the second platform, and wherein in the fully flexed condition, the free edge of the sealing foot is moved radially outwardly until the sealing foot and the second surface of the second platform define a flat surface, and wherein the sealing foot is configured to flex from the unstressed condition toward the fully flexed condition in order to create the substantially zero gap between the surface element and the support structure in response to the clip portion pressing against the interior surface of the acceptance opening to urge the retainer downwardly into the acceptance opening.

Ex. 1001, 8:22–67.

E. Asserted Grounds and Evidence

Petitioner contends that the challenged claims are unpatentable based on the following grounds:

Claims Challenged	35 U.S.C. §[1]	References
1–20	103	Sawaya,[2] Pue,[3] Iwasaki[4]

[1] The Leahy-Smith America Invents Act ("AIA"), Pub. L. No. 112-29, 125 Stat. 284, 287–88 (2011), amended certain sections of this statute, including § 103, and the effective date of the relevant amendment is March 16, 2013. The '882 patent issued from an application filed on May 24, 2018, and claims priority to several applications, the earliest of which is a provisional application filed on December 19, 2012. Ex. 1001, codes (22), (63), (60). The filing date of the '882 patent is after the effective date of the AIA amendment to the statute, but the '882 patent claims priority to an application filed before the effective date. Petitioner asserts that the pre-AIA version of §103 applies here due the claim of priority, and Patent Owner does not dispute this assertion. Pet. 2. No issue turns on the applicable version of the statute, however, and the outcome of this Decision would be the same regardless of which version of the statute applies.
[2] Japanese Patent No. 4,252,827, issued April 8, 2009 (Ex. 1009, Ex. 1008 (certified translation)) (collectively, "Sawaya").
[3] US 2005/0189775 A1, published Sept. 1, 2005 (Ex. 1013) ("Pue").
[4] US 2011/0119875 A1, published May 26, 2011 (Ex. 1010) ("Iwasaki").

Claims Challenged	35 U.S.C. §[1]	References
1–20	103	Benedetti,[5] Pue, Iwasaki

Pet. 27–28. Petitioner relies on three Declarations of Robert Wheelock. Exs. 1005, 1014, 1016. Patent Owner relies on the Declaration of Dr. John Pratt. Ex. 2008.

ANALYSIS

A. Legal Standards

To prevail in its challenges, Petitioner must prove unpatentability by a preponderance of the evidence. 35 U.S.C. § 316(e); 37 C.F.R. § 42.1(d). "In an [*inter partes* review], the petitioner has the burden from the onset to show with particularity why the patent it challenges is unpatentable." *Harmonic Inc. v. Avid Tech., Inc.*, 815 F.3d 1356, 1363 (Fed. Cir. 2016) (citing 35 U.S.C. § 312(a)(3) (requiring *inter partes* review petitions to identify "with particularity . . . the evidence that supports the grounds for the challenge to each claim")). This burden of persuasion never shifts to Patent Owner. *See Dynamic Drinkware, LLC v. Nat'l Graphics, Inc.*, 800 F.3d 1375, 1378 (Fed. Cir. 2015) (discussing the burdens of proof in an *inter partes* review).

Petitioner relies on obviousness in its challenges to the claims that we address below. A claim is unpatentable as obvious under 35 U.S.C. § 103(a) if the differences between the claimed subject matter and the prior art are such that the subject matter, as a whole, would have been obvious at the time the invention was made to a person having ordinary skill in the art to which said subject matter pertains. *KSR Int'l Co. v. Teleflex Inc.*, 550 U.S. 398, 406 (2007). The question of obviousness is resolved on the basis of

[5] US 8,561,265 B2, filed April 12, 2011 (Ex. 1012) ("Benedetti").

underlying factual determinations, including: (1) the scope and content of the prior art; (2) any differences between the claimed subject matter and the prior art; (3) the level of skill in the art; and (4) when in evidence, so-called secondary considerations. *Graham v. John Deere Co. of Kansas City*, 383 U.S. 1, 17–18 (1966).

B. Level of Ordinary Skill in the Art

The level of skill in the art is "a prism or lens" through which we view the prior art and the claimed invention. *Okajima v. Bourdeau*, 261 F.3d 1350, 1355 (Fed. Cir. 2001). "The person of ordinary skill in the art is a hypothetical person who is presumed to know the relevant prior art" at the time of the invention. *In re GPAC, Inc.*, 57 F.3d 1573, 1579 (Fed. Cir. 1995). Factors that may be considered in determining the level of ordinary skill in the art include, but are not limited to, the types of problems encountered in the art, the sophistication of the technology, and educational level of active workers in the field. *Id.* In a given case, one or more factors may predominate. *Id.*

Petitioner contends a person of ordinary skill in the art ("POSITA") would have "at least a Bachelor's degree in Mechanical Engineering and 3 years' experience in push-in fastener engineering—specifically sealing fasteners and related injection molding manufacturing processes and materials." Pet. 13 (citing Ex. 1005 ¶ 21). Patent Owner does not refute

Petitioner's proposed level of ordinary skill in the art or propose a different level of ordinary skill in the art.[6]

We find Petitioner's proposal is consistent with the level of skill reflected in the '882 patent and the asserted references. Accordingly, we apply Petitioner's proffered level of ordinary skill in the art.

C. Claim Construction

In *inter partes* reviews, we interpret claims in the same manner used in a civil action under 35 U.S.C. § 282(b). 37 C.F.R. § 42.100(b); *Phillips v. AWH Corp.*, 415 F.3d 1303 (Fed. Cir. 2005) (en banc) (setting forth claim construction approach in district court cases). Under that standard, we generally give claim terms their ordinary and customary meaning, as would be understood by a person of ordinary skill in the art at the time of the invention, in light of the language of the claims, the specification, and the prosecution history. *See Phillips*, 415 F.3d at 1313–14. Although extrinsic evidence, when available, may also be useful when construing claim terms under this standard, extrinsic evidence is generally "less reliable" than the intrinsic record. *See id.* at 1318–19. We need only construe terms in controversy, and then only to the extent necessary to resolve the controversy. *See Nidec Motor Corp. v. Zhongshan Broad Ocean Motor Co.*, 868 F.3d 1013, 1017 (Fed. Cir. 2017) ("[W]e need only construe terms 'that are in controversy, and only to the extent necessary to resolve the controversy.'"

[6] Patent Owner's declarant Dr. Pratt takes issue with certain aspects of Petitioner's proposal, but Patent Owner does not raise any of those issues in its briefing. *See* Ex. 2008 ¶ 24; Paper 16, 8 ("Patent Owner is cautioned that any arguments not raised in the response may be deemed waived."). The outcome of this Decision would not have changed if we applied a level of ordinary of skill in the art that accounted for Dr. Pratt's criticisms of Petitioner's proposal.

(quoting *Vivid Techs., Inc. v. Am. Sci. & Eng'g, Inc.*, 200 F.3d 795, 803 (Fed. Cir. 1999))). The parties raise three claim construction issues, which we address in turn below.

1. abut/abutting

Petitioner proposes a construction for "abutting/abut," while Patent Owner argues that we need not construe the term. Pet. 15 ("[T]he word 'abut' or 'abutting' means next to or beside."); PO Resp. 4 (arguing that terms other than "living hinge" and "disposed outboard" do not require construction because the ordinary meaning is "not genuinely disputed and/or not at issue"). We agree with Patent Owner that we need not construe "abutting/abut" in order to resolve the issues in this Decision.

2. living hinge

Petitioner argues that we should construe "living hinge" to mean "an area integral to the hinged part at which the part will readily bend or flex." Pet. 13–14. Patent Owner agrees with Petitioner's construction of "living hinge" but argues that Petitioner does not apply the construction correctly to the prior art. PO Resp. 13–14. We adopt the parties' agreed construction of "living hinge" and we will address the parties' arguments as to whether the prior art discloses the limitation in the context of our analysis of those arguments below. Accordingly, we construe "living hinge" to mean "an area integral to the hinged part at which the part will readily bend or flex."

3. "sealing foot . . . disposed outboard from the second platform"

The parties dispute the scope of the phrase "sealing foot . . . disposed outboard from the second platform" that appears in all three independent claims of the '882 patent. Ex. 1001, 8:38–39, 9:52–53, 10:59–60. Petitioner argues that we should give the limitation its ordinary meaning. Pet. 13.

Patent Owner also argues in favor of giving the limitation its ordinary meaning, which Patent Owner interprets as "the skirt portion of the seal is located to the side of the second platform." PO Resp. 4. Although both parties argue in favor of the ordinary meaning, they interpret the ordinary meaning differently, with Patent Owner effectively seeking a construction that requires a sealing foot located entirely beyond the second platform, or as the specification describes it, "disposed entirely outboard" the second platform, while Petitioner disagrees with such a narrow construction. *See* Ex. 1001, 6:16–20; PO Resp. 4–13 (arguing against construction where only a part of the sealing foot must be disposed outboard); Pet. Reply 2–5 (arguing against Patent Owner's construction where all of the sealing foot must be entirely outboard from the second platform).

Patent Owner contends that the claim language supports its interpretation by referring to "<u>the</u> sealing foot" disposed outboard rather than a mere portion of the sealing foot. PO Resp. 9.[7] Patent Owner relies on a hypothetical where a person would not be "considered 'outboard' of a boat simply because their arm is sticking out the side of the boat, i.e., while the person's <u>arm</u> may be outboard, <u>the person</u> is still inside the boat." *Id.* (citing Ex. 2008 ¶¶ 57–70; Ex. 2011, 71–72). Patent Owner also argues that the specification supports its position by describing sealing foot 54 "disposed

[7] Patent Owner also argues for a construction of "sealing foot" that refers to a sealing foot projecting from a seal body portion to a free edge, with a living hinge between the sealing foot and the body portion. *See id.* at 5–8. Petitioner does not dispute this position and we do not take issue with it, but it does not address the core claim construction dispute between the parties. *See id.* at 9 ("The real dispute over this claim term, therefore, is not over the meaning of 'sealing foot.' Rather, the dispute turns on what it means to be "disposed outboard.").

entirely outboard" from the collar of the second platform and stressing the importance of avoiding a "stack up" condition that can result by placing "any part" of the sealing foot under the second platform. *Id.* at 10–11 (citing Ex. 1001, 2:51–55, 6:17–23, 7:53–65; Ex. 2008 ¶¶ 63–65, 69–70; Ex. 2011, 48–51); *see also* PO Sur-reply 12–13. As to the prosecution history, Patent Owner acknowledges that claims in the parent application included the word "entirely" within the phrase "disposed entirely outboard," but argues that the applicant never argued that "disposed outboard" or "disposed entirely outboard" had different meanings and the prosecution history does not "effect[] any clear disclaimer in this regard." PO Resp. 12.

Petitioner argues that we should not construe "disposed outboard" to mean located entirely beyond, such that "*all* of the foot [must] be *entirely* outboard the lower platform." Pet. Reply 2–5. Petitioner contends that Patent Owner wrongly presumes that "the ordinary meaning of 'outboard' requires a first structure to be wholly outside the second." *Id.* at 2. According to Petitioner, the applicant knew how to emphasize when one structure was entirely outboard another by using the word "entirely" both in the specification and when prosecuting claims in the parent application. *Id.* at 2–3 (citing Ex. 1001, code (63), 6:16–22; Ex. 1003-1, 13–17, 50–54; Ex. 1004, 27–30). As to Patent Owner's "boat-passenger analogy," Petitioner argues that it supports Petitioner's position because a person extending an arm over the side of a boat has an arm disposed outboard the boat "even though portions adjacent the person's shoulder are within the boat's perimeter." *Id.* at 2. As to the claim language's reference to "the sealing foot," Petitioner argues that the use of "the" "merely denotes an antecedent relationship" and "does not connote a particular *quantity* of

sealing foot" or "alter the plain and ordinary meaning of 'outboard' to mean *entirely* outboard." *Id.* at 3. As to the specification, Petitioner argues that a single embodiment showing and describing a sealing foot "entirely" outboard a second platform does not limit the claims and that avoiding the stack up problem may be accomplished by providing a free space below the second platform even when portions of the sealing foot remain beneath that platform. *Id.* at 3–5 (citing Ex. 1001, 3:49–51, 6:15–23, 7:47–52; Ex. 1017, 105:2–8). Petitioner further contends that a portion of the prosecution history supports its argument because the Examiner found the "disposed outboard" limitation met by prior art that showed only a portion of the sealing foot extending outboard of the second platform. *Id.* at 4–5 (citing Ex. 1003, 227; Ex. 2008 ¶¶ 65, 68).

Based on our review of the arguments and evidence, we do not agree with Patent Owner that "disposed outboard" means "located entirely beyond" or "disposed entirely outboard" in the challenged claims.[8] First, as to the claim language, the claims do not include the word "entirely" or any other language that suggests they are limited to structures that lie entirely outboard of the second platform. Patent Owner stresses that "<u>the</u> sealing foot" must be disposed outboard of the second platform according to the

[8] As noted above, Patent Owner argues in favor of the plain and ordinary meaning for the limitation that requires a sealing foot "to the side" of the second platform, but Patent Owner views its construction as not broad enough to cover a sealing foot located only partly beyond, or outboard, of the second platform, and effectively seeks a construction requiring a sealing foot located entirely beyond or disposed entirely outboard the second platform. *See* PO Resp. 4 (arguing in favor of plain and ordinary meaning that requires a "skirt portion of the seal is located to the side of the second platform"), 5–6 (disagreeing with Petitioner's argument that the limitation covers a sealing foot "'partially' disposed outboard").

claim language, which suggests that the entire sealing foot must be disposed outboard, but we agree with Petitioner that use of the term "the" before sealing foot does not specify how much of the sealing foot must be disposed outboard the second platform. *See* PO Resp. 9; Pet. Reply 3. In addition, although the parties' dueling boat hypotheticals as to the ordinary meaning of "disposed outboard" are not determinative, we find Petitioner's more persuasive—i.e., that a passenger's arm hanging out of a boat may be described as an arm "disposed outboard" of the boat even if the upper parts of the arm remain inside the boat. *See* Pet. Reply 2. Following that same logic, the ordinary meaning of a sealing foot disposed outboard of a second platform would encompass a sealing foot that overlaps somewhat with the second platform, as long as a portion of the sealing foot remains outboard of the platform. Accordingly, the claim language standing alone supports Petitioner's position and does not mandate the construction Patent Owner proposes.

As to the specification, we generally agree with Patent Owner that it describes and depicts a sealing foot located entirely beyond or disposed entirely outboard of the second platform and describes one of the advantages of such a design as avoiding a "stack-up" problem. *See* PO Resp. 10–11 (citing Ex. 1001, 2:51–55, 6:17–23, 7:53–65; Ex. 2008 ¶¶ 63–65, 69–70; Ex. 2011, 48–51); PO Sur-reply 12–13. But merely describing a preferred embodiment as having a sealing foot "disposed entirely outboard" the second platform does not suggest a clear disavowal of claim scope sufficient to warrant reading "entirely" into the claim. *See Info-Hold, Inc. v. Applied Media Tech.*, 783 F. 3d 1262, 1266-68 (Fed. Cir. 2015). In addition, while the specification notes the advantage of lessening the chance of stack-up

problems with a sealing foot disposed entirely outboard of the second platform, the claimed invention need not achieve every objective or advantage listed in the specification. *See Phillips*, 415 F.3d at 1326–27. Moreover, the specification does not address the situation where only a portion of a sealing foot extends under the second platform or state that such an arrangement would cause unworkable stack-up problems by distinguishing the claimed invention over such an approach. *See also* Ex. 1003, 134, 136 (drawings filed in parent application describing prior art stacking problem as associated with foam compression seals). The specification also uses the phrase "entirely outboard" to describe this configuration, which suggests that "outboard" alone is broader than Patent Owner suggests. *See* Ex. 1001, 6:16–20. At best, we view the specification as neutral toward Patent Owner's position and does not show a clear disavowal of claim scope such that the specification mandates reading "disposed outboard" as "disposed entirely outboard" in the challenged claims.

As to the prosecution history, we agree with Petitioner that it supports its position rather than Patent Owner's narrower construction. As Petitioner notes, during prosecution of the parent application,[9] the applicant sought and obtained claims that included the "disposed outboard" limitation as well as the "disposed entirely outboard" limitation. *See* Pet. Reply 2–3; Ex. 1003, 16, 18, 20, 49, 51, 53. Patent Owner removed "entirely" from all of the claims prior to the issuance of the '882 patent. Ex. 1004, 27–30. While the existence of earlier claims containing the word "entirely" may not mandate

[9] The '882 patent claims priority to an application that led to the issuance of US 9,982,692. Ex. 1001, code (63).

the conclusion we reach here, the applicant's deliberate use of the word "entirely" in some but not all of the claims during prosecution shows that the applicant knew how to deliberately narrow the claims to include a "disposed entirely outboard" limitation when it sought to do so, and leave the word "entirely" out of the claims when it sought broader scope. *See Unwired Planet, LLC v. Apple, Inc.*, 829 F.3d 1353, 1359 (Fed. Cir. 2016) ("If the patentee intended to restrict the claims-at issue . . . it could have included that same limitation[.]"). Further, if Patent Owner's position had merit, and "disposed outboard" already meant "disposed entirely outboard," there would have been no need to use the word "entirely" at all in the claims.[10] The prosecution history supports Petitioner's position that "disposed outwardly" does not mean "disposed entirely outwardly."

Based on our review of the claim language, specification, and prosecution history, as well as the parties' arguments and evidence, we conclude that "sealing foot . . . disposed outboard from the second platform" does not require a sealing foot located entirely beyond or disposed entirely outboard from the second platform, as Patent Owner argues. Consistent with

---

[10] Although not necessary to our conclusion on claim construction, we also agree with Petitioner that the Examiner took a broad view of "disposed outboard" when applying the prior art to that limitation. *See* Pet. Reply 4–5 (citing Ex. 1003, 227; Ex. 2008 ¶¶ 65, 68). The Examiner found that a prior art reference discloses the limitation even though the reference's sealing foot extended beneath the second platform (the "lower collar" in that reference) and not entirely outboard the second platform. *See* Ex. 1003, 225–227. Patent Owner's declarant attempts to read this same rejection as supporting Patent Owner's position, but in doing so relies on a "second platform" in the prior art that the Examiner did not rely on in the rejection. *See* Ex. 2008 ¶ 65 (indicating that "base 208" corresponds to the second platform); Ex. 1003, 227 (indicating that a wider "lower collar" about the sealing foot corresponds to the second platform).

Petitioner's arguments, we give the terms their plain and ordinary meaning, which encompasses a retainer having a portion of a sealing foot located beyond the second platform.

D. Obviousness Based on Sawaya, Pue, and Iwasaki

Petitioner challenges claims 1–20 under 35 U.S.C. § 103, contending that the claimed subject matter would have been obvious over "Sawaya [a]lone and/or in light of Pue, or in further view of Iwasaki." Pet. 28–61.[11] Patent Owner argues that Petitioner fails to show that the asserted references render the claimed subject matter obvious. PO Resp. 15–36. We first provide an overview of relevant aspects of the prior art, and then turn to the parties' arguments.

1. Sawaya

Sawaya relates "to a resin clip used for securing a member to be attached such as an automobile interior component or the like to a panel." Ex. 1008 ¶ 1. Sawaya's resin clip includes a "sealing pad" to prevent the flow of moisture and air and "to seal a gap in the hole of the panel and to isolate the inside and outside of the panel." *Id.* at ¶ 4.

Sawaya's Figure 2 is reproduced below.

[11] We focus on the challenge based on Sawaya, Pue, and Iwasaki, and need not reach challenges based on Sawaya alone, or a combination of Sawaya and Pue or Sawaya and Iwasaki.

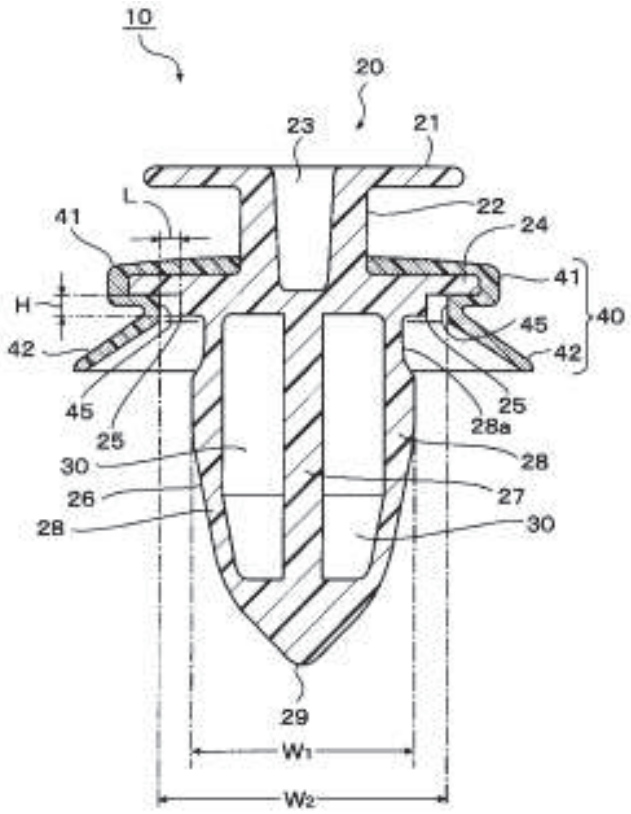

Figure 2 shows a cross-sectional view of Sawaya's resin clip 10, which includes head part 21, leg part 26, and flange part 24. Ex. 1008 ¶ 55. Figure 2 also depicts sealing pad 40, which includes attaching part 41, skirt part 42, and folded back part 45. *Id.* Attaching part 41 of sealing pad 40 covers an upper surface and a portion of a lower surface of flange part 24, and skirt part 42 extends obliquely and outward from the inner circumference of attaching part 41. *Id.* at ¶ 28.

Sawaya's Figure 6 is reproduced below.

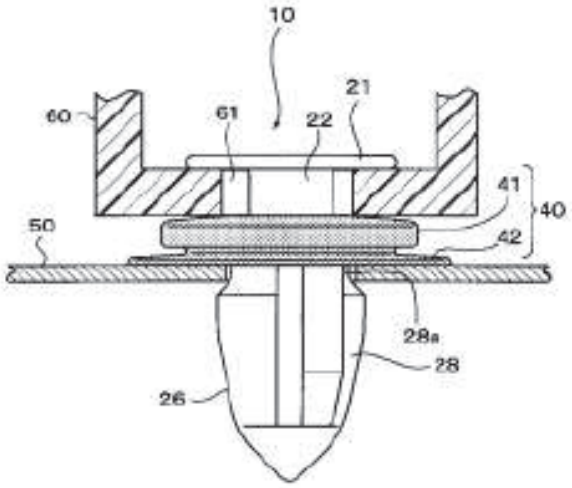

Figure 6 shows member to be attached 60 and panel 50 connected to one another using resin clip 10. Ex. 1008 ¶ 55. Figure 6 also depicts head part 21 of resin clip 10 engaging hole 61 of member 60 and leg part 26 of resin clip 10 inserted through a locking hole in panel 50. *Id.* at ¶¶ 51, 52, 55. As member 60 approaches panel 50, the lower surface of skirt part 42 of sealing pad 40 contacts the top of panel 50 and extends outwardly such that it "is closely sealed to the surface" of panel 50. *Id.* at ¶¶ 52, 54.

2. Pue

Pue relates "to trim panels for vehicles and, more particularly, to gaps between trim panels and a vehicle body." Ex. 1013 ¶ 1. Pue describes numerous disadvantages of gaps between trim panels and the vehicle body. *Id.* at ¶ 13. For example, Pue states that gaps detract from the visual appearance of the vehicle, allow ingress of air and moisture into the passenger compartment, and exacerbate vibrations that generate noises such as squeaks and rattles. *Id.*

3. Iwasaki

Iwasaki relates "to a clip-mounting seat which is used to mount a clip on an inner surface side of a vehicle interior component," such that the clip fixes the vehicle body panel to the vehicle interior component. Ex. 1010 ¶ 1.

Iwasaki's Figure 2 is reproduced below.

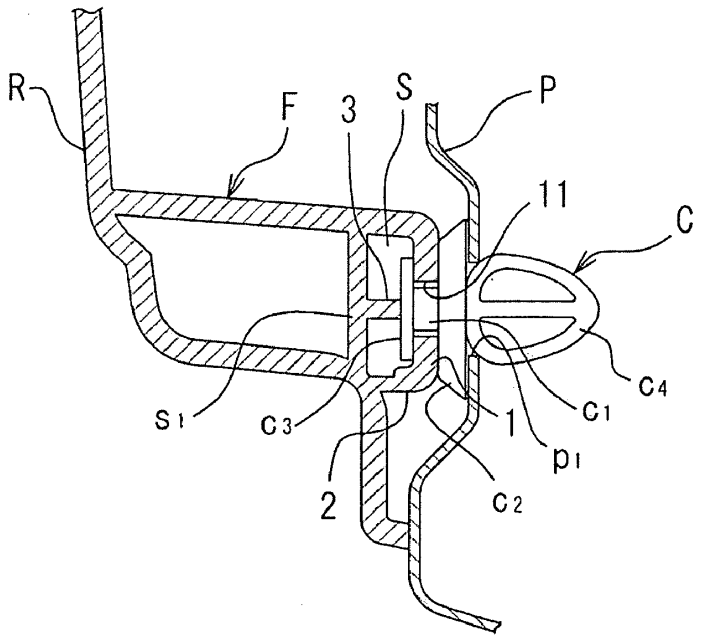

Figure 2 shows vehicle internal component R, such as a door lining, clip-mounting seat F, door panel P, and clip C. Ex. 1010 ¶¶ 28–29. Figure 2 also depicts a flared flange portion c2 of clip C in the space between panel P and mounting seat F. *Id.* at ¶ 30. The bottom of Figure 2 shows internal component R abutting door panel P.

4. Discussion

Petitioner asserts that the combination of Sawaya, Pue, and Iwasaki discloses all of the limitations of the challenged claims. Pet. 28–61. Petitioner provides analysis of each limitation of the claims, with citations to the references that correspond to each of the claim limitations. *Id.*

Petitioner also cites to the relevant supporting declarant testimony. *Id.* (citing various portions of Ex. 1005).

Patent Owner argues that Petitioner fails to (1) provide a sufficient reason to modify Sawaya (applicable to all claims); (2) establish that the combination provides a "zero gap" condition in response to a downward urging of the retainer (applicable to claims 1–10 and 16); and (3) establish that the combination discloses a sealing foot disposed outboard from the second platform (applicable to all claims). PO Resp. 15–36. We address each of Patent Owner's arguments in turn below. Because all of Patent Owner's arguments apply to claim 1, and Patent Owner addresses the claims subject to each argument as a group, we will focus on the limitations in claim 1 in our discussion, with an understanding that the same analysis applies to the other claims in that group. *See id.*

a. Motivation to Modify Sawaya

Petitioner contends that "Sawaya explicitly discloses all but one element of independent Claim 1 . . . the maintenance of a substantially zero gap" between the surface element and support structure and that maintenance of the zero gap would have been obvious to one of ordinary skill in the art based on Sawaya alone and further in view of Pue and/or Iwasaki. *Id.* at 28. Petitioner also articulates reasons to modify aspects of Sawaya based on Pue and Iwasaki, with an alleged reasonable expectation of success. *Id.* at 29–33. More specifically, Petitioner argues that a POSITA "would have known to avoid intrusion of unwanted dirt and water between trim and vehicle body by maintaining a substantially zero gap abutting relation between them." Pet. 29 (citing Ex. 1005 ¶ 64). Petitioner also contends that a POSITA would have known that maintaining a zero gap would avoid unwanted rattling noises and improve the aesthetic appearance

of the vehicle. *Id.* Petitioner relies on Pue's explicit acknowledgement of these concerns, and argues that "[s]uch knowledge would have motivated [POSITAs] to dimension Sawaya's clip, surface element and support structure, to maintain such a substantially zero gap abutting relation." *Id.* at 30–31 (citing Ex. 1005 ¶ 66; Ex. 1013 ¶ 3). Petitioner also relies on Iwasaki's depiction of a substantially zero gap between its surface element (R) and support structure (P), as shown in Iwasaki's Figure 2 in our overview of Iwasaki above. *Id.* at 31 (citing Ex. 1010, Fig. 2). Petitioner argues that these disclosures would have motivated a POSITA to dimension Sawaya's clip, surface element, and support structure to maintain a substantially zero gap. *Id.* at 32 (citing Ex. 1005 ¶¶ 69–71). As part of its expectation of success argument, Petitioner argues that it would have been a routine matter to adjust the height of the head part of Sawaya's clip above its support panel 50, as well as its connector, "to ensure contact between [Sawaya's] surface element and support structure." *Id.* at 32 (citing Ex. 1005 ¶ 70).

Patent Owner argues that the claim requires a specific solution to the zero gap condition and that Petitioner fails to provide a reason or motivation to modify Sawaya to implement that specific solution. PO Resp. 15–16. For example, Patent Owner asserts that claims 1–10, 16, and 19–20 all require maintaining a substantially zero gap in a specific way, either by urging the retainer downwardly (claims 1–10 and 16) or by using a sealing foot configured to flex about a living hinge toward a flattened condition. *Id.* at 16–17. Patent Owner contends that none of the prior art disclose these claimed solutions to the zero gap problem and Petitioner's proposed method of adjusting heights and dimensions of various components fails to provide

the claimed solution. *Id.* at 18–19, 21 (citing Ex. 1005 ¶ 70; Ex. 2011, 90–91, 93–94). As to Iwasaki, Patent Owner states that although its Figure 2 shows no gap, a gap may still exist, and given the hard plastic skirt Iwasaki uses it could not achieve a zero gap condition. *Id.* at 19–20 (citing Ex. 2008 ¶¶ 44–51; Ex. 2011, 28–31, 79, 83–84, 87). Patent Owner also argues that Petitioner fails to provide an adequate reason to (1) "configure Sawaya to provide the right amount of pulldown force," (2) configure Sawaya's seal to avoid stack-up, and (3) dimension the fastener components to maintain the zero-gap condition. *Id.* at 21. According to Patent Owner, "simply knowing the prior art problem would not have suggested the '882 patent's very specific claimed solution" and that other solutions to the gap problem exist in the field. *Id.* at 21–22 (citing Ex. 2008 ¶¶ 76–80; Ex. 2011, 55, 60). As to claims 11–15, 17, and 18, Patent Owner acknowledges that the claims lack the "zero gap" limitation, but argues that Petitioner nevertheless fails to articulate why the claims would have been obvious. *Id.* at 22–23.

Petitioner replies that Patent Owner and its expert concede that a POSITA would seek to create a zero gap and Petitioner's prior art recognizes the importance of ensuring zero gaps. Pet. Reply 6 (citing Ex. 1010, Fig. 2; Ex. 1013, ¶ 3, Fig. 1; Ex. 2008 ¶ 28). Petitioner also asserts that Patent Owner's argument that Iwasaki does not disclose a zero gap lacks merit because it shows no gap. *Id.* at 6–7. Petitioner argues that a POSITA "would have been motivated to employ Sawaya's fastener in a zero gap assembly" because Sawaya discloses a "push-in type W-base retainer" that the '882 patent acknowledges that such W-base retainers work in conjunction with other components to establish and maintain a zero gap condition. *Id.* at 7 (citing Ex. 1001, 1:57–61).

In response, Patent Owner argues that Petitioner's reliance on Sawaya's W-type fastener and the '882 patent's description of them amounts to an improper new argument, and that the '882 patent merely acknowledges the "motivation to solve a generalized gap problem, not to implement the specific claimed solution of the '882 patent." PO Sur-reply 4 (citing Pet. Reply 7; PO Resp. 15–16, 21–22, 38–40). Patent Owner also argues that "even if it would have been obvious to change the dimensions of the *panel and trim*, that does not mean that the *fastener* was 'configured' to provide the zero gap condition." *Id.* at 5.[12]

Based on our review of the arguments and evidence, Petitioner establishes sufficiently that a POSITA would have been motivated to dimension the clip Sawaya discloses, along with the surface element and support structure, to create and maintain a substantially zero gap condition between the surface element and support structure, for the reasons provided by Petitioner. *See* Pet. 29–33; Pet. Reply 6–7; Ex. 1005 ¶¶ 64–71. Petitioner persuasively argues, with credible declarant support, that a POSITA would have known that creating and maintaining a zero gap would provide several benefits, including (1) avoiding intrusion of unwanted dirt and water between trim and vehicle body; (2) avoiding unwanted rattling noises; and (3) improving the aesthetic appearance of the vehicle. Pet. 29

[12] Patent Owner makes this argument as part of a response to Petitioner's argument that the dimensions of claimed and unclaimed components primarily determine whether a zero gap condition exists. *See* PO Sur-reply 4–6; Pet. Reply 7–12. We view Petitioner's argument as going to whether the combination discloses the zero gap limitation, not the motivation to modify Sawaya argument that we address here. *See* Pet. Reply 8 (addressing Patent Owner's inherency argument raised in relation to whether Sawaya discloses a zero gap condition).

(citing Ex. 1005 ¶ 64). Pue itself expressly teaches the desirability of maintaining a zero gap to achieve these benefits. Ex. 1013 ¶ 3; Ex. 1005 ¶ 66. Petitioner also correctly notes that the '882 patent itself expressly acknowledges that the retainers used in this field already seek to achieve "the goal of establishing and maintaining a 'zero gap' condition between the sheet metal panel and other support element and the molding or other surface structure." Pet. Reply 7 (quoting Ex. 1001, 1:57–61).[13] All of this evidence more than adequately supports a finding that one of ordinary skill in the art would have been motivated to modify Sawaya to create and maintain a zero gap condition.

We also find that Petitioner establishes a reasonable expectation of success that the modification of Sawaya would result in the creation and maintenance of a substantially zero gap. *See* Pet. 32–33; Ex. 1005 ¶¶ 70–71. Petitioner's declarant credibly asserts that it would have been a routine matter to adjust the height of the head part of Sawaya's clip above the panel and dimension the connector to ensure contact between the surface element and support structure. Ex. 1005 ¶ 70.

Patent Owner's arguments and evidence do not undermine Petitioner's showing on this issue. Patent Owner and its declarant largely concedes the central thrust of Petitioner's motivation argument—that those with ordinary skill in the art knew of the desire to create and maintain a zero gap

[13] Patent Owner argues that this argument by Petitioner and several others are "new" and untimely. *See, e.g.*, PO Sur-reply 2–4, 6, 8, 10, 16–17. We do not view Petitioner's arguments as so new that we should not consider them, and instead view the arguments as either expanding on arguments made in the Petition or directly responsive to arguments Patent Owner made in its Patent Owner Response.

condition. *See, e.g.*, Ex. 2008 ¶ 28 (referring to "unacceptable gap condition" that may occur); PO Sur-reply (acknowledging that '882 patent provides "a motivation to solve a generalized gap problem"). Rather than attack Petitioner's stated reasons for the modification of Sawaya directly, Patent Owner argues that Petitioner's generalized motivation arguments miss the point and fail to show a motivation to implement the specific *claimed* solution. *See, e.g.*, PO Resp. 15–16; PO Sur-reply 4. While we agree with Patent Owner to the extent that it argues that the resulting combination or modification must meet all of the limitations of the claims, we disagree with Patent Owner's implicit argument that the *motivation itself* must track the language of the claims. The motivation "may be found explicitly or implicitly in market forces; design incentives; the 'interrelated teachings of multiple patents'; 'any need or problem known in the field of endeavor at the time of invention and addressed by the patent'; and the background knowledge, creativity, and common sense of the person of ordinary skill." *Zup v. Nash Mfg.*, 896 F.3d 1365, 1371 (Fed. Cir. 2018) (quoting *Plantronics, Inc. v. Aliph, Inc.*, 724 F.3d 1343, 1354 (Fed. Cir. 2013)). Patent Owner provides inadequate support for the argument that motivations derived from such diverse sources, including implicit market forces, must track the claim language. Patent Owner's arguments are more appropriately viewed as supporting its separate argument going to whether Petitioner's proposed modifications to Sawaya result in a structure that meets the language of the claims, issues we address in the next section. *See, e.g.*, PO Resp. 23–31 (arguing that proposed modification fails to meet the claimed "zero gap" condition).

To the extent that Patent Owner argues that Petitioner merely identifies a generalized motivation or goal to create a zero gap condition without any teaching in the art to achieve that goal, we also disagree. *See* PO Resp. 16 (arguing that a generalized motivation to solve a problem "is legally insufficient"). Petitioner persuasively argues that Iwasaki's Figure 2 discloses a "substantially zero gap" relationship that meets the requirements of that limitation in the claims. Pet. 31 (citing Ex. 1005 ¶ 68; Ex. 1010, Fig. 2). Patent Owner contends that an undisclosed gap may exist between Iwasaki's surface element and support structure, but we decline to read in such a disclosure when Iwasaki's figure shows no gap and supports Petitioner's position that a substantially zero gap exists. *See* Ex. 1010, Fig. 2; Pet. 31; Ex. 1005 ¶ 68; PO Resp. 19 (Patent Owner acknowledging that Iwasaki's Figure 2 shows no gap); *see also* Ex. 1001, 1:57–2:8 (describing prior art retainers as part of an assembly that sought to create and maintain zero gap condition). This evidence refutes Patent Owner's argument that Petitioner merely identifies a general, unfulfilled goal in the art to achieve a zero gap condition. The goal of achieving a zero gap condition was not only well known in the industry but actually achieved, as shown by Iwasaki.

Based on the foregoing, Petitioner establishes adequately that one of ordinary skill in the art would have been motivated to modify Sawaya to implement a zero gap condition.[14]

---

[14] Patent Owner groups claims 11–15, 17, and 18 with this argument, but acknowledges that none of these claims require a zero gap condition. *See* PO Resp. 22, 40. We therefore do not treat this argument as if it applies to claims 11–15, 17, and 18, even though Petitioner grouped these claims with other claims in its obviousness analysis. *See* Pet. 28–58. Patent Owner

b. "substantially zero gap . . in response to the clip portion pressing against the interior surface of the acceptance opening to urge the retainer downwardly"

1) The Parties' Positions

Claim 1 requires a sealing foot "configured to flex . . . in order to create the *substantially zero gap* between the surface element and the support *structure in response to the clip portion pressing against the interior surface of the acceptance opening to urge the retainer downwardly* into the acceptance opening." Ex. 1001, 8:60–67 (emphases added).[15] Dependent claim 16 requires "a pair of flexible wings . . . [including] an angled biasing surface . . . the angled biasing surface being *configured to press against an interior surface of the acceptance opening to urge the retainer downwardly into the acceptance opening*" such that the seal flexes "toward the substantially flat condition until the surface element and the support structure define the *substantially zero gap*." *Id.* at 10:19–30 (emphases added).

---

suggests, in a single sentence, that Petitioner's obviousness argument as to claims 11–15, 17, and 18 lacks an adequate basis because Petitioner did not need to rely on the obviousness analysis that applies to claim 1 due to the absence of the "zero gap" limitation in claims 11–15, 17, and 18. PO Resp. 23 (citing cases). We decline to find that Petitioner fails to meet its burden as to these claims based solely on this undeveloped argument.

[15] Claim 1 includes two limitations that bear on Patent Owner's arguments. First, claim 1 requires a "clip portion . . . configured to press against an interior surface of the acceptance opening to urge the retainer downwardly into the acceptance opening." Ex. 1001, 8:46–48. Second, claim 1 requires a "sealing foot . . . configured to flex from the unstressed condition toward the fully flexed condition in order to create the substantially zero gap between the surface element and the support structure in response to the clip portion pressing against the interior surface of the acceptance opening to urge the retainer downwardly into the acceptance opening." *Id.* at 8:60–67.

Petitioner argues that Sawaya discloses a clip portion "configured to press against an interior surface of the acceptance opening to urge the retainer downwardly into the acceptance opening." Pet. 38 (citing Ex. 1005 ¶ 81) (addressing limitation requiring "the clip portion is configured to press against an interior surface of the acceptance opening to urge the retainer downwardly into the acceptance opening"). According to Petitioner, when inserting Sawaya's leg portion 26 of resin clip 10 into a hole in panel 50, the leg is "elastically locked to a hole edge of a rear surface of the panel, such that the member to be attached and the panel are secured." *Id.* (citing Ex. 1005 ¶ 81; Ex. 1008 ¶ 3). Petitioner further alleges that Sawaya's "[e]lastic locking part 28 locks against the interior surface of the acceptance opening at reduced diameter part 28a." *Id.* (citing Ex. 1005 ¶ 81; Ex. 1008 ¶¶ 53, 54). Petitioner argues that "[l]ocking part 28 urges Sawaya's retainer downward such that the flange part 24 is 'pressed against' the surface of the panel." *Id.* at 38–39 (citing Ex. 1005 ¶ 81; Ex. 1008 ¶¶ 3, 54); *see also id.* at 43 (citing Ex. 1005 ¶ 87; Ex. 1008 ¶¶ 3, 53, 54). According to Petitioner, when these aspects of Sawaya are combined with the flexing seal shown in Sawaya's Figure 6, Sawaya "teaches that the sealing foot is configured to create a substantially zero gap between the surface element and the support structure in response to the clip portion pressing against the interior surface of the acceptance opening to urge the retainer downwardly into the acceptance opening." *Id.* at 43 (citing Ex. 1005 ¶ 87). Petitioner also references its arguments with respect to dependent claim 8 in the context of claim 1, with claim 8's relevant limitations largely mirroring those of dependent claim 16. *See* Pet. 39, 43, 49–52, 56–57 (incorporating arguments as to claims 1 and 8 into analysis of claim 16). As to claim 16's

limitation requiring an "angled biasing surface configured to press against the interior surface of the acceptance opening to urge the retainer downwardly," Petitioner argues that Sawaya's Figure 6 shows an inwardly angled biasing surface configured to press against the interior surface of the acceptance opening and secures member 60 to penal 50 by exerting downward force on the retainer. Pet. 51–52 (citing Ex. 1005 ¶ 104; Ex. 1008 ¶¶ 3, 53, 54, Fig. 6).

Patent Owner argues that Petitioner fails to show that its proposed modification "would have actually worked to provide the zero-gap condition" required by these claim limitations. PO Resp. 23–24. Patent Owner argues that the claims require (1) a clip portion that exerts a downward force strong enough to achieve the zero-gap condition "in response" to that force; and (2) "the clip portion must do so by pressing against an "'interior surface of the acceptance opening' in the body panel." *Id.* at 24. As to the exerting a downward force aspect of the limitation, Patent Owner argues that because "Petitioner cites no evidence of Sawaya expressly saying its clip exerts any 'downwardly' force," Petitioner "must show that Sawaya inherently discloses this property." *Id.* at 24–26 (citing Ex. 1005 ¶ 81; Ex. 1008 ¶¶ 3, 53, 54). Patent Owner asserts that its declarant Dr. Pratt provides a more compelling explanation of Sawaya, and argues that "Sawaya's clip wings do not provide any dynamic forces" and merely "contract to fit into the opening of the panel and then expand on the other side of the opening to 'lock' the fastener in place," much like a drywall anchor. *Id.* at 26–28 (citing Ex. 1008, Fig. 2; Ex. 2008 ¶¶ 82–97). According to Patent Owner, "Sawaya's skirt 24 is simply squeezed between the two static surfaces that are locked in place, i.e., the fastener platform and

the panel," which cannot move and "do not exert any 'downward' or upward pull." *Id.* at 28 (citing Ex. 2008 ¶¶ 85–93). Patent Owner argues that this analysis defeats any inherency argument, and even if Sawaya discloses some small amount of force, Petitioner fails to show that Sawaya's clip exerts enough force to create the zero gap condition. *Id.* at 29 (citing Ex. 2008 ¶ 96; Ex. 2011, 38–39).

As to the pressing against the interior surface of the opening aspect of the limitation, Patent Owner argues that Sawaya states that its wings lock to an edge of a rear surface of the panel rather than pressing against the interior surface of the hole. *Id.* at 29–30 (citing Ex. 1008 ¶ 3; Ex. 2008 ¶ 94). According to Patent Owner, in Sawaya the clip wings are pushed all the way through the opening and lock on the other side, unlike the claimed configuration shown in the '882 patent, which shows the wings remain partially inserted in the opening and exert a force on the interior surface of the opening. *Id.* at 30–31 (citing Ex. 1008 ¶¶ 3, 53; Ex. 2008 ¶¶ 85–95).

Petitioner replies that Patent Owner's insistence that Petitioner must rely on inherency misses the mark because the claims merely require a structure "configured to" create a substantially zero gap under certain conditions and Petitioner shows that these limitations are met without relying on inherency. Pet. Reply 7–8. According to Petitioner, "'[c]onfigured to' means 'made to,' 'designed to,' or 'adapted to,' or, more broadly, 'capable of' or 'suitable for.'" *Id.* at 8 (quoting *Aspex Eyewear, Inc. v. Marchon Eyewear, Inc.*, 672 F.3d 1335, 1349 (Fed. Cir. 2012)).[16]

[16] At the oral hearing, counsel for Petitioner stated that whether "configured to" means "capable of" or "designed to," Sawaya discloses the limitation because it is designed to have inwardly angled surfaces pressing against the

Petitioner also argues that the ’882 patent explains that the “[u]ltimate responsibility for zero gaps falls upon unrecited dimensions of unclaimed automotive trim molding (12) and supporting sheet metal panel (14)” and that the downward forces created by the angled biasing surfaces “have a much smaller impact on the creation of the zero gap condition than the critically important dimensions of trim and frame.” *Id.* at 8–11 (citing Ex. 1001, 5:33–43, 6:43–7:14, Fig. 5; Ex. 1016, ¶¶ 17, 20–21; Ex. 1017, 124:9–125:11, 154:23–155:15). Petitioner contends that Sawaya’s wings have inwardly angled ends that are radially compressed when positioned within an acceptance opening, with the outward spring force pressing against the opening’s edge, urging the clip downwardly due to the inwardly angled surfaces. *Id.* at 12 (citing Ex. 1016 ¶¶ 24–29). Petitioner argues that the lack of explicit text describing the “urging downwardly” in Sawaya does not undermine Petitioner’s position that a POSITA “would appreciate Sawaya’s configuration urges the fastener downwardly.” *Id.* Petitioner asserts that the Examiner took a similar approach to interpreting the prior art during prosecution by finding that angled surfaces abutting the inner edge of an opening in a prior art reference satisfies the limitation, without any argument against the finding from the applicant. *See id.* at 13–14 (citing Ex. 1003, 230–231; Ex. 1004, 151; Ex. 2012, Fig. 4).

Petitioner further contends, with reference to annotated figures, that Sawaya’s angled biasing surfaces press against the opening’s interior edge to urge the clip downward. Pet. Reply 14–16 (citing Ex. 1005 ¶ 103; Ex. 1009, Fig. 6; Ex. 1008 ¶ 26; Ex. 1016 ¶ 24). Petitioner also argues that similarities

---

interior of an opening in order to force the structure downward. Tr. 27:5–24. We interpret “configured to” as “designed to” for purposes of this Decision.

between Sawaya's clip and that in a prior art patent that the '882 patent incorporates by reference support Petitioner's position because the prior art describes its elastic wings as tending to draw the clip into the opening. *Id.* at 16–17 (citing Ex. 1001, 2:13–19; Ex. 1006, 3:29–33, Fig. 6). Further, according to Petitioner, even assuming that "Sawaya's clip as shown was not presently pressing outward to urge retainer downwardly," the "clip would still be configured to do so" because any vibrations or other forces pulling upward on the clip would further engage the elastic inwardly angled surfaces in such a way that the clip would be urged downward to maintain the substantially zero gap. *Id.* at 17 (citing Ex. 1016 ¶ 28; Ex. 1017, 158:5–160:15). As to Patent Owner's argument that Petitioner must show a particular amount of force to create a zero gap condition, Petitioner argues that the claims do not specify any particular amount of force. *Id.* at 18 (citing Ex. 1017, 120:11–121:12). Finally, Petitioner argues that Sawaya does not function like a drywall anchor "perpendicularly engaging the support frame's underside surface via a non-deflectable structure," and instead engages "the support frame at the edge of an opening via an inclined surface of an inwardly deflectable structure." *Id.* (citing Ex. 1017, 165:11–24).

In its Sur-reply, Patent Owner first addresses Petitioner's reliance on the dimensions of the panel and trim to create a zero gap condition, and argues that even if it would have been obvious to change those dimensions, that does not mean that the claimed fastener was configured to provide the zero gap condition. PO Sur-reply 4–5. As to the downward urging issue, Patent Owner repeats its argument that "Sawaya's clip wings do not provide any dynamic forces," and instead "are an interference mechanism that

prevents the fastener from being pulled back out of the hole." *Id.* at 6–7. Patent Owner also stresses that Sawaya describes its wings as extending entirely through the opening in the panel and secured on the rear side. *Id.* at 7 (citing PO Resp. 27–28; Ex. 2008 ¶¶ 85–93). According to Patent Owner, Sawaya's text distinguishes it from the reference before the Examiner that met the limitation. *Id.* at 7–8 (citing Pet. Reply 13; Ex. 2012).

2) Discussion

Based on our review of the arguments and evidence, we find that Petitioner establishes sufficiently that the proposed combination discloses a sealing foot "configured to flex . . . in order to create the substantially zero gap between the surface element and the support structure in response to the clip portion pressing against the interior surface of the acceptance opening to urge the retainer downwardly into the acceptance opening" as required by claim 1, and the similar requirements in claim 16. *See* Pet. 38–39, 42–44; Pet. Reply 7–19. Petitioner supports its interpretation of Sawaya with credible declarant testimony and Sawaya's disclosures. *See* Ex. 1005 ¶¶ 81, 86–87, 101–104, 121–123; Ex. 1016 ¶¶ 14–29; Ex. 1008 ¶¶ 3, 53–54, Figs. 2, 6.

Sawaya discloses resin clip 10 having leg portion 26 inserted in a hole of panel 50. Ex. 1008, Fig. 6, ¶¶ 3, 25, 53. Leg portion 26 includes two sets of elastic locking parts 28, 28. *Id.* ¶ 25. Petitioner relies on annotated versions of Sawaya's figures to illustrate its interpretations, and we reproduce Petitioner's annotated version of Sawaya's Figure 6 below. *See* Pet. Reply 15.

FIG. 6

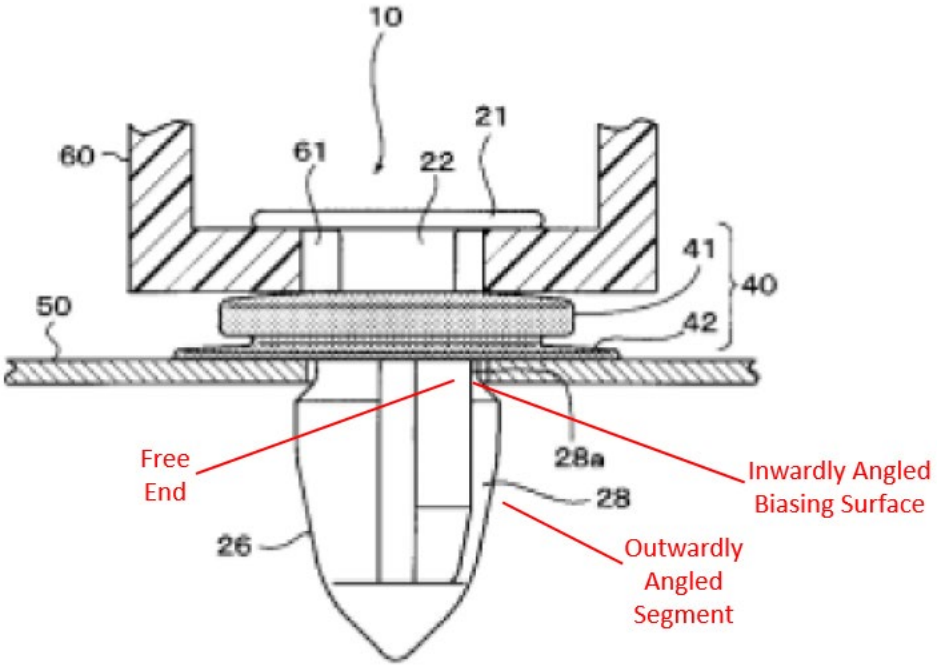

The annotated version of Figure 6 shows leg portion 26 having elastic locking parts 28 and reduced diameter part 28a within a hole in panel 50. Ex. 1008, Fig. 6, ¶ 53. Petitioner labels the top of one of the elastic locking parts 28 a "Free End" and labels an outer surface at the top of the locking part 28 an "Inwardly Angled Biasing Surface," with a lower portion of part 28 labeled an "Outwardly Angled Segment." Pet. Reply 15. According to Sawaya, "[w]hen the leg part of the resin clip is inserted into a hole of a panel . . . the leg part is elastically locked to a hole edge of a rear surface of the panel, such that the member to be attached and the panel are secured." Ex. 1008 ¶ 3.

Petitioner persuasively argues, with credible declarant support, that Sawaya discloses elastic parts 28 pressing against the interior surface of the opening in panel 50 as required by the claim limitation. *See* Pet. 38–39, 43; Pet. Reply 12–19; Ex. 1005 ¶¶ 81, 87; Ex. 1016 ¶¶ 24–29. Sawaya directly

supports this position by showing its elastic parts in direct contact with the interior of the opening. *See* Ex. 1008, Figs. 2, 6. Sawaya also describes the leg part as "elastically locked to the hole edge," which suggests that the elastic parts 28 are "elastically" deformed within the hole and therefore pressing outward to engage a "*hole* edge," which supports Petitioner's position that the elastic parts press against a portion of the interior surface of the opening. *See id.* ¶ 3 (emphasis added). Petitioner also persuasively argues, with credible declarant support, that when the angled surface of elastic parts 28 press against the opening, they urge the retainer downwardly into the opening. *See* Pet. 38–39, 43; Pet. Reply 12–19; Ex. 1005 ¶¶ 81, 87; Ex. 1016 ¶¶ 22–29. Sawaya also directly supports this position by describing the retainer as "elastically locked to a hole edge," which suggests it resists removal due to the pressing action of the angled surfaces of the elastic parts 28 against the opening. Ex. 1008 ¶ 3, Fig. 6. Petitioner further persuasively argues that its proposed modification of Sawaya results in a zero gap condition created at least partially "in response to"[17] the clip portion pressing against the interior surface of the opening to urge the retainer downwardly. *See* Pet. 43; Pet. Reply 12–19; Ex. 1005 ¶ 87; Ex. 1016 ¶¶ 28–29.

---

[17] We do not read the claim as requiring creation of a zero gap condition solely in response to the pressing and downward urging of the clip in the opening, and Patent Owner does not argue for such a construction. We also agree with Petitioner that the relatively small movements of the retainer play a limited role in determining whether a zero gap condition exists when compared to other factors, such that it would not be possible for the downward urging of the retainer in the opening alone to create a zero gap. *See* Pet. Reply 7–11.

We are also persuaded by Petitioner's alternative argument that assumes Sawaya's clip as shown in Figure 6 did not exert any force against the opening or urge the retainer downwardly as Patent Owner contends. *See* Pet. Reply 17. In that situation, Petitioner persuasively argues that the clip would still be configured to, or designed to press against the opening and urge the clip downward as claimed in response to any forces tending to pull the retainer upward in the opening, such as vibrations. *See id.* (citing Ex. 1016 ¶ 28; Ex. 1017, 158:5–160:15). We agree. Based on the elastic inwardly angled surfaces on Sawaya's elastic parts 28, any upward force would tend to deflect parts 28 inward, causing the angled surfaces to press against the interior surface of the opening, urging the clip downward and tending to flex the seal, which in turn will contribute to creating and maintaining a zero gap condition. *See* Ex. 1005 ¶¶ 28–29.

While not necessary to support our conclusion that Petitioner made its case here, other evidence in the record supports Petitioner's interpretation of Sawaya. *See* Pet. Reply 7, 13, 16–18. First, the '882 patent acknowledges that "W-base" retainers in the prior art, generally similar to Sawaya, "are typically designed as a component of an overall assembly and work in conjunction with the other components with the goal of establishing and maintaining a 'zero gap' condition" and that they do so by providing continuous pull down forces. Ex. 1001, 1:57–67; Pet. 7. This statement at least suggests that Sawaya's similarly shaped retainer may also provide the necessary downward urging of the retainer to provide a zero gap condition. Second, during prosecution of the parent application, the Examiner found that a prior art reference showing a retainer having biased angled surfaces were adapted to press against an interior surface of the opening to urge the

retainer downwardly. Ex. 1003, 230–231; Ex. 2012, Fig. 4; Pet. Reply 13–14. While Patent Owner now argues that other aspects of Sawaya differ from that reference, Patent Owner does not dispute that as a general matter biased angled surfaces perform in that manner. *See* PO Sur-reply 7–8. Third, the '882 patent incorporates by reference a patent with a retainer having generally similar angled surfaces to that shown in Sawaya, and the patent states that the slope of those surfaces "tends to draw the foot 3 into the orifice 20." Ex. 1006 (US 5,173,026), 3:29–33, Fig. 6; Pet. Reply 16–17; *see also* Ex. 1001, 2:13–19 (incorporating US 5,173,026 by reference). This additional evidence supports Petitioner's interpretation of Sawaya's biased, angled surfaces and the downward forces they produce when elastically deformed within an opening.

We have considered the arguments that Patent Owner and its declarant raise, but find those arguments unpersuasive and less credible than Petitioner's arguments and evidence. *See* PO Resp. 23–31; PO Sur-reply 6–11; Ex. 2008 ¶¶ 82–97. For example, Patent Owner premises many of its arguments on its interpretation of Sawaya as showing a retainer pushed all the way through the opening in the panel such that the elastic parts 28 merely touch the panel opening and exert no dynamic force on it at all. *See* PO Resp. 23–30. If true, according to Patent Owner, Sawaya fails to press against the interior surface of the opening and urge the retainer downward in the opening. *See id.* Patent Owner appears to rely primarily on Sawaya's statement that its "leg part is elastically locked to a hole edge of a rear surface of the panel, such that the member to be attached and the panel are secured." PO Resp. 25, 29–31 (quoting Ex. 1008 ¶ 3).

Patent Owner's interpretation of Sawaya lacks support for several reasons. First, Sawaya does not describe its resin clip as pushed all the way through the panel as Patent Owner asserts; Sawaya states that "the resin clip is inserted *into* a hole of a panel." Ex. 1008 ¶ 3 (emphasis added). Second, although the quoted language refers to a "rear surface of the panel," it does so in the context of describing a "hole edge of a rear surface of the panel," suggesting, as Sawaya's Figure 6 shows, that the angled surfaces engage the edge of the hole defined by the interior surface of the opening and the rear panel surface, which supports Petitioner's position because a hole edge forms part of the hole. *See id.* The '882 patent depicts essentially the same contact between the angled surfaces and the hole edge as Sawaya, further supporting Petitioner's interpretation. *See* Ex. 1001, Fig. 3. Third, Patent Owner fails to give sufficient weight to the fact that Sawaya describes its clip as "*elastically* locked," supporting Petitioner's position that, as shown in Figure 6, elastic parts 28 are elastically deflected within the hole, which causes them to press against the interior surface of the opening and urge the clip downward. Ex. 1008 ¶ 3 (emphasis added). Further, Patent Owner does not address adequately Petitioner's argument that even if Sawaya does not show a clip portion that currently presses against the opening and urges the clip downward, it nevertheless is configured to do so whenever forces tend to pull the clip upward. *See* PO Sur-reply 8–9 (arguing that Petitioner improperly employs a "capable of" construction of the claims without addressing the substance of Petitioner's argument). We view Petitioner's interpretation of Sawaya and its related declarant testimony as more persuasive and credible on these points.

Patent Owner also argues that even if Sawaya's clip exerts some downward force, it does not disclose enough downward force such that a zero gap condition results "in response to" this force. PO Resp. 29. This argument lacks adequate support because the claims do not require any specific amount of force or require the zero gap condition to result from this downward force alone, rather than other factors such as the arrangement and dimensions of the panels. The claim language requires a sealing foot "configured to flex . . . toward a fully flexed condition in order to create the substantially zero gap . . . in response to the clip portion pressing against the interior surface of the acceptance opening to urge the retainer downwardly." Ex. 1001, 8:60–67. In other words, the clip portion must be configured to be urged downwardly enough to flex the seal,[18] which in turn helps create the zero gap condition. Petitioner relies on Sawaya, which shows a clip portion exerting sufficient downward force to flex seal 42 (*see* Ex. 1008, Fig. 6), and a proposed modification based on Iwasaki and Pue that would create a substantially zero gap while Sawaya's clip portion and seal were in this condition, using appropriate sizing and dimensions of the surrounding parts. *See* Pet. 29–33 (motivation to modify to create zero gap), 43 (motivation to modify Sawaya's clip to maintain zero gap); Ex. 1005 ¶¶ 64–71, 86–87. Petitioner's proposal and explanation shows sufficiently that its modifications to Sawaya combined with Sawaya's existing structures satisfy the "in response to" claim requirement.

---

[18] We do not read the claim as requiring the downward urging of the clip portion *alone* must move the seal from an unstressed to a fully flexed position, and Patent Owner does not argue for such a construction. Any downward urging that tends to cause the seal to flex and in turn help create a zero gap condition suffices.

We also disagree with Patent Owner's argument that Petitioner must rely on inherency because the text of Sawaya fails to explicitly teach the claim requirements. *See* PO Resp. 24–25. Petitioner argues that it need not resort to inherency, at least when Patent Owner seems to invoke the doctrine to demand that Petitioner show that the "configured to" function in the claims must actually be performed. Pet. Reply 8. We agree with Petitioner that it need not show that Sawaya actually creates and maintains a zero gap condition or urges the retainer downwardly; "configured to" merely requires an apparatus designed to perform the claimed functions not a method step requiring completed performance of those functions. *See Aspex Eyewear*, 672 F.3d at 1349; PO Sur-reply 9 (arguing that "configured to" means more than "capable of"); Tr. 27:5–24 (counsel for Petitioner arguing that it meets "designed to" construction). Based on review of Petitioner's arguments and evidence, it need not resort to inherency to carry its burden. Petitioner and its declarant rely on Sawaya's express text and figures, which on their face adequately support Petitioner's arguments. For example, Petitioner's declarant relies on text stating that Sawaya's clip, when inserted into an opening, becomes "elastically locked to a hole edge," and Figure 6 shows the angled surface of elastic parts 28 pressed up against the edge of the hole urge the retainer downwardly. *See, e.g.*, Ex. 1005 ¶¶ 81, 87. Those express disclosures support Petitioner's positions. *See id.*

Even if Petitioner must resort to inherency to show that Sawaya's arrangement discloses the claim requirements, as Patent Owner argues, Petitioner has provided sufficient argument and evidence to satisfy that burden. *See* PO Resp. 24; Pet. Reply 12, 14–18; Ex. 1016 ¶¶ 22–29. As Petitioner's declarant puts it, "a downwardly angled force is applied to the

clip whenever an inwardly angled surface of a compressed deflector member is deflected by the interior surface of the acceptance opening," and Sawaya's compressed deflector member with inwardly angled surfaces operates in this same way. Ex. 1016 ¶¶ 23–25. Patent Owner's argument against inherency rests on the argument that the angled surfaces of Sawaya's elastic parts 28 merely touch the hole edge without exerting any force at all on the hole edge, which conflicts with the text of Sawaya stating that after insertion in the opening Sawaya's clip is "*elastically* locked" in place. *See* Ex. 1008 ¶ 3 (emphasis added); PO Resp. 27; PO Sur-reply 6–7; Tr. 38:16–39:15 (counsel for Patent Owner arguing that "[I]f the clips are not in compression then there's no force. They're just sitting there. It's just a contact surface and that's the case in Sawaya."). In other words, when operating from the proper premise that Sawaya discloses elastic parts 28 in compression and its angled surfaces pushing against the opening, Petitioner's argument that the structures must produce some amount of downward urging naturally follows and lacks any persuasive argument in rebuttal.

Based on the foregoing, Petitioner establishes sufficiently that the combination of Sawaya, Pue, and Iwasaki disclose a sealing foot "configured to flex . . . in order to create the substantially zero gap between the surface element and the support structure in response to the clip portion pressing against the interior surface of the acceptance opening to urge the retainer downwardly into the acceptance opening" and the similar language in claim 16.

c. "the sealing foot is disposed outboard from the second platform"

Claim 1 requires a "seal including a body portion engaging the second platform and a sealing foot projecting from the body portion to a free edge

such that the sealing foot is disposed outboard from the second platform." Based on our claim construction above, this limitation does not require a sealing foot located entirely beyond or disposed *entirely* outboard from the second platform.

Petitioner contends that Sawaya's flange 24 discloses the claimed second platform and Sawaya's sealing pad 40 discloses the claimed seal. Pet. 34–35 (citing Ex. 1005 ¶¶ 75–76; Ex. 1008 ¶¶ 18, 27–29, Fig. 2). Petitioner also contends that Sawaya's skirt portion 42 of sealing pad 40 discloses a sealing foot "disposed outboard from the second platform" and provides an annotated version of Sawaya's Figure 2 identifying the sealing foot adjacent the living hinge. *Id.* at 35–36 (citing Ex. 1005 ¶¶ 77–78, 82; Ex. 1008 ¶ 28, Fig. 2).

Patent Owner argues that Sawaya does not disclose a sealing foot disposed outboard from the second platform, but bases its argument on its proposed claim construction, which we decline to adopt. *See* PO Resp. 31–36; Sur-reply 11 ("Under the correct constructions, Sawaya does not satisfy this limitation."). Patent Owner does not argue that Sawaya fails to disclose this limitation if we decline to adopt Patent Owner's construction. *See id.*

Based on our review of the arguments and evidence, Petitioner establishes sufficiently that Sawaya discloses a sealing foot disposed outboard from the second platform. Petitioner adequately supports its position by reference to Sawaya, which shows its sealing foot outboard of its second platform. To help illustrate Petitioner's position, we reproduce Petitioner's annotated version of Sawaya's Figure 2 below (Pet. 36).

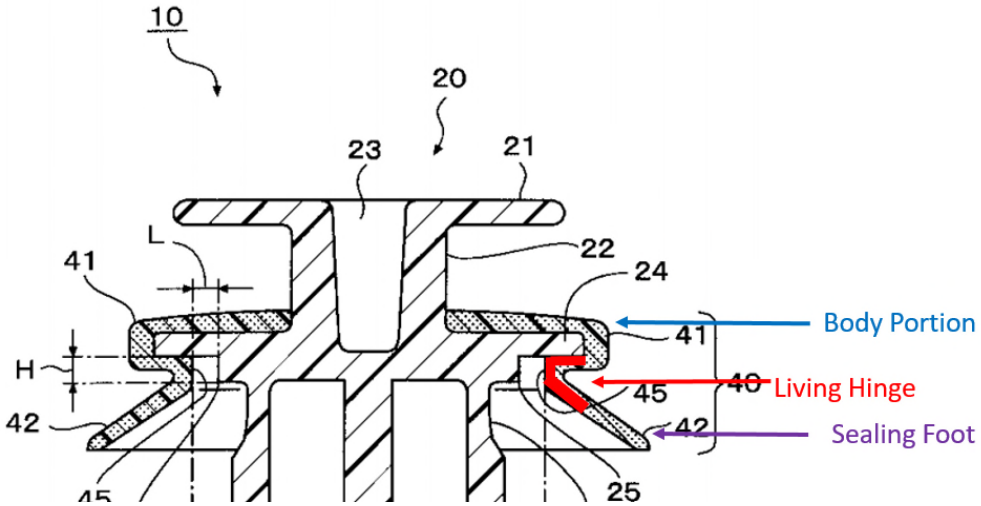

The annotated version of Sawaya's Figure 2 shows resin clip 10 having flange part 24 and sealing pad 40, which includes attaching part 41, skirt part 42, and folded back part 45. Ex. 1008 ¶ 55. Attaching part 41 of sealing pad 40 covers an upper surface and a portion of a lower surface of flange part 24, and skirt part 42 extends obliquely and outward from the inner circumference of attaching part 41. *Id.* at ¶ 28. Petitioner relies on flange part 24 as the claimed "second platform," and the annotated version of Figure 2 shows the portions of sealing pad 40 that Petitioner relies on for the claimed body portion, living hinge, and sealing foot of the seal, with the sealing foot corresponding to Sawaya's skirt 42. *See* Pet. 34–36. Petitioner supports its interpretation of Sawaya with credible expert testimony. *See id.* (citing Ex. 1005); Ex. 1005 ¶¶ 74–78, 82. As Sawaya's Figure 2 makes clear, Sawaya's skirt 42, i.e., the sealing foot, extends well beyond the flange part 24, i.e., the second platform.

Based on the foregoing, Petitioner establishes adequately that Sawaya discloses a sealing foot "disposed outboard from the second platform."

d. Remaining Limitations and Claims

Other than the arguments addressed above, Patent Owner does not offer any arguments specifically addressing the remaining limitations of claims 1 or 16, or the remaining challenged claims. *See* PO Resp. 15–36. We have reviewed these aspects of Petitioner's contentions, and determine that the Petition provides a sufficient showing that the combination of Sawaya, Pue, and Iwasaki discloses each limitation of claims 1–20 and that one of ordinary skill in the art would have had reason to combine the teachings of Sawaya, Pue, and Iwasaki as Petitioner proposes. We need not set forth formal findings as to the undisputed assertions by Petitioner.[19] We adopt Petitioner's arguments and evidence as to these claims and limitations as our own. *See* Pet. 28–61.

e. Conclusion as to Claims 1–20

"Once all relevant facts are found, the ultimate legal determination [of obviousness] involves the weighing of the fact findings to conclude whether the claimed combination would have been obvious to an ordinary artisan." *Arctic Cat Inc. v. Bombardier Recreational Prods. Inc.*, 876 F.3d 1350, 1361 (Fed. Cir. 2017). Above, based on the full record before us, we provide our factual findings regarding (1) the level of ordinary skill in the art, (2) the

[19] *See In re NuVasive, Inc.*, 841 F.3d 966, 974 (Fed. Cir. 2016) ("Although the Board did not make findings as to whether any of the other claim limitations (such as fusion apertures or anti-migration teeth) are disclosed in the prior art, it did not have to: NuVasive did not present arguments about those limitations to the Board. . . . The Board, having found the only disputed limitations together in one reference, was not required to address undisputed matters."); Paper 8, 7 (emphasizing that "any arguments for patentability not raised in the response may be deemed waived").

scope and content of the prior art, (3) any differences between the claimed subject matter and the prior art; and (4) objective indicia of nonobviousness.

In particular, we find that (1) Petitioner's proposed level of ordinary skill in the art is consistent with the art of record; (2) Petitioner's proposed combination of Sawaya, Pue, and Iwasaki discloses all the limitations of claims 1–20; (3) one of ordinary skill in the art would have been motivated to modify Sawaya in light of Pue and Iwasaki's teachings as Petitioner proposes; and (4) the parties do not introduce or rely upon any objective indicia of nonobviousness. Weighing these underlying factual determinations, Petitioner has shown, by a preponderance of the evidence, that claims 1–20 of the '882 patent are unpatentable as obvious over the combination of Sawaya, Pue, and Iwasaki.

E. Obviousness Based on Benedetti, Pue, and Iwasaki

Petitioner challenges claims 1–20 under 35 U.S.C. § 103, contending that the claimed subject matter would have been obvious over "Benedetti [a]lone and/or in light of Pue, or further in view of Iwasaki." Pet. 61–91.[20] Patent Owner argues that Petitioner fails to show that the asserted references render the claimed subject matter obvious. PO Resp. 36–57. We first provide an overview of relevant aspects of Benedetti, and then turn to the parties' arguments.

1. Benedetti

Benedetti "relates to automobile vehicle trim fasteners." Ex. 1012, 1:5–6. Benedetti's fastener includes a post and first and second elastically

[20] We focus on the challenge based on Benedetti, Pue, and Iwasaki, and need not reach challenges based on Benedetti alone, or a combination of Benedetti and Pue or Benedetti and Iwasaki.

deflectable wings that deflect toward the post. *Id.* at code (57). Benedetti also discloses two seal members. *Id.*

We reproduce Benedetti's Figure 4 below.

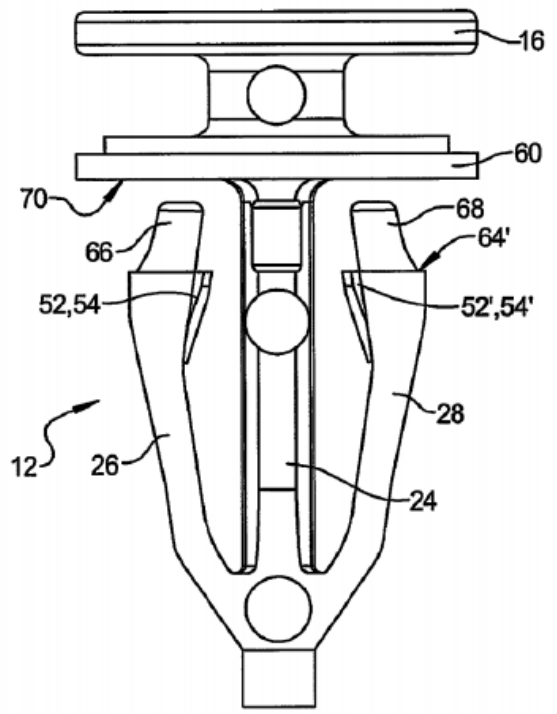

FIG 4

Figure 4 shows a front elevational view of Benedetti's fastener. Ex. 1012, 2:58–59. Figure 4 depicts Benedetti's fastener 10 having a first fastener portion 12, component engagement head 16, central post 24, and first and second deflecting wings 26, 28 that deflect toward post 24. *Id.* at 3:12–13, 3:28–29, 3:57–60.

Other figures of Benedetti, discussed in more detail below, depict first resilient seal member 22 and second resilient seal member 32. *Id.* at 3:28–46, Figs. 5–8, 10. "First resilient seal member 22 . . . can include any of a curved, an umbrella or a concave shape collectively referred to as a concave seal surface 44 directed away from component engagement head 16." *Id.* at 4:15–18. Fastener 10 can be used to connect panel 100 to trim

member 110. *Id.* at 6:57–60. When used in this manner, a seal is created between first resilient seal member 22 and first panel face 102 of panel 100. *Id.* at 7:2–7.

2. Discussion

Petitioner asserts that the combination of Benedetti, Pue, and Iwasaki discloses all of the limitations of the challenged claims. Pet. 61–91. Petitioner provides analysis of each limitation of the claims, with citations to the references that correspond to each of the claim limitations. *Id.* Petitioner also cites to the relevant declarant testimony. *Id.* (citing various portions of Ex. 1014).

Patent Owner argues that Petitioner fails to (1) provide a sufficient reason to modify Benedetti (applicable to all claims); (2) establish that the combination provides a "zero gap" condition in response to a downward urging of the retainer (applicable to claims 1–10 and 16); (3) establish that the combination discloses a sealing foot disposed outboard from the second platform (applicable to all claims); (4) establish that Benedetti discloses the claimed "living hinge" (applicable to all claims); and (5) establish that the combination discloses an angled biasing surface configured to press against the interior surface of the opening (applicable to claims 8 and 16). PO Resp. 15–36. We address each of Patent Owner's arguments in turn below. Because Patent Owner's first four arguments apply to claim 1, and Patent Owner addresses the claims subject to each of those arguments as a group, we will focus on the limitations in claim 1 in our discussion with an understanding that the same analysis applies to the other claims in that group. *See id.*

a. Motivation to Modify Benedetti

Petitioner contends that "Benedetti explicitly discloses all but one element of independent Claim 1 . . . maintenance of a substantially zero gap" and that the zero gap would have been obvious to one of ordinary skill in the art based on Benedetti alone and further in view of Pue and Iwasaki. Pet. 61–63. Petitioner also articulates reasons to modify the relied-upon aspects of Benedetti based on Pue and Iwasaki, with an alleged reasonable expectation of success. *Id.* at 62–63. As to the motivation to modify Benedetti to maintain a "substantially zero gap" and the expectation of success in doing so, Petitioner relies arguments that are the same as or very similar to those Petitioner relies on in the context of Sawaya discussed above. *Id.* at 62 (citing Pet. 29–33; Ex. 1014 ¶¶ 62–67) (incorporating arguments made in context of Sawaya for motivation to combine), 62–63 (citing Ex. 1014 ¶¶ 68–69) (arguing that a POSITA would have expected success in modifying Benedetti because it would have been a routine matter to adjust the sizes and dimensions of Benedetti's fastener to result in a zero gap condition). In its Reply, Petitioner simply incorporates its arguments and evidence as to Sawaya into its arguments as to Benedetti. *See* Pet. Reply 22.

Patent Owner's arguments as to the motivation to modify Benedetti are nearly identical to those Patent Owner raises as to the motivation to modify Sawaya that we addressed above. *See* PO Resp. 36–40 ("Petitioner's Ground 2 regarding Benedetti suffers at the outset from the same deficiencies as its Ground 1 regarding Sawaya."); PO Sur-reply 17 ("Petitioner's Benedetti-based Ground 2 arguments fail for the same reasons the Sawaya-based Ground 1 arguments fail."). For example, Patent Owner argues that "reciting a generalized motivation to solve a problem is not

enough to establish obviousness," Petitioner fails to provide an adequate reason to modify Benedetti in the specific manner required by the claims, and Petitioner's stated basis for how it would implement the modification to Benedetti does not track the claimed solution. *See* PO Resp. 36–40.

Because the parties rely on the same arguments here as they did above in the context of the discussion of the motivation to modify Sawaya, for the same reasons we discussed above we find Petitioner's arguments and evidence persuasive and Patent Owner's arguments unpersuasive. Petitioner has made a sufficient showing that one of ordinary skill in the art would have been motivated to dimension the fastener Benedetti discloses, along with the surface element and support structure, to create and maintain a substantially zero gap condition between the surface element and support structure, for the reasons provided by Petitioner. *See* Pet. 29–33, 62–63; Ex. 1014 ¶¶ 62–69.

b. "substantially zero gap . . in response to the clip portion pressing against the interior surface of the acceptance opening to urge the retainer downwardly"

1) The Parties' Positions

The parties' positions as to the disputes surrounding the "substantially zero gap" limitation are similar to those made above in the context of the challenge based on Sawaya. *See* Pet. 69–70, 73–74; Pet. Reply 22–29; PO Resp. 41–48; PO Sur-reply 17–22. For example, as to the claim limitation requiring a clip portion configured to press against the interior surface of the opening and urge the clip downward, Petitioner relies on Benedetti's deflecting wings 26, 28 inserted in hole 100 (the claimed opening), with the wings springing elastically once inserted such that the inwardly angled surfaces of deflecting wings press against opening 100 and urge the fastener

downward. *See* Pet. 69–70 (citing Ex. 1012, 2:37–39, 6:53–56, 7:39–52, 8:18–20, Figs. 4, 10; Ex. 1014 ¶ 78). As to the limitation requiring a sealing foot configured to flex in response to the pressing and urging of the clip, Petitioner relies on this same structure and arrangement in Benedetti and argues that this disclosure, when combined with the embodiment in Benedetti's Figure 8 (showing a flexed seal), "teaches that the sealing foot is configured to create a substantially zero gap between the surface element and the support structure in response to the clip portion pressing against the interior surface of the acceptance opening to urge the retainer downwardly." *Id.* at 73–74 (citing Ex. 1012, 2:37–39, 6:53–56, 7:39–52, 8:18–20, Figs. 4, 10; Ex. 1014 ¶ 85).

Patent Owner raises arguments against Petitioner's assertions that are similar to those we reviewed above. *See* PO Resp. 41–48; PO Sur-reply 17–22. For example, Patent Owner argues that "Petitioner fails to show Benedetti provides this claimed 'downwardly' force" and must rely on inherency, which Petitioner cannot do because Benedetti merely describes inwardly deflecting wings without mentioning downward forces. *See* PO Resp. 41–43 (citing Ex. 1012 at 8:18–20; Ex. 1014 at ¶ 78). According to Patent Owner, Benedetti describes its clip wings as fully expanded on the other side of the panel such that they no longer exert elastic forces on the opening. *Id.* at 43–44 (citing Ex. 1012, 7:43–52, 8:13–18; Ex. 2008 ¶¶ 123–133; Ex. 2011, 131); *see also* PO Sur-reply 18). Patent Owner characterizes the portion of Benedetti that Petitioner relies upon as merely describing "a small amount of inward deflection" that simply makes "the fastener tight by increasing the friction of the fastener against the opening, i.e., <u>the wings are pressing in, not down</u>." PO Resp. 44 (citing Ex. 2008 ¶¶ 125–126). Patent

Owner also argues that Benedetti discloses a gap between the fastener and a surface element in one of its figures, suggesting that Benedetti does not exert a downward force on the fastener. *Id.* at 45–46 (citing Ex. 1012, Fig. 10; Ex. 2008 ¶ 127; Ex. 2011, 56–57). Patent Owner also relies on Benedetti's seal 32 locating between its wings and the opening (unlike Sawaya's wings, which contact the opening directly), and argues that the seal material would compress and "prevent any downward force." *Id.* at 46–48 (citing Ex. 1012, Fig. 10; Ex. 2008 ¶¶ 128–133; Ex. 2011, 136–137).

Petitioner replies that "Benedetti's deflecting wings include inwardly angled biasing surfaces that operate under compression, and therefore, urge the clip downwardly." Pet. Reply 22–24 (citing Ex. 1012, 3:40–43, 7:22–38, 8:18–20, Figs. 1, 4; Ex. 1014 ¶ 53; Ex. 1016 ¶¶ 40–42). As to Patent Owner's argument that Benedetti's deflecting wings merely assist in fastener retention, Petitioner argues that Patent Owner "points to nothing requiring this downward urging be the sole or even primary means of maintain a zero gap relation" and the claims do not require any particular amount of urging downwardly. *Id.* at 24. As to the small gap shown in Benedetti's Figure 10, Petitioner argues that the figures illustrate a fastener with wings under compression with angled surfaces pressing against the opening urging it downward, and this "definitive description outweighs any purported ambiguity in the Figures" that conflict with the way a fastener would be used in the art. *Id.* at 24–25 (citing Ex. 1012, 2:48–51; Ex. 1016 ¶¶ 40–44; Ex. 1017, 172:9–174:9). As to the presence of seal member 32, Petitioner argues that it "is irrelevant to whether or not Benedetti's 'clip portion' has the claimed configuration (*i.e.*, deflecting wings having inwardly angled distal ends)." *Id.* at 25–26. As to whether seal 32 impedes downward

movement as Patent Owner alleges, Petitioner argues that the claims do not require actual movement in all circumstances, and only require a clip portion configured to urge the retainer downwardly, and Benedetti discloses a configuration that results in downward forces as a result of forces applied to the angled surfaces of Benedetti's clip. *Id.* at 27–28 (citing Ex. 1016 ¶¶ 40–42).

In its Sur-reply, Patent Owner argues that (1) Petitioner cannot rely on one sentence in Benedetti disclosing inward deflection to establish downward force; (2) the gap shown in Benedetti's Figure 10 shows the lack of any downward force; (3) the claims do require a particular amount of force—"enough to result in the 'zero gap condition;'" and (4) Petitioner fails to adequately rebut Dr. Pratt's assertion that seal member 32 prevents forces from urging the fastener downward. PO Sur-reply 17–22.

2) Discussion

Based on our review of the arguments and evidence, we find that Petitioner establishes sufficiently that the proposed combination discloses a sealing foot "configured to flex . . . in order to create the substantially zero gap between the surface element and the support structure in response to the clip portion pressing against the interior surface of the acceptance opening to urge the retainer downwardly into the acceptance opening" as required by claim 1. *See* Pet. 69–70, 73–74; Pet. Reply 22–29. Petitioner supports its interpretation of Benedetti with credible declarant testimony and Benedetti disclosures. *See* Ex. 1014 ¶¶ 53, 78, 85; Ex. 1016 ¶¶ 40–44; Ex. 1012, 2:37–39, 3:40–43, 6:10–15, 6:37–41, 6:53–65, 7:22–52, 8:18–20, Figs. 4, 10.

Benedetti discloses central fastener 10 having post 24 and first and second deflecting wings 26, 28 that deflect toward post 24. *Id.* at 3:12–13,

3:28–29, 3:57–60. Benedetti states that the "tendency of each of the first and second deflecting wings 26, 28 to resist deflection also enhances the ability of fastener 10 to resist pull out." *Id.* at 6:54–56. Benedetti further states that a "limited inward deflection of first and second deflecting wings 26, 28 can also be retained in the fastener installed position to further assist in fastener retention." *Id.* at 8:18–20. Benedetti's figures also show deflecting wings with ends that have inwardly angled surfaces that contact the interior surface of the opening upon insertion. *Id.* at Figs. 4, 8, 10. All of these express teachings of Benedetti directly support Petitioner's argument that Benedetti's deflecting wings with inwardly angled surfaces are configured to press against the interior of the opening and urge Benedetti's fastener downwardly and maintain a zero gap condition. *See* Pet. 69–70, 73–74; Pet. Reply 22–29; Ex. 1014 ¶¶ 53, 78, 85; Ex. 1016 ¶¶ 40–44. Given these express teachings, we do not agree with Patent Owner that Petitioner must resort to inherency. In addition, for the reasons stated above addressing the Sawaya-based ground, the '882 patent, the Examiner's approach to the prior art in the prosecution history and other related patents all support the notion that when inwardly angled surfaces of an elastic wing push against an opening, the resulting forces urge the retainer downwardly.

Patent Owner's arguments against Petitioner's interpretation of Benedetti are unpersuasive. First, Patent Owner argues that the "principal way in which Benedetti's fastener is retained is through the use of clip wings that expand on the other side of the panel and lock it in place," but that interpretation ignores the express text of Benedetti that the wings are, in at least one embodiment, inwardly deflected to assist in fastener retention. PO

Resp. 43; Ex. 1001, 8:18–20. As we (and Petitioner) read Benedetti, Benedetti may disclose an embodiment with its wings fully extended and not in compression, but it also discloses an alternative option where the wings are compressed and therefore biased outwards toward the interior surface of the opening: "A limited inward deflection of first and second deflecting wings 26, 28 *can also be retained* in the fastener installed position to further assist in fastener retention." *Id.* at 8:18–20 (emphasis added). Patent Owner eventually acknowledges that Benedetti discloses this additional embodiment with inwardly deflected wings, and the fact that Benedetti's "principal" focus may be another embodiment does not undermine Petitioner's argument. *See* PO Resp. 43–44 ("By having Benedetti's wings exert a small amount of inward deflection . . . .").

Second, Patent Owner's argument that the presence of seal 32 between the clip wings and the opening prevents any downward force lacks adequate support. *See* PO Resp. 46 (citing Ex. 2008 ¶¶ 128–133). The cited declarant testimony does not make clear whether it addresses the "principal way" Benedetti operates without any inward deflection, which Patent Owner focuses on, or the alternative embodiment Petitioner relies upon, as noted directly above. *See* Ex. 2008 ¶¶ 128–133. It may be true that the seal prevents downward force when the clip wings are fully extended, but not when in compression. In addition, the declarant testimony stresses that the seal helps prevent certain downward movement but the claims do not require any specific amount of downward urging or movement. *See id.*; Pet. Reply 27. Petitioner more persuasively argues, with declarant support, that seal 32 running parallel to the inwardly angled surfaces would not eliminate the

pressure applied to the inwardly angled surfaces in a manner that removes any downward forces. Pet. Reply 27–28; Ex. 1016 ¶¶ 40–42.

Third, Patent Owner relies on a gap in Figure 10 as indicative of a lack of downward force in Benedetti's design, but that one aspect of one figure does not override the clear text of Benedetti stating that the clip wings are deflected inwardly in one embodiment. *See* PO Resp. 45; Pet Reply 25. In addition, Benedetti's Figure 10 may not illustrate the moment when the clip wings urging the clip downwardly. Either way, as Petitioner notes, any ambiguity in one figure does not fatally undermine Petitioner's interpretation of Benedetti and its explicit text.

Fourth, Patent Owner argues that even if Benedetti discloses some downward force due to inward deflection of its wings, it lacks sufficient downward force to maintain a zero gap condition in response to the force, but this argument reads the limitation too narrowly. *See* PO Resp. 44; PO Sur-reply 20. As we noted in the context of a very similar argument in the context of the Sawaya challenge, the claims do not require a specific amount of downward force or require the zero gap condition to result from this downward force alone, rather than other factors such as the arrangement and dimensions of the panels. The claim language requires a clip portion configured to be urged downwardly enough to flex the seal, which in turn helps create the zero gap condition. Petitioner relies on Benedetti, which shows a clip portion exerting sufficient downward force to flex Benedetti's seal (first resilient member 22, shown flexed in Figures 8 and 10), and a proposed modification based on Iwasaki and Pue that would create a substantially zero gap while Benedetti's clip portion and seal are in this condition, using appropriate sizing and dimensions of the surrounding parts.

See Pet. 29–33 (motivation to modify to create zero gap), 62–63 (motivation to modify Benedetti's clip to maintain zero gap), 73–74 (describing combination of desire to maintain zero gap and Benedetti's downward urging teachings with Figure 8 teaches creation of zero gap condition in response to downward urging); Ex. 1005 ¶¶ 64–71; Ex. 1014 ¶¶ 84–85. Petitioner's proposal and explanation shows sufficiently that its modifications to Benedetti combined with Benedetti's existing structures satisfy the "in response to" claim requirement.

Based on the foregoing, Petitioner establishes sufficiently that the combination of Benedetti, Pue, and Iwasaki disclose a sealing foot "configured to flex . . . in order to create the substantially zero gap between the surface element and the support structure in response to the clip portion pressing against the interior surface of the acceptance opening to urge the retainer downwardly into the acceptance opening."

c. "the sealing foot is disposed outboard from the second platform"

Based on our claim construction above, the "disposed outboard" limitation does not require a sealing foot disposed *entirely* outboard from the second platform. Petitioner contends that the skirt portion of Benedetti's resilient seal member 22 discloses the claimed "sealing foot" projecting from the seal's body to a free edge (perimeter edge 48) "disposed outboard" from the second platform. Pet. 67 (citing Ex. 2012, Figs. 2, 8; Ex. 1014 ¶ 75); *see also id.* at 64 (identifying seal member connection disk 56 as disclosing the claimed "second platform"). Patent Owner argues that Benedetti does not disclose a sealing foot disposed outboard from the second platform, but bases its argument on its proposed claim construction, which we decline to adopt. *See* PO Resp. 54–57. Patent Owner does not argue that

Sawaya fails to disclose this limitation if we decline to adopt Patent Owner's construction. *See id.*

Based on our review of the arguments and evidence, Petitioner establishes sufficiently that Benedetti discloses a sealing foot disposed outboard from the second platform. Petitioner adequately supports its position by reference to Benedetti, which shows its sealing foot outboard of its second platform. *See* Ex. 1012, Figs. 2, 8. The figures show the skirt portion of first resilient member 22 disposed outboard of the second platform. *See id.*[21]

Based on the foregoing, Petitioner establishes adequately that Benedetti discloses a sealing foot "disposed outboard from the second platform."

d. living hinge

Claim 1 requires a "sealing foot configured to flex about a living hinge provided between the body portion and the sealing foot." Ex. 1001, 8:49–50. Independent claims 11 and 19 also require a "living hinge." *Id.* at 9:58, 10:67. As noted above, based on the parties' agreement, we construe "living hinge" to mean "an area integral to the hinged part at which the part will readily bend or flex."

---

[21] Because the skirt portion of Benedetti's resilient seal member 22 lies entirely outboard of the second platform, Benedetti discloses the "disposed outboard" limitation even if we adopted Patent Owner's proposed construction of "disposed outboard." *See* Ex. 2012, Figs. 2, 8. Patent Owner argues that the sealing foot starts at a point underneath the second platform, but the claims make clear that the sealing foot extends from the seal body, and the portion of the seal Patent Owner relies upon forms part of the seal body that wraps around the second platform, not the sealing foot. *See* PO Resp. 56; Ex. 1001, Fig. 3 (showing seal body portion 52 wrapped around second platform 24).

Petitioner argues that Benedetti's sealing foot, the skirt portion of resilient seal 22, flexes about a living hinge at the point where the sealing foot joins the seal body. Pet. 70. Petitioner relies on annotated versions of Benedetti's Figures 6 and 7 to support its argument, and we produce those annotated figures below (Pet. 71).

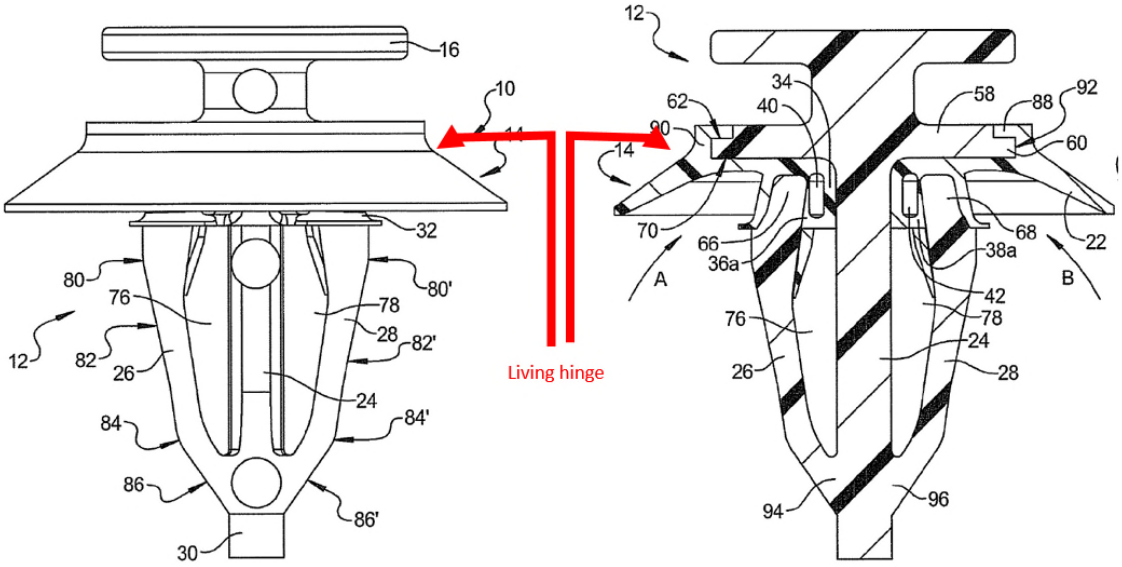

FIG 6 FIG 7

Annotated figures 6 and 7 show the skirt portion of resilient seal 22 and red arrows labeled "Living hinge" pointing to a change in the slope of the skirt portion where it meets the main body of the seal. Pet. 71 (citing Ex. 1014 ¶ 79).

Patent Owner argues that Benedetti fails to disclose a living hinge because "there is no point where the seal foot in Benedetti joins the seal body." PO Resp. 51 (citing Ex. 2008 ¶¶ 131–141). Patent Owner faults Petitioner for pointing to only the top of the seal for the living hinge and argues that the seal does not bend or flex at that location. *Id.* at 52 (citing Ex. 2008 ¶¶ 131–141). According to Patent Owner, Benedetti's "sealing foot does not flex or bend about any 'living hinge' 'area' or 'point,' but

rather flexes throughout the entire length of the sealing foot." *Id.* at 53 (citing Ex. 2008 ¶¶ 137–139); *see also* PO Sur-reply 23–24 (arguing that some flexing throughout its length does not satisfy the claim construction requiring an area where the seal "readily flexes").

Petitioner replies that Patent Owner improperly relies on alleged failures to point out the location of the hinge, but the claims do not specify which surface of the seal includes the living hinge, and the agreed claim construction of "living hinge" does not require any "'scored,' 'thinned, 'bent' or 'angled'" language that would require Petitioner to identify such areas, as Patent Owner suggests. *Id.* Petitioner also argues that if the sealing foot flexes about its entire length as Patent Owner argues, that would include a flexing living hinge. *Id.*

Based on our review of the arguments and evidence, Petitioner establishes sufficiently that Benedetti discloses a "living hinge." *See* Pet. 70–71 (citing Ex. 1012, Figs. 6-8; Ex. 1014 ¶¶ 79–81). Petitioner points to an area on the top of resilient seal in Benedetti's Figures 6 and 7 where the sealing foot meets the seal body. *Id.* at 71. When comparing Benedetti's Figure 7 showing sealing foot in an unstressed condition and Figure 8 in a stressed condition, the sealing foot pivots around the area Petitioner identifies as the living hinge, supporting Petitioner's position. *See id.*; Ex. 1012, Figs. 6–8.

Patent Owner's arguments are unpersuasive because they do not adequately track the claim construction Patent Owner agreed to, which does not require identifying a specific point, line, scored area, or surface on the seal that discloses the living hinge. The agreed construction merely requires identification of "an area" that "will readily bend or flex." Further, we

disagree with Patent Owner's assertion that the seal flexes about its entire length (*see* Figures 7 and 8, showing the seal pivot about the area identified by Petitioner), and even if it did so, the point at which the seal most "readily" flexes appears to correspond to the area identified by Petitioner.

We find that Petitioner establishes sufficiently that Benedetti discloses the claimed "living hinge."

e. angled biasing surface configured to press against the interior surface of the opening (Claims 8 and 16)

Dependent claims 8 and 16 each require an "angled biasing surface . . . configured to press against" an "interior surface of the acceptance opening." Ex. 1001, 9:30–32, 10:24–25. Petitioner argues that Benedetti discloses this limitation because its angled biasing surfaces press against the interior surface of the opening. Pet. 81 (citing Ex. 1014 ¶ 101), 87 (citing Ex. 1014 ¶ 119). Patent Owner argues that the claim language requires two surfaces that press against and contact each other. PO Resp. 49. Patent Owner further argues that seal 32, located between the angled biasing surfaces and the opening, prevents direct contact between the two surfaces. *Id.* at 50–51; PO Sur-reply 22 ("No 'surface' of Benedetti's clip presses against any 'surface' of the acceptance opening due to the seal between those two surfaces."). Petitioner replies that the "claims do not recite these segments are in contact with the acceptance opening, merely that they press against one another at these surfaces" and that the specification uses different language to denote surfaces that touch one another. Pet. Reply 28 (citing Ex. 1001, 6:56–59). Petitioner further contends that the claims do not exclude additional structures and that the use of the term "surface" in the claims does not require contact. *Id.* at 29.

The parties appear to agree on Benedetti's relevant structure because Petitioner does not contest Patent Owner's argument that Benedetti's seal 32 prevents direct contact between the angled biasing surface and the interior surface of the opening. Accordingly, the dispute turns on claim scope, and whether the claims require contact between the two claimed surfaces. We agree with Patent Owner that the most natural reading of the claim language requiring one surface to "press against" another surface requires contact between the two surfaces. *See* PO Resp. 49. The '882 patent's specification consistently shows exactly that in the figures, where the clip's angled biasing surface (44) directly contacts the interior surface of the opening. *See* Ex. 1001, Figs. 3, 5. The fact that the specification may also use other terms to describe direct contact between surfaces, as Petitioner alleges, does not mandate a broader construction. Because we interpret the relevant claim language to require contact between the angled biasing surface and the interior surface of the opening, and Petitioner does not assert that Benedetti discloses any such contact, Petitioner does not establish adequately that Benedetti discloses this limitation.

Based on our review of the arguments and evidence, Petitioner does not establish adequately that Benedetti discloses an "angled biasing surface . . . configured to press against" an "interior surface of the acceptance opening."

f. Remaining Limitations and Claims

Other than the arguments addressed above, Patent Owner does not offer any arguments specifically addressing the remaining limitations of claim 1 or the remaining challenged claims 2–7, 9–15, and 17–20. *See* PO Resp. 36–57. We have reviewed these aspects of Petitioner's contentions, and determine that the Petition provides a sufficient showing that the

combination of Benedetti, Pue, and Iwasaki discloses each limitation of claims 1–7, 9–15, and 17–20 and that one of ordinary skill in the art would have had reason to combine the teachings of Benedetti, Pue, and Iwasaki as Petitioner proposes. We need not set forth formal findings as to the undisputed assertions by Petitioner.[22] We adopt Petitioner's arguments and evidence as to these claims and limitations as our own.

g. Conclusion as to Claims 1–20

"Once all relevant facts are found, the ultimate legal determination [of obviousness] involves the weighing of the fact findings to conclude whether the claimed combination would have been obvious to an ordinary artisan." *Arctic Cat Inc. v. Bombardier Recreational Prods. Inc.*, 876 F.3d 1350, 1361 (Fed. Cir. 2017). Above, based on the full record before us, we provide our factual findings regarding (1) the level of ordinary skill in the art, (2) the scope and content of the prior art, (3) any differences between the claimed subject matter and the prior art; and (4) objective indicia of nonobviousness.

In particular, we find that (1) Petitioner's proposed level of ordinary skill in the art is consistent with the art of record; (2) Petitioner's proposed combination of Benedetti, Pue, and Iwasaki discloses all the limitations of claims 1–7, 9–15, 17–20, but not claims 8 and 16; (3) one of ordinary skill in the art would have been motivated to modify Benedetti in light of Pue and Iwasaki's teachings as Petitioner proposes; and (4) the parties do not introduce or rely upon any objective indicia of nonobviousness. Weighing these underlying factual determinations, Petitioner has shown, by a preponderance of the evidence, that claims 1–7, 9–15, 17–20 of the '882

[22] *See In re NuVasive, Inc.*, 841 F.3d at 974; Paper 8, 7 (emphasizing that "any arguments for patentability not raised in the response may be deemed waived").

patent are unpatentable as obvious over the combination of Benedetti, Pue, and Iwasaki. Petitioner has not shown, by a preponderance of the evidence, that claims 8 or 16 are unpatentable as obvious based on Benedetti, Pue, and Iwasaki. *See supra* II.E.2.e.

F. Patent Owner's Motion to Exclude

Patent Owner moves to exclude Petitioner's Exhibit 1018. *See* Paper 33, 1. Exhibit 1018 is an exhibit of David Baldwin, the translator that provided the original translation of Sawaya. *See* Ex. 1008, 1. Ex. 1018 provides further information regarding a disputed term in Sawaya. Ex. 1018. Patent Owner argues that the new declaration provides improper technical expert testimony. Paper 33, 1–2. Petitioner opposes the motion, and argues that the translator does not provide technical expert testimony but instead merely clarifies the meaning of a term in response to Patent Owner's attempt to distort that meaning. Paper 35, 1.

We need not reach the merits of Patent Owner's Motion to Exclude because we do not rely on Exhibit 1018 as a basis for any of our findings in this Decision. Accordingly, we dismiss Patent Owner's Motion to Exclude as moot.

CONCLUSION[23]

A summary of our conclusions appears in the chart below:

---

[23] Should Patent Owner wish to pursue amendment of the challenged claims in a reissue or reexamination proceeding subsequent to the issuance of this decision, we draw Patent Owner's attention to the April 2019 *Notice Regarding Options for Amendments by Patent Owner Through Reissue or Reexamination During a Pending AIA Trial Proceeding*. *See* 84 Fed. Reg. 16,654 (Apr. 22, 2019). If Patent Owner chooses to file a reissue application or a request for reexamination of the challenged patent, we remind Patent Owner of its continuing obligation to notify the Board of any such related matters in updated mandatory notices. *See* 37 C.F.R. § 42.8(a)(3), (b)(2).

Claim(s)	35 U.S.C. §	Reference(s)/Basis	Claims Shown Unpatentable	Claims Not Shown Unpatentable
1–20	103	Sawaya, Pue, Iwasaki	1–20	
1–20	103	Benedetti, Pue, Iwasaki	1–7, 9–15, 17–20	8, 16
Overall Outcome			1–20	

ORDER

In consideration of the foregoing, it is hereby:

ORDERED that claims 1–20 of U.S. Patent 10,683,882 B2 have been shown, by a preponderance of the evidence, to be unpatentable;

FURTHER ORDERED that Patent Owner's Motion to Exclude (Paper 33) is *dismissed* as moot; and

FURTHER ORDERED that, because this is a Final Written Decision, the parties to the proceeding seeking judicial review of the decision must comply with the notice and service requirements of 37 C.F.R. § 90.2.

FOR PETITIONER:

Jeremy Kriegel
Ray Ricordati
Thomas Duston
jkriegel@marshallip.com
rricordati@marshallip.com
tduston@marshallip.com

FOR PATENT OWNER:

Eligio Pimentel
Christopher Scharff
epimentel@mcandrews-ip.com
cscharff@mcandrews-ip.com