Trials@uspto.gov
571-272-7822

Paper 11
Date: February 2, 2022

UNITED STATES PATENT AND TRADEMARK OFFICE

BEFORE THE PATENT TRIAL AND APPEAL BOARD

INTEL CORPORATION,
Petitioner,

v.

ACQIS LLC,
Patent Owner.

IPR2021-01095
Patent 8,756,359 B2

Before THU A. DANG, JONI Y. CHANG, and
ROBERT J. WEINSCHENK, *Administrative Patent Judges*.

Opinion for the Board filed PER CURIAM.

Opinion Dissenting filed by *Administrative Patent Judge* WEINSCHENK.

PER CURIAM.

DECISION
Denying Institution of *Inter Partes* Review
35 U.S.C. § 314

I. INTRODUCTION

A. Background and Summary

Intel Corporation ("Petitioner") filed a Petition (Paper 2, "Pet.") requesting an *inter partes* review of claims 10–16 and 22–27 ("the challenged claims") of U.S. Patent No. 8,756,359 B2 (Ex. 1001, "the '359 patent"). ACQIS LLC ("Patent Owner") filed a Preliminary Response (Paper 7, "Prelim. Resp.") to the Petition. With our authorization, Petitioner filed a Reply (Paper 9, "Reply") to the Preliminary Response, and Patent Owner filed a Sur-reply (Paper 10, "Sur-reply") to the Reply.

An *inter partes* review may not be instituted unless "the information presented in the petition . . . and any response . . . shows that there is a reasonable likelihood that the petitioner would prevail with respect to at least 1 of the claims challenged in the petition." 35 U.S.C. § 314(a). In determining whether to institute an *inter partes* review, we "may take into account whether, and reject the petition or request because, the same or substantially the same prior art or arguments previously were presented to the Office." 35 U.S.C. § 325(d). After considering the parties' arguments and evidence, we exercise our discretion under § 325(d) to deny the Petition.

B. Real Parties in Interest

Petitioner identifies the following real parties in interest: 1) Intel Corporation.; 2) Lenovo Group Ltd.; 3) Lenovo PC HK Limited; 4) LCFC (HEFEI) Electronics Technology Co., Ltd.; 5) Lenovo Information Products (Shenzhen) Co., Ltd.; 6) Lenovo (Beijing) Information Technology Ltd.; and 7) Lenovo Centro Tecnológico S. de R.L. de C.V. Pet. 8. Patent Owner identifies itself as the only real party in interest. Paper 5, 2.

C. Related Matters

The parties indicate that the '359 patent is the subject of the following district court cases: 1) *ACQIS LLC v. MITAC Holdings Corp.*, No. 6:20-cv-00962 (W.D. Tex.); 2) *ACQIS LLC v. ASUSTek Computer Inc.*, No. 6:20-cv-00966 (W.D. Tex.); and 3) *ACQIS LLC v. Lenovo Group Ltd.*, No. 6:20-cv-00967 (W.D. Tex.). Pet. 1; Paper 5, 2. Petitioner indicates that the '359 patent is the subject of another petition for *inter partes* review in IPR2021-01094. Pet. 7.

D. The '359 Patent

The '359 patent relates to "an interface channel that interfaces two computer interface buses that operate under protocols that are different from that used by the interface channel." Ex. 1001, 3:13−17. Figure 6 of the '359 patent is reproduced below.

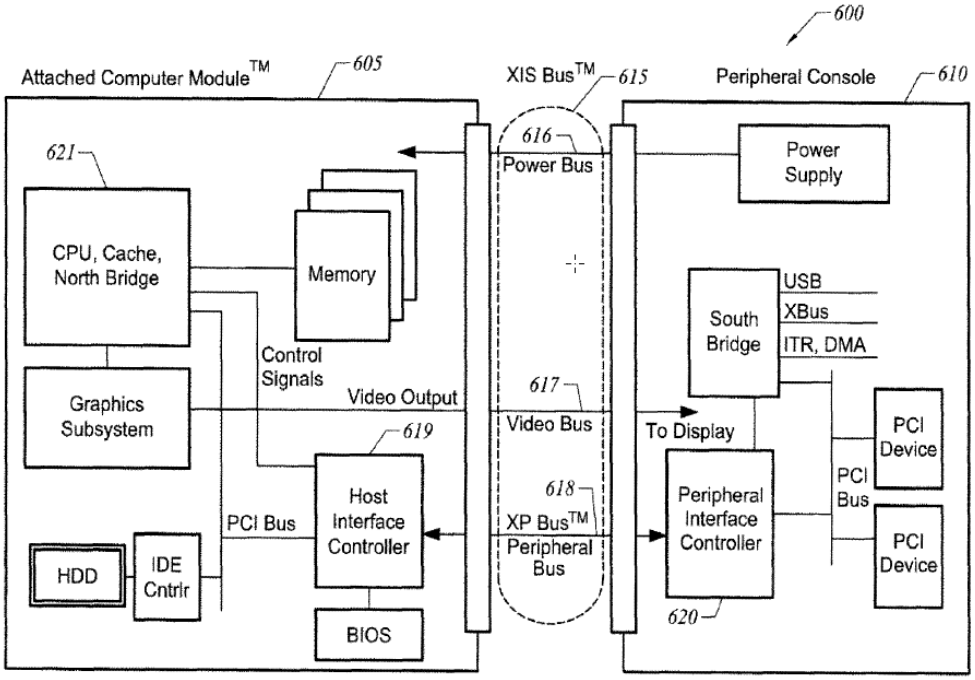

FIGURE 6

Figure 6 shows a block diagram of a computer system using an interface. *Id.* at 15:15−16. Specifically, computer system 600 includes attached computer module ("ACM") 605 and peripheral console 610. *Id.* at 15:16−22. ACM 605 and peripheral console 610 are interfaced through exchange interface system ("XIS") bus 615. *Id.* at 15:22−24. XIS bus 615 includes power bus 616, video bus 617 and peripheral bus ("XPBus") 618, which also is referred to as an interface channel. *Id.* at 15:24−26.

E. Illustrative Claim

Of the challenged claims, claims 10, 14, 16, 22, and 25 are independent. Claim 10 is reproduced below.

> 1. A computer, comprising:
>
> an integrated central processing unit and graphics subsystem in a single chip directly coupled to a first Low Voltage Differential Signal (LVDS) channel comprising at least two sets of unidirectional, serial bit channels;
>
> a connector adapted to convey digital video display signals in a differential signal Transition Minimized Differential Signaling (TDMS) mode and a serial bit stream of encoded address and data bits of a Peripheral Component Interconnect (PCI) bus transaction in a second LVDS channel comprising unidirectional, differential signal line pairs conveying the serial bit stream in opposite directions;
>
> wherein the computer can couple to a console through the connector.

Ex. 1001, 38:47–61.

F. Evidence

Petitioner submits the following evidence:

Evidence	Exhibit No.
Declaration of Dr. John D. Kubiatowicz ("Kubiatowicz Declaration")	1002

Evidence	Exhibit No.
Chu, US 6,345,330 B2, issued Feb. 5, 2002 ("Chu '330")	1003
Cupps, US 2003/0135771 A1, published July 17, 2003 ("Cupps")	1004

G. Asserted Grounds

Petitioner asserts that the challenged claims are unpatentable on the following grounds:

Claim(s) Challenged	35 U.S.C. §	Reference(s)/Basis
10–16, 22–27	103	Chu '330, Cupps

II. ANALYSIS

A. 35 U.S.C. § 325(d)

Petitioner relies on Chu '330 in the only asserted ground. Pet. 38. Petitioner asserts that Chu '330 issued on February 5, 2002, and is prior art to the '359 patent under 35 U.S.C. § 102(b). *Id.* at 10. The '359 patent claims priority to an application filed on May 12, 2000, i.e., before Chu '330 issued on February 5, 2002. Ex. 1001, code (63). But, according to Petitioner, Chu '330 is prior art because the '359 patent is not entitled to a priority date before April 15, 2011. Pet. 21.

Petitioner contends that we should not exercise our discretion to deny the Petition under § 325(d). *Id.* at 130–131. Petitioner argues that although Chu '330 "appears on the voluminous list of references considered by" the United States Patent and Trademark Office ("USPTO" or "Office"), no Examiner cited Chu '330 "against any claims of the '359 Patent or any of its related applications." *Id.* at 130. Petitioner also argues that "the Examiner did not determine the proper priority date of any of the challenged claims during prosecution." *Id.* According to Petitioner, "the Examiner simply accepted the applicant's representation that the '359 Patent properly

incorporated by reference the materials found only in" U.S. Provisional Application No. 60/083,886 ("Chu '886"). *Id.* Petitioner further argues that "even wrongly assuming the Examiner made an implicit determination regarding the priority date, such determination would have been materially erroneous." *Id.* at 131.

Patent Owner argues that we should exercise our discretion to deny the Petition under § 325(d). Prelim. Resp. 11–17. According to Patent Owner, the Office already considered and rejected Petitioner's argument regarding the incorporation by reference of Chu '886. *Id.* at 12–16. Patent Owner also argues that Petitioner does not demonstrate that the Office erred in a manner material to patentability when it previously considered and rejected Petitioner's argument. *Id.* at 16–17.

Section 325(d) provides that in determining whether to institute an *inter partes* review, we "may take into account whether, and reject the petition or request because, the same or substantially the same prior art or arguments previously were presented to the Office." To determine whether to deny institution under § 325(d), we use

> the following two-part framework: (1) whether the same or substantially the same art previously was presented to the Office or whether the same or substantially the same arguments previously were presented to the Office; and (2) if either condition of [the] first part of the framework is satisfied, whether the petitioner has demonstrated that the Office erred in a manner material to the patentability of challenged claims.

Advanced Bionics, LLC v. MED-EL Elektromedizinische Geräte GmbH, IPR2019-01469, Paper 6 at 8 (PTAB Feb. 13, 2020) (precedential) (footnote omitted).

For the reasons discussed below, we exercise our discretion under § 325(d) to deny the Petition.

1. Whether the same or substantially the same art previously was presented to the Office or whether the same or substantially the same arguments previously were presented to the Office

We first determine whether the same or substantially the same arguments previously were presented to the Office. *Advanced Bionics*, Paper 6 at 8. Patent Owner provides a figure (reproduced below with color annotations added) showing the timeline of the priority chain of the '359 patent (light-blue filled box) and other related applications, including Chu '886 (yellow) and U.S. Application No. 09/149,882 ("the '882 application"), which issued as Chu '330 (red). Prelim. Resp. 7.

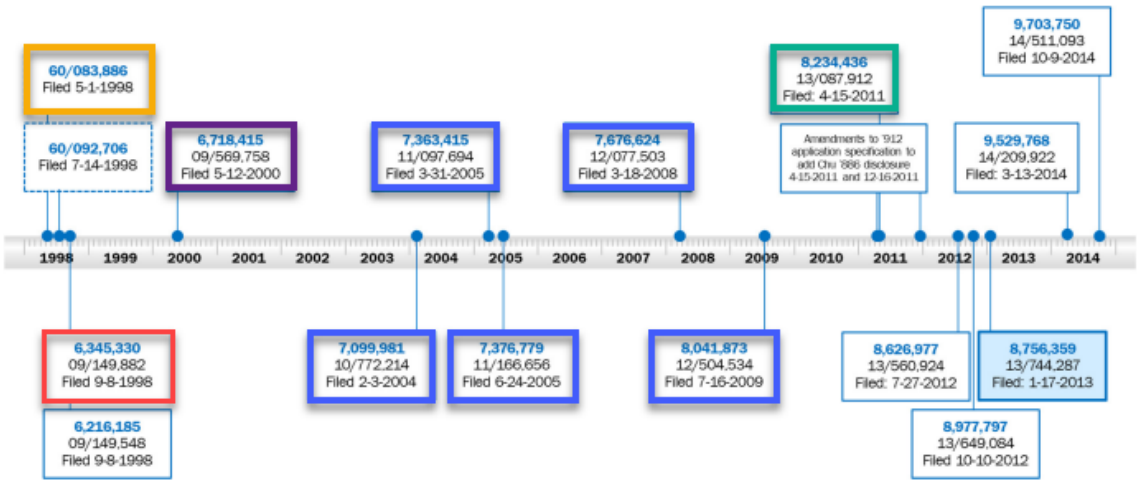

The annotated version of Patent Owner's figure above shows the filing dates of the applications in the priority chain of the '359 patent and other related applications. *Id.* The '359 patent issued from U.S. Application No. 13/744,287 ("the '287 application"), which claims priority to U.S. Application No. 09/569,758 ("the '758 application") (dark purple) filed on

May 12, 2000, through a chain of continuation applications. Ex. 1001, code (63).

U.S. Application No. 13/087,912 ("the '912 application") (green) filed on April 15, 2011, now U.S. Patent No. 8,234,436 ("the '436 patent"), also claims benefit to the '758 application through several other prior applications (dark blue). Ex. 1008, code (63). The '912 application included a preliminary amendment that added Figures 8 and 9 and corresponding disclosure from Chu '886 as Figures 8A and 8B and corresponding disclosure in the '912 application. Ex. 1009, 12−26. The '912 application included another amendment that added Figures 10 and 16 and corresponding disclosure from Chu '886 as Figures 8C and 24 and corresponding disclosure in the '912 application. *Id.* at 379−395.

Petitioner argues in this case that the '359 patent is not entitled to a priority date before April 15, 2011, because the '436 patent's parent applications did not properly incorporate by reference Chu '886, and thus the amendments adding subject matter from Chu '886 introduced new matter. Pet. 21−34. As discussed above, Petitioner argues that "the Examiner did not determine the proper priority date of any of the challenged claims during prosecution," because "[t]he Examiner simply accepted the applicant's representation that the '359 Patent properly incorporated by reference the materials found only in" Chu '886. *Id.* at 130.

We disagree. During prosecution of the '912 application, the applicant asserted that the amendments adding subject matter from Chu '886 were proper because the '758 application (the initial parent application) incorporated by reference the '882 application, which incorporated by reference Chu '886. Ex. 1009, 26, 392. In fact, the prosecution history of

the ’912 application shows that the applicant directed the Examiner to the incorporation by reference statement in the transmittal form of the ’882 application as support for the amendments. *Id.* The applicant argued that “[t]he original ’758 patent application incorporated by reference U.S. Application No. 09/149,882 (now issued as U.S. Patent No. 6,345,330), which, in turn, claimed the benefit of and incorporated by reference U.S. Provisional Application No. 60/083,886 . . . (*See* checked incorporation by reference box in utility patent application transmittal of U.S. Application No. 09/149,882 filed on September 8, 1998).” *Id.*

The Examiner did not object to the amendments adding subject matter from Chu ’886 as new matter or issue a rejection under 35 U.S.C. § 112, ¶ 1. *See id.* at 430. Nor did the Examiner require the applicant to change the benefit claim from “continuation” to “continuation-in-part.” *See id.* Instead, the Examiner entered the amendments and subsequently allowed the ’912 application with the subject matter added from Chu ’886. *Id.*

In addition, Samsung Electronics Co., Ltd. (“Samsung”) previously presented substantially the same arguments to the Office. Specifically, Samsung argued that amendments adding subject matter from Chu ’886 to an application in the challenged patent’s priority chain introduced new matter and that the ’882 application “did not properly incorporate the subject matter of Chu ’886” in the following *inter partes* review proceedings:

(1) *Samsung Electronics Co., Ltd. v. ACQIS LLC*, IPR2021-00604, Paper 1 at 9−18;

(2) *Samsung Electronics Co., Ltd. v. ACQIS LLC*, IPR2021-00605, Paper 1 at 9−17;

(3) *Samsung Electronics Co., Ltd. v. ACQIS LLC*, IPR2021-00606, Paper 1 at 8−17;

(4) *Samsung Electronics Co., Ltd. v. ACQIS LLC*, IPR2021-00607, Paper 1 at 9−17; and

(5) *Samsung Electronics Co., Ltd. v. ACQIS LLC*, IPR2021-00608, Paper 1 at 10−17.

Upon consideration of Samsung's arguments, the panel in each of the above proceedings denied Samsung's petition under § 325(d). *See, e.g.*, *Samsung Electronics Co., Ltd. v. ACQIS LLC*, IPR2021-00604, Paper 7 at 21 (PTAB Aug. 9, 2021). The panel explained that the same or substantially the same arguments previously were presented to the Office, and Samsung failed to show that the Examiner erred in entering the amendments or in determining that the '882 application incorporated by reference Chu '886. *See, e.g.*, *id.* at 6−21.

For the foregoing reasons, we determine that the Petition presents substantially the same arguments that previously were presented to the Office.

2. Whether the petitioner has demonstrated that the Office erred in a manner material to the patentability of challenged claims

Because the first part of the *Advanced Bionics* framework is satisfied, we next determine whether Petitioner has demonstrated that the Office erred in a manner material to the patentability of the challenged claims. *Advanced Bionics*, Paper 6 at 8. "If reasonable minds can disagree regarding the purported treatment of the art or arguments, it cannot be said that the Office erred in a manner material to patentability. At bottom, this framework

reflects a commitment to defer to previous Office evaluations of the evidence of record unless material error is shown." *Id.* at 9.

As discussed above, Petitioner argues that the '359 patent is not entitled to a priority date before April 15, 2011, because the '436 patent's parent applications did not properly incorporate by reference Chu '886, and thus the amendments adding subject matter from Chu '886 introduced new matter. Pet. 21−34. Petitioner does not dispute that the '758 application (the initial parent application) incorporated by reference the '882 application. *Id.* at 27−28; Ex. 1013, 4:50−53. Petitioner also does not dispute that each subsequent application in the priority chain identified each preceding application as required by 35 U.S.C. § 120, and incorporated by reference the prior applications and the '882 application. *See, e.g.*, Ex. 1001, 1:12−28, 9:36−39; Ex. 1008, 1:12−27, 9:26−29. Petitioner argues only that the '882 application "never incorporated by reference" Chu '886. Pet. 27−34. Thus, under the second part of the *Advanced Bionics* framework, Petitioner must show that the Examiner erred in determining that the '882 application incorporated by reference Chu '886.

a. Incorporation by reference of Chu '886

To support its argument that the '882 application does not incorporate by reference Chu '886, Petitioner contends that the transmittal form filed in the '882 application does not identify Chu '886. *Id.* at 30−31. The transmittal form is reproduced below with Petitioner's annotations. *Id.* at 31; Ex. 1011, 81.

APPLICATION ELEMENTS
See MPEP chapter 600 concerning utility patent application contents.

ADDRESS TO: **Assistant Commissioner for Patents**
Box Patent Application
Washington, DC 20231

1. [X] Fee Transmittal Form
(Submit an original, and a duplicate for fee processing)
2. [X] Specification [*Total Pages* 45]
(preferred arrangement set forth below)
- Descriptive title of the Invention
- Cross References to Related Applications
- Statement Regarding Fed sponsored R & D
- Reference to Microfiche Appendix
- Background of the Invention
- Brief Summary of the Invention
- Brief Description of the Drawings *(if filed)*
- Detailed Description
- Claim(s)
- Abstract of the Disclosure

3. * [X] Drawing(s) *(35 USC 113)* [*Total Sheets* 57]
4. * [ ] Oath or Declaration [*Total Pages*]
a. [ ] Newly executed (original or copy)
b. [ ] Copy from a prior application (37 CFR 1.63(d)
(for continuation/divisional with Box 17 completed)
[Note Box 5 below]
i. [ ] DELETION OF INVENTOR(S)
Signed statement attached deleting inventor(s) named in the prior application, see 37 CFR 1.63(d)(2) and 1.33(b)

5. [X] Incorporation By Reference *(useable if Box 4b is checked)*
The entire disclosure of the prior application, from which a copy of the oath or declaration is supplied under Box 4b, is considered as being part of the disclosure of the accompanying application and is hereby incorporated by reference therein.

6.* [ ] Microfiche Computer Program *(Appendix)*
7.* Nucleotide and/or Amino Acid Sequence Submission
(if applicable, all necessary)
a. [ ] Computer Readable Copy
b. [ ] Paper Copy (identical to computer copy)
c. [ ] Statement verifying identity of above copies

ACCOMPANYING APPLICATION PARTS

8.* [ ] Assignment Papers (cover sheet & document(s))
9.* [ ] 37 CFR 3.73(b) Statement *(when there is an assignee)* [ ] Power of Attorney
10.* [ ] English Translation Document *(if applicable)*
11.* [ ] Information Disclosure Statement (IDS)/PTO-1449 [ ] Copies of IDS Citations
12.* [ ] Preliminary Amendment
13. [X] Return Receipt Postcard (MPEP 503) *(Should be specifically itemized)*
14.* [ ] Small Entity Statement(s) [ ] Statement filed in prior application, Status still proper and desired
15.* [ ] Certified Copy of Priority Document(s) *(if foreign priority is claimed)*
16.* [ ] .....

17. If a CONTINUING APPLICATION, *check appropriate box and supply the requisite information:*
[ ] Continuation [ ] Divisional [ ] Continuation-in-part (CIP) of prior application No: _____

The above annotated figure shows the transmittal form filed in the ’882 application. Pet. 31; Ex. 1011, 81. Petitioner argues that nothing in the transmittal form above identifies “with ***detailed particularity*** what specific material” the ’882 application incorporates by reference. Pet. 31 (quoting *Hollmer v. Harari*, 681 F.3d, 1351, 1357 (Fed. Cir. 2012) (“*Hollmer*”); citing Ex. 1002 ¶ 95). Petitioner also asserts that “[B]ox 5 titled ‘Incorporation By Reference’ states that it is only ‘useable if Box 4b is checked[,]’ but . . . Box 4b is not even checked,” and that “[e]ven if Box 4b were checked, Box 4b would have been inoperative because its use was limited ‘for continuation/divisional with [B]ox 17 completed.’” *Id.* at 31 n.6.

Petitioner's arguments and Dr. John Kubiatowicz's testimony focus on the transmittal form alone. *Id.* at 30−31; Ex. 1002 ¶ 95. But, in *Hollmer,* the Federal Circuit explained that an incorporation by reference analysis includes "the four corners of the application," and thus is not limited to the transmittal form. *Hollmer*, 681 F.3d at 1358. Further, the facts in this case are distinguishable from the facts in *Hollmer*. *Hollmer* involved intervening applications that identified a referenced application with the title of the invention and the language "*filed on the same day as the present application*," but the intervening applications were not "filed on the same day" as the referenced application and at least two other applications by the same inventors had the same title as that referenced application. *Id.* at 1353, 1358. Therefore, the Federal Circuit held that the incorporation language in *Hollmer* did not directly lead one of ordinary skill in the art to that referenced application, but rather presented several potential documents for incorporation. *Id.* at 1358.

Unlike *Hollmer*, the '882 application here provided an incorporation by reference statement of the applicant's prior applications in the transmittal form and clearly identified the applicant's prior applications (including Chu '886) in the first sentence of the Specification. In particular, the '882 application included a transmittal form with the following "Incorporation By Reference" box checked:

> Incorporation By Reference (useable if Box 4b is checked)
> *The entire disclosure of the prior application*, from which a copy of the oath or declaration is supplied under Box 4b, is considered as being part of the disclosure of the accompanying application and *is hereby incorporated by reference therein*.

Ex. 1011, 81 (emphases added). This checked box on the transmittal form shows that the applicant intended to incorporate by reference the prior applications, in their entirety, when filing the '882 application. *Id.*

The applicant also clearly identified the prior applications in the '882 application. Notably, the first sentence of the Specification of the '882 application states that "[t]his application claims any and all benefits as provided by law of U.S. Provisional Application No. 60/083,886 filed May 1, 1998" (Chu '886) "and of U.S. Provisional Application No. 60/092,706 filed on July 14, 1998." *Id.* at 83. The Office accepted the benefit claim to these two prior applications (including Chu '886) by placing them on the file wrapper cover of the '882 application, and the Examiner verified them by initialing the file wrapper cover. *Id.* at 78. Moreover, the "Cross-Reference to Related Applications" Section of the '882 application listed only these two prior applications and another concurrently-filed application. *Id.* at 83.

A reasonably skilled artisan would have recognized that the applicant intended to incorporate the prior applications (including Chu '886) at the time of filing the '882 application. The incorporation by reference language together with the benefit claims in the first sentence of the Specification of the '882 application would have sufficiently identified the applicant's prior applications (including Chu '886) as the referenced prior applications, distinguishing them from all other documents.

A reasonably skilled artisan also would not have ignored the applicant's incorporation by reference statement just because the applicant did not check Box 4b or because the applicant did not file a continuation or divisional application. As the Federal Circuit explained, "[t]he incorporation standard relies only on the reasonably skilled artisan and his or her ability to

deduce from language, however imprecise, what a host document aims to incorporate." *Husky Injection Molding Sys. Ltd. v. Athena Automation Ltd.*, 838 F.3d 1236, 1248 (Fed. Cir. 2016) (citing *Harari v. Lee*, 656 F.3d 1331, 1331 (Fed. Cir. 2011); *Advanced Display Sys., Inc. v. Kent State Univ.*, 212 F.3d 1272, 1283 (Fed. Cir. 2000)); *In re Fouche*, 439 F.2d 1237, 1239 (CCPA 1971) ("It seems amply clear that an applicant should be permitted to incorporate the disclosure of a copending application . . . so long as the reference application is sufficiently well identified to distinguish it from all others.").

Further, the evidence of record shows that two different Examiners on three separate occasions considered the transmittal form together with the benefit claims and recognized that the applicant incorporated by reference Chu '886, including:

(1) when the applicant filed a preliminary amendment in the '912 application that added Figures 8 and 9 and corresponding disclosure from Chu '886 as Figures 8A and 8B and corresponding disclosure in the '912 application, in which the applicant directed the Examiner to the transmittal form in the '882 application as support for the amendment (Ex. 1009, 26);

(2) when the applicant filed another amendment on December 16, 2011, in the '912 application that added Figures 10 and 16 and corresponding disclosure from Chu '886 as Figures 8C and 24 and corresponding disclosure in the '912 application, in which the applicant also directed the Examiner to the transmittal form in the '882 application as support for this amendment (*id.* at 392); and

(3) when the applicant filed a similar amendment in U.S. Application No. 12/561,138, as part of a separate priority chain of six reissue

applications of U.S. Patent No. 6,643,777 B1 ("the '777 patent"), directing the Examiner to the transmittal form in the '882 application as support for the amendment (Ex. 2003, 363, 446).

The Examiner in each of these cases did not object to the amendments as new matter or issue a rejection under 35 U.S.C. § 112, ¶ 1, for lack of written description support for the claims. *See* Ex. 1009, 430; Ex. 2003, 446. Instead, the Examiner entered the amendments and subsequently allowed the applications with the subject matter added from Chu '886. Ex. 1009, 430; Ex. 2003, 446.

The incorporation by reference statement in the transmittal form also was never objected to by any Examiner during prosecution of the '882 application, the '758 application (initial parent application), and all the continuation applications in the priority chain of the '359 patent, as well as the '777 patent and all the reissue applications in the priority chain of the '777 patent, as noted in *Samsung Electronics Co., Ltd. v. ACQIS LLC*, IPR2021-00607, Paper 7 at 20–21 (PTAB Oct. 7, 2021). Moreover, none of the Examiners required the applicant to change its benefit claims from "continuation" to "continuation-in-part" in those continuation applications.

For the reasons discussed above, the '882 application identified Chu '886 with particularity and would have directly led an ordinarily skilled artisan to the document intended to be incorporated. Accordingly, we determine that Petitioner fails to show that the Examiner erred in determining that the '882 application (issued as Chu '330) incorporated Chu '886 by reference.

b. Transmittal form

Petitioner argues that "[e]ven if the transmittal form of [the '882 application] included a statement that purportedly incorporated by reference [Chu '886] . . . that statement would be inoperative because a person of ordinary skill's analysis of what a patent incorporates is limited to *the four corners of the patent itself*." Pet. 32 (emphasis added). According to Petitioner, a person of ordinary skill in the art "would not have known if a patent incorporates another document based on *a statement buried in a transmittal form*." *Id.* 32–33 (emphasis added).

We disagree. An incorporation by reference analysis includes "the four corners of the *application*." *Hollmer*, 681 F.3d at 1358 (emphasis added). And a transmittal form is a part of an application. 37 C.F.R. § 1.77(a) (1998) ("The elements of the application, if applicable, should appear in the following order: (1) Utility Application Transmittal Form . . . ."). In fact, the Federal Circuit and other courts have considered a transmittal form in an incorporation by reference analysis. *See, e.g.*, *Harari v. Hollmer*, 602 F.3d 1348, 1352−53 (Fed. Cir. 2010) ("*Harari I*"); *Hollmer*, 681 F.3d at 1353−54; *Pregis Corp. v. Doll*, 698 F. Supp. 2d 584, 598−599 (E.D. Va. 2010). Moreover, Petitioner admits that an applicant filing a continuation or divisional application could have used the USPTO transmittal form, which includes a check box for incorporating by reference a prior application. Pet. 31 n.6.

c. Priority claim

Petitioner argues that the statement "***[t]his application claims any and all <u>benefits</u> as provided by law*** of U.S. Provisional Application No. ***60/083,886*** filed May 1, 1998" that appears in the '882 application "is at

best a priority claim to [Chu '886] that is distinct from an incorporation by reference claim." Pet. 33 (citing *In re de Seversky*, 474 F.2d 671, 674 (CCPA 1973) ("[A] mere *reference* to another application, or patent, or publication is not an *incorporation* of anything therein into the application.")).

Petitioner's reliance on *de Seversky* is misplaced. In *de Seversky*, "the parent application . . . contain[ed] no 'incorporation-by-reference' language whatsoever." *de Seversky*, 474 F.2d at 674. In contrast, the applicant here filed a transmittal form in the '882 application that includes an incorporation by reference statement of the prior applications. Ex. 1011, 81. Petitioner's argument fails to consider this incorporation by reference statement together with the benefit claims in the first sentence of the Specification that clearly identifies the applicant's prior applications (including Chu '886). *Id.* at 81, 83. As discussed above, the incorporation by reference language together with the benefit claims in the first sentence of the Specification of the '882 application would have sufficiently identified the applicant's prior applications (including Chu '886) as the referenced prior applications. In short, the '882 application identified Chu '886 with particularity and would have directly led a reasonably skilled artisan to the document intended to be incorporated.

d. Incorporation by reference standard

Petitioner argues that "[t]he reasonable examiner standard does not apply to the analysis of the '359 Patent's priority chain because these patents have issued." Pet. 29 n.5 (citing *Harari I*, 602 F.3d at 1348; *Hollmer*, 681 F.3d at 1356). According to Petitioner, "[t]he incorporation by reference is proper only if the host document 'identif[ies] ***with detailed particularity***

what specific material it incorporates ***to a person of ordinary skill***' and 'directly lead[s]' a POSITA to the document . . . intended to be incorporated." *Id.* at 29 (quoting *Hollmer*, 681 F.3d at 1357).

We are not persuaded by Petitioner's argument. As discussed above, Petitioner has the burden to show that the Examiner erred in determining that the '882 application incorporated by reference Chu '886. Under *Advanced Bionics*, "[i]f reasonable minds can disagree regarding the purported treatment of the art or arguments, it cannot be said that the Office erred in a manner material to patentability. At bottom, this framework reflects a commitment to defer to previous Office evaluations of the evidence of record unless material error is shown." *Advanced Bionics*, Paper 6 at 9. But Petitioner does not provide any meaningful differences between applying the "reasonable examiner" standard and applying the "POSITA" standard to the particular facts in this proceeding under the *Advanced Bionics* framework. *See* Pet. 28–34; Reply 1–3.

In any event, even applying the "POSITA" standard here, we find that Petitioner fails to show that the Examiner erred in determining that the '882 application incorporated Chu '886 by reference. As discussed above, unlike *Hollmer* where the incorporation language did not directly lead one of ordinary skill in the art to the referenced application because it presented several potential documents for incorporation, the '882 application provided an incorporation by reference statement of the applicant's prior applications and clearly identified the applicant's prior applications (including Chu '886) in the first sentence of the Specification. *See* Section II.A.2.a.

The incorporation by reference language together with the benefit claims in the first sentence of the Specification of the '882 application would

have sufficiently identified the applicant's prior provisional applications (including Chu '886) as the referenced prior applications. *See Husky Injection*, 838 F.3d at 1248. In short, the '882 application identified Chu '886 with particularity and would have directly led an ordinarily skilled artisan to the document intended to be incorporated. *Hollmer*, 681 F.3d at 1357−58.

Accordingly, even under the "POSITA" standard, we find that Petitioner fails to show that the Examiner erred in determining that the '882 application (issued as Chu '330) incorporated Chu '886 by reference.

3. Summary

We determine, on this record, that substantially the same arguments previously were presented to the Office. Further, we also disagree with Petitioner that the Office's purported treatment of the arguments were unreasonable. As set forth under *Advanced Bionics*, if reasonable minds can disagree regarding the purported treatment of the art or arguments, it cannot be said that the Office erred in a manner material to the patentability of challenged claims. As a result, we exercise our discretion under § 325(d) to deny the Petition in this case.

III. CONCLUSION

For the foregoing reasons, we exercise our discretion under § 325(d) to deny the Petition.

IV. ORDER

It is hereby

ORDERED that the Petition is denied, and no trial is instituted.

UNITED STATES PATENT AND TRADEMARK OFFICE

BEFORE THE PATENT TRIAL AND APPEAL BOARD

INTEL CORPORATION,
Petitioner,

v.

ACQIS LLC,
Patent Owner.

IPR2021-01095
Patent 8,756,359 B2

Before THU A. DANG, JONI Y. CHANG, and
ROBERT J. WEINSCHENK, *Administrative Patent Judges*.

WEINSCHENK, *Administrative Patent Judge*, dissenting.

I respectfully dissent from the majority's decision denying institution of an *inter partes* review. I am not persuaded, on this record, that the '882 application identifies "with detailed particularity" that it incorporates by reference Chu '886. *See Hollmer v. Harari*, 681 F.3d 1351, 1357 (Fed. Cir. 2012).

The '882 application's transmittal form states that for a "continuation/divisional," an applicant may check Box 4b and provide a copy of an oath or declaration "from a prior application." Ex. 1011, 81. The applicant must also complete Box 17 by providing the application number of

the "prior application." *Id.* ("with Box 17 completed"). If an applicant checks Box 4b and completes Box 17, the applicant may check Box 5 to incorporate by reference "[t]he entire disclosure of the prior application, from which a copy of the oath or declaration is supplied under Box 4b." *Id.* ("useable if Box 4b is checked"). In the '882 application, the applicant checked Box 5, but did not check Box 4b or provide a copy of an oath or declaration from the prior application that purportedly is incorporated by reference. *See id.* The applicant also did not identify in Box 17 the prior application that purportedly is incorporated by reference. *See id.*

I recognize that the first page of the '882 application's specification claims the benefit of Chu '886. *Id.* at 83. But Boxes 4b and 5 on the transmittal form are for use with a "continuation/divisional" application and only incorporate by reference "the prior application, from which a copy of the oath or declaration is supplied." *Id.* at 81. The '882 application is not a continuation or divisional of Chu '886, and the applicant did not provide a copy of an oath or declaration from Chu '886.[1] *See* Ex. 1003, code (60); Ex. 1011, 81. Thus, in my view, the incorporation by reference statement in the '882 application's transmittal form is ambiguous and does not "directly

[1] Because the '882 application is not a continuation or divisional of Chu '886, I question whether this particular transmittal form can be used to incorporate by reference Chu '886. *See* MPEP § 201.06(c) (9th ed. rev. 10.2019 June 2020) ("Note that for applications filed prior to September 21, 2004, if applicants used a former version of the transmittal letter form provided by the USPTO, the incorporation by reference statement could only be relied upon to add inadvertently omitted material to the *continuation or divisional* application.") (emphasis added); MPEP § 201.06(c) (7th ed. July 1998) ("The inclusion of this incorporation by reference . . . will permit an applicant to amend the *continuing* application to include any subject matter in such prior application(s).") (emphasis added).

lead" a person of ordinary skill in the art to Chu '886. *See Hollmer*, 681 F.3d at 1358 ("[P]atent draftsmanship is an exacting art, and no less care is required in drafting an incorporation by reference statement than in any other aspect of a patent application.").

As a result, even if substantially the same argument previously was presented to the Office, I believe Petitioner shows sufficiently that the Office erred in a manner material to patentability. For that reason, I would not exercise discretion under 35 U.S.C. § 325(d) to deny the Petition.[2]

[2] I previously joined the majority in IPR2021-01099 that denied institution under § 325(d) for similar reasons as the majority in this case. *Intel Corp. v. ACQIS LLC*, IPR2021-01099, Paper 9 at 6–24 (PTAB Dec. 2, 2021). I note that, in that case, Petitioner filed a request for rehearing that currently is pending.

For PETITIONER:

Yung-Hoon Ha
Theodoros Konstantakopoulos
Christian Dorman
DESMARAIS LLP
yha@desmaraisllp.com
tkonstantakopoulos@desmaraisllp.com
cdorman@desmaraisllp.com

For PATENT OWNER:

Mark Miller
Gina Cornelio
Case Collard
DORSEY & WHITNEY LLP
miller.mark@dorsey.com
cornelio.gina@dorsey.com
collard.case@dorsey.com