Trials@uspto.gov
571-272-7822

Paper 7
Date: February 16, 2021

UNITED STATES PATENT AND TRADEMARK OFFICE

BEFORE THE PATENT TRIAL AND APPEAL BOARD

TCT MOBILE (US) INC.,
HUIZHOU TCL MOBILE COMMUNICATION CO. LTD., and
SHENZHEN TCL CREATIVE CLOUD TECHNOLOGY CO., LTD.,
Petitioner,

v.

ANCORA TECHNOLOGIES, INC.,
Patent Owner.

IPR2020-01609
Patent 6,411,941 B1

Before THU A. DANG, JONI Y. CHANG, and KEVIN W. CHERRY, *Administrative Patent Judges*.

CHANG, *Administrative Patent Judge.*

DECISION
Granting Institution of *Inter Partes* Review
35 U.S.C. § 314

I. INTRODUCTION

TCT Mobile (US) Inc., Huizhou TCL Mobile Communication Co., Ltd., and Shenzhen TCL Creative Cloud Technology Co., Ltd. (collectively, "Petitioners") filed a Petition requesting an *inter partes* review ("IPR") of claims 1−3, 6−14, and 16 ("the challenged claims") of U.S. Patent No. 6,411,941 B1 (Ex. 1001, "the '941 patent"). Paper 1 ("Pet."), 1. Ancora Technologies, Inc. ("Patent Owner") filed a Preliminary Response (Paper 7, "Prelim. Resp.").

Under 35 U.S.C. § 314(a), an *inter partes* review may not be instituted unless the information presented in the petition "shows that there is a reasonable likelihood that the petitioner would prevail with respect to at least 1 of the claims challenged in the petition." For the reasons stated below, we determine that Petitioner has established a reasonable likelihood that it would prevail with respect to at least one claim. We hereby institute an *inter partes* review as to all of the challenged claims of the '941 patent and all of the asserted grounds of unpatentability.

A. Related Matters

The parties indicate that the '941 patent is involved in the following proceedings: *Ancora Technologies, Inc. v. TCT Mobile (US) Inc.*, 2:20-cv-01252 (C.D. Cal.); *Ancora Technologies, Inc. v. Lenovo Group Limited*, No. 1:19-cv-01712 (D. Del.); *Ancora Technologies, Inc. v. Sony Corp.*, No. 1:19-cv-01703 (D. Del.); *Ancora Technologies, Inc. v. LG Electronics, Inc.*, No. 1:20-cv-00034 (W.D. Tex.); *Ancora Technologies, Inc. v. Samsung Electronics Co., Ltd.*, No. 6:19-cv-00385 (W.D. Tex.); *Ancora Technologies,*

Nintendo - Ancora Exh. 1016

Inc. v. HTC America, Inc., No. 2:16-cv-01919 (W.D. Wash.); and *Samsung Electronics Co., Ltd. v. Ancora Technologies, Inc.*, IPR2020-01184 (PTAB). Pet. 1; Paper 5, 1−2. The ’941 patent also was involved in *ex parte* Reexamination No. 90/010,560. Ex. 1001, 8−9 (*Ex Parte* Reexamination Certificate issued on June 1, 2010, confirming the patentability of claims 1−19 and indicating that no amendments have been made to the patent).

B. The ’941 patent

The ’941 patent discloses a method of restricting software operation within a license limitation that is applicable for a computer having a first non-volatile memory area, a second non-volatile memory area, and a volatile memory area. Ex. 1001, code (57). According to the ’941 patent, the method includes the steps of selecting a program residing in the volatile memory, setting up a verification structure in the non-volatile memories, verifying the program using the structure, and acting on the program according to the verification. *Id.*

Figure 1 of the ’941 patent is reproduced below.

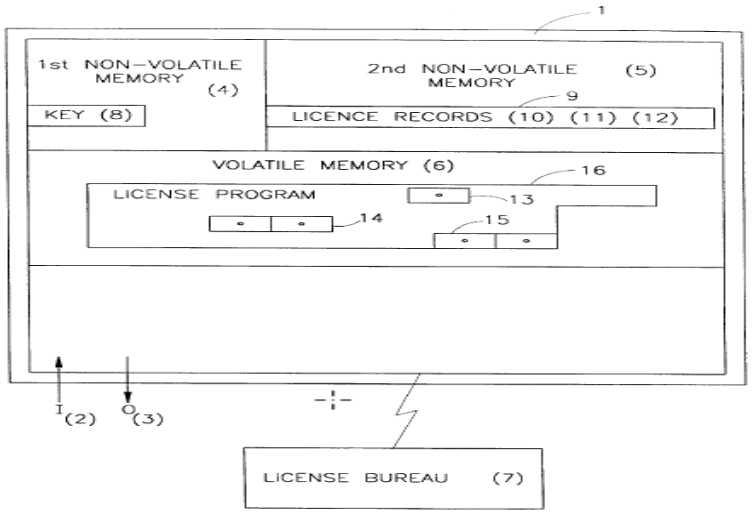

Nintendo - Ancora Exh. 1016

Figure 1 above shows a schematic diagram of computer processor 1 and license bureau 7. *Id*. at 5:9−19. Computer processor 1 is associated with input operations 2 and output operations 3. *Id*. Computer processor 1 contains first non-volatile memory area 4 (e.g., the ROM section of the Basic Input / Output System ("BIOS")), second non-volatile memory area 5 (e.g., the E^2PROM section of the BIOS), and volatile memory area 6 (e.g., the internal RAM memory of the computer). *Id*.

C. Illustrative Claim

Of the challenged claims, only claim 1 is independent. Claims 2, 3, 6−14, and 16 directly or indirectly depend from claim 1. Claim 1 is illustrative:

> 1. A method of restricting software operation within a license for use with a computer including an erasable, non-volatile memory area of a BIOS of the computer, and a volatile memory area; the method comprising the steps of:
>
> selecting a program residing in the volatile memory,
>
> using an agent to set up *a verification structure in the erasable, non-volatile memory of the BIOS, the verification structure accommodating data that includes at least one license record*,
>
> verifying the program using at least the verification structure from the erasable non-volatile memory of the BIOS, and
>
> acting on the program according to the verification.

Ex. 1001, 6:59:67–7:4 (emphasis added).

Nintendo - Ancora Exh. 1016

1. Prior Art Relied Upon

Petitioner relies upon the references listed below (Pet. 5):

Reference	Date	Exhibit No.
Hellman	Apr. 14, 1987	Ex. 1004
Chou	Apr. 6, 1999	Ex. 1005
Schneck	Aug. 3, 1999	Ex. 1006

2. Asserted Grounds of Unpatentability

Petitioner asserts the following grounds of unpatentability (Pet. 6):

Claims Challenged	35 U.S.C. §	References
1, 2, 11, 13	103(a)	Hellman, Chou
1−3, 6−14, 16	103(a)	Hellman, Chou, Schneck

II. ANALYSIS

A. Claim Construction

In an *inter partes* review, we construe a patent claim "using the same claim construction standard that would be used to construe the claim in a civil action under 35 U.S.C. § 282(b)." 37 C.F.R. § 42.100(b) (2019). Under this standard, the words of a claim are generally given their "ordinary and customary meaning," which is the meaning the term would have to a person of ordinary skill at the time of the invention, in the context of the

Nintendo - Ancora Exh. 1016

entire patent including the specification. *See Phillips v. AWH Corp.*, 415 F.3d 1303, 1312–13 (Fed. Cir. 2005) (en banc).

Petitioner asserts that the claims of the '941 patent have been construed by several courts, and it does not believe that any claim construction are needed for the purposes of this review. Pet. 20−21 (citing Exs. 1011−1014). Patent Owner asserts that those district court constructions should be adopted for this proceeding and that all other claim terms be given their plain and ordinary meaning. Prelim. Resp. 6.

In light of the parties' arguments and supporting evidence in this preliminary record, we find that it is necessary to construe only the claim term "license record" expressly for purposes of this Institution Decision. *See Nidec Motor Corp. v. Zhongshan Broad Ocean Motor Co.*, 868 F.3d 1013, 1017 (Fed. Cir. 2017) (quoting *Vivid Techs., Inc. v. Am. Sci. & Eng'g, Inc.*, 200 F.3d 795, 803 (Fed. Cir. 1999)) (noting that "we need only construe terms 'that are in controversy, and only to the extent necessary to resolve the controversy'").

"license record"

Claim 1 recites "using an agent to set up a verification structure in the erasable, non-volatile memory of the BIOS, the verification structure accommodating data that includes at least one *license record*." Ex. 1001, 6:64−67 (emphasis added).

In its Preliminary Response, Patent Owner argues that the term "license record" should be construed as "a record *from a licensed program* with information for *verifying that licensed program*," suggesting that a

Nintendo - Ancora Exh. 1016

"license record" is required to be *formed from* a licensed program. Prelim. Resp. 16−18. Patent Owner relies on the District Court's claim construction order entered in *Ancora Technologies, Inc. v. Apple Inc.*, No. 11:cv-06357 (N.D. Cal.) ("*Ancora v. Apple*") (Ex. 1011, 16−18) and the District Court's claim construction order entered in *Ancora Technologies, Inc. v. TCT Mobile (US), Inc.*, No. 1902192-GW-ADSx (C.D. Cal.) ("*Ancora v. TCT Mobile*") (Ex. 2002, 9−11), for support. Prelim. Resp. 16.

Based on the evidence in the present record, we decline to adopt Patent Owner's proposed claim construction because it would improperly import a limitation from a preferred embodiment disclosed in the Specification into the claims. The United States Court of Appeal for the Federal Circuit "has repeatedly cautioned against limiting the claimed invention to preferred embodiments or specific examples in the specification." *Williamson v. Citrix Online, LLC*, 792 F.3d 1339, 1346–47 (Fed. Cir. 2015). Significantly, "it is the *claims*, not the written description, which define the scope of the patent right." *Id*. at 1346.

A claim term should be given its ordinary meaning in the pertinent context, unless the patentee has made clear its adoption of a different definition or otherwise disclaimed that meaning. *See, e.g.*, *Thorner v. Sony Computer Entm't Am. LLC*, 669 F.3d 1362, 1365 (Fed. Cir. 2012). Here, as the District Court explained in *Ancora v. Apple*, "[n]either the claim nor the specification [of the '941 patent] defines 'license record.'" Ex. 1011, 17. Patent Owner does not explain why the plain and ordinary meaning of the term "license record," in the context of the '941 patent, requires a "license record" to be *formed from* a licensed program. Prelim. Resp. 16−18.

Nintendo - Ancora Exh. 1016

The Specification does not support Patent Owner's position that a "license record" is required to be formed from a licensed program. The Specification expressly discloses that "according to the invention, each application program that is to be licensed to run on the specified computer, *is associated with a license record*." Ex. 1001, 1:53−55 (emphasis added). A license record "consists of author name, program name and number of licensed users (for network)." *Id.* at 1:55−57. As the District Court explained in *Ancora v. TCT Mobile*, the Specification shows that "[t]he license record *may* be formed from fields or contends of the licensed program," but it is not required to. Ex. 2002, 9 (citing Ex. 1001, 5:46−51, 6:7−10) (emphasis added).

Only in the "Detailed Description of a Preferred Embodiment" section, the Specification describes "the licensed-software-program includes contents used to form a license-record." Ex. 1001, 5:25−29, 6:7−10. Notably, claim 1 itself does not recite such a requirement. Therefore, adopting Patent Owner's proposed claim construction would improperly import a limitation from a preferred embodiment into the claim. *Williamson*, 792 F.3d at 1346−47.

Furthermore, Patent Owner's reliance on the District Court's claim construction order in *Ancora v. Apple* (Ex. 1011, 16−18) is misplaced. Prelim. Resp. 16. The District Court in *Ancora v. Apple* did not address the issue of whether a "license record" is required to be formed from a licensed program. Ex. 1011, 16−18. The District Court was merely resolving the issue of "whether the term 'license record' is a record that identifies the licensed program and the number of licensed user, as Apple urges, or more

Nintendo - Ancora Exh. 1016

broadly, information for verifying a licensed program, as Ancora contends." *Id.* at 16−18. Therefore, Patent Owner's reliance on the District Court's claim construction order in *Ancora v. Apple* is misplaced.

Also Patent Owner's reliance on the District Court's claim construction order in *Ancora v. TCT Mobile* is misplaced, as the District Court in that case was resolving the issue of "whether a license record requires 'information indicating a right to use the program' or just information for verifying the program." Ex. 2002, 9. Contrary to Patent Owner's proposed claim construction that requires a "license record" to be formed from a licensed program, the District Court in *Ancora v. TCT Mobile* made clear that "[t]he license record *may* be formed from fields or contents of the licensed program," but it is not required to. *Id.* at 9 (citing Ex. 1001, 5:46−51; 6:7−10). Therefore, Patent Owner's reliance on the District Court's claim construction order in *Ancora v. TCT Mobile* is misplaced.

In light of the claim language, the Specification, and the evidence in this present record, we determine that a "license record" associated with a licensed program is "a record having information for verifying that licensed program" for purposes of this Decision. And we decline to adopt Patent Owner's proposed construction that requires a "license record" to be formed from a licensed program.

B. Principles of Law

A patent claim is unpatentable under 35 U.S.C. § 103(a) if the differences between the claimed subject matter and the prior art are such that the subject matter, as a whole, would have been obvious at the time the

Nintendo - Ancora Exh. 1016

invention was made to a person having ordinary skill in the art to which said subject matter pertains. *KSR Int'l Co. v. Teleflex Inc.*, 550 U.S. 398, 406 (2007). The question of obviousness is resolved on the basis of underlying factual determinations including (1) the scope and content of the prior art; (2) any differences between the claimed subject matter and the prior art; (3) the level of ordinary skill in the art; and (4) when in evidence, objective indicia of nonobviousness.[1] *See Graham v. John Deere Co.*, 383 U.S. 1, 17–18 (1966).

C. Level of Ordinary Skill in the Art

In determining the level of ordinary skill in the art, various factors may be considered, including the "type of problems encountered in the art; prior art solutions to those problems; rapidity with which innovations are made; sophistication of the technology; and educational level of active workers in the field." *In re GPAC, Inc.*, 57 F.3d 1573, 1579 (Fed. Cir. 1995) (quotation marks omitted).

Here, Petitioner asserts that a person of ordinary skill in the art in the context of the '941 patent "would have had been at least a B.S. degree in computer science, computer engineering, or electrical engineering (or equivalent experience)" and "at least two years of experience with computer science and computer engineering, including information encryption, computer architecture, and firmware programming," citing to the declaration

[1] Neither party presents evidence or arguments regarding objective evidence of nonobviousness in the instant proceeding at this time.

Nintendo - Ancora Exh. 1016

of Andrew Wolfe, Ph.D., for support. Pet. 21 (citing Ex. 1003 ¶¶ 21–25). At this juncture, Patent Owner does not dispute that assessment. *See generally* Prelim. Resp.

For purposes of this Decision, we adopt the level of ordinary skill as articulated by Petitioner because, based on the current record, this proposal appears to be consistent with the '941 patent, the asserted prior art, and supported by the testimony of Dr. Wolfe.

D. Overview of the Asserted Prior Art

Hellman (Exhibit 1004)

Hellman discloses a method and an apparatus in which use of a software package can be authorized for a particular base unit a specific number of times. Ex. 1004, 4:37–40. Figure 1 of Hellman is reproduced below:

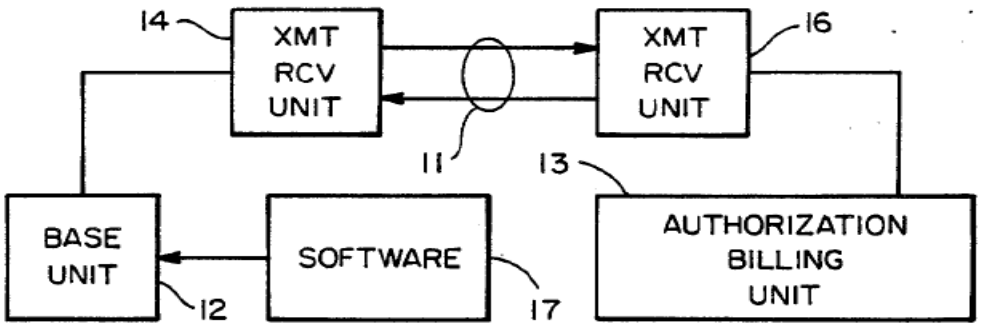

Figure 1 above illustrates a block diagram of a pay-per-use software control system. *Id.* at 5:1–2. Base unit 12 communicates with authorization and billing unit 13 over an insecure communication channel 11, using transmitter-receiver units 14, 16. *Id.* at 5:39–42. The user at base unit 12 obtains software package 17 by purchasing it and requests for software use.

Nintendo - Ancora Exh. 1016

Id. at 5:51−59. Authorization and billing unit 13 receives the user's request, generates authorization A for unit 12 to use software package 17 an additional N times, and sends authorization A to base unit 12. *Id.* at 6:3−8.

Figure 8 of Hellman is reproduced below.

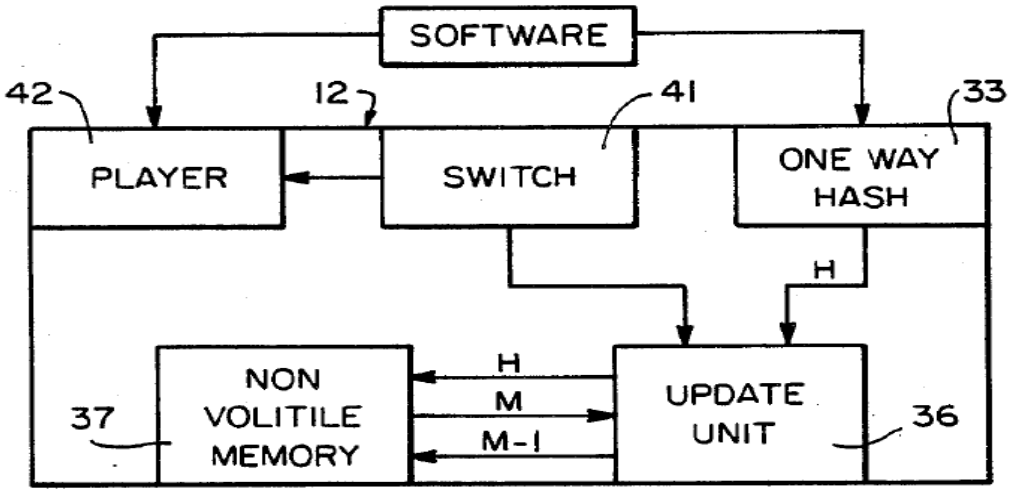

Figure 8 above depicts an implementation of base unit 12 during use of a software package. *Id.* at 10:33−34. Software package 17 is connected to base unit 12 and a signal representing software package 17 is operated on by one-way hash function generator 33 to produce an output signal which represents hash value H. *Id.* at 10:34−38. Signal H is transmitted to update unit 36 to indicate which software package is being used. *Id.* at 10:38−40. Update unit 36 uses value H as an address to non-volatile memory 37, which responds with a signal representing M, the number of uses of software package 17 which are still available. *Id.* at 10:40−43.

If value M is greater than 0, then update unit 36 sends a control signal to switch 41 which activates software player 42, allowing it to use software package 17. *Id.* at 10:44−46. Update unit 36 also decrements M to M−1 and stores this as the new value in address H in non-volatile memory 37. *Id.* at

Nintendo - Ancora Exh. 1016

10:46−49. If M=0, then update unit 36 does not change the contents of non-volatile memory 37, but neither does it send a control signal to activate software player 42. *Id.* at 10:50−53. Thus, the user is prevented from using software package 17 for which he does not have current authorized use. *Id.* at 10:53−54.

Chou (Exhibit 1005)

Chou discloses an apparatus and a method for discouraging computer theft. Ex. 1005, code (57). Chou's invention requires that a user enters a unique word or number related to the particular computer each time the computer is powered up. *Id.* at 2:11−14. Chou discloses a security routine that is stored in the BIOS memory. *Id.* at 2:14−16. The security routine requires verification of a password entered by the user, or a verification of a quantity read from an externally connected memory device. *Id.* at 2:16−18.

Chou also discloses that, at the time of its invention, "[r]ecent changes in the computer BIOS memory storage devices permit writing data to the BIOS memory, offering the opportunity to provide password protection within the same memory which stores the BIOS routines." *Id.* at 1:63−66. And, "any attempt to delete the protection will result in the BIOS routine being disabled, disabling the boot up process." *Id.* at 1:66−2:1. "EEPROM flash devices may be programmed with BIOS routines which permit the user to enter data without requiring the computer to be returned to the manufacture." *Id.* at 2:2−4. According to Chou, its "invention makes use of these new BIOS memory devices for effecting security measures which discourage theft." *Id.* at 2:4−7.

Nintendo - Ancora Exh. 1016

Schneck (Exhibit 1006)

Schneck discloses a technique that "controls access to and use and distribution of data." Ex. 1006, 6:49−50. Schneck's technique can be used to "control how much of the software's functionality is available." *Id.* at 6:53−56. Schneck prevents the authorization to use software on one device from being used on another, unauthorized device, to address the "secondary distribution" problem. *Id.* at 2:40−67, 6:57−62.

E. Obviousness Over Hellman, Chou, and Schneck

Petitioner asserts that claims 1−2, 11, and 13 are unpatentable under § 103(a) as obvious over Hellman and Chou, and that claims 1−3, 6−14, 16 are unpatentable as obvious over Hellman, Chou, and Schneck. Pet. 21–64.

a. Claim 1

The preamble of claim 1

The preamble of claim 1 recites a "method of restricting software operation within a license for use with a computer including an erasable, non-volatile memory area of a BIOS of the computer, and a volatile memory area." Ex. 1001, 6:59−62. Petitioner asserts that, regardless of whether the preamble is limiting, the combination Hellman and Chou teaches or suggests the elements recited in the preamble of claim 1 because Hellman discloses a "method of limiting use of software within authorized uses." *Id.* (citing Ex. 1004, 9:29−10:13, 10:33−54, 10:55−65; Ex. 1003 ¶¶ 98−104). According to Petitioner, Hellman discloses a computer (base unit 12) that includes "the claimed 'erasable, non-volatile memory area of a BIOS of the

Nintendo - Ancora Exh. 1016

computer, and a volatile memory area.'" *Id.* at 33−34. Petitioner notes that Hellman's base unit 12 has temporary memory 28, e.g., RAM (Random Access Memory), and non-volatile memory 37, which could be implemented as EEPROM. *Id.* at 34 (citing Ex. 1004, 8:67−68, 10:1−4, Fig. 6; Ex. 1003 ¶¶ 98−104).

Petitioner acknowledges that Hellman does "not explicitly disclose the computer (base unit 12) had BIOS stored in memory." *Id.* at 35. Nevertheless, Petitioner points out that Chou discloses a BIOS EEPROM on a computer, and a person of ordinary skill in the art would have understood that EEPROM was a type of erasable, non-volatile memory. *Id.* (citing Ex. 1005, 1:54−2:7, 3:21−35, Figs. 1, 3, 7; Ex. 1003 ¶¶ 104−106). Petitioner argues that, in light of Chou, such an artisan would have stored both the license information and the BIOS in Hellman's erasable, non-volatile memory 37 (e.g., EEPROM). *Id.*; *see also id.* at 28−33.

Regardless of whether the preamble of claim 1 is limiting, we determine that Petitioner has shown sufficiently for purposes of this Decision that the combination of Hellman and Chou discloses the subject matter recited in the preamble of claim 1. At this juncture, Patent Owner does not make any argument regarding the preamble of claim 1. *See generally* Prelim. Resp.

"selecting a program residing in the volatile memory"

As to the limitation "selecting a program residing in the volatile memory," Petitioner argues that Hellman discloses selecting software package 17 (a computer program) residing in temporary RAM memory 28

Nintendo - Ancora Exh. 1016

(volatile memory). Pet. 35−37 (citing Ex. 1004, 5:57−61, 8:67−9:2, 9:15−28, 10:33−11:3; Ex. 1003 ¶¶ 121−129). Based on the evidence in this current record, we determine that Petitioner has shown sufficiently for purposes of this Decision that Hellman discloses the limitation "selecting a program residing in the volatile memory," as recited in claim 1. At this juncture, Patent Owner does not make any argument regarding this limitation. *See generally* Prelim. Resp.

"the verification structure accommodating data that includes at least one license record"

Claim 1 recites "using an agent to set up a verification structure in the erasable, non-volatile memory of the BIOS, the verification structure accommodating data that includes *at least one license record*" (the "license record" limitation). As discussed in our claim construction analysis above (Section II, A), we determine that a "license record" associated with a licensed program, is "a record having information for verifying that licensed program" for purposes of this Decision.

For this limitation, Petitioner asserts that Hellman discloses using update unit 36 (acting as the required "agent") to set up a verification structure in non-volatile EEPROM memory 37 (the required "erasable, non-volatile memory"). Pet. 38 (citing Ex. 1004, 10:1−4; Ex. 1003 ¶¶ 133−138). According to Petitioner, "update unit 36 sets up the required 'verification structure' in the non-volatile memory 37 at least in the form of storing the value M at a specific address H for a software program identified by that hash value H." *Id.* (citing Ex. 1003 ¶¶ 133−138). Petitioner argues

Nintendo - Ancora Exh. 1016

that "value M is the required 'license record', because it indicates the scope of authorized use—the number of uses, where 'M' is the number—for the specific software package 17 identified by hash value H." *Id.* Petitioner contends that "[s]toring the value M at the address H constitutes setting up a versification structure because it includes storing a license record at a specific license record location that corresponds to the licensed program." *Id.* (citing Ex. 1001, 1:59−62, 6:17−21; Ex. 1003 ¶¶ 133−138).

Patent Owner counters that value M in Hellman does not include any information "from a licensed program" as the District Court claim constructions require. Prelim. Resp. 16−18.

However, as discussed in our claim construction analysis above (Section II.A), we decline to adopt Patent Owner's proposed claim construction that requires a "license record" to be formed from a licensed program, as it would improperly import a limitation from a preferred embodiment into the claim. *Williamson*, 792 F.3d at 1346−47. For purposes of this Decision, we determine that a "license record" associated with a licensed program is "a record having information for verifying that licensed program." Patent Owner's reliance on the District Court claim construction orders enter in *Ancora v. Apple* and in *Ancora v. TCT Mobile* is misplaced because neither District Court claim construction order requires a "license record" to be formed from a licensed program. Ex. 1011, 16−18; Ex. 2002, 9−11. Therefore, Patent Owner's argument is unavailing at this time.

Upon consideration of the parties' contentions and evidence in this current record, we determine that Petitioner has shown adequately for purposes of this Decision that the combination of Hellman and Chou teaches

Nintendo - Ancora Exh. 1016

or suggests the aforementioned "license record" limitation as recited in claim 1.

"verifying the program using at least the verification structure from the erasable non-volatile memory of the BIOS"

Claim 1 also recites "verifying the program using at least the verification structure from the erasable non-volatile memory of the BIOS." Petitioner argues that Hellman discloses this limitation because Hellman discloses using value M (the required "license record") that is stored in non-volatile memory 37 to verify software package 17 (the required "program"). Pet. 39 (citing Ex. 1004, 10:33−54; Ex. 1003 ¶¶ 151−152). In particular, Hellman discloses that when an attempt is made to run software package 17, value H is generated and sent to update unit 36, which uses value H as an address in non-volatile memory to verify if a license exists for software package 17. Ex. 1004, 10:33−54. If a license does exist, update unit 36 retrieves the number of remaining authorized uses value M, and a determination is made as to whether the number of authorized uses is greater than zero. *Id.*

Based on the evidence in this current record, we determine that Petitioner has shown sufficiently for purposes of this Decision that Hellman discloses the limitation "selecting a program residing in the volatile memory," as recited in claim 1. At this juncture, Patent Owner does not make any argument regarding this limitation. *See generally* Prelim. Resp.

Nintendo - Ancora Exh. 1016

"acting on the program according to the verification"

Lastly, claim 1 recites "acting on the program according to the verification." Petitioner argues that Hellman discloses this limitation because it discloses allowing software package 17 to be used if a license record is found in non-volatile memory 37 and there are authorized uses remaining. Pet. 39 (citing Ex. 1004, 10:40−49; Ex. 1003 ¶¶ 154−155). Based on the evidence in this current record, we determine that Petitioner has shown sufficiently for purposes of this Decision that Hellman discloses the limitation "acting on the program according to the verification," as recited in claim 1. At this juncture, Patent Owner does not make any argument regarding this limitation. *See generally* Prelim. Resp.

Motivation to combine Hellman and Chou

Petitioner acknowledges that Hellman does not explicitly disclose that base unit 12 (a computer) has a BIOS and that non-volatile memory 37 would be used to store the BIOS for the computer. Pet. 28. Petitioner asserts that it was well-known at the time of the invention that "a computer would have BIOS and that it would be common to store it in EEPROM memory," as evidenced by Chou. *Id.* at 29 (citing Ex. 1005, 1:54−62, 2:2−7, 3:21−35; Ex. 1003 ¶¶ 105−111; Ex. 1002, 51 (Prosecution History of the '941 patent—Office Action Response, dated February 5, 2002) (noting that "all computers must have a BIOS")). Petitioner asserts that a person of ordinary skill in the art would have been motivated to use Hellman's non-volatile memory 37 for storing the BIOS and the license information, because such an artisan would have recognized "non-volatile memory 37

Nintendo - Ancora Exh. 1016

(e.g., EEPROM) as an appropriate type of memory module for BIOS and one that would help prevent tampering with the license information." *Id.* at 30−31 (citing Ex. 1005, 3:21−35, 3:52−2; Ex. 1003 ¶¶ 112−116).

Petitioner points out that Chou discloses that, by storing sensitive information in the BIOS memory, any attempt to delete or disable the sensitive information would also disable the BIOS program. *Id.* at 32 (citing Ex. 1005, 1:63−2:1 (disclosing that "EEPROM flash devices may be programmed with BIOS routines which permit the user to enter data without requiring the computer to be returned to the manufacture," and that "[t]he present invention makes use of these new BIOS memory devices for effecting security measures which discourage theft")). Dr. Wolfe testifies that a person of ordinary skill in the art "would have been motivated to store BIOS together with the values M in the non-volatile memory 37, in order to discourage users from tampering with the values M." Ex. 1003 ¶ 115.

Based on the evidence in this current record, we determine that Petitioner has articulated a sufficient reason to combine the teachings of Hellman and Chou, for purposes of this Decision. At this juncture, Patent Owner does not make any argument regarding this limitation. *See generally* Prelim. Resp.

Motivation to combine Hellman, Chou, and Schneck

For the combination of Hellman, Chou, and Schneck, Petitioner asserts that, in light of Schneck's teachings, a person of ordinary skill in the art would have stored Hellman's licensing information, authorization A which includes value M, in *encrypted* form in non-volatile memory 37.

Nintendo - Ancora Exh. 1016

Pet. 42−46. Petitioner argues that Schneck discloses that "licensing information is transmitted in encrypted form," and that information stored on a non-volatile memory "should be stored in encrypted form to prevent an unauthorized use of a licensed software." *Id.* at 44 (citing Ex. 1006, 9:46−59 ("The packaged data 108 may include access rules 116 in encrypted form."), 25:64−67 ("Since all storage of data on internal non-volatile memory devices (for example, disks, flash memory, and the like) is encrypted, this ensures that a physical attack on the system will not result in compromise of plaintext.")). According to Petitioner, because when an "unlimited number of uses" is licensed, the unlimited license value could be duplicated for any other software package, an ordinarily skilled artisan would have recognized that it would have been important to protect that default value in encrypted form in non-volatile memory 37. *Id.* at 42−46, 48−49 (citing Ex. 1004, 10:50−54; Ex. 1003 ¶ 148); *see also* Ex. 1004, 10:55−57 (disclosing that "[i]t is also possible to sell unlimited number of uses of a software package, by reserving one value of M to represent infinity").

Based on the evidence in this current record, we determine that Petitioner has articulated a sufficient reason for purposes of this Decision to combine the teachings of Hellman, Chou, and Schneck. At this juncture, Patent Owner does not make any argument regarding this limitation. *See generally* Prelim. Resp.

Nintendo - Ancora Exh. 1016

Conclusion on Claim 1

Upon consideration of the parties' contentions and evidence in this current record, we determine that Petitioner has shown adequately for purposes of this Decision that claim 1 is unpatentable under § 103(a) as obvious over the combination of Hellman and Chou, as well as over the combination of Hellman, Chou, and Schneck. We also determine that Patent Owner's arguments do not undermine Petitioner's obviousness showing at this time.

b. Remaining challenged claims

Petitioner accounts for claims 2, 3, 6−14, and 16. Pet. 40−64. Petitioner provides detailed explanations as to how the prior art combinations teach or suggest these claims and articulates reasons to combine the prior art teachings, citing Dr. Wolfe's testimony for support. *Id.* (citing Ex. 1004; Ex. 1005; Ex. 1003), Patent Owner does not make any additional arguments in its Preliminary Response regarding these remaining claims. *See generally* Prelim. Resp. Having reviewed Petitioner's arguments and supporting evidence in the present record, we determine that Petitioners has established a reasonable likelihood of prevailing on its assertion that claims 2, 11, and 13 are unpatentable under § 103(a) as obvious over Hellman and Chou, and that claims 2, 3, 6−14, and 16 are unpatentable under § 103(a) as obvious over Hellman, Chou, and Schneck.

c. Conclusion on Obviousness

Based on the evidence in the present record, we are persuaded that Petitioner has established a reasonable likelihood of prevailing on its

Nintendo - Ancora Exh. 1016

assertion that claims 1, 2, 11, and 13 are unpatentable under § 103(a) as obvious over Hellman and Chou, and that claims 1−3, 6−14, and 16 are unpatentable under § 103(a) as obvious over Hellman, Chou, and Schneck.

III. CONCLUSION

For the foregoing reasons, we determine that the information presented in the Petition establishes that there is a reasonable likelihood that Petitioner would prevail with respect to challenged claims 1−3, 6−14, and 16 of the ’941 patent. At this juncture in the proceeding, we have not made a final determination with respect to the patentability of the challenged claims, or with respect to claim construction.

IV. ORDER

For the foregoing reasons, it is

ORDERED that pursuant to 35 U.S.C. § 314(a), an *inter partes* review is hereby instituted for the following asserted grounds:

Claims Challenged	35 U.S.C. §	References
1−2, 11, 13	103(a)	Hellman, Chou
1−3, 6−14, 16	103(a)	Hellman, Chou, Schneck

FURTHER ORDERED that pursuant to 35 U.S.C. § 314(c) and 37 C.F.R. § 42.4, notice is hereby given of the institution of a trial; the trial will commence on the entry date of this Decision.

Nintendo - Ancora Exh. 1016

PETITIONER:

John P. Schnurer
Yun (Louise) Lu
Kyle R. Canavera
PERKINS COIE LLP
schnurer-ptab@perkinscoie.com
lu-ptab@perkinscoie.com
canavera-ptab@perkinscoie.com

PATENT OWNER:

John P. Rondini
John S. LeRoy
Marc Lorelli
BROOKS KUSHMAN P.C.
jrondini@brookskushman.com
jleroy@brookskushman.com
mlorelli@brookskushman.com

Nintendo - Ancora Exh. 1016