UNITED STATES PATENT AND TRADEMARK OFFICE

BEFORE THE PATENT TRIAL AND APPEAL BOARD

SONY MOBILE COMMUNICATIONS AB, SONY MOBILE COMMUNICATIONS, INC., SONY ELECTRONICS INC., and SONY CORPORATION,
Petitioners

v.

ANCORA TECHNOLOGIES, INC.,
Patent Owner

Case IPR2021-00663
Patent No. 6,411,941

PATENT OWNER'S PRELIMINARY RESPONSE TO PETITION FOR *INTER PARTES* REVIEW UNDER 37 C.F.R. §42.107

TABLE OF CONTENTS

Table of Authorities ii

Updated List of Exhibits iii

I. Introduction 1

II. Standard for granting *Inter Partes* review 2

III. Overview of the '941 Patent 2

IV. Claim Construction 6

V. The Hellmann and Chou combination is cumulative of art already considered by this Board 14

A. The outcome of the alleged combination of Hellman and Chou is no different from Schwartz, which this Office found "no reasonable examiner would have found… important in determining the patentability of claims 1-19" 14

B. The Hellman and Chou combination is cumulative of a prior art combination the Patent Office found did not, "singly or collectively," disclose "licensed programs running at the OS level interacting with a program verification structure stored in the BIOS" 19

VI. A POSITA would not have been motivated to combine Hellman and Chou, which disclose incompatible (and thus un-combinable) techniques for storing critical data that, if combined, could result in data loss and system instability 23

VII. It would not have been obvious to modify Hellman to include the recited BIOS memory 25

VIII. Hellman is a hardware device and does not disclose an OS-level software "agent" for setting up a verification structure as Claim 1 requires 28

IX. Conclusion 34

Certificate of Service 36

Certificate of Compliance Pursuant to 37 C.F.R. §42.24 37

Table of Authorities

Cases

Ancora Techs., Inc. v. Apple, Inc.,
744 F.3d 732 (Fed. Cir. 2014).....3, 5, 20

Ancora Techs., Inc. v. HTC Am., Inc.,
908 F.3d 1343 (Fed. Cir. 2018).....3, 4, 6, 20, 22

HTC Corp. v. Ancora Techs., Inc.,
No. CBM2017-00054, Institution Decision, Paper 7 (Dec. 1, 2017)..... 6

Kinetic Concepts, Inc. v. Smith & Nephew, Inc.,
688 F.3d 1342 (Fed. Cir. 2012)..... 2

OrthoPediatrics Corp. v. K2M, Inc.,
IPR2018-01548 (PTAB March 1, 2019) 14, 34

Statutes

35 U.S.C. §101 6
35 U.S.C. §103 2
35 U.S.C. §314 2
37 C.F.R. §2.108..... 2

Other Authorities

Office Patent Trial Practice Guide,
77 Fed. Reg. 48,756, 48,756 (Aug. 14, 2012)..... 2

Updated List of Exhibits

Exhibit No.	Description	Date
2001	Scheduling Order, *Ancora Technologies, Inc. v. Sony Mobile Communications AB et al.*, Case No. 19-1703-CFC (Dkt. #24)	Sept. 16, 2020
2002	Sony's Invalidity Contentions, *Ancora Technologies, Inc. v. Sony Mobile Communications AB et al.*, Case No. 19-1703-CFC	Dec. 18, 2020
2003	Sony's Appendices A-E to Invalidity Contentions, *Ancora Technologies, Inc. v. Sony Mobile Communications AB et al.*, Case No. 19-1703-CFC	Dec. 18, 2020
2004	Apple Patent L.R. 3-3 Disclosures, *Ancora Technologies, Inc. v. Apple, Inc.*, Case No. 4:11-cv-06357 (Dkt. #171-3)	Aug. 25, 2015
2005	Order Setting Patent Case Schedule, *Ancora Technologies, Inc. v. HTC America, Inc.*, Case No. 2:16-cv-01919 (Dkt. #56)	Mar. 11, 2019
2006	E-mail from Canavera to trials@uspto.gov	Feb. 19, 2021
2007	Complaint, *Ancora Technologies, Inc. v. Sony Mobile Communications AB et al.*, Case No. 19-1703-CFC (Dkt. #1)	Sept. 11, 2019
2008	Judge Connolly Docket Navigator Statistic	Apr. 15, 2021
2009	Scheduling Order, *Ancora Technologies, Inc. v. LG Electronics, Inc. et al.*, Case No. 1:20-cv-00034 (WDTX) (Dkt. #129)	Jan. 28, 2021
2010	Expert Report of Suzanne Barber, *Ancora Technologies, Inc. v. LG Electronics, Inc. et al.*, Case No. 1:20-cv-00034 (WDTX)	Jan. 22, 2021
2011	Declaration of Erez Zadok, *Ancora Technologies, Inc. v. LG Electronics, Inc. et al.*, Case No. 1:20-cv-00034 (WDTX) (Dkt. #45-1)	Mar. 20, 2020

Exhibit No.	Description	Date
2012	Joint Claim Construction Chart, *Ancora Technologies, Inc. v. Sony Mobile Communications AB et al*., Case No. 19-1703-CFC (Dkt. #34, 34-1, 34-2)	April 6, 2021
2013 **NEW**	Ancora's Preliminary Response to Petition, Case No. IPR2020-01609 (Dkt. 6)	Dec. 17, 2020
2014 **NEW**	Decision Granting Institution, Case No. IPR2020-01609 (Dkt. 7)	Feb. 16, 2021
2015 **NEW**	Declaration of Dr. David Martin, Ph.D.	
2016 **NEW**	*Ancora Techs., Inc. v. Apple, Inc.*, 744 F.3d 732 (Fed. Cir. 2014)	
2017 **NEW**	Phil Croucher, "The BIOS Companion," Tri-Tam Enterprises Inc. 1997	
2018 **NEW**	Telephonic Markman Hearing Tentative Ruling, *Ancora Technologies, Inc. v. TCT Mobile (US), Inc. et al.*, Case No. 8:19-cv-02192 (CDCA) (Dkt. #60)	Oct. 15, 2020
2019	RESERVED	
2020	RESERVED	
2021	RESERVED	
2022 **NEW**	US Patent 6,189,146 B1 ("Misra")	Feb. 13, 2001
2023 **NEW**	US Patent 5,479,639 ("Ewertz")	Dec. 26, 1995
2024 **NEW**	Microsoft Corporation's Request for *Ex Parte* Reexamination Image File Wrapper, Control No. 90010560	
2025 **NEW**	Final Rulings on Claim Construction, *Ancora Technologies, Inc. v. TCT Mobile (US), Inc. et al.*, Case No. 8:19-cv-02192 (CDCA) (Dkt. #66, #69)	Nov. 12, 2020; Nov. 19, 2020

I. Introduction

Pursuant to 37 C.F.R. §42.107, Patent Owner, Ancora Technologies, Inc. ("Patent Owner"), submits the following Preliminary Response to the Petition for *Inter Partes* Review of U.S. Patent No. 6,411,941 ("the '941 Patent").

TCT Mobile (US) Inc., Huizhou TCL Mobile Communication Co., Ltd., and Shenzhen TCL Creative Cloud Technology Co., Ltd. (collectively, "TCT") filed a Petition in IPR2020-01609 ("the '1609 IPR"), requesting an *inter partes* review ("IPR") of claims 1−3, 6−14, and 16 ("the challenged claims") of U.S. Patent No. 6,411,941. (*See* IPR2020-01609, Paper 12 at 1.) Although Ancora filed a preliminary response (Ex. 2013) challenging certain issues of the TCT petition, this Board instituted on February 16, 2021. (Ex. 2014.)

Seeking to join the TCT petition, Sony Mobile Communications AB, Sony Mobile Communications, Inc., Sony Electronics Inc., and Sony Corporation (collectively, "Sony") filed its petition in IPR2021-00663 ("the '663 IPR").[1] As supported by the declaration of Dr. David Martin (Ex. 2015, "Martin

[1] Samsung Electronics, Co., Ltd. and Samsung Electronics America, Inc. (collectively, "Samsung") also filed a joinder Petition in IPR2021-00583 ("the '583 IPR") but has subsequently settled and moved to dismiss its petition. (IPR2021-00583, Paper 11.)

Declaration"), Sony's petition simply treads old ground and does not overcome the presumption of patentability for the claims of the '941 Patent.

II. Standard for granting *Inter Partes* review

The Board may only grant a petition for *inter partes* review where "the information presented in the petition . . . shows that there is a reasonable likelihood that the petitioner would prevail with respect to at least 1 of the claims challenged in the petition." 35 U.S.C. §314(a); 37 C.F.R. §2.108(c). Petitioner bears the burden of showing that this statutory threshold has been met. *See* Office Patent Trial Practice Guide, 77 Fed. Reg. 48,756, 48,756 (Aug. 14, 2012) [hereinafter "Practice Guide"] ("The Board . . . may institute a trial where the petitioner establishes that the standards for instituting the requested trial are met . . . .").

As to Petitioner's claim of obviousness under 35 U.S.C. §103, Petitioner must show where each claim limitation (as properly construed) is found in the prior art. *See, e.g.*, *Kinetic Concepts, Inc. v. Smith & Nephew, Inc.*, 688 F.3d 1342, 1361 (Fed. Cir. 2012). Failure to do so defeats a claim of obviousness. *Id.* The Office Patent Trial Practice Guide specifies that among the many responses a patent owner can submit to a petition include: "The prior art lacks a material limitation in all of the independent claims." Practice Guide, 77 Fed. Reg. at 48,764.

III. Overview of the '941 Patent

The '941 Patent relates to a specific technique for "identifying and

restricting an unauthorized software program's operation." (Ex. 1001 at 1:6-8.)

Before the '941 Patent, there were two basic methods of verifying and restricting the operation of a program. One involved "software-based methods" that "require[d] writing a license signature on the computer's hard drive." *Ancora Techs., Inc. v. HTC Am., Inc.,* 908 F.3d 1343, 1344 (Fed. Cir. 2018) ("*HTC*"). A key "flaw in those methods," however, "is that such a signature can be changed by hackers without damaging other aspects of computer functionality." *Id. citing* Ex. 1001 at 1:19-26. Hardware-based methods also existed, but "require[d] inserting a dongle into a computer port to authenticate the software authorization." *Id.* citing Ex. 1001 at 1:27-32. As a result, those "methods are costly, inconvenient, and not suitable for software sold and downloaded over the internet." *Id.*

The '941 Patent improved over these prior art techniques by "using the memory space associated with the computer's basic input/output system (BIOS), rather than other memory space, to store appropriately encrypted license information to be used in the verification process." *Ancora Techs., Inc. v. Apple, Inc.*, 744 F.3d 732, 733 (Fed. Cir. 2014), *citing* Ex. 1001 at 1:46-2:5, 4:45-48, and 5:19-24. Such BIOS memory space was and "is typically used for storing programs that assist in the start-up of a computer." *HTC*, 908 F.3d at 1345. Prior to the '941 invention, however, it was not contemplated that operating system ("OS") level programs could interact with the BIOS at all—much less "us[e] an agent to setup a

verification structure in the erasable non-volatile memory area of the BIOS." Ex. 1002 at 34; *HTC*, 908 F.3d at 1348-49 (stating that "[t]he claimed method here specifically identifies how that functionality improvement is effectuated in an assertedly unexpected way: a structure containing a license record is stored in a particular, modifiable, non-volatile portion of the computer's BIOS, and the structure in that memory location is used for verification").

As the Federal Circuit explained, using the BIOS in this unexpected manner "improves computer security, . . . because successfully hacking BIOS memory (*i.e.*, altering it without rendering the computer inoperable) is much harder than hacking the memory used by the prior art to store license-verification information." *HTC*, 908 F.3d at 1345. During examination, the Patent and Trademark Office described the invention as proceeding against the conventional wisdom in the art to do something "the closest prior art systems, singly or collectively," never contemplated: "using an agent to set up a verification structure in the erasable, non-volatile memory of the BIOS." (Ex. 1002 at 34.)

The claims of the '941 Patent have been extensively re-examined since the Patent and Trademark Office's original examination in 2002. In 2009, Microsoft requested *ex parte* reexamination of the '941 Patent. Control No. 90/010,560. (Ex. 2024.) In that proceeding, the Patent and Trademark Office confirmed the patentability of all 19 claims of the '941 Patent. Specifically, the Patent Office

explained "memory of the BIOS." The Patent Office made clear that, "consistent with the specification of the '941 patent," memory of the "BIOS is therefore defined by the functional descriptive material contained within it." (Ex. 2024 at 164.) Simply put, "one skilled in the art" would consider memory to be "memory of the BIOS" only if it was non-volatile memory that *contains* data "used by the functions of BIOS itself," which the Patent Office explained includes to "test hardware, start[] the operating system, and support the transfer of data among hardware devices."[2] Thus, the mere fact that data resides in non-volatile memory "does not necessarily mean that it is part of the BIOS." (Ex. 2024 at 164.) More is required to meet the claims. Accordingly, the Patent Office confirmed the patentability of all claims of the '941 Patent.

In 2012, Apple, Inc. challenged the claims of the '941 Patent as indefinite. The Federal Circuit affirmed the district court's finding that the claim terms "volatile memory" and "non-volatile memory" were not indefinite. (Ex. 2016 at 6), *Ancora Techs., v. Apple, Inc.,* 744 F.3d 732, 737-739 (Fed. Cir. 2014).

In 2017, the '941 Patent was the subject of a petition for covered business

[2] As the Patent Office also explained, this does not preclude data stored in BIOS from "being also used or modified by programs located outside of the BIOS, such as applications running in an operating system." (Ex. 2024 at 164.)

method review filed by HTC Corp. The Board denied institution, finding that the ’941 Patent was not a covered business method patent because it disclosed a technical solution in the form of storing the license record in the memory of the BIOS. *HTC Corp. v. Ancora Techs., Inc.*, No. CBM2017-00054, Institution Decision, Paper 7, pp. 10–12 (Dec. 1, 2017).

Most recently, in 2018, the ’941 Patent was the subject of an appeal to the Federal Circuit in *Ancora Technologies, Inc. v. HTC Am., Inc.*, 908 F.3d 1343 (Fed. Cir. 2018). The Federal Circuit reversed the district court’s ruling that the claims of the ’941 Patent were patent ineligible under 35 U.S.C. §101.

IV. Claim Construction

Numerous district courts have now construed the challenged claims of the ’941 Patent. The below table provides each term and construction provided by the various district courts:

Term	Definition	Case
a computer including an erasable, non-volatile memory area of the BIOS of the computer, and a volatile memory area (preamble of claim 1)	this portion of the preamble is limiting	Ex. 1012 at 5[3] [LG CASE]

[3] *Ancora Technologies, Inc. v. LG Electronics, Inc. et al*, Case No. 1:20-cv-00034 (WDTX).

Term	Definition	Case
a method of restricting software operation within a license ... (preamble of claim 1)	not limiting; the term "license" does not need to be construed	Ex. 1012 at 2 [LG CASE]
acting on the program according to the verification	Plain and ordinary meaning, wherein the step of "acting on the program" may include, but is not limited to, "restricting the program's operation with predetermined limitations, informing the user on the unlicensed status, halting the operation of the program under question, and asking for additional user interactions."	Ex. 1012 at 4 [LG CASE]
All Asserted Claims	The steps of the Claim do not need to be performed in the order recited.	Ex. 1011 at 19-20, 21 [APPLE CASE]
BIOS	An acronym for Basic Input/Output System. It is the set of essential startup operations that run when a computer is turned on, which tests hardware, starts the operating system, and supports the transfer of data among hardware devices.	Ex. 1011 at 8-11, 20 [APPLE CASE]
BIOS	Plain and ordinary meaning wherein the plain and ordinary meaning is "An acronym for Basic Input / Output System. It is the set of essential startup operations that begin to run automatically when a computer is turned on, which test	Ex. 1012 at 2 [LG CASE]

Term	Definition	Case
	hardware, starts the operating system, and support the transfer of data among hardware devices”	
BIOS (Basic Input/Output System)	An acronym for Basic Input/Output System. It is the set of essential startup operations that run when a computer is turned on, which test hardware, starts the operating system, and support the transfer of data among hardware devises	Ex. 2025 at 4; *see also* Ex. 2018 at 4 [TCL CASE]
first non-volatile memory area of the computer	plain and ordinary meaning	Ex. 1012 at 5 [LG CASE]
first non-volatile memory area of the computer	a non-volatile memory that is different from the erasable, non-volatile memory of the BIOS	Ex. 2025 at 14-18, 20; *see also* Ex. 2018 at 18 [TCL CASE]
license	does not need to be construed	Ex. 1012 at 2 [LG CASE]
license record	A record from a licensed program with information for verifying that licensed program.	Ex. 1011 at 16-17, 20 [APPLE CASE]
license record	data associated with a licensed program with information for verifying that licensed program	Ex. 1012 at 2 [LG CASE]
license record	a record from a licensed program with information for verifying that licensed program	Ex. 2025 at 9-11, 20; *see also* Ex. 2018 at 9-12, 19 [TCL CASE]

Term	Definition	Case
license record[4]	a record having information for verifying that licensed program	Ex. 2014 at 9 [TCT Institution Decision]
memory of the BIOS	does not require construction	Ex. 1012 at 3 [LG CASE]
memory of the BIOS	plain and ordinary meaning, i.e., a memory that stores the BIOS	Ex. 2025 at 11-14, 20; *see also* Ex. 2018 at 12-14, 20 [TCL CASE]
non-volatile memory	memory whose data is maintained when the power is removed or voltage is too low	Ex. 1012 at 1 [LG CASE]
non-volatile memory area of the BIOS	memory area of BIOS whose data is maintained when the power is removed	Ex. 2025 at 4; *see also* Ex. 2018 at 4 [TCL CASE]
non-volatile memory of the BIOS	does not require construction	Ex. 1012 at 3 [LG CASE]
non-volatile memory	Memory whose data is maintained when the power is removed.	Ex. 1011 at 5-7, 20 [APPLE CASE]
order of steps (claim 1)	Use of the verification structure, as described in Limitation 3, cannot complete until the "set up a verification structure" step has completed, as described in Limitation 2. “Acting on the program according to the verification," as described in Limitation 4, cannot complete until the “verifying the program" is completed as described in Limitation 3. The	Ex. 1012 at 5 [LG CASE]

[4] This Board previously instituted based on a preliminarily construction for the term “license record” which was different than other various district courts.

Term	Definition	Case
	"selecting a program residing in the volatile memory" as described in Limitation 1 can occur at any time. (*See also* footnotes on Ex. 1012 at 5)	
order of steps (claim 1)	Claim 1 presents restrictions only on when certain actions must complete before another is also completed; therefore the order of claim 1 steps are as follows: Use of the verification structure, as described in Limitation (c), cannot complete until the "set up a verification structure" step has completed, as described in Limitation (b); "acting on the program according to the verification," as described in Limitation (d), cannot complete until the "verifying the program" is completed as described in Limitation (c); the "selecting a program residing in the volatile memory," as described in Limitation (a), can occur at any time[1] [1] Limitation [a] = "selecting a program residing in the volatile memory; Limitation [b] = "using an agent to set up a verification structure in the erasable, non-volatile memory of the BIOS, the verification structure accommodating data	Ex. 1013 at 7-10, 37 [LG CASE]

Term	Definition	Case
	that includes at least one license record; Limitation [c] = "verifying the program using at least the verification structure from the erasable non-volatile memory of the BIOS," and Limitation [d] = "acting on the program according to the verification"	
program	a set of instruction that can be executed by a computer	Ex. 1012 at 3 [LG CASE]
selecting a program residing in the volatile memory	plain and ordinary meaning	Ex. 1012 at 3 [LG CASE]
selecting a program residing in the volatile memory	no construction	Ex. 2025 at 20; *see also* Ex. 2018 at 19 [TCL CASE]
set up a verification structure	"establishing or certifying the existence of a pseudo-unique key and establishing at least one license-record location"[1] [1] Footnote not for jury. "Establishing at least one license-record location" may include the steps of "forming a license-record by at least partially encrypting the contents used to form a license-record with other predetermined data contents, using at least part of the pseudo-unique key; and storing the encrypted license-record"	Ex. 1012 at 4 [LG CASE]

Term	Definition	Case
set up a verification structure	no construction	Ex. 2025 at 20; *see also* Ex. 2018 at 19 [TCL CASE]
using an agent to set up a verification structure in the erasable, non-volatile memory of the BIOS	Plain and ordinary meaning, wherein the plain and ordinary meaning of "agent" is "a software program or routine"	Ex. 1012 at 3 [LG CASE]
using an agent to set up a verification structure in the erasable, non-volatile memory of the BIOS	plain and ordinary meaning, wherein the plain and ordinary meaning of "agent" is a software program or routine (§112 ¶6 does not apply)	Ex. 1013 at 28-36, 37 [LG CASE]
using the key	using a pseudo-unique key	Ex. 1012 at 5 [LG CASE]
verifying the program using at least the verification structure	Confirming whether a program is licensed using at least the verification structure.	Ex. 1011 at 18-19, 21 [APPLE CASE]
verifying the program using at least the verification structure	confirming whether a program is licensed using at least the verification structure	Ex. 1012 at 4 [LG CASE]
volatile memory	Memory whose data is not maintained when the power is removed.	Ex. 1011 at 5-7, 20 [APPLE CASE]
volatile memory	Plain and ordinary meaning wherein the plain and ordinary meaning is "memory whose data is not maintained when the power is removed"[1] [1] Footnote not for the jury. "For the corner case where the hard disk drive is used as virtual RAM, the data is not accessible by normal means after the power is removed."	Ex. 1012 at 2 [LG CASE]

Term	Definition	Case
volatile memory	"memory whose data is not maintained when the power is removed," with the exception that "where the hard disk drive is used as virtual RAM, the data is not accessible by normal means after the power is removed"	Ex. 2025 at 4-5, 20; *see also* Ex. 2018 at 4-5, 19 [TCL CASE]
wherein establishing a license - record includes the steps of: forming a license - record by encrypting of the contents used to form a license - record with other predetermined data contents, using the key; and establishing the encrypted license - record in one of the at least one established license - record locations	no construction	Ex. 2025 at 18-19, 20; *see also* Ex. 2018 at 19-20 [TCL CASE]

Petitioner asserts that it "does not believe that any claim constructions are needed" in this proceeding. (Paper No. 1, p. 19.) But this assertion is inconsistent with Petitioner's claim construction assertions in the parallel district court litigation. As shown by a joint claim construction chart submitted on April 6, 2021 – shortly before its Petition was filed in this proceeding – Petitioner has taken claim construction positions different from those of the other district courts – and the preliminary construction of this Board. (Ex. 2012.) The fact that Sony is

pursuing different claim constructions positions in the underlying district court proceeding as compared to the present Joinder Petition is one reason for denial. *OrthoPediatrics Corp. v. K2M, Inc.*, IPR2018-01548, Paper 9, p. 11 (PTAB March 1, 2019).

V. The Hellmann and Chou combination is cumulative of art already considered by this Board

A. The outcome of the alleged combination of Hellman and Chou is no different from Schwartz, which this Office found "no reasonable examiner would have found… important in determining the patentability of claims 1-19"

Petitioner alleges a POSITA would modify Hellman's "memory 37" (based on the teaching of Chou) such that it satisfies the recited "memory of BIOS." Petitioner even annotates Hellman's "memory 37" as being the same BIOS EEPROM disclosed by Chou.

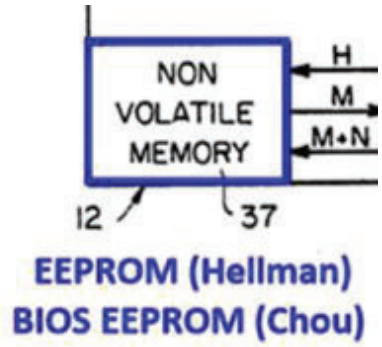

(IPR2020-01609, Paper 1 at 29; *see also* Sony Petition at 26-31.)

Such a modification is necessary because Petitioner states Hellman's value "M" is the claimed "verification structure" that is stored in the "memory of the

BIOS." And Petitioner alleges the modification would have been possible because EEPROM memory ***could*** store BIOS routines and unrelated non-BIOS data (i.e., the "verification structure").

> Moreover, it was common practice to <u>store more than one thing in a single memory module</u> in a computer. Wolfe Decl. ¶¶112–116, 119–120.
>
> Because a single EEPROM module would have had sufficient space to store both the BIOS and other ancillary information, like the license information from Hellman,

(IPR2020-01609, Paper 1 at 31, emphasis added; *see also* Sony Petition at 29.)

But Petitioner's argument has already been considered by this Office when presented by Microsoft and Samsung with respect to U.S. Patent No. 6,153,835 ("Schwartz"). (Ex. 2024; IPR2020-01184, Paper 1 at 7-30.) As described above, the result of the combination of Hellman and Chou is (at most) an EEPROM that contains a BIOS and other information. (IPR2020-01609, Paper 1 at 31; *see also* Sony Petition at 29.) This is no different from what was disclosed in Schwartz.

As shown below, Schwartz (unlike Hellman and Chou) even discloses an EEPROM memory (250 below) that includes ***both*** BIOS (309 below) and a license verification structure (307 below).

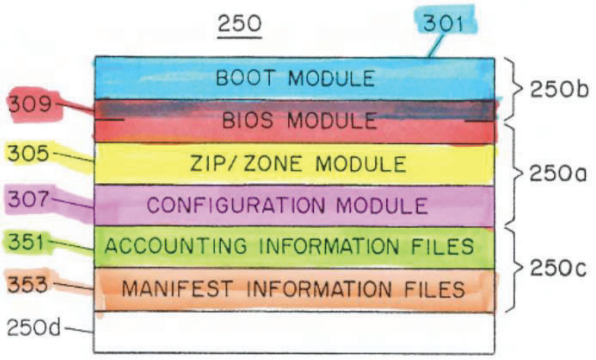

FIG. 9

The Patent Office had no difficulty finding Schwartz to fall far short of the '941 invention. As it explained, "[i]t is NOT agreed that a reasonable examiner would have found this reference important in determining the patentability of claims 1-19." (Ex. 2024 at 165.)

The Patent Office made clear that, "consistent with the specification of the '941 patent," memory of the "BIOS is therefore defined by the functional descriptive material contained within it" (Ex. 2024 at 164) —it is not defined solely by its physical structure. Simply put, "one skilled in the art" would consider memory to be "memory of the BIOS" only if it was non-volatile memory that *contains* data "used by the functions of BIOS itself," which the Patent Office explained includes to "test hardware, start[] the operating system, and support the

transfer of data among hardware devices."[5] (Ex. 2024 at 163-164.) Thus, the mere fact that data resides in non-volatile memory "does not necessarily mean that it is part of the BIOS." (Ex. 2024 at 164.) More is required to show that a specific memory area is part of the BIOS. Accordingly, the Patent Office confirmed the patentability of all claims of the '941 Patent, explaining:

> It is therefore the case that the table created cannot be considered to be in the BIOS either. Schwartz is therefore merely cumulative to the art cited by the Examiner during prosecution, insofar as it teaches to the claim limitations. It is NOT agreed that a reasonable examiner would have found this reference important in determining the patentability of claims 1-19.

(Ex. 2024 at 165.)

Indeed, Samsung recently attempted to reassert Schwartz to this Board in its original IPR petition. (IPR2020-01184, Paper 1 at 7-30.) Patent Owner addressed Samsung's usage of Schwartz:

> [T]he mere fact that the EEPROM 250a contains a BIOS module does not mean the entirety of the EEPROM is the memory of the BIOS.

---

[5] As noted previously, the Patent Office further explained that this does not preclude data stored in BIOS from "being also used or modified by programs located outside of the BIOS, such as applications running in an operating system." (Ex. 2024 at 164.)

> Indeed, this Office has rejected this argument when Microsoft advanced it in the *Ex Parte* Reexamination. That makes sense. Such a remarkably broad construction is inconsistent with the clear meaning of "memory of the BIOS" and would render effectively *all* portions of any physical memory structure that contains a segment dedicated or used by the BIOS to be memory of the BIOS.

(IPR2020-01184, Paper 7 at 24, emphasis in original.)

The Board agreed. It rejected Samsung's reliance on the Schwartz reference —explaining:

> In its Petition, Petitioner takes the position that Schwartz's EEPROM 250a teaches the claimed "non-volatile memory of the BIOS" under the Federal Circuit's interpretation in *Ancora v. Apple* "because it stores *part of* BIOS module 309." Pet. 9−11 n.4 (citing Ex. 1005, 8:17−19, Fig. 9) (emphasis added). However, other parts of Schwartz's EEPROM 250a store configuration module 307 and zip/zone module 305. Ex. 1005, 8:17−19, Fig. 9. Petitioner does not allege that these other modules themselves are associated with the computer's BIOS. Pet. 10−11. Significantly, Petitioner does not explain adequately why the entirety of EEPROM 250a, including the memory space that stores configuration module 307 and zip/zone module 305, is a "non-volatile memory of BIOS." Pet. 10−14.

(IPR2020-001184, Paper 11 at 26, emphasis in original.)

The combination of Hellman and Chou is no different, Petitioner does not explain how Hellman's "memory 37" is adequately modified as being a non-

volatile ***memory of BIOS***. Schwartz *at a minimum* disclosed an EEPROM (250) that described storing BIOS module (309) ***and*** another portion of memory for storing configuration module (307). Petitioner's combination, however, simply argues Hellman's entire "memory 37" is modified as being a non-volatile memory of the BIOS. The Patent Office already rejected such a position in the Microsoft Reexamination proceeding and in the Samsung Petition. (Ex. 2024; IPR2020-01184, Paper 11.)

As the present combination of Hellman and Chou has already been considered based on arguments raised with respect to Schwartz, the present petition should be denied.

B. The Hellman and Chou combination is cumulative of a prior art combination the Patent Office found did not, "singly or collectively," disclose "licensed programs running at the OS level interacting with a program verification structure stored in the BIOS"

Even assuming against the evidence that a POSITA would make the combinations that Dr. Wolfe describes and thereby find some "memory of the BIOS," one cannot conclude that the POSITA would arrive at a system that results in using OS-level software to set up a verification structure in a memory of the BIOS.

Specifically, Hellman and Chou are entirely cumulative of the combination of U.S. 6,189,146 ("Misra") (Ex. 2022) and U.S. 5,479,639 ("Ewertz") (Ex. 2023),

which was considered by the Examiner during prosecution. ***Misra is a generic software licensing reference, <u>similar to</u> Hellman,*** that describes a software licensing system that lacks the inventive step of storing a verification structure in the erasable non-volatile memory of the BIOS. ***Ewertz is a BIOS-only reference similar to Chou.*** There is no teaching in any reference of expanding BIOS memory to store program licensing data and the Petition is intentionally silent on this fact because the '941 Patent clearly improved over the prior art by "using the memory space associated with the computer's basic input/output system (BIOS), rather than other memory space, to store appropriately encrypted license information to be used in the verification process." *Ancora Techs., Inc. v. Apple, Inc.*, 744 F.3d 732, 733 (Fed. Cir. 2014), *citing* Ex. 1001 at 1:46-2:5, 4:45-48, and 5:19-24.

Such BIOS memory space was and "is typically used for storing programs that assist in the start-up of a computer." *HTC*, 908 F.3d at 1345. Prior to the '941 invention, however, it was not contemplated that operating system ("OS") level programs could interact with the BIOS at all—much less "us[e] an agent to setup a verification structure in the erasable non-volatile memory area of the BIOS." Ex. 1002 at 34; *HTC*, 908 F.3d at 1348-49 (stating that "[t]he claimed method here specifically identifies how that functionality improvement is effectuated in an assertedly unexpected way: a structure containing a license record is stored in a particular, modifiable, non-volatile portion of the computer's BIOS, and the

structure in that memory location is used for verification").

During prosecution, the Examiner initially rejected independent Claim 1 as obvious in view of Misra (Ex. 2022) (to which Hellman is cumulative) and Ewertz (Ex. 2023) (to which Chou is cumulative). In response, the Patent Owner addressed deficiencies in both the combined outcome and the combination itself and explained why it would not have been obvious to a POSITA to combine a generic software licensing reference with a generic BIOS storage reference because (1) OS level programs (like Misra and Hellman) and BIOS (like Ewertz and Chou) normally could not interact and (2) BIOS was not considered a storage area for OS level programmers because there was no OS support to write to it and no file system associated with it. (Ex. 1002 at 49-50.)

In response to these arguments, the Examiner withdrew the rejections under 35 U.S.C. §103 and issued a Notice of Allowance stating, in part:

> [T]he Misra et al.... and the Ewertz et al. system[s] run at the operating system level and BIOS level, respectively... the closest prior art systems, singly or collectively, do not teach licensed programs running at the OS level interacting with a program verification structure stored in the BIOS to verify the program using the verification structure and having a user act on the program according to the verification. Further, it is well known to those of ordinary skill of the art that a computer BIOS is not setup to manage a software license verification structure. The present invention overcomes this

> difficulty by using an agent to set up a verification structure in the erasable, non-volatile memory of the BIOS.

(Ex. 1002 at 34.)

Claim 1 is patentable over Hellman and Chou for analogous reasons. Indeed, Petitioner tellingly did not address the Examiner's conclusion, nor can it. Petitioner fails to demonstrate how, under an appropriate claim construction, the combination of Hellman and Chou satisfies the "non-volatile memory of the BIOS" limitation that is required for "us[e] [by] an agent to setup a verification structure in the erasable non-volatile memory area of the BIOS." Thus, the use of Chou to find "BIOS memory" doesn't teach this limitation in the proposed combination.

Moreover, any combination is based on improper hindsight reconstruction, as the Federal Circuit explained, using the BIOS in this unexpected manner "improves computer security, . . . because successfully hacking BIOS memory (*i.e.*, altering it without rendering the computer inoperable) is much harder than hacking the memory used by the prior art to store license-verification information." *HTC*, 908 F.3d at 1345. During examination, the Patent and Trademark Office described the invention as proceeding against the conventional wisdom in the art to do something "the closest prior art systems, singly or collectively," ***never contemplated:*** "using an agent to set up a verification structure in the erasable, non-volatile memory of the BIOS." (Ex. 1002 at 34.) Hellman and/or Chou

similarly never contemplate "using an agent to set up a verification structure in the erasable, non-volatile memory of the BIOS."

Because the substance of the art and arguments here were previously considered during prosecution of the '941 Patent, this Joinder Petition should be denied.

VI. A POSITA would not have been motivated to combine Hellman and Chou, which disclose incompatible (and thus un-combinable) techniques for storing critical data that, if combined, could result in data loss and system instability

Furthermore, in reality, Hellman's architecture is incompatible with memory of the BIOS that is used for BIOS functions like "test[ing] hardware, start[ing] the operating system, and support[ing] the transfer of data among hardware devices" like the BIOS disclosed by Chou or the '941 Patent. (Ex. 2024 at 163-164.)

A POSITA would recognize that the combination of Hellman and Chou likely would result in the loss of critical data. BIOS is used to store information such as the number of cylinders and heads on a computer's attached hard drives for the order in which BIOS will search devices for a bootable operating system. (Ex. 2015, Martin Declaration at ¶107.) If BIOS memory is also taken to be addressable by hash values and used for storage of authorization counts based solely on the output of a hashing algorithm (e.g., hash value H) as Hellman contemplates for its non-BIOS memory, it can result in memory overlap. In short, the purchase of a

software package with an unfortunate hash value H would cause of base unit to overwrite the BIOS instructions or other critical BIOS information, which would result in the loss of critical data ***and could render the system unusable***. (Ex. 2015, Martin Declaration at ¶¶106-107.)

Thus, any use of Hellman's "non-volatile memory 37" for BIOS purposes (as disclosed in Chou) would require abandoning the H hash value/memory address storage techniques Hellman teaches. A POSITA thus would have not been motivated to combine Hellman and Chou because, as combined, BIOS routines or data would be at a substantial risk of being corrupted anytime a software package 17 was instructed to be stored in a memory address (i.e. by address "H") that already stored a BIOS instruction. (Ex. 2015, Martin Declaration at ¶106.) This is emphasized by the fact Hellman discloses that its non-volatile memory's memory 37 is constructed as a hash table over software packages, wherein memory address H denotes the hash value of a software package and that memory location H stores the number of remaining authorizations M of that software package's use. Ex. 2015, Martin Declaration at ¶106) (Ex. 1004, Hellman at 10:33-34; Ex. 1003 at ¶142, Wolfe Declaration.)

For this reason, this Joinder Petition should be denied.

VII. It would not have been obvious to modify Hellman to include the recited BIOS memory

Finally, the Wolfe Declaration admits Hellman does not mention nor disclose the use of BIOS. (Ex. 1003 at ¶105.) As it states: "Hellman does not disclose that the non-volatile memory 37 is a BIOS, or that the base unit 12 included BIOS." Recognizing Hellman's lack of disclosure regarding BIOS, the Wolfe Declaration simply states it would have been "obvious to implement Hellman's technique in a computer having a BIOS and thus a memory storing the BIOS." *Id.* at ¶111. (Ex. 2015, Martin Declaration at ¶99.)

To support the obviousness argument, Dr. Wolfe thus points to Chou as disclosing EEPROM memory that may be used as BIOS memory to store "BIOS routines." (Ex. 1003 at ¶106.) The Wolfe Declaration tries to bridge Chou's disclosure of BIOS with Hellman by stating "BIOS existed in 1983" and was "ubiquitous in all computers." (Ex. 1003 at ¶108.) But finding a reference disclosing BIOS, and simply stating BIOS was ubiquitous in computers, does not demonstrate why a POSITA would have been motivated to modify Hellman's EEPROM that stores the has value to be where the BIOS functionality resides. (Ex. 2015, Martin Declaration at ¶100.) As the Patent Office explained, that fact that a program or table resides in a "non-volatile memory does not necessarily mean that it is part of the BIOS." (Ex. 2024 at 164.) Petitioner retreads old ground.

Also, while BIOS functionality can be implemented on EEPROM memory[6] that does not mean all EEPROMs are BIOS. In other words, EEPROM does ***not always*** equal BIOS memory. EEPROM memory was and is a type of memory used in numerous electronic devices – including personal computers. Thus, just because Hellman discusses the use of EEPROM within a hardware-based solution does not mean Hellman's EEPROM was BIOS memory. In fact, a POSITA would not take Hellman's silence with regards to BIOS as meaning the disclosed EEPROM should be converted to BIOS. Instead, a POSITA would have understood that BIOS is simply irrelevant to the goals and objectives of Hellman's invention. (Ex. 2015, Martin Declaration at ¶100.) This is reinforced by the fact that Hellman is very explicit about the types of memories it uses, the purposes those memories serve, and that Hellman never discusses BIOS. (Ex. 2015, Martin Declaration at ¶101.)

For instance, Hellman discloses using "memory" in the following methods:

- "Authorization and billing unit 13 contains a memory 18 having a table of serial numbers and secret keys which allows authorization and billing unit 13 to determine a base unit's secret key, SK, from knowledge of the base unit's public serial number." (Ex. 1004,

[6] EEPROM was and is still one of the most widely used forms of memory for all types of devices.

Hellman at 6:16-21; Ex. 2015, Martin Declaration at ¶101.)

- "Authorization and billing unit 13 also contains in another portion of the memory or in an additional memory 19 a table of software which allows authorization and billing unit 13 to determine the complete contents of software package 17 from knowledge of the much smaller information SOFTWARE NAME." (Ex. 1004, Hellman at 6:21-27; Ex. 2015, Martin Declaration at ¶102.)
- "Base unit 12 stores these values in a temporary memory 28, for example a RAM." (Ex. 1004, Hellman at 8:66-67; Ex. 2015, Martin Declaration at ¶106.)
- "permanent memory 31 … [may be used as] a secure memory, inaccessible to the user." (Ex. 1004, Hellman at 9:30-47; Ex. 2015, Martin Declaration at ¶102.)
- "only those elements of the base unit 12 which are needed in a particular pages are shown in the corresponding figure" (Ex. 1004, Hellman at 8:57-61.)

The above quotes emphasize – contrary to Wolfe's Declaration argument that a POSITA would understand all computers have a BIOS – Hellman does not disclose BIOS because it is not necessary for the disclosed invention. Recognizing Hellman does not need or hint at using BIOS memory, the Wolfe Declaration

unnecessarily pulls in the BIOS functionality from Chou to argue Hellman's EEPROM can be BIOS. But the Wolfe Declaration cites no motivation, teaching, or suggestion to do either of these things, other than speculating that there may be an EEPROM with varying memory space to permit it. And the Wolfe Declaration does not opine on whether a POSITA would understand these operations to take place at the BIOS level or any other software level. There is certainly no reason to think that the asserted combinations would inevitably result in using OS-level software to set up a verification structure in a memory of the BIOS. Hellman mentions neither BIOS nor an operating system. (Ex. 2015, Martin Declaration at ¶105.)

VIII. Hellman is a hardware device and does not disclose an OS-level software "agent" for setting up a verification structure as Claim 1 requires

Sony's Petition should also be denied as the proposed combination of Hellman (in combination or alone) does not invalidate the asserted claims. Specifically, Hellman discloses an agent comprised entirely of specialized hardware which it refers to as "update unit 36" (which it describes as a component of "base unit 12"). (Ex. 2015, Martin Declaration at ¶¶89-90.) For instance, in describing Figure 8 Hellman states:

> FIG. 8 depicts an implementation [*sic*] of the base unit 12 during use of a software package. Software package 17 is connected to the base

unit 12 and a signal representing said software package is operated on by the one-way hash function generator 33 to produce an output signal which represents the hash value H. The signal H is transmitted to update unit 36 to indicate which software package is being used. Update unit 36 uses H as an address to non-volatile memory 37, which responds with a signal representing M, the number of uses of software package 17 which are still available.

(Ex. 1004, Hellman Patent at 10:33-43.)

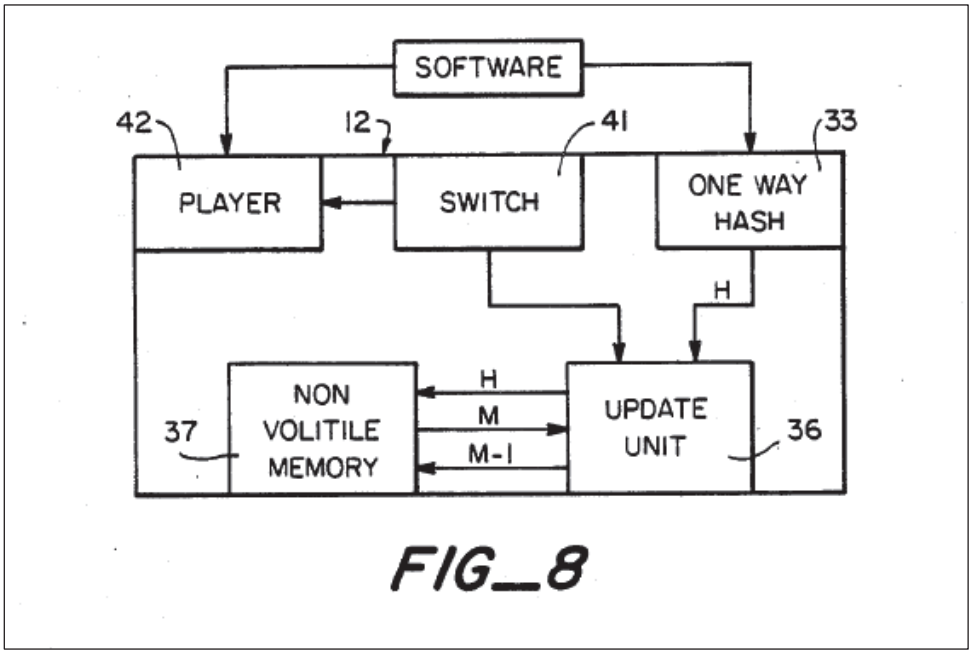

Hellman then discusses the physical construction of the base unit, including its wires, switches, and glue.

Base unit 12 should be physically constructed so that switch 41 is not readily accessible to the user. ***Otherwise a user could cut the wire sending the control signal from update unit 36 to software player 42 and force the control signal to always activate software player 42***.

> The use of epoxy to encapsulate switch 41 and the wire connecting it to update unit 36 would be one such approach. It may suffice only to detect if a base unit 12 has been tampered with if the user signs a license agreement which says he will not open the base unit. Detection of tampering is a simpler task and techniques are well known for accomplishing this task. For example, many warranties are void if equipment is opened by the user. Manufacturers of such equipment use special factory seals or a dab of paint across a joint to tell if a piece of equipment has been opened.

(Ex. 1004, Hellman Patent at 11:4-19, emphasis added.)

A POSITA would understand that Hellmann describes a procedure used to modify Hellman's non-volatile memory in response to a new authorization. (Ex. 2015, Martin Declaration at ¶91.) Hellman even describes the cryptographic check unit and its comparator and input and output signals:

> FIG. 7 depicts an implementation of the cryptographic check unit 34. Signals representing K, N, R, and H are applied as inputs to a cryptographic function generator 38 which generates a check value C as an output signal. Signals C and A are input to a comparator 39. If each bit of C matches the corresponding bit of A then the comparator 39 and the cryptographic check unit 34 generate a signal which indicates that A is to be considered a proper authorization and that the update unit 36 is to add N authorized uses to the software package with hash value H.

(Ex. 1004, Hellman at 10:14-24.)

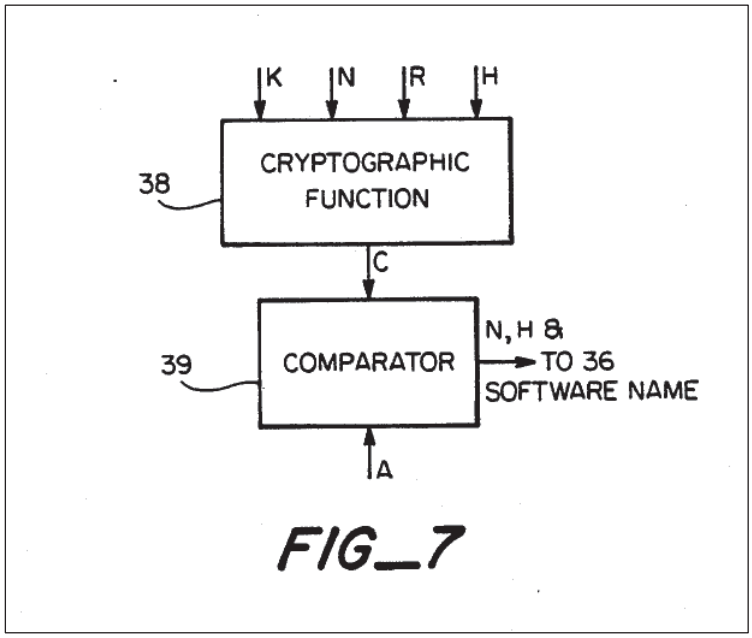

Hellman discloses the output of the comparator above as including "N, H & Software name" which then leads to Update Unit 36 shown in Figure 6 illustrated below.

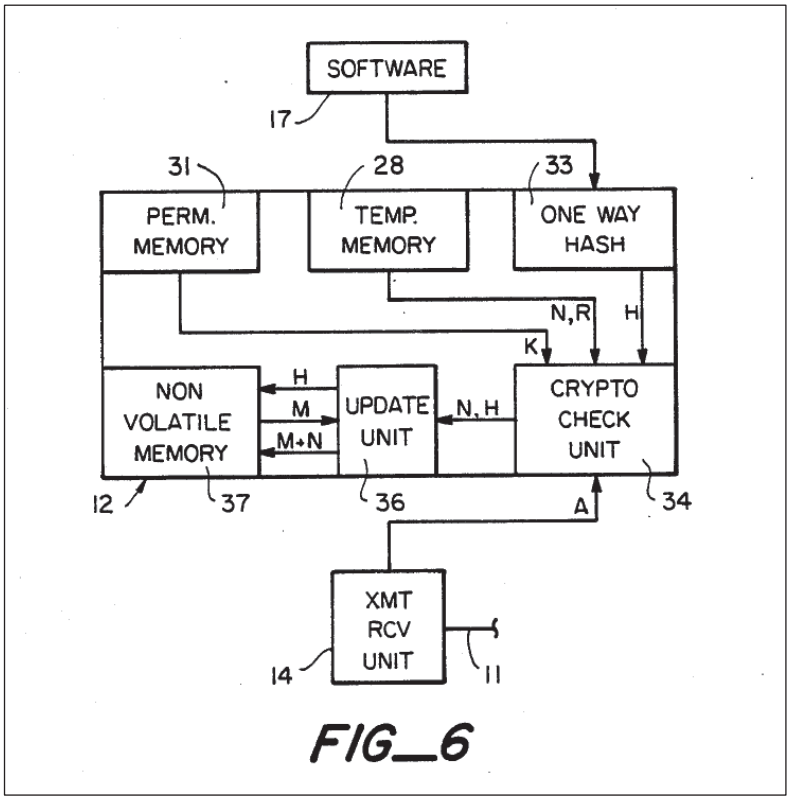

FIG_6

A POSITA would understand that Hellman's use of the word "software" refers to the software package being authorized for use a given number of times by a base unit. (Ex. 2015, Martin Declaration at ¶93.) A POSITA would not agree that Hellman discloses the recited "software program or routine" (agent) that is used to set up a verification structure. The Wolfe Declaration simply speculates that the update unit 36 *may* be a software routine that potentially operates along with a hardware module—but identifies nothing in Hellman to support that proposition. (Ex. 1003 at ¶137, Wolfe Declaration.) There is a reason. The Wolfe Declaration states that "***Hellman does not specifically disclose how update unit 36 is implemented.***" *Id.*

And to be clear, Dr. Wolfe actually misrepresents Hellman. Hellman does not disclose how "update unit 36 is implemented —making clear that "update unit 36" is a hardware unit connected by "wires" to "switches." (Ex. 2015, Martin Declaration at ¶94.) Hellman even confirms that data is "***stored in***" the update unit 36, which a POSITA would further understand as confirming that the update unit 36 is not a "software program or routine," but rather something with memory, like a processor. (Ex. 2015, Martin Declaration at ¶94.)

Accordingly, a POSITA would understand Hellman as teaching away from implementing its invention in software. (Ex. 2015, Martin Declaration at ¶95.) Indeed, Hellman discusses authorization in the context of the record industry, but then confirms "***[s]oftware copy protection does not currently exist in the record industry.***" (Ex. 1004, Hellman at 1:28-29.) Based on Hellman's disclosure (and its embodiment with respect to the record industry), a POSITA would understand the base unit is not a general-purpose computer and that the agent is implemented exclusively in specialized *hardware*—the opposite of the '941 Patent's invention, which requires the presence of both BIOS and an OS-level *software* agent. (Ex. 2015, Martin Declaration at ¶¶95-96.)

To adapt and implement Hellman using software alone, a POSITA would need to design a software solution that could isolate and protect itself from the very software packages whose authorization is at issue. (Ex. 2015, Martin Declaration at

¶97.) But, the solution to this problem not only is complicated, but would result in wildly different designs to address problems of software isolation. (Ex. 2015, Martin Declaration at ¶97.)

And importantly, while Ancora proposes the proper construction of "agent" is "software module or routine" (*see* Ex. 1012; Ex. 1013), Sony presents a widely divergent construction to the district court. Sony should not be permitted to pursue a Joinder Petition based on one construction, then pursue completely contrary constructions in the district court. *OrthoPediatrics Corp. v. K2M, Inc.*, IPR2018-01548, Paper 9, p. 11 (PTAB March 1, 2019).

IX. Conclusion

Because of Petitioner's inconsistent constructions asserted in the district court, and because cited prior art fails to disclose key features of the claimed invention such as "using an agent to set up a verification structure in the erasable, non-volatile memory of the BIOS," the Board should deny the Joinder Petition for *inter partes* review of the '941 Patent.[7]

---

[7] Because Petitioner does not argue that the Schneck reference discloses the critical "using an agent to set up a verification structure in the erasable, non-volatile memory of the BIOS" limitation, Ancora does not address that reference in this Preliminary Response.

Respectfully submitted,

Dated: April 23, 2021

/John P. Rondini/

John P. Rondini (Reg. No. 64,949)
Marc Lorelli (Reg. No. 43,759)
BROOKS KUSHMAN P.C.
1000 Town Center, 22nd Floor
Southfield, MI 48075
(248) 358-4400

Nicholas T. Peters (Reg. No. 53,456)
David A. Gosse (Reg. No. 61,511)
Paul B. Henkelmann (Reg. No. 65,891)
FITCH, EVEN, TABIN
& FLANNERY LLP
120 South LaSalle Street, Suite 2100
Chicago, IL 60603
Telephone: (312) 577-7000

Attorneys for Patent Owner
Ancora Technologies Inc.

Certificate of Service

The undersigned hereby certifies that on April 23, 2021, a copy of **Patent Owner's Preliminary Response to Petition for *Inter Partes* Review and all Exhibits**, was served via electronic mail to litigation@lernerdavid.com; ggewirtz@lernerdavid.com; jdavid@lernerdavid.com which goes to the counsel of record listed below:

LEAD COUNSEL	BACK-UP COUNSEL
Gregory S. Gewirtz, Reg. No. 36,522 LERNER, DAVID, LITTENBERG, KRUMHOLZ & MENTLIK, LLP 20 Commerce Drive Cranford, NJ 07016 Tel: 908-654-5000 ggewirtz@lernerdavid.com	Jonathan A. David, Reg. No. 36,494 LERNER, DAVID, LITTENBERG, KRUMHOLZ & MENTLIK, LLP 20 Commerce Drive Cranford, NJ 07016 Tel: 908-654-5000 jdavid@lernerdavid.com litigation@lernerdavid.com

Respectfully submitted,

/John P. Rondini/
John P. Rondini (Reg. No. 64,949)
BROOKS KUSHMAN P.C.
1000 Town Center, 22nd Floor
Southfield, MI 48075
(248) 358-4400

Attorneys for Patent Owner
Ancora Technologies Inc.

Certificate of Compliance Pursuant to 37 C.F.R. §42.24

This paper complies with the type-volume limitation of 37 C.F.R. §42.24. The paper contains 7,030 words, excluding the parts of the paper exempted by §42.24(a).

This paper also complies with the typeface requirements of 37 C.F.R. §42.6(a)(ii) and the type style requirements of §42.6(a)(iii)&(iv).

Respectfully submitted,

Dated: April 23, 2021

/John P. Rondini/

John P. Rondini (Reg. No. 64,949)
BROOKS KUSHMAN P.C.
1000 Town Center, 22nd Floor
Southfield, MI 48075
(248) 358-4400

Attorneys for Patent Owner
Ancora Technologies Inc.