UNITED STATES PATENT AND TRADEMARK OFFICE
BEFORE THE PATENT TRIAL AND APPEAL BOARD

Patent Owner's Oral Hearing Demonstratives

NINTENDO CO., LTD., and NINTENDO OF AMERICA INC.,
Petitioner,

v.

ANCORA TECHNOLOGIES, INC.,
Patent Owner.

Case No. IPR2021-01338
Patent No. 6,411,941

October 3, 2022

Summary

The prior art "singly or collectively, do not teach licensed programs ***running at the OS level*** interacting with a program verification structure stored in the BIOS to verify the program using the verification structure and having a user act on the program according to the verification. . . . ***The present invention overcomes this difficulty by <u>using an agent</u> to set up a verification structure in the erasable, non-volatile memory of the BIOS***."

Sur-Reply 14; Response 19; Ex. 2011 ANCC000162

Summary

- Claim construction:
  "agent" requires "OS-level software program or routine"
  - Unambiguous statements during prosecution require this meaning
  - Affects every challenged claim

- Claims 1–3, 6–14, and 16:
  - Hellman does not disclose BIOS, operating system, or an "agent"
  - Petitioners misconstrue Chou's disclosure and functionality
  - Petitioners' expert relies on conclusory obviousness arguments
  - The alleged combination would be inoperative
  - Objective indicia evince non-obviousness of the '941 patent

Briefing on the Merits

Paper No.	Description
1	Nintendo's Petition
7	Ancora's Preliminary Response
9	Institution Decision
23	Ancora's Response
33	Nintendo's Reply
39	Ancora's Sur-Reply

’941 Patent

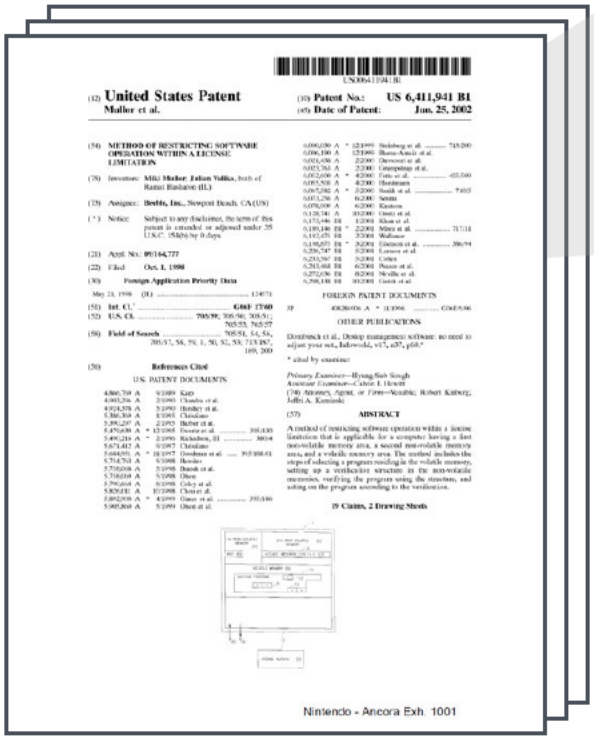

(54) **METHOD OF RESTRICTING SOFTWARE OPERATION WITHIN A LICENSE LIMITATION**

(75) Inventors: **Miki Mullor**; **Julian Valiko**, both of Ramat Hasharon (IL)

(73) Assignee: **Beeble, Inc.**, Newport Beach, CA (US)

Ex. 1001

- Inventor Miki Mullor
  - Founded multiple operating companies related to the ’941 patent

See Response 11, 66–67; Ex. 1001; Ex. 2011 ANCC000178–85; Ex. 2027; Ex. 2029

’941 Patent

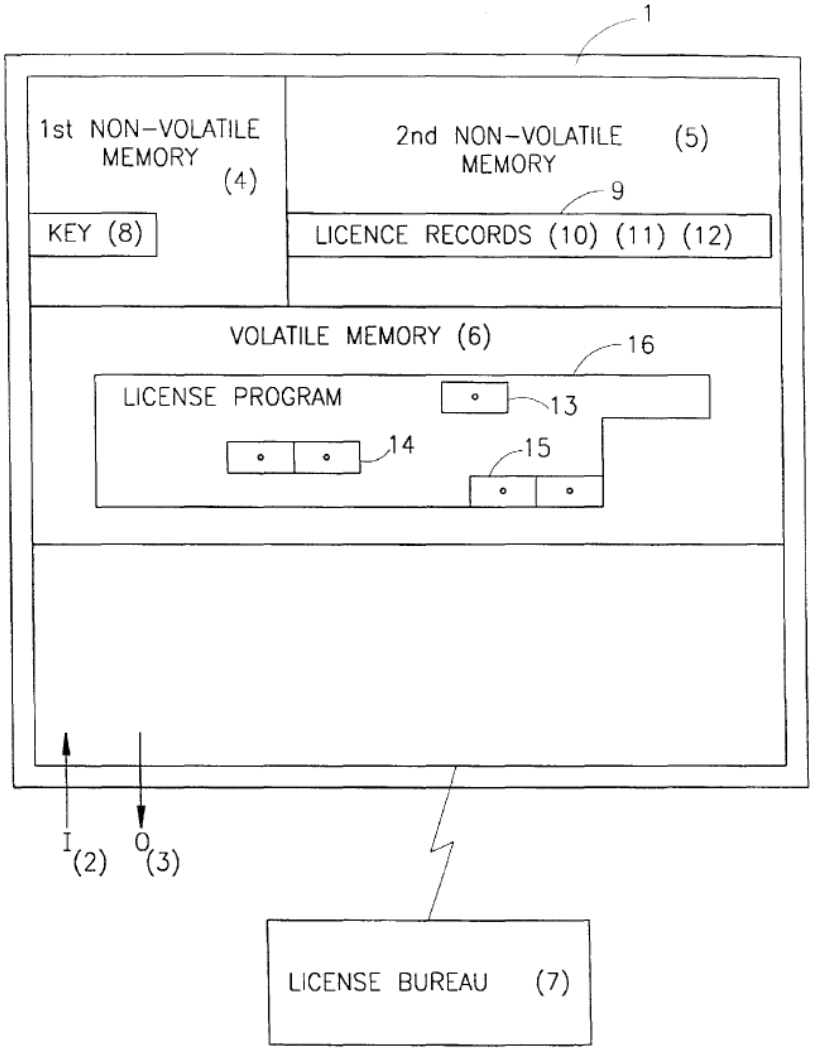

Ex. 1001 FIG. 1, cited at Response 4

Problem:

Known methods were inadequate

- Software-based methods were vulnerable to hackers and physical instabilities of computer hard disc
- Hardware-based methods required expensive, inconvenient dongles—incompatible with Internet-based software sales

Response 2–4; Ex. 1001 1:19–32

Solution:

Operating system interacts with existing BIOS memory

Response 4;
Ex. 2018 ¶¶61–65; Ex. 1001 FIG. 1, 1:45–47, 1:66–2:4, 5:10–27

’941 Patent

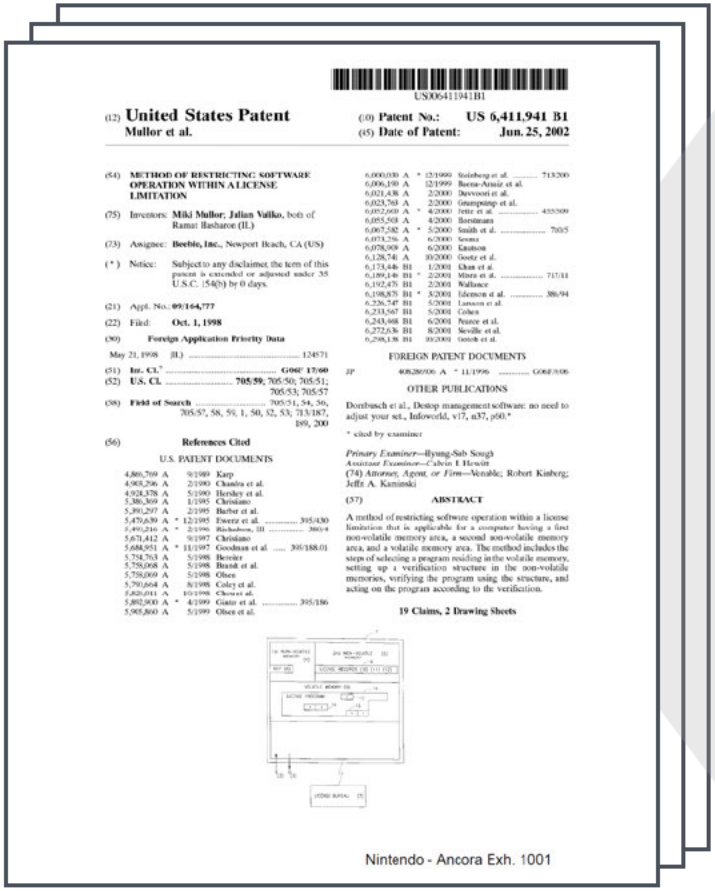

US006411941B1

(12) **United States Patent**
Mullor et al.

(10) **Patent No.: US 6,411,941 B1**
(45) **Date of Patent: Jun. 25, 2002**

(54) **METHOD OF RESTRICTING SOFTWARE OPERATION WITHIN A LICENSE LIMITATION**

(75) Inventors: **Miki Mullor**; **Julian Valiko**, both of Ramat Hasharon (IL)

(73) Assignee: **Beeble, Inc.**, Newport Beach, CA (US)

(*) Notice: Subject to any disclaimer, the term of this patent is extended or adjusted under 35 U.S.C. 154(b) by 0 days.

(21) Appl. No.: **09/164,777**

(22) Filed: **Oct. 1, 1998**

(30) **Foreign Application Priority Data**

May 21, 1998 (IL) 124571

(51) **Int. Cl.**[7] **G06F 17/60**

(52) **U.S. Cl.** **705/59**; 705/50; 705/51; 705/53; 705/57

(58) **Field of Search** 705/51, 54, 56, 705/57, 58, 59, 1, 50, 52, 53; 713/187, 189, 200

(56) **References Cited**

U.S. PATENT DOCUMENTS

4,866,769	A	9/1989	Karp	
4,908,296	A	2/1990	Chandra et al.	
4,928,378	A	5/1990	Hershey et al.	
5,386,369	A	1/1995	Christiano	
5,391,297	A	2/1995	Barber et al.	
5,479,639	A *	12/1995	Ewerz et al.	395/430
5,491,216	A *	2/1996	Richardson, III	380/4
5,671,412	A	9/1997	Christiano	
5,684,951	A *	11/1997	Goodman et al.	395/188.01
5,734,703	A	5/1998	Bereiter	
5,758,068	A	5/1998	Brandt et al.	
5,758,069	A	5/1998	Olsen	
5,790,664	A	8/1998	Coley et al.	
5,820,011	A	10/1998	Chaves et al.	
5,892,900	A *	4/1999	Ginter et al.	395/186
5,905,860	A	5/1999	Olsen et al.	
6,000,030	A *	12/1999	Steinberg et al.	713/200
6,006,190	A	12/1999	Baena-Arnaiz et al.	
6,021,438	A	2/2000	Duvvoori et al.	
6,023,765	A	2/2000	Gunaptinap et al.	
6,052,660	A *	4/2000	Pette et al.	455/509
6,055,508	A	4/2000	Borsmann	
6,067,582	A *	5/2000	Smith et al.	705/5
6,073,256	A	6/2000	Sesma	
6,078,909	A	6/2000	Knutson	
6,128,741	A	10/2000	Goetz et al.	
6,173,446	B1	1/2001	Khan et al.	
6,189,146	B1 *	2/2001	Misra et al.	717/11
6,192,475	B1	2/2001	Wallace	
6,198,875	B1 *	3/2001	Idenson et al.	386/94
6,226,747	B1	5/2001	Lamson et al.	
6,233,567	B1	5/2001	Cohen	
6,243,468	B1	6/2001	Pearce et al.	
6,272,636	B1	8/2001	Neville et al.	
6,298,138	B1	10/2001	Gotsch et al.	

FOREIGN PATENT DOCUMENTS

JP 408286906 A * 11/1996 ..... G06F3/06

OTHER PUBLICATIONS

Dornbusch et al., Destop management software: no need to adjust your set., Infoworld, v17, n37, p60.*

* cited by examiner

Primary Examiner—Hyung-Sub Sough
Assistant Examiner—Calvin I. Hewitt
(74) *Attorney, Agent, or Firm*—Venable; Robert Kinberg; Jeffe A. Kaminski

(57) **ABSTRACT**

A method of restricting software operation within a license limitation that is applicable for a computer having a first non-volatile memory area, a second non-volatile memory area, and a volatile memory area. The method includes the steps of selecting a program residing in the volatile memory, setting up a verification structure in the non-volatile memories, verifying the program using the structure, and acting on the program according to the verification.

19 Claims, 2 Drawing Sheets

Nintendo - Ancora Exh. 1001

Thus, consider a conventional computer having a conventional BIOS module in which a key was embedded at the ROM section thereof, during manufacture. The key constitutes, effectively, a unique identification code for the host computer. It is important to note that the key is stored in a non-volatile portion of the BIOS, i.e. it cannot be removed or modified.

Further, according to the invention, each application program that is to be licensed to run on the specified computer, is associated with a license record; that consists of author name, program name and number of licensed users (for network). The license record may be held in either encrypted or explicit form.

Now, there commences an initial license establishment procedure, where a verification structure is set in the BIOS so as to indicate that the specified program is licensed to run on the specified computer. This is implemented by encrypting the license record (or portion thereof) using said key (or portion thereof) exclusively or in conjunction with other identification information) as an encryption key. The resulting encrypted license record is stored in another (second) non-volatile section of the BIOS, e.g. E^2PROM (or the ROM). It should be noted that unlike the first non-volatile section, the data in the second non-volatile memory may optionally be erased or modified (using E^2PROM manipulation commands), so as to enable to add, modify or remove licenses. The actual format of the license may include a string of terms that correspond to a license registration entry (e.g. lookup table entry or entries) at a license registration bureau (which will be further described as part of the preferred embodiment of the present invention).

Ex. 1001, at 1:45–2:9

’941 Patent: Claim 1

1. A method of restricting software operation within a license for use with a computer including an erasable, non-volatile memory area of a BIOS of the computer, and a volatile memory area; the method comprising the steps of:

selecting a program residing in the volatile memory,

using an agent to set up a ***verification structure*** in the ***erasable, non-volatile memory of the BIOS***, the verification structure accommodating ***data that includes at least one license record***,

verifying the program using at least the verification structure from the erasable non-volatile memory of the BIOS, and

acting on the program according to the verification.

Response 6–7; Ex. 1001 at 6:59–7:4

Claim Interpretation

- Plain Meaning of “Agent” Requires a “Software Program or Routine”
- Applicant and Examiner Understood that “Agent” Must Be “OS Level”

"Agent" Distinguishes the Prior Art

Ancora's Proposed Construction
"OS-level software program or routine" Response 32

Parties agree:

"Agent" was critical to the Examiner when allowing the claims.

Petition 19; Response 57; Reply 12

Prosecution and Reexamination:

Prior art does not disclose or suggest the claimed "agent."

Sur-Reply 14; Response 19, 25–26; Ex. 2011 ANCC000162; *see* Ex. 2001 249–50

Disputes Over "Agent"

Ancora's Proposed Construction
"OS-level software program or routine" Response 32

Ancora:

Plain meaning of "agent" is "software program or routine"

Response 32–33; Sur-Reply 2–5

OS-level clearly and unmistakably required by prosecution history

Response 33–35; Sur-Reply 7–10

Petitioners:

Oppose "OS-level" ***or*** "software-only" – but offer no competing interpretation of "agent"

Reply 3, 15

Caselaw Binds Applicant to Arguments on "Agent"

Ancora's Proposed Construction
"OS-level software program or routine" Response 32

Petitioners do not distinguish cases cited by Ancora.

See Reply 3–7

Examiner's statement of reasons for allowance binds applicants to their arguments.

Kaken Pharma. Co., Ltd. v. Iancu, 952 F.3d 1346, 1354 (Fed. Cir. 2020), cited at Response 31–35;

Unambiguous statements in prosecution history define language in the claims.

Rembrandt Wireless Techs., LP v. Samsung Elecs. Co., Ltd., 853 F.3d 1370, 1376 (Fed. Cir. 2017), cited at Response 31, 33–35;

Kaken Pharma. Co., 952 F.3d 1346

Statements made to convince the examiner of patentability, followed by an examiner's concomitant action based on the statement, bind the applicant.

Kaken Pharma. Co., Ltd. v. Iancu, 952 F.3d 1346, 1354 (Fed. Cir. 2020), cited at Response 31

Applicant argued "onychomycosis . . . specifically affects the nail plate" and the "present invention" included the medication's unexpected ability to "penetrate the nail."

Id. at 1353–54, cited at Response 31

Examiner issued allowance, noting the method required applying medication such that it "penetrates through the nail plate."

Id. at 1354, cited at Response 31–32

"Treating a subject having onychomycosis" was therefore bound to applicant's arguments, requiring "penetrating the nail plate to treat a fungal infection inside the nail plate or in the nail bed under it."

Id., cited at Response 32

Rembrandt Wireless, 853 F.3d 1370

Unambiguous statements in prosecution history define language in the claims.

Rembrandt Wireless Techs., LP v. Samsung Elecs. Co., Ltd.,
853 F.3d 1370, 1376 (Fed. Cir. 2017),
cited at Response 31, 33–35

Applicants' remarks stated that "different types" would "refer to two types of modulation methods, i.e., different families of modulation techniques . . .."

Rembrandt Wireless, 853 F.3d at 1376,
cited at Response 31

Federal Circuit therefore held that "different types" required "different families of modulation techniques . . .."

Id.,
cited at Response 31

Distinctions in Petitioners' Caselaw on "Agent"

Ancora's Proposed Construction
"OS-level software program or routine" Response 32

"Disavowal" cases cited by Petitioners do not preclude Ancora's construction.

Sur-Reply 7–10; *see* Reply 3–7

Ancora cites both applicant's arguments and the Examiner's statement of reasons for allowance—unlike *MIT*, where defendant did not cite ***any*** prosecution history.

Sur-Reply 7;
Mass. Inst. of Tech. v. Shire Pharms., Inc., 839 F.3d 1111, 1119 (Fed. Cir. 2016)

Only one reasonable interpretation exists here—unlike *Intellectual Ventures*.

Sur-Reply 7–10;
Intellectual Ventures I LLC v. T-Mobile USA, Inc., 902 F.3d 1372, 1380 (Fed. Cir. 2018)

Applicant's Remarks Related to "Agent"

Ancora's Proposed Construction
"OS-level software program or routine" Response 32

Applicants' February 5, 2002 remarks addressed the "***set up" step performed by the claimed agent***—not the "selecting," "verifying," or "acting on" steps.

Sur-Reply 8–9; Response 34–36

1. Cited references "do not teach or suggest, among other things, ***storing a verification structure***, such as a software license information, in the BIOS of a computer as is recited in the present claim."
2. No motivation to combine Ewertz with Misra's OS-level ***license generator*** because "BIOS and OS level programs are normally mutually exclusive."
3. "There is no OS support whatsoever to ***write*** data to the system BIOS" and lack of a BIOS file system "is further evidence that OS level application programmers would not consider the BIOS as a ***storage medium*** for license data."
4. "Misra teaches away from using the BIOS as a local ***storage area*** for licenses."

Sur-Reply 8; Ex. 2011 at ANCC000151, 153–55

February 5, 2002 Amendment

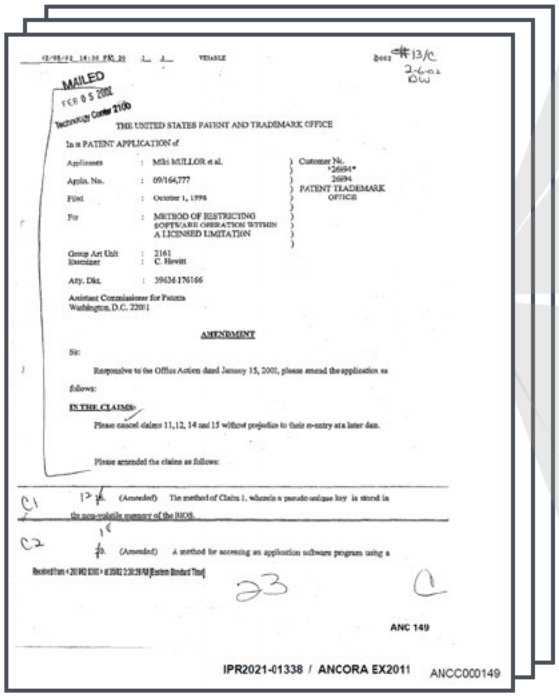

MAILED
FEB 05 2002
Technology Center 2100

THE UNITED STATES PATENT AND TRADEMARK OFFICE

In re PATENT APPLICATION of

Applicants	: Miki MULLOR et al.	Customer No. *26694* 26694 PATENT TRADEMARK OFFICE
Appln. No.	: 09/164,777	
Filed	: October 1, 1998	
For	: METHOD OF RESTRICING SOFTWARE OMERATION WITHIN A LICENSED LIMITATION	
Group Art Unit	: 2161	
Examiner	: C. Hewitt	
Atty. Dkt.	: 39636-176166	

Assistant Commissioner for Patents
Washington, D.C. 22013

AMENDMENT

Sir:

Responsive to the Office Action dated January 15, 2001, please amend the application as follows:

IN THE CLAIMS:

Please cancel claims 11,12, 14 and 15 without prejudice to their re-entry at a later date.

Please amended the claims as follows:

C1 12. (Amended) The method of Claim 1, wherein a pseudo-unique key is stored in the non-volatile memory of the BIOS.

C2 13. (Amended) A method for accessing an application software program using a

ANC 149

IPR2021-01338 / ANCORA EX2011 ANCC000149

The cited references do not render the present invention obvious as they do not teach or suggest, among other things, storing a verification structure, such as a software license information, in the BIOS of a computer as is recited in the present claims.

Ex. 2011 ANCC000151

level programs. Therefore, BIOS programs and software licensing management applications do not ordinarily interact or communicate because when BIOS is running, the computer is in a configuration mode, hence OS is not running. Thus, BIOS and OS level programs are normally mutually exclusive.

Ex. 2011 ANCC000153

person skilled in the art makes use of OS features to write date to storage mediums. There is no OS support whatsoever to write data to the system BIOS. Therefore, an ordinary person skilled

writable device. No such file system is associated with the BIOS. This is further evidence that OS level application programmers would not consider the BIOS as a storage medium for license data.

Ex. 2011 ANCC000154

Since all computers must have a BIOS, it is clear Misra teaches away from using the BIOS as a local storage area for licenses.

Ex. 2011 ANCC000155

Examiner's Statement Defined "Agent"

Ancora's Proposed Construction
"OS-level software program or routine" Response 32

Examiner's February 20, 2002 reasons for allowance cite "using an ***agent*** to set up a verification structure" as overcoming prior art.

Sur-Reply 9; Response 34–35; Ex. 2011 at ANCC000161–62

"However, the key distinction between the present invention and the closest prior art, is that the Misra et al., and Ginter et al. systems and the Ewertz et al. system run at the operating system level and BIOS level, respectively. More specifically, the closest prior art systems, singly or collectively, ***do not teach licensed programs running at the OS level <u>interacting with a program verification structure</u> stored in the BIOS*** to verify the program using the verification structure and having a user act on the program according to the verification. Further, it is well known to those of ordinary skill of the art that ***a computer BIOS is not setup to <u>manage</u> a software license verification structure***. ***The present invention overcomes this difficulty by <u>using an agent to set up a verification structure</u> in the erasable, non-volatile memory of the BIOS***."

Ex. 2011 at ANCC000162; Sur-Reply 9–10

February 20, 2002 Notice of Allowability

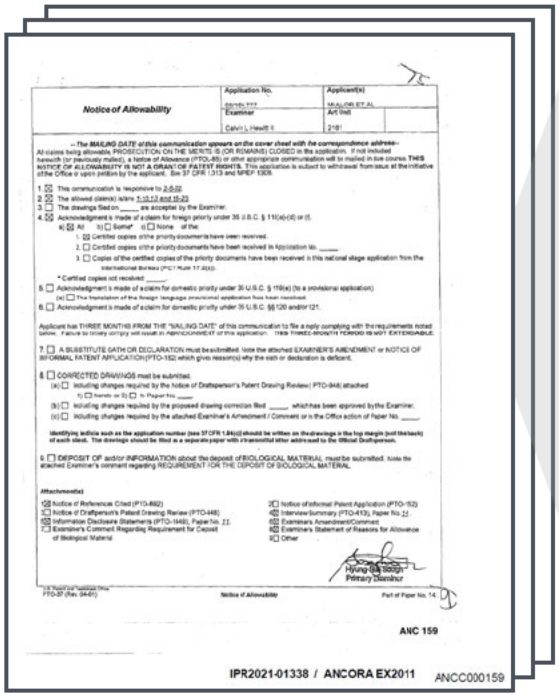

Notice of Allowability

Application No. 09/191,777 | Applicant(s) MULLOR ET AL.

Examiner Calvin L. Hewitt II | Art Unit 2161

-- The MAILING DATE of this communication appears on the cover sheet with the correspondence address--

All claims being allowable, PROSECUTION ON THE MERITS IS (OR REMAINS) CLOSED in the application. If not included herewith (or previously mailed), a Notice of Allowance (PTO-85) or other appropriate communication will be mailed in due course. THIS NOTICE OF ALLOWABILITY IS NOT A GRANT OF PATENT RIGHTS. This application is subject to withdrawal from issue at the initiative of the Office or upon petition by the applicant. See 37 CFR 1.313 and MPEP 1308.

1. ☒ This communication is responsive to 2-5-02
2. ☒ The allowed claim(s) is/are 1-10,12 and 15-23
3. ☐ The drawings filed on ____ are accepted by the Examiner.
4. ☒ Acknowledgment is made of a claim for foreign priority under 35 U.S.C. § 119(a)-(d) or (f).
   a) ☒ All b) ☐ Some* c) ☐ None of the:
      1. ☒ Certified copies of the priority documents have been received.
      2. ☐ Certified copies of the priority documents have been received in Application No. ____
      3. ☐ Copies of the certified copies of the priority documents have been received in this national stage application from the International Bureau (PCT Rule 17.2(a)).
   * Certified copies not received ____
5. ☐ Acknowledgment is made of a claim for domestic priority under 35 U.S.C. § 119(e) (to a provisional application).
   (a) ☐ The translation of the foreign language provisional application has been received.
6. ☐ Acknowledgment is made of a claim for domestic priority under 35 U.S.C. §§ 120 and/or 121.

Applicant has THREE MONTHS FROM THE "MAILING DATE" of this communication to file a reply complying with the requirements noted below. Failure to timely comply will result in ABANDONMENT of this application. THIS THREE-MONTH PERIOD IS NOT EXTENDABLE.

7. ☐ A SUBSTITUTE OATH OR DECLARATION must be submitted. Note the attached EXAMINER'S AMENDMENT or NOTICE OF INFORMAL PATENT APPLICATION (PTO-152) which gives reason(s) why the oath or declaration is deficient.

8. ☐ CORRECTED DRAWINGS must be submitted.
   (a) ☐ Including changes required by the Notice of Draftsperson's Patent Drawing Review (PTO-948) attached
      1) ☐ hereto or 2) ☐ to Paper No. ____
   (b) ☐ Including changes required by the proposed drawing correction filed ____, which has been approved by the Examiner.
   (c) ☐ Including changes required by the attached Examiner's Amendment / Comment or in the Office action of Paper No. ____

Identifying indicia such as the application number (see 37 CFR 1.84(c)) should be written on the drawings in the top margin (not the back) of each sheet. The drawings should be filed as a separate paper with a transmittal letter addressed to the Official Draftsperson.

9. ☐ DEPOSIT OF and/or INFORMATION about the deposit of BIOLOGICAL MATERIAL must be submitted. Note the attached Examiner's comment regarding REQUIREMENT FOR THE DEPOSIT OF BIOLOGICAL MATERIAL.

Attachment(s)

1☒ Notice of References Cited (PTO-892)
2☐ Notice of Informal Patent Application (PTO-152)
3☐ Notice of Draftperson's Patent Drawing Review (PTO-948)
4☒ Interview Summary (PTO-413), Paper No. 14.
5☒ Information Disclosure Statements (PTO-1449), Paper No. 11.
6☒ Examiner's Amendment/Comment
7☐ Examiner's Comment Regarding Requirement for Deposit of Biological Material
8☒ Examiner's Statement of Reasons for Allowance
9☐ Other

Hyung-Sub Sough
Primary Examiner

U.S. Patent and Trademark Office
PTO-37 (Rev. 04-01) Notice of Allowability Part of Paper No. 14

ANC 159

IPR2021-01338 / ANCORA EX2011 ANCC000159

Ewertz et al. (US 5,479,639) teach the use of BIOS memory for storing licensing numbers. Hence, it appears initially, that to one of ordinary skill of the art, the combination of Ewertz et al. with either Ginter et al. and/or Misra et al., would render the present invention obvious. However, the key distinction between the present invention and the closest prior art, is that the Misra et al., and Ginter et al. systems and the Ewertz et al. system run at the operating system level and BIOS level, respectively. More specifically, the closest prior art systems, singly or collectively, do not teach licensed programs running at the OS level interacting with a program verification structure stored in the BIOS to verify the program using the verification structure and having a user act on the program according to the verification. Further, it is well known to those of ordinary skill of the art that a computer BIOS is not setup to manage a software license verification structure. The present invention overcomes this difficulty by using an agent to set up a verification structure in the erasable, non-volatile memory of the BIOS.

Ex. 2011 ANCC000162

Dictionaries Define Plain Meaning of "Agent"

Ancora's Proposed Construction
"OS-level software program or routine" Response 32

Dictionary definitions establish the plain meaning of "agent" as a "software program or routine."

Response 33; Sur-Reply 2; Ex. 2018 ¶¶126, 133

"An agent is a program, which, with a certain degree of autonomy, performs tasks on behalf of a user or an application. . . . "

Ex. 2007 at 2-11

"agent *n.* 1. A program that performs a background task . . . 2. A program that searches . . . 3. In client/server applications, a process that mediates . . . 4. In Simple Network Management Protocol, a program that monitors . . . "

Ex. 2008 at 13; Ex. 2009 at 18–19 (same)

"A software routine that waits in the background and performs an action when a specified event occurs. . . . "

Ex. 2010 at 1

Hardware Is not Within Plain Meaning of "Agent"

Ancora's Proposed Construction
"OS-level software program or routine" Response 32

Plain meaning of "agent" excludes hardware in the context of the '941 patent, which distinguishes hardware-based products.

Sur-Reply 2–3; Ex. 1001 1:27–35; Ex. 2018 ¶61

Petitioners' Oxford Dictionary of Computing offers only that:
"A ***robot*** (see robotics) is an example of an agent that perceives its physical environment through sensors and acts through effectors."

Ex. 1038 at 4; Sur-Reply 2

Davis patent uses "hardware agent" to describe an integrated circuit component—NOT "agent."

E.g., Ex. 1039 3:1–10, 8:55–9:12; Sur-Reply 3

"Verifying Software" Includes the "Agent"

Ancora's Proposed Construction
"OS-level software program or routine" Response 32

Federal Circuit held only that: "the applicants were clear that the OS-level language referred to the verifying software."

Response 35–36; Sur-Reply 9–10
Ancora Techs., Inc. v. Apple, Inc., 744 F.3d 732, 735–37 (Fed. Cir. 2014)

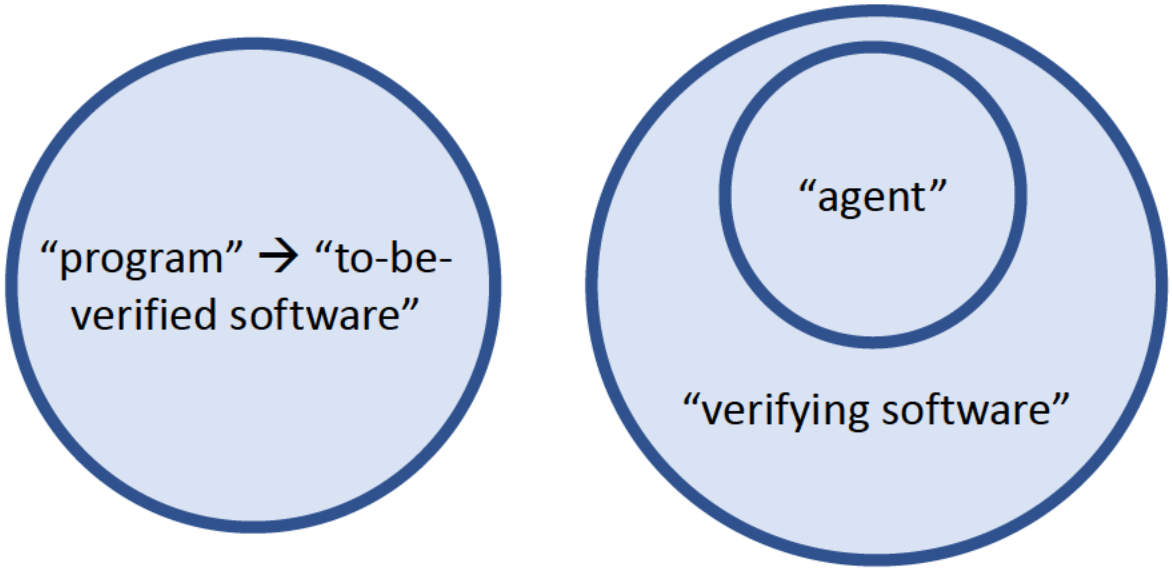

Patentability
Claims 1–3, 6–14, and 16

- Petition Misinterprets Teachings in Hellman and Chou
- Asserted Motivations Are Not Supported
- Substantial Objective Indicia of Non-Obviousness Precludes Unpatentability

Relevant Law: Motivation to Combine

References must be considered for all that they teach—both the reasons for and against the proposed modifications.

See In re Dow Chem. Co., 837 F.2d 469, 473 (Fed. Cir. 1988)

It is not enough to show that multiple references "***could be*** combined."

Personal Web Techs., LLC v. Apple, Inc., 848 F.3d 987, 993–94 (Fed. Cir. 2017) (emphasis in original) ;
Response 50, 61

Conclusory statements of obviousness will not suffice.

In re NuVasive, 842 F.3d 1376, 1383 (Fed. Cir. 2016);
Activevideo Networks, Inc. v. Verizon Commc'ns, Inc., 694 F.3d 1312, 1327 (Fed. Cir. 2012);
Response 51

"Care must be taken to avoid hindsight reconstruction by using the patent in suit as a guide through the maze of prior art references. . . . This kind of piecemeal analysis is precisely the kind of hindsight that the Board must not engage in."

In re NTP, Inc., 654 F.3d 1279, 1299 (Fed. Cir. 2011);
Response 50, 61–62

Hellman

Hellman discloses a hardware-implemented system, missing OS, BIOS, and "agent."

Response 60; Ex. 2018 ¶¶164–71

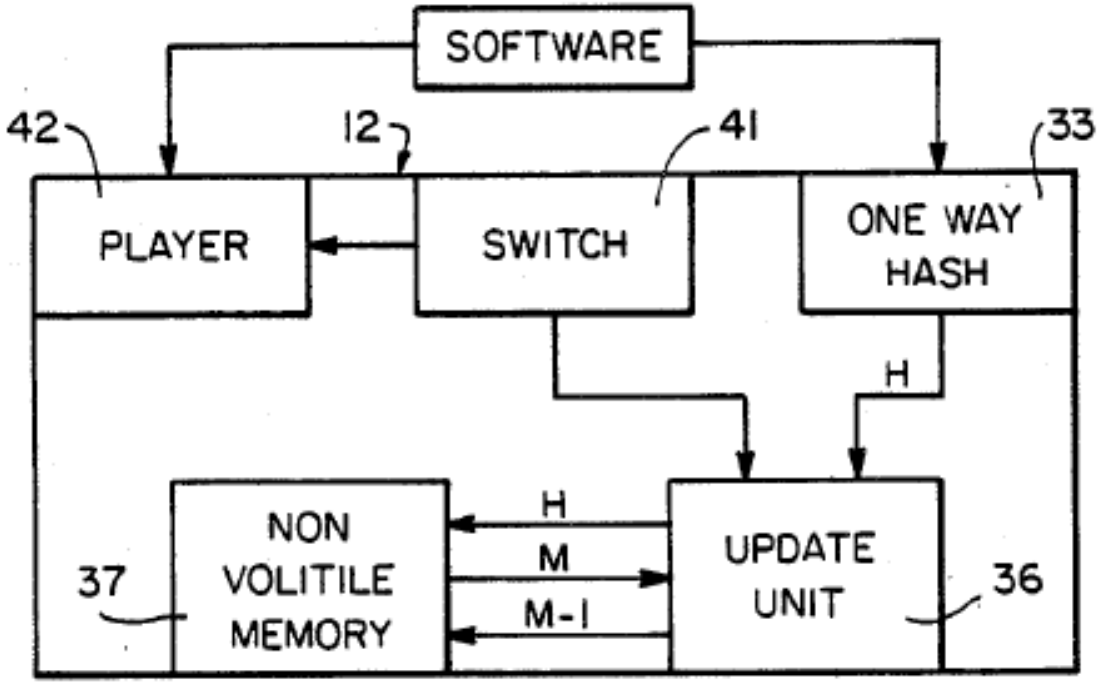

FIG_8

Response 41; Ex. 1004 FIG. 8

Petitioners' and Dr. Wolfe's Assumptions

- Hellman's "computer" has a BIOS and an operating system (OS)

  Reply 11–12; *but see* Sur-Reply 14–15; Response 43; Ex. 2018 ¶143; Ex. 1003 ¶105

- Hellman's update unit 36 is implemented in software running on the microprocessor or CPU embodiment of Hellman's software player 42.

  Reply 11, 17; *but see* Sur-Reply 12–14; Response 60; Ex. 2018 ¶¶164–71

- The software-implemented update unit 36 is an OS-level agent and/or Hellman's software package 17 runs at the OS level.

  Reply 13–14; *but see* Sur-Reply 15–16; Response 60–61

- Hellman's software player 42 is modified to allow a software-based update unit 36 to run before the processor is "activated" by the software-based update unit 36.

  Reply 18; Ex. 1033 ¶¶22–25; *but see* Response 60; Sur-Reply 16

- Hellman's EEPROM 37 is replaced with or modified to include Chou's BIOS, with a verification structure ***in the memory of the BIOS***, and data including a license record

  Petition 40–41; Reply 19–23; *but see* Response 52–55; Sur-Reply 18–19; Ex. 2018 ¶¶191–92

Petitioners' and Dr. Wolfe's Assumptions

Hellman's "computer" has a BIOS and an operating system (OS)

Reply 11–12; *but see* Sur-Reply 14–15; Response 43; Ex. 2018 ¶143; Ex. 1003 ¶105

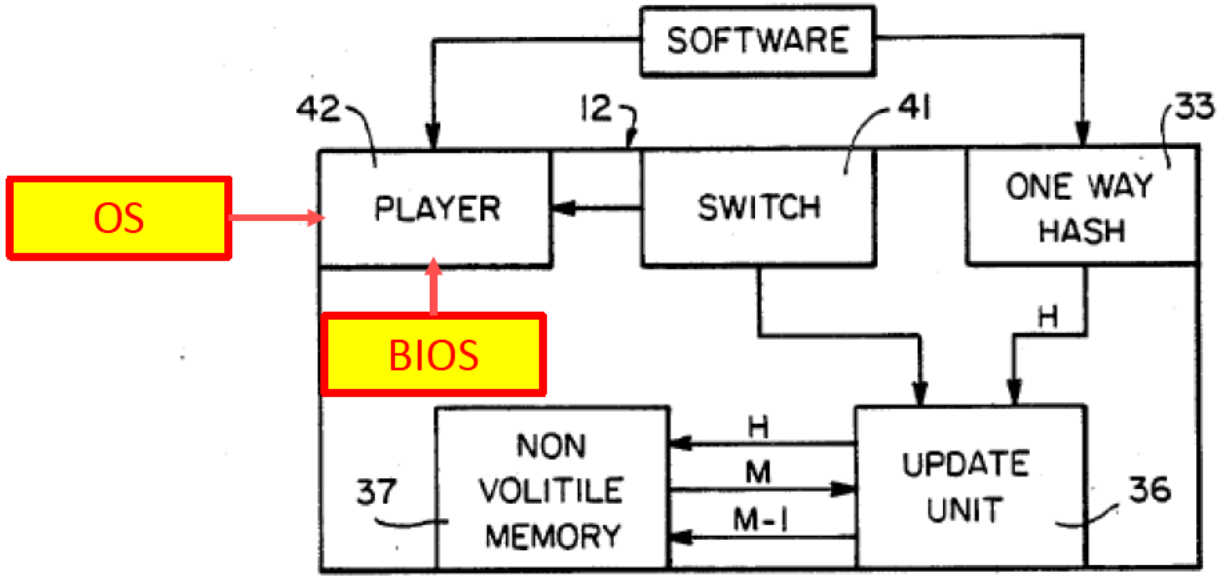

FIG_8

Ex. 1004 FIG. 8 (demonstrative annotations added)

Hellman

Both experts agree:
Hellman does not expressly recite BIOS, operating system ("OS"), or OS-level software.

Sur-Reply 14–15; Response 43; Ex. 2018 ¶143; Ex. 1003 ¶105; *see also* Ex. 1033 ¶28

Petitioner's Expert, Dr. Wolfe:

- "There were certainly things that ran an ordinary Intel microprocessor on an ordinary Intel mother board that did not run an operating system" and further "there are all kinds of computers for home use."

  Ex. 2026 33:7–25

- Does not identify any "application" or "OS-level" software disclosed by Hellman.

  Sur-Reply 15; *See* Ex. 1033 ¶¶28–30

- Instead of evidence: he "would assume" a computer has an operating system.

  Sur-Reply 15; Ex. 1033 ¶28 (quoting his own testimony at Ex. 2026 31:24–25)

- Leaps from "operating systems were known," to "Hellman's system is already ***implementable*** on an OS-based system."

  Ex. 1033 ¶29

Petitioners' and Dr. Wolfe's Assumptions

Hellman's update unit 36 is implemented in software running on the microprocessor or CPU embodiment of Hellman's software player 42.

Reply 11, 17; *but see* Sur-Reply 12–14; Response 60; Ex. 2018 ¶¶164–71

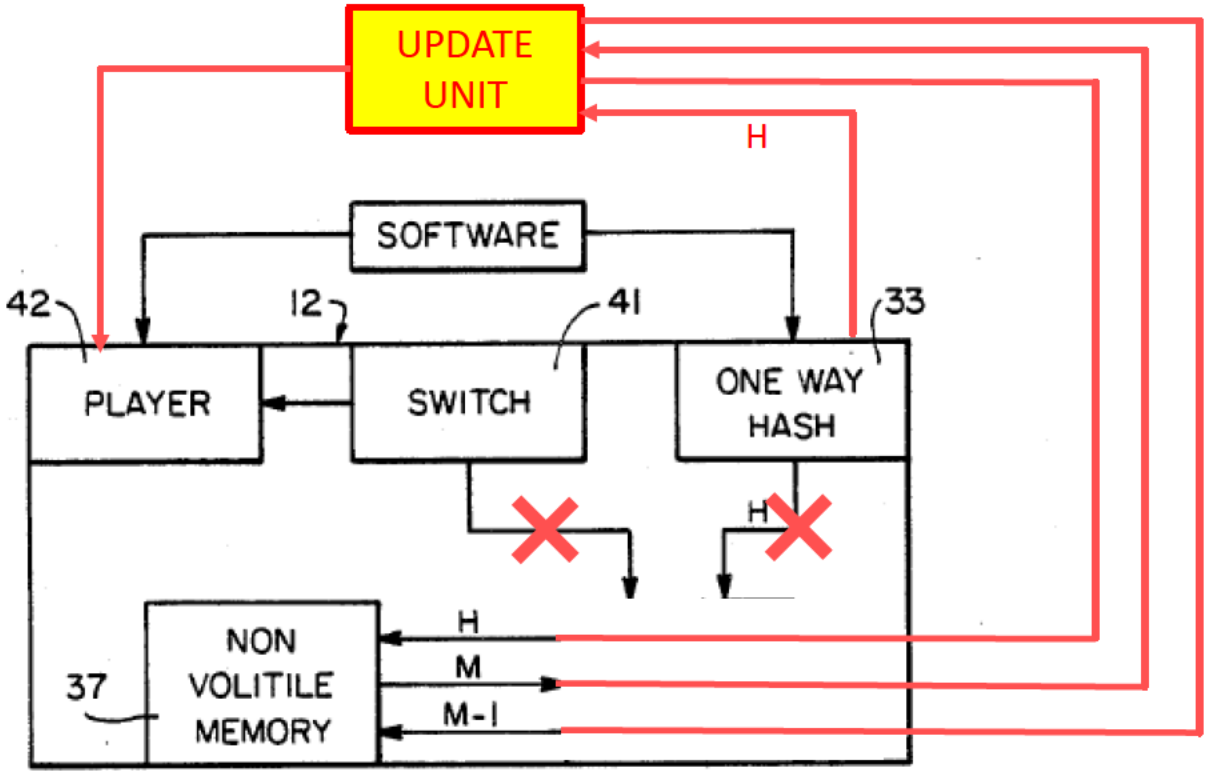

FIG_8

Ex. 1004 FIG. 8 (demonstrative annotations added)

Petitioners' and Dr. Wolfe's Assumptions

Hellman's software player 42 is modified to allow a software-based update unit 36 to run before the processor is "activated" by the software-based update unit 36.

Reply 18; Ex. 1033 ¶¶22–25; *but see* Response 60; Sur-Reply 16

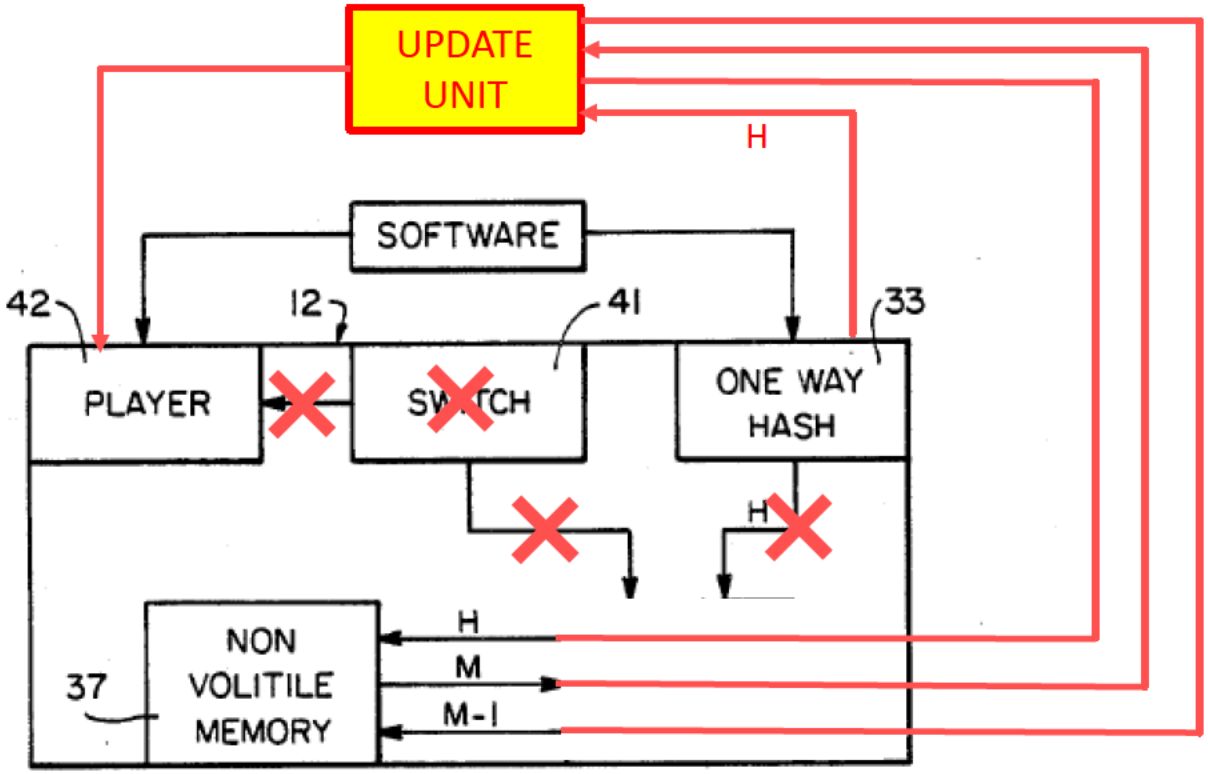

FIG_8

Ex. 1004 FIG. 8 (demonstrative annotations added)

Petitioners' and Dr. Wolfe's Assumptions

The software-implemented update unit 36 is an OS-level agent and/or Hellman's software package 17 runs at the OS level.

Reply 13–14; *but see* Sur-Reply 15–16; Response 60–61

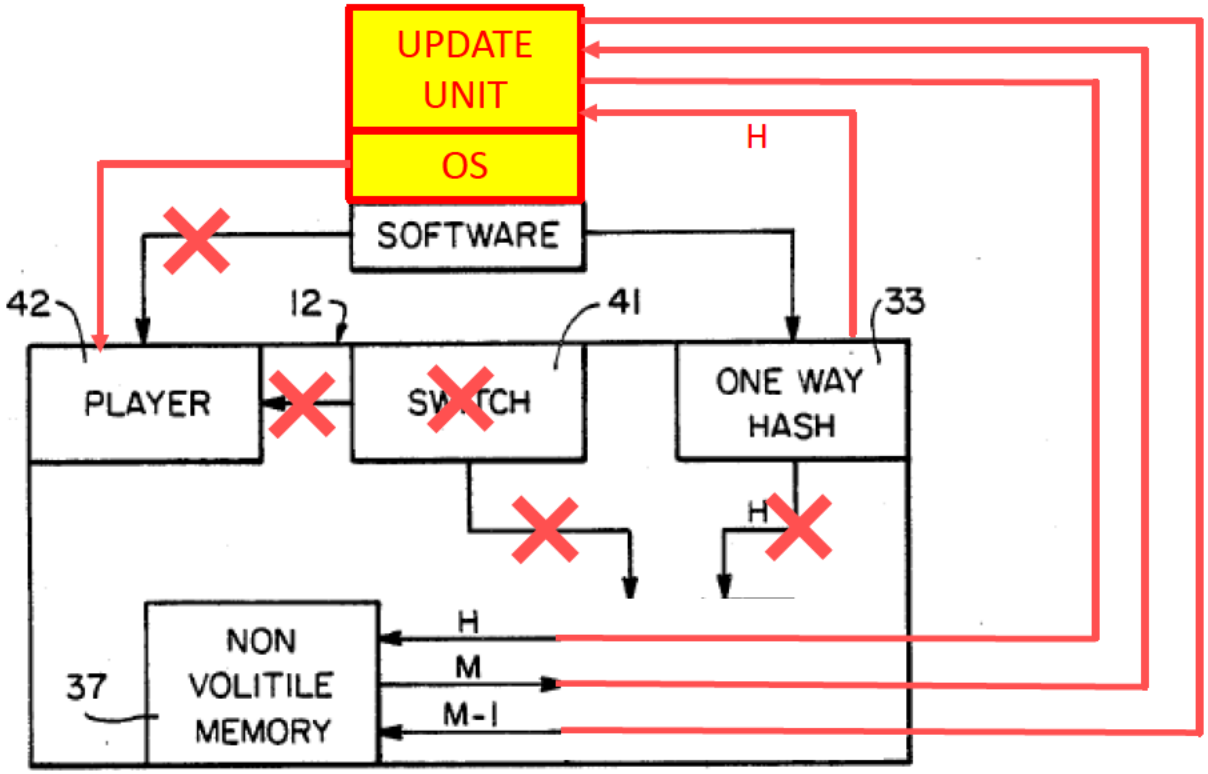

FIG_8

Ex. 1004 FIG. 8 (demonstrative annotations added)

Hellman

Hellman discloses a hardware-implemented system.

Response 60; Ex. 2018 ¶¶164–71

<u>Petitioner's Expert, Dr. Wolfe</u>:

Hellman does not "specifically disclose how update unit 36 is implemented."

Response 60; Ex. 1003 ¶137; *see also* Ex. 1003 ¶138A

<u>Ancora's Expert, Dr. Martin</u>:

Undisputed evidence of hardware:

- Wire sending control signal from update unit 36 to software player 42
- Epoxy to encapsulate switch 41 and the wire
- Factory seals or a dab of paint
- "Signals" representing K, N, R, H, C, A

Response 60; Ex. 2018 ¶¶164–66

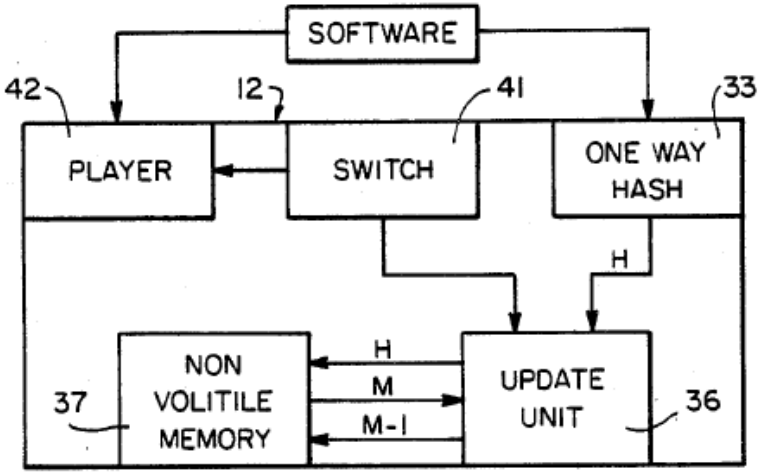

FIG_8

Response 41; Ex. 1004 FIG. 8

Schneck

Schneck discloses a hardware-implemented system designed to destroy data if physical intrusion is detected.

Response 46–48; Ex. 1006 FIG. 8, 9:46–59; 15:51–16:19, 16:49–59

Hardware-protected access mechanism 114 prevents tampering.

Response 54; Ex. 1006 15:51-63

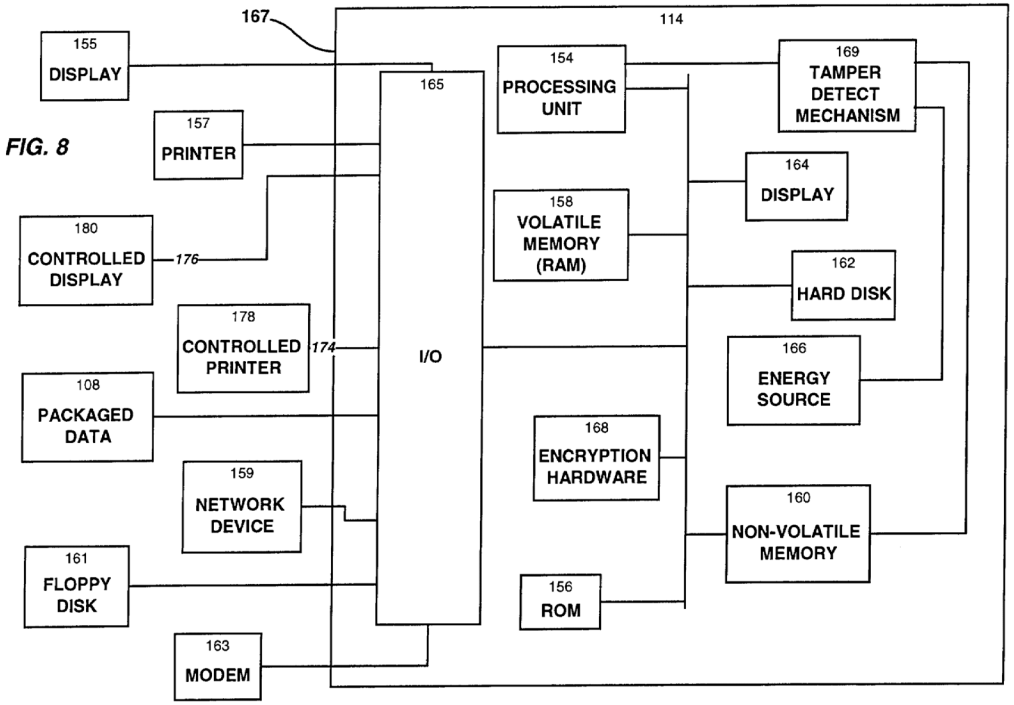

Ex. 1006 FIG. 8

Hellman

If Hellman's software player 42 was a processor, the combined system would be inoperative because it could not run before the software player 42 is "activated."

Response 60; Ex. 1004 10:44–54

If M indicates available uses the update unit 36 "sends a control ***signal*** to switch 41 which ***activates*** software player 42, allowing it to use software package 17."

Response 42; Ex. 1004 10:44–46

"[I]f the software is a computer program, then software player 42 would be a microprocessor or central processing unit (CPU)."

Response 42; Ex. 1004 10:66–11:3

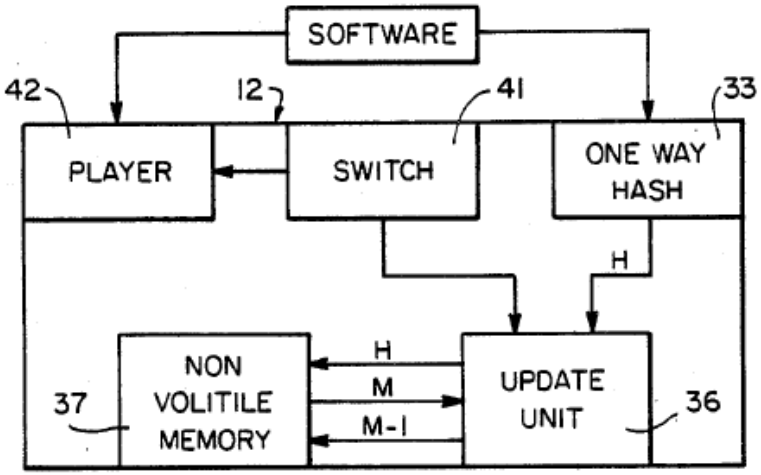

FIG_8

Response 41; Ex. 1004 FIG. 8

Petitioners' and Dr. Wolfe's Assumptions

Hellman's EEPROM 37 is replaced with or modified to include Chou's BIOS, with a verification structure ***in the memory of the BIOS***, and data including a license record

Petition 40–41; Reply 19–23; *but see* Response 52–55; Sur-Reply 18–19; Ex. 2018 ¶¶191–92

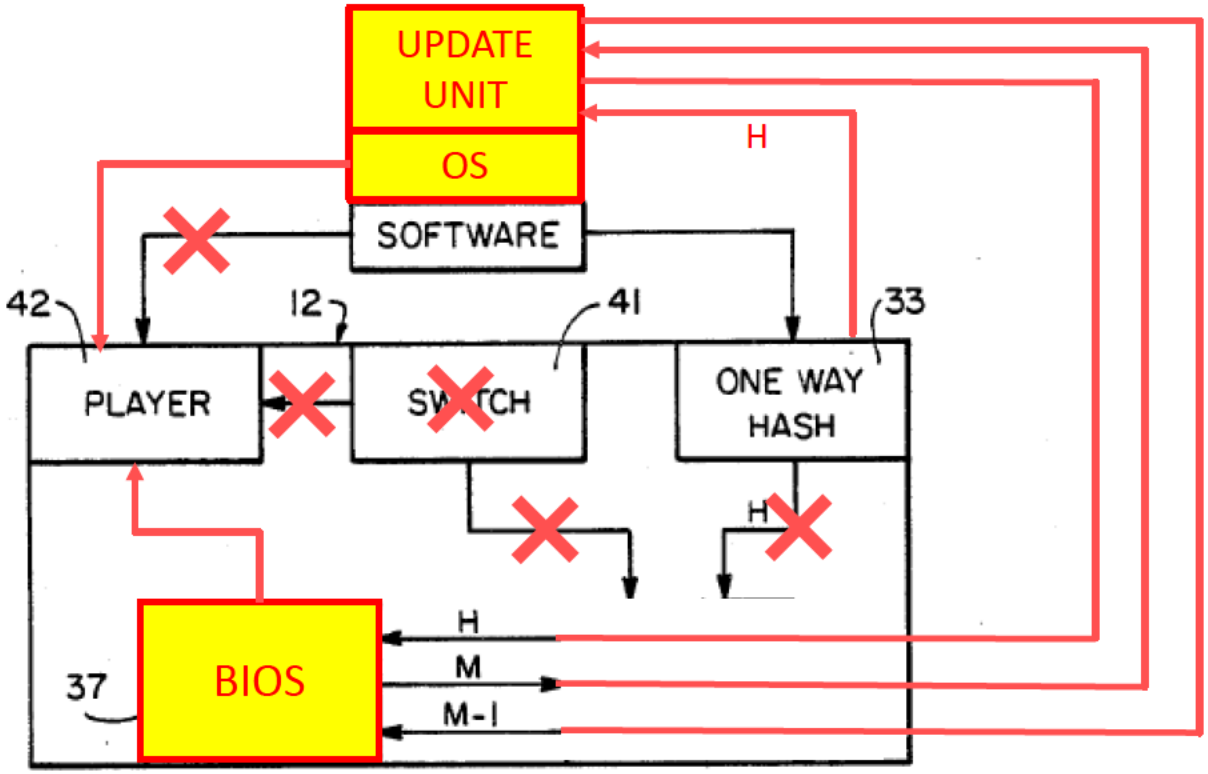

FIG_8

Ex. 1004 FIG. 8 (demonstrative annotations added)

Chou

Chou does not disclose any means of preventing software piracy or tampering.

Response 43, 52; Ex. 2018 ¶144

Chou discloses a system that "makes use of these new BIOS memory devices for effecting security measures which discourage theft."

Ex. 1005 2:6–2:7; Response 43

"Unless the ***BIOS routine*** has completely executed, the computer operating system can never be accessed rendering the computer inoperative."

Ex. 1005 3:60–62, *see also* 4:1–5; Response 43–44

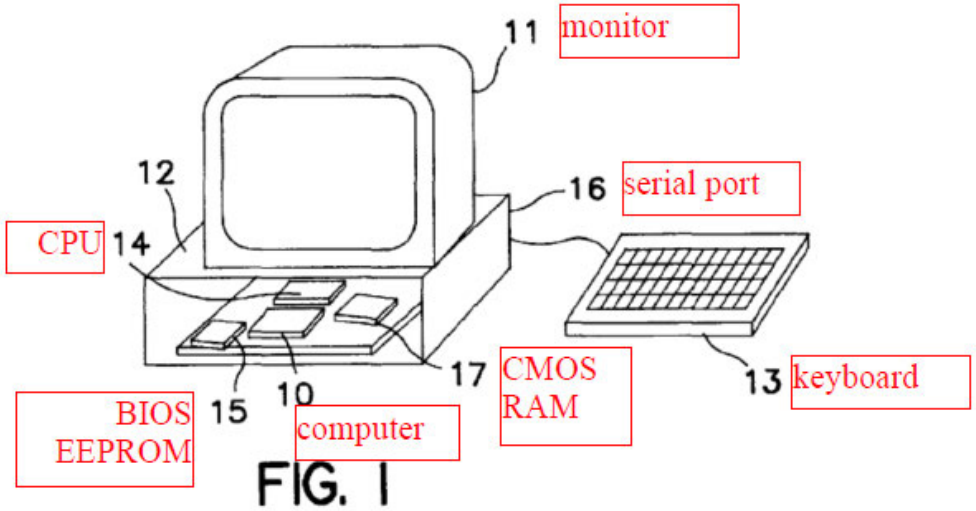

Response 43; Ex. 1005 FIG. 1, 3:30–36

Chou

Chou does not disclose tamper-prevention.

Response 52; Ex. 2018 ¶191; Ex. 1005 1:54–2:7

Chou teaches, at most, a means for password protection that cannot be defeated by removing CMOS RAM power.

Sur-Reply 11–12; Response 52–53; Ex. 2018 ¶¶191–92

"[I]f the power is removed from the CMOS RAM, the password is cleared and the system will boot up without requiring the user to enter the required password."

Ex. 1005 1:54–62

Chou does not disclose any attack that would ***modify*** password information.

Sur-Reply 12

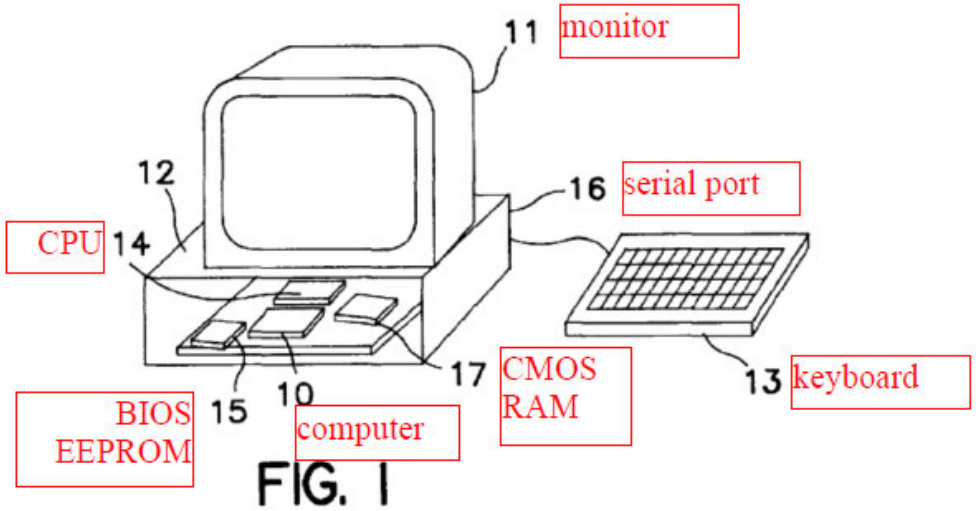

Response 43; Ex. 1005 FIG. 1, 3:30–36

Chou

Chou does not disclose storing information in the BIOS during "normal" operation of the computer.

Response 59; Ex. 1005 FIG. 10, 8:42–43; Ex. 2018 ¶¶146, 179

Chou discloses BIOS routines including a "security function."

Response 44–45; Ex. 1005 FIG. 10, 9:13–17, 9:26–36; Ex. 2018 ¶146

Chou's administrative functions are also part of the BIOS routines.

Response 45–46; Ex. 1005 FIG. 10, 8:49–61, 9:1–7; Ex. 2018 ¶146

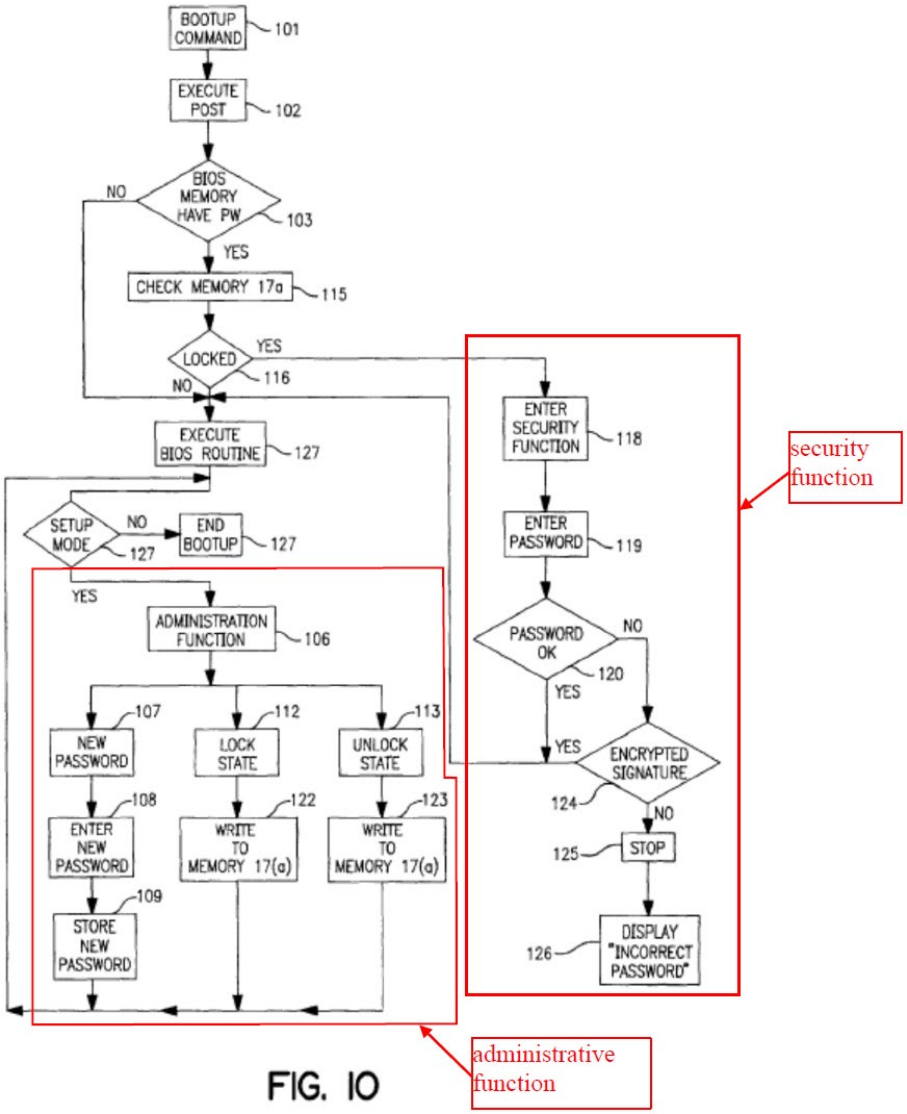

FIG. 10

Relevant Law: Objective Indicia

Objective indicia "can be the most probative evidence of non-obviousness in the record, and enables the . . . court to avert the trap of hindsight."

Custom Accessories, Inc. v. Jeffrey-Allan Indus., Inc., 807 F.2d 955, 960 (Fed. Cir. 1986)

Professional approval and praise by others can indicate non-obviousness of an invention.

Power Integrations, Inc. v. Fairchild Semiconductor Int'l, Inc., 711 F.3d 1348, 1368 (Fed. Cir. 2013);
Apple Inc. v. Samsung Elec. Co., Ltd., 839 F.3d 1034, 1053 (Fed. Cir. 2016)

Licensing activity evidences non-obviousness of a patent where the licensing holds a nexus to the patent at issue and was entered into based on the strength of the patent.

Impax Laboratories Inc. v. Lannett Holdings Inc., 893 F.3d 1372, 1381–82 (Fed. Cir. 2018);
Transocean Offshore Deepwater Drilling, Inc. v. Maersk Drilling USA, Inc., 699 F.3d 1340, 1353 (Fed. Cir. 2012)

Where licensee paid more than costs of litigation, litigation-based licenses demonstrate a nexus between the license and patent's strength.

Transocean Offshore Deepwater Drilling, Inc. v. Maersk Drilling USA, Inc., 699 F.3d 1340, 1353 (Fed. Cir. 2012)

American Megatrends Praised the Invention

Joint News Release
Ancora Online™

American Megatrends Inc. (AMI) and Ancora Technologies Announce Strategic Alliance to Offer BIOS Based Security Products

ATLANTA, GA and IRVINE, CA, February 14, 2005 - BIOS pioneer American Megatrends Inc. (AMI) and Ancora Technologies Inc. announce strategic alliance to offer BIOS based security products utilizing Ancora's Platform Security Anchor ™ (PSA) technology (as described in US Patent 6,411,941). The first offering, Ancora Online™, scheduled to be released in Q2 2005, provides "consumer strong authentication" for online service providers such as online banks, online retailers and ISPs.

The recent "phishing attacks" on online banking accounts highlight the need for an effective yet convenient 2nd factor authentication in addition to a password. Ancora Online™ provides "consumer strong authentication" that balances consumer convenience with effectiveness and cost. Ancora Online™ enables consumers to designate which computer or computers may access their online account. Stealing passwords becomes useless as the hacker will not be able to use a stolen password to access the consumer's account without physical possession of the consumer's computer.

PSA™ is a security technology that embeds encryption keys in the core of the PC, its motherboard. This approach achieves a higher level of reliability and security than software-based technologies and a higher level of convenience than hardware-based ones (i.e. tokens and smart cards).

"The strategic alliance with Ancora allows us to enter the security field and leverage our BIOS expertise and knowledge", said S. Shankar, AMI president. "We see great value for consumers in BIOS based security products."

"The BIOS is the core of the computer and is the only component that enables the highest level of reliability and convenience. These attributes are critical for widespread consumer acceptance of security technologies", said Miki Hufior, CEO of Ancora. "We are very pleased to have AMI as a strategic ally. AMI's knowledge and credibility accelerated our product development efforts and ensures that Ancora products will always be compatible with the latest PC platform technologies"

"Our first product, Ancora Online, offers a solution to the online ID theft problem caused by "phishing attacks", stated Ancora President Al Saavedra. "When we designed the product, it was important for us to build a product that consumers want, making usability, convenience and cost high priority design goals"

ANC031827

Page 1

ANCORA_0001968
IPR2021-01338
ANCORA EX2027

ATLANTA, GA and IRVINE, CA, February 14, 2005 - BIOS pioneer American Megatrends Inc. (AMI) and Ancora Technologies Inc. announce strategic alliance to offer BIOS based security products utilizing Ancora's Platform Security Anchor ™ (PSA) technology (as described in US Patent 6,411,941). The first

Ex. 2027 at 1; Response 67; *see also* Ex. 2029

PSA™ is a security technology that embeds encryption keys in the core of the PC, its motherboard. This approach achieves a higher level of reliability and security than software-based technologies and a higher level of convenience than hardware-based ones (i.e. tokens and smart cards).

"The strategic alliance with Ancora allows us to enter the security field and leverage our BIOS expertise and knowledge", said S. Shankar, AMI president. "We see great value for consumers in BIOS based security products."

Ex. 2027 at 1; Response 67

About American Megatrends Inc.

Founded in 1985, American Megatrends Inc. (AMI) has dedicated its resources to providing OEMs, resellers and systems integrators with leading edge computer technologies. Privately held, AMI is best known for its BIOS, but it also supplies state-of-the-art hardware, software and utilities to over 55 percent of today's high-tech manufacturers. AMI offers high-density motherboards, disk subsystems and innovative storage solutions and is a voting member of the Storage Networking Industry Association (SNIA). Headquartered in Atlanta, AMI has locations in the U.S. and throughout the world including Chennai, Munich, Seoul, Taipei and Tokyo to better serve its customers.

Ex. 2027 at 2; Response 66–67

Reported Litigation Costs

Patent Infringement, Defending Claims of Patent Infringement by Non-Practicing Entity					
Less than $1 Million at Risk					
Initial case management	N/A	N/A	$25	$40	$50
Inclusive of discovery, motions, and claim construction	$300	$300	$200	$250	$350
Inclusive of pre and post-trial, and appeal when applicable	$600	$500	$500	$750	$725
Cost of mediation	N/A	$100	$25	$45	$50
$1-$10 Million at Risk					
Initial case management	N/A	N/A	$50	$75	$75
Inclusive of discovery, motions, and claim construction	$750	$570	$500	$750	$500
Inclusive of pre and post-trial, and appeal when applicable	$1,250	$1,000	$850	$1,875	$1,750
Cost of mediation	N/A	$113	$35	$50	$63
$10-$25 Million at Risk					
Initial case management	N/A	N/A	$55	$125	$100
Inclusive of discovery, motions, and claim construction	$1,500	$1,200	$713	$1,500	$1,500
Inclusive of pre and post-trial, and appeal when applicable	$2,400	$2,000	$1,250	$3,000	$3,000
Cost of mediation	N/A	$200	$50	$90	$75
More than $25 Million at Risk					
Initial case management	N/A	N/A	$100	$200	$400
Inclusive of discovery, motions, and claim construction	$2,500	$2,000	$1,100	$2,500	$2,500
Inclusive of pre and post-trial, and appeal when applicable	$4,000	$3,750	$2,000	$4,500	$4,000
Cost of mediation	N/A	$213	$63	$100	$120

Ex. 2035; Response 69

’941 Patent Licenses

[redacted]

Response 69; Ex. 2032 Section 1.2

[redacted]

Response 70; Ex. 2032; Ex. 2002

[redacted]

Ex. 2032 Section 3.1; Response 69

[redacted]

Response 69; Ex. 2031 at 2

[redacted]

Response 70; Ex. 2031; Ex. 2037

[redacted]

Ex. 2031 Section 3.1; Response 69

[redacted]

Sur-Reply 22; Ex. 1050

[redacted]

Sur-Reply 22; Ex. 1050 at 13–14;
Ex. 2048; Ex. 2049

[redacted]

Ex. 1050 at 4; Sur-Reply 21