Trials@uspto.gov
571-272-7822

Paper 8
Date: March 16, 2022

UNITED STATES PATENT AND TRADEMARK OFFICE

BEFORE THE PATENT TRIAL AND APPEAL BOARD

ARNOLD & RICHTER CINE TECHNIK GMBH & CO. BETRIEBS KG,
Petitioner,

v.

ROTOLIGHT LIMITED,
Patent Owner.

IPR2021-01496
Patent 10,197,257 B2

Before GRACE KARAFFA OBERMANN, MICHELLE N. ANKENBRAND, and AVELYN M. ROSS, *Administrative Patent Judges.*

ROSS, *Administrative Patent Judge*.

DECISION
Granting Institution of *Inter Partes* Review
35 U.S.C. § 314, *37 C.F.R. § 42.4*

I. INTRODUCTION

Arnold & Richter Cine Technik GmbH & Co. Betriebs KG ("Petitioner") filed a Petition (Paper 1, "Pet.") requesting an *inter partes* review of claims 1–21 of U.S. Patent No. 10,197,257 B2 (Ex. 1001, "the '257 patent"). Rotolight Limited ("Patent Owner") waived the preliminary response to the Petition. Paper 6.

We have authority to determine whether to institute an *inter partes* review. 35 U.S.C. § 314 (2020); 37 C.F.R. § 42.4(a). The standard for instituting an *inter partes* review is set forth in 35 U.S.C. § 314(a), which provides that an *inter partes* review may not be instituted "unless the Director determines . . . there is a reasonable likelihood that the petitioner would prevail with respect to at least [one] of the claims challenged in the petition."

For the reasons set forth below, and upon considering the Petition and evidence presented in the Petition, we determine that Petitioner has established a reasonable likelihood of prevailing with respect to at least one challenged claim. Accordingly, we grant the Petition, and institute an *inter partes* review.

A. Real Parties-in-Interest

Petitioner states that "[t]he real party-in-interest in this proceeding is Arnold & Richter Cine Technik GmbH & Co. Betriebs KG." Pet. 2. Patent Owner identifies Rotolight Limited and Rotolight Group Ltd. as a real parties-in-interest. Paper 4, 1 (Patent Owner's Mandatory Notices).

B. Related Proceedings

The Parties identify the petitions for *inter partes* review challenging U.S. Patent Nos. 10,197,258 (IPR2021-01497) and 10,203,101 (IPR2021-01498) as related matters. Pet. 2; Paper 4, 1–2.

C. The '257 Patent

The '257 patent, titled "Lighting System and Control Thereof," issued on February 5, 2019. Ex. 1001, codes (45), (54). The '257 patent "relates to a lighting system, and the control of a lighting system, and the simulation of lighting special effects, and in particular to a lighting system for videography, broadcasting and cinematography." Ex. 1001, 1:16–20.

According to the '257 patent, a typical "lighting controller called a 'flicker box' . . . is used to produce flickering lighting effects to mimic flickering light for example from a fire place, candle, electrical spark or lightening." *Id.* at 1:21–25. But flicker boxes are "complex, costly and time consuming" to set up, and the "connection and control of multiple pieces of hardware . . . requir[e] a physical wired connection to the 'hot' light source desired to be controlled." *Id.* at 1:30–35. Flicker boxes are also "incompatible with LED light sources" and "require the use of 'hot' incandescent light sources which are energy inefficient and also pose health and safety risks to those working on set." *Id.* at 1:39–44.

The "improved solution" the '257 patent offers includes methods, controllers, and computer programs "for controlling a lighting device to produce user customizable lighting effect" by, among other things, "calculating a time varying lighting value based on at least one simulation parameter" and "outputting said time varying lighting value thereby to

simulate a lighting effect." *Id.* at 1:45–51, 2:61–67; 3:37–43. Figure 2 is illustrative and reproduced below.

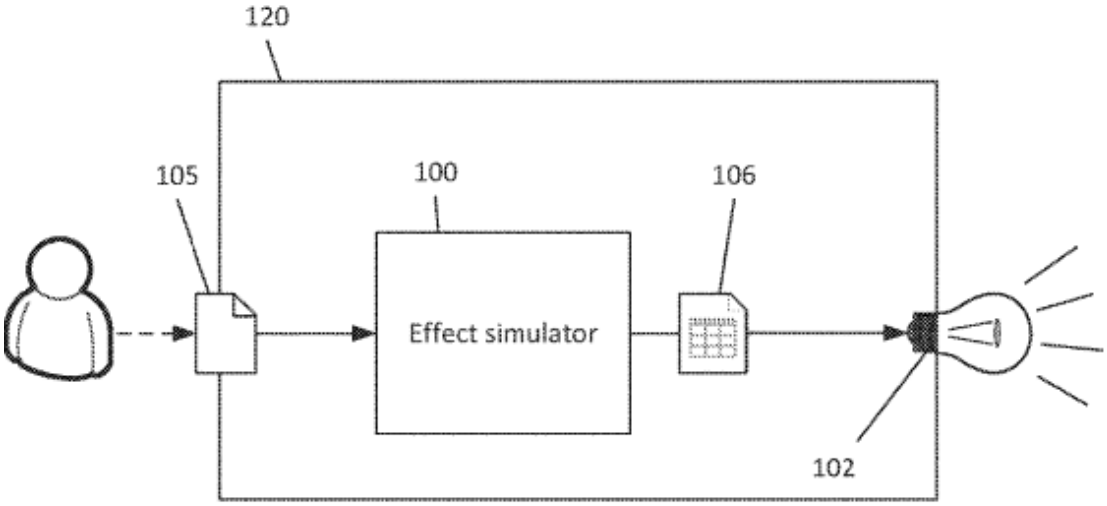

Figure 2

Figure 2 "is a schematic diagram of a further lighting system." *Id.* at 5:25. Figure 2 shows studio lamp device 120 that includes input interface 105 and lighting effect simulator 100 which produces data 106 used to modulate light 102. *Id.* at 5:58–6:14. "In one example, the light 102 is an array of LEDs, preferably of differing colours" and a "microcontroller or other computing unit is integrated in the lamp device 120 for performing calculations." *Id.* at 5:60–61, 5:65–67. The '257 patent explains that "[t]his arrangement does not require the DMX distribution hub 302, power elements 304, 306" required in a flicker box lighting system. *Id.* at 5:61–63.

Figure 6, reproduced below, illustrates a simulated lighting effect that employs an exemplary graphic user interface.

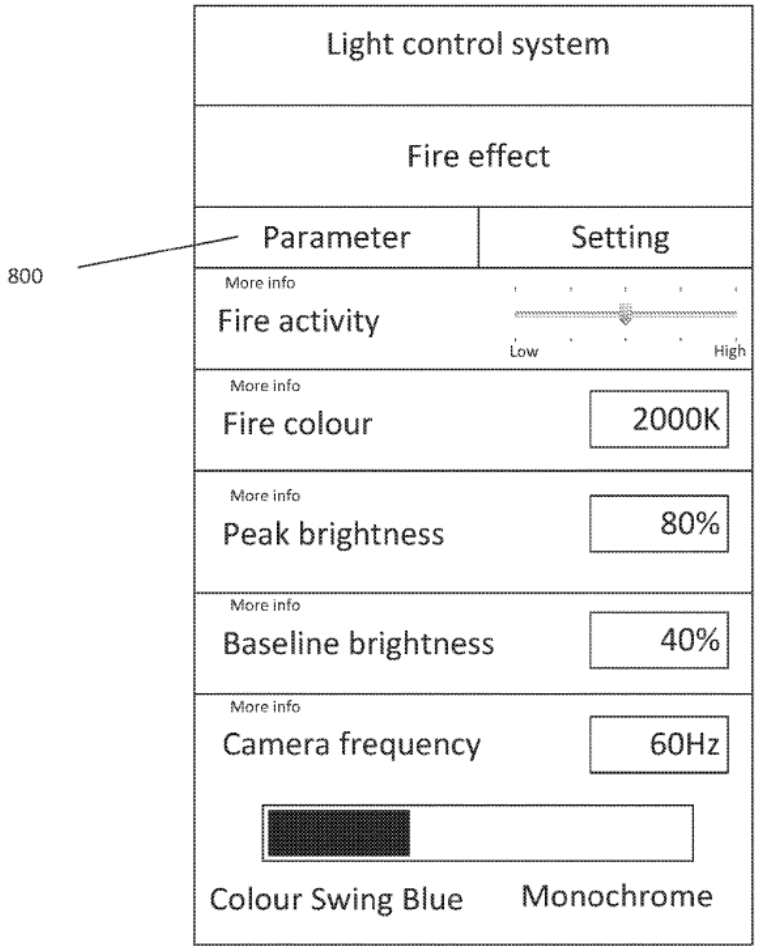

Figure 6

Figure 6 "is a graphic user interface [800] for user input of simulation parameters." *Id.* at 5:32–33. According to Figure 6, the simulated effect is a fire effect. *Id.* at 8:14–16. Interface 800 allows the user to select a "fire activity" by sliding the slider between low to high and set values for "fire colour," "peak brightness," "baseline brightness," and "camera frequency." *Id.* at 8:17–21.

D. Illustrative Claim

Petitioner challenges claims 1–21 of the ’257 patent, with claims 1, 15 and 20 being the independent claims. Claim 1, reproduced below, is representative of the challenged claims.

> 1. A method for controlling a lighting device to produce a user customisable lighting effect, the method comprising:
>
> calculating, using an effect simulator, a time varying lighting value based on at least one simulation parameter; wherein said at least one simulation parameter characterises a user customisable lighting effect selected from a range of different user customisable lighting effects for at least one of: videography, broadcasting, cinematography, studio filming, and location filming; wherein said at least one simulation parameter is at least one of: a random brightness; a random duration; and a random interval; said simulation parameter depending on the user customisable lighting effect being simulated; and
>
> outputting, from said effect simulator, said time varying lighting value thereby to simulate the user customizable lighting effect.

Ex. 1001, 11:54–12:3.

E. The Asserted Unpatentability Challenges

Petitioner asserts that claims 1–21 would have been unpatentable on the following grounds:

Claim(s) Challenged	35 U.S.C. §	Reference(s)/Basis
1–21	102[1]/103	Astera[2]

[1] The Leahy-Smith America Invents Act (“AIA”), Pub. L. No. 112-29, 125 Stat. 284 (2011), amended 35 U.S.C. § 102, effective March 16, 2013. Given that the application from which the ’257 patent issued was filed after this date, the current versions of §§ 102 and 103 apply.

[2] Astera LED Technology GmbH, AX10 SPOTMAXTM User Manual, dated May 7, 2015 (Ex. 1004, “Astera”), but alleged by Petitioner to have a

Claim(s) Challenged	35 U.S.C. §	Reference(s)/Basis
1–21	102/103	Pohlert[3]

Pet. 2. Petitioner also relies on declaration testimony of Michael Wood (Ex. 1006, "the Wood Declaration") and Simon Canins (Ex. 1008) to support its allegations.

II. ANALYSIS

A. Principles of Law

"In an IPR [(*inter partes* review)], the petitioner has the burden from the onset to show with particularity why the patent it challenges is unpatentable." *Harmonic Inc. v. Avid Tech., Inc.*, 815 F.3d 1356, 1363 (Fed. Cir. 2016) (citing 35 U.S.C. § 312(a)(3) (2012) (requiring *inter partes* review petitions to identify "with particularity . . . the evidence that supports the grounds for the challenge to each claim")). This burden of persuasion never shifts to the patent owner. *See Dynamic Drinkware, LLC v. Nat'l Graphics, Inc.*, 800 F.3d 1375, 1378 (Fed. Cir. 2015) (discussing the burden of proof in *inter partes* review). Furthermore, a petitioner cannot satisfy its burden of proving obviousness by employing "mere conclusory statements." *In re Magnum Oil Tools Int'l, Ltd.*, 829 F.3d 1364, 1380 (Fed. Cir. 2016).

To anticipate, a reference must "show all of the limitations of the claims arranged or combined in the same way as recited in the claims." *Net MoneyIN, Inc. v. VeriSign, Inc.*, 545 F.3d 1359, 1370 (Fed. Cir. 2008); *accord In re Bond*, 910 F.2d 831, 832 (Fed. Cir. 1990).

---

publication date of June, 2015. *See* Pet. 36 (Petitioner's information pertaining to earliest publication date).

[3] Pohlert et al., US 2012/0044374 A1, published Feb. 23, 2012 (Ex. 1003, "Pohlert").

Obviousness is a question of law based on underlying determinations of fact. *Graham v. John Deere Co.*, 383 U.S. 1, 17 (1966); *Richardson-Vicks, Inc. v. Upjohn Co.*, 122 F.3d 1476, 1479 (Fed. Cir. 1997). A claim is unpatentable as obvious, under 35 U.S.C. § 103, if the differences between the claimed subject matter and the prior art are such that the subject matter, as a whole, would have been obvious at the time of the invention to a person having ordinary skill in the art. *KSR Int'l Co. v. Teleflex Inc.*, 550 U.S. 398, 406 (2007). The question of obviousness is resolved on the basis of underlying factual determinations including (1) the scope and content of the prior art; (2) any differences between the claimed subject matter and the prior art; (3) the level of ordinary skill in the art; and (4) objective evidence of nonobviousness.[4] *Graham*, 383 U.S. at 17–18.

At this preliminary stage, we determine whether the information presented shows a reasonable likelihood that Petitioner would prevail in establishing that at least one of the challenged claims would have been anticipated by or obvious over the proposed prior art.

We analyze the challenges presented in the Petition in accordance with the above-stated principles.

B. Level of Ordinary Skill in the Art

We review the grounds of unpatentability in view of the understanding of a person of ordinary skill in the art at the time of the invention. *Graham*, 383 U.S. at 17.

Petitioner contends that a person of ordinary skill in the art "would have had a good working knowledge of electrical engineering and

[4] At this stage of the proceeding, the parties have not asserted or otherwise directed our attention to any objective evidence of nonobviousness.

entertainment lighting systems, controls, and effects." Pet. 8 (citing Ex. 1006 ¶ 39). Accordingly, Petitioner states that such a person would have had "an undergraduate Bachelor's degree in electrical engineering, or a comparable field, as well as some experience in the field" and that "the more education one has, the less experience needed to attain an ordinary level of skill. . . . [and] [s]imilarly, more experience in the field may serve as a substitute for formal education." *Id.* Patent Owner does not, at this time, dispute Petitioner's proposed definition. *See* Patent Owner's Preliminary Response Waiver, *passim*.

On this record, we determine that Petitioner's proposed definition is consistent with the prior art of record, and apply it for this Decision. *See Okajima v. Bourdeau*, 261 F.3d 1350, 1355 (Fed. Cir. 2001) (explaining that specific findings on ordinary skill level are not required "where the prior art itself reflects an appropriate level and a need for testimony is not shown" (quoting *Litton Indus. Prods., Inc. v. Solid State Sys. Corp.*, 755 F.2d 158, 163 (Fed. Cir. 1985))). We will make any final determination pertaining to the level of ordinary skill in the art, however, on the full trial record.

C. Claim Construction

Petitioner does not propose any claim terms for construction. *See* Pet. 7. For purposes of this Decision, we need not expressly construe any claim terms at this time. *See Vivid Techs., Inc. v. Am. Sci. & Eng'g, Inc.*, 200 F.3d 795, 803 (Fed. Cir. 1999) (holding that "only those terms need to be construed that are in controversy, and only to the extent necessary to resolve the controversy"); *see also Nidec Motor Corp. v. Zhongshan Broad Ocean Motor*, 868 F.3d 1013, 1017 (Fed. Cir. 2017) (citing *Vivid Techs.* in the context of an *inter partes* review).

D. Alleged Invalidity Based on Pohlert

Petitioner alleges that Pohlert anticipates or renders obvious claims 1–21. Pet. 56–99. Petitioner also relies on the testimony of Mr. Wood to support its arguments. *See id.*

1. Overview of Pohlert (Ex. 1003)

Pohlert is directed to "lighting apparatus and systems as may be used in photography, film, television, and other applications." Ex. 1003 ¶ 3. Pohlert explains that its lighting apparatus included an effects generator. *Id.* ¶ 18. One embodiment of Pohlert's lighting apparatus is reproduced below.

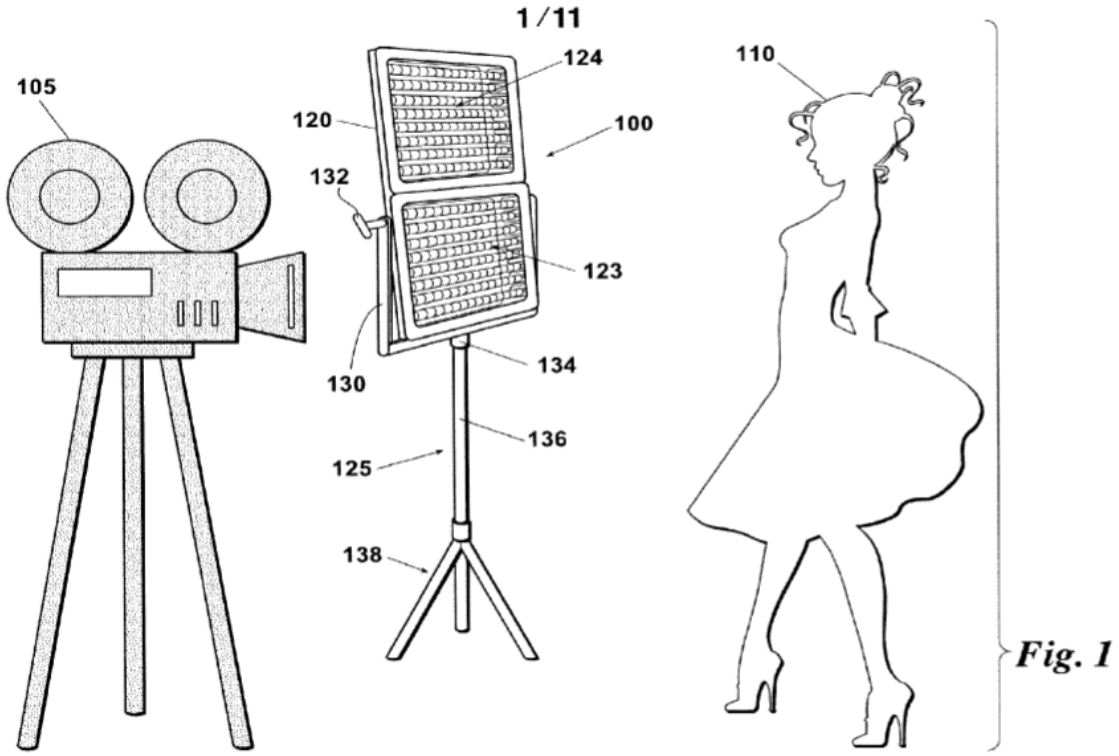

Ex. 1003, Figure 1. Figure 1 "illustrates one environment in which the instant invention might be utilized." *Id.* ¶ 26. Figure 1 depicts video camera 105, e.g., a motion picture camera, and light panel assembly 100 on stand 125 facing toward subject 110. *Id.* ¶¶ 52–53. Light panel assembly 100 may include multiple light panel sections 123 and 124. *Id.* ¶ 53. The

light panels include an arrangement of lamp elements which may be light emitting diodes ("LEDs"), light emitting electrochemical cells ("LECs"), or any other artificial light source. *Id.* ¶¶ 46, 55, 51. Light frame 120 and twisting handle 132 allow light panel assembly to rotate and tilt to provide directional lighting. *Id.* ¶ 53.

Another embodiment is illustrated in Figures 3A and 3B, shown below.

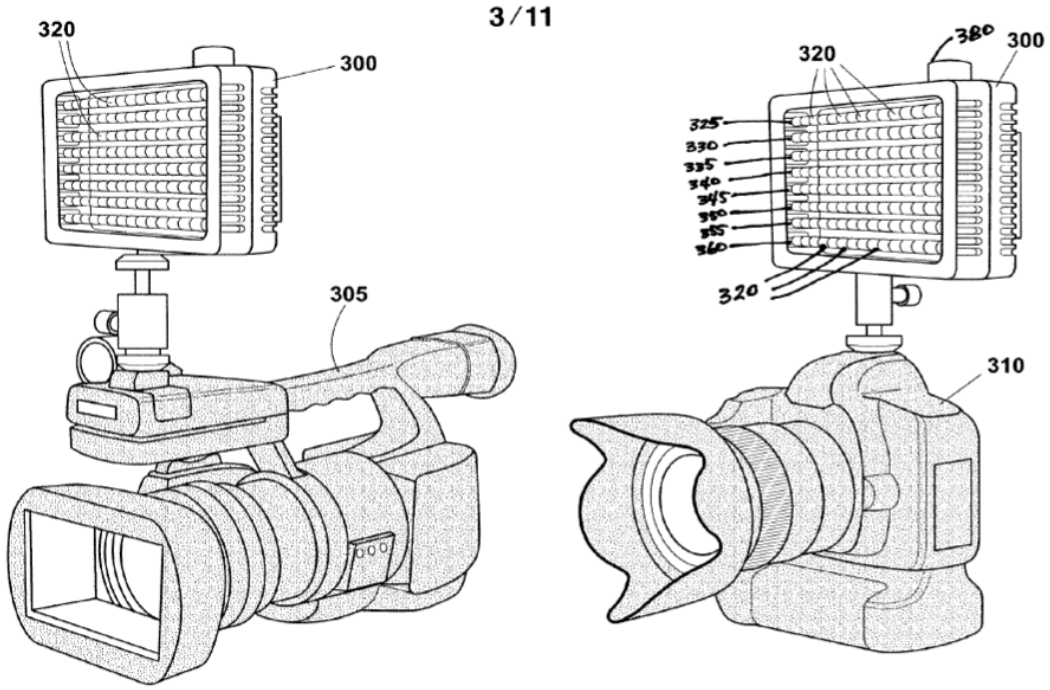

Fig. 3A *Fig. 3B*

Ex. 1003, Figs. 3A, 3B. Figures 3A and 3B "contain illustrations of different approaches to mounting a preferred embodiment of the instant invention on video and still cameras, respectively. *Id.* ¶ 28. Figures 3A and 3B show that "lighting device [300] might be directly mounted on a camera as opposed to being stand-mounted" as in Figure 1. *Id.* ¶ 55. Figure 3A (left) shows an example of light elements or lamps, collectively 320, mounted on video camera 305 and Figure 3B (right) shows lighting device 320 mounted on still camera 310. *Id.* Light segments 325, 330, 335, 340,

350, 355, 360 and additional unnumbered light segments combine to make a panel array of light elements or lamps 320. *Id.* ¶¶ 55–57, 59. Each individual light segment or groups of segments can be controlled to generate lighting effects. *Id.* ¶¶ 60–64.

Pohlert further describes a user interface to allow for operation of switches and adjustment of controls. For example, Pohlert describes "[a] manual interface 530 is provided to allow operation of the switches 522 according to manual selection. The manual interface 530 may include a master power switch 531, switch controls 532, and, optionally, an effects selector 533." *Id.* ¶ 59; *see also id.* Figs. 5A, 5B (illustrating switch controls and effects selector).

2. Analysis of Claim 1

Petitioner alleges that Pohlert anticipates claim 1. Pet. 58. Petitioner asserts that "Pohlert discloses a method for controlling a lighting system having LED 'light panels' controlled by a 'power controller,' enabling users to select and modify lighting special effects such as patterns of strobing, flashing, and dimming and brightening the lights" as claimed in claim 1. *Id.* (citing Ex. 1003, Abstract, ¶¶ 20, 50, 63, 67, 103). According to Petitioner, Pohlert's method "can be used for 'photography, film, television, and other applications.'" *Id.* (quoting Ex. 1003 ¶ 3); *see also* Ex. 1003, Figs. 1, 3 (illustrating both video cameras and still cameras).

Petitioner alleges that Pohlert describes "an 'effects selector' and 'effects generator' (Figure 5A) or 'processor' (Figure 5B) in the 'power controller' [that] calculates time varying lighting values, in the form of data signals characterizing the desired lighting effect, which are converted to power control signals supplied to the LED's to generate desired light

output." Pet. 60 (citing Ex. 1003 ¶¶ 59, 61–62, 65–67, Figs. 5A, 5B; Ex. 1006 ¶¶ 137–145). Petitioner states that "[t]hese power control signals provide time-varying signals for 'controlling the intensities' of the LEDs to generate the desired light output patterns and effects," which "are based on user-selected parameters for desired lighting effects, including brightness (or dimming), duration, frequency, whether the sequence will be pseudo-random, and color." *Id.* (citing Ex. 1003 ¶¶ 51, 59, 61–67, 89–91, Figs. 5A, 5B; Ex. 1006 ¶¶ 137–145); *see also id.* at 61 (describing generating light effect patterns that are user-selected parameters). Thus, Petitioner explains that Pohlert "calculates . . . a time varying lighting value" as claimed. *Id.* at 59–62.

Petitioner also contends that users can customize a range of effects through the interface on the controller by selecting and adjusting simulating parameters. Pet. 62–63 (citing Ex. 1003 ¶¶ 57–59, 61, 63, 67, Figs. 2, 5A, 5B; Ex. 1006 ¶¶ 146–149). Petitioner states that "[t]he lighting effects, created based on these parameters, are used to provide lighting for 'photography, film, television, and other applications,'" and therefore, Pohlert describes "user customizable lighting effects for . . . videography, broadcasting, cinematography, studio filming, and location filming," as claimed. *Id.* at 63 (citing Ex. 1003 ¶¶ 3, 5, Fig. 1; Ex. 1006 ¶ 147).

Petitioner alleges Pohlert also teaches that the simulation parameter is one of "a random brightness; a random duration; and a random interval." *Id.* at 64 (citing Ex. 1006 ¶¶ 150–153). Specifically, Petitioner states that Pohlert describes

> **[1] strobing or flashing** different groups of light segments 325, 330, 335, 340, 345, 350, 355, and 360 (given the example of FIG. 3B) in a predefined sequence (which may be a **pseudo-random**

> **sequence**, if desired), **[2] strobing or flashing** different light elements 320 of the light segments 325-360 in a predefined (or **pseudo-random**) sequence, [3] gradually dimming or brightening light segments 325-360 (individually, in groups, or collectively), **or [4] various combinations of these effects**.

Id. (quoting Ex. 1003 ¶ 63). Petitioner explains that the '257 patent describes a "pseudo-random parameter" as equivalent to a random parameter. *Id.* at 65 (quoting Ex. 1001, 7:30–34 and citing Ex. 1006 ¶ 150).

Petitioner further alleges that the simulation parameters depend on effects selected by the user. *Id.* at 66. By way of example, Petitioner explains that "the simulation parameter related to 'frequency' of an oscillation signal depends on the user selecting to simulate a 'strobing' effect." *Id.* (citing Ex. 1003 ¶¶ 61–63, 66–67; Ex. 1006 ¶¶ 154–156).

Lastly, Petitioner argues that "[t]he 'power controller' sends control signals through wires supplying power to light elements, causing the light elements to simulate the selected effect," which is "provided to the LED lamps through cables or wires." *Id.* at 66–67.

We have reviewed the evidence and argument presented in the Petition and determine, for purposes of this Decision, that Petitioner has shown a reasonable likelihood of prevailing with respect to its contention that the subject matter of claim 1 of the '257 patent is anticipated by Pohlert. Therefore, Petitioner establishes a reasonable likelihood of prevailing with respect to at least one of the challenged claims.

3. Remaining Claims

Petitioner also asserts Pohlert anticipates claims 2–21 (Pet. 68–82, 84–89, 94–99) and that Pohlert would have rendered claims 11 and 16 of the '257 patent obvious (*id.* at 83–84, 90–94). We have reviewed the evidence and arguments Petitioner provides, including the relevant portions of the

Wood Declaration, and determine, on this record, that Petitioner's challenges to claims 2–21 based on anticipation or, alternatively, obviousness (claims 11 and 16), in view of Pohlert, are adequately supported for institution purposes.

E. Remaining Challenges

Petitioner additionally alleges that Astera anticipates claims 1–21.[5] Pet. 11–56. Petitioner relies on the testimony of Mr. Wood and Mr. Canins to support its arguments. *See* Pet. 11–56.

Because we conclude above that the information presented in the Petition establishes a reasonable likelihood that Petitioner would prevail on its assertion that at least one claim of the '257 patent is unpatentable as anticipated by Pohlert, we institute an *inter partes* review of all challenged claims and all grounds presented in the Petition. *See PGS Geophysical AS v. Iancu*, 891 F.3d 1354, 1360 (Fed. Cir. 2018) (indicating that a decision whether to institute an *inter partes review* "require[s] a simple yes-or-no institution choice respecting a petition, embracing all challenges included in the petition").

III. CONCLUSION

For the foregoing reasons, we determine that Petitioner has demonstrated a reasonable likelihood that it would prevail with respect to at least one of the claims challenged in the Petition. Accordingly, we institute an *inter partes* review of the '257 patent.

---

[5] Petitioner alleges that its challenge grounded on Astera is based on "102/103" (Pet. 3); however, Petitioner's detailed allegations only identify anticipation as the alleged basis for invalidity. *Id.* at 11, 68–56.

The factual findings set forth in this Decision are preliminary and provided for the sole purpose of deciding whether to institute a review. Any final findings will be based on the full trial record, including any information presented in a timely filed response to the Petition. *See Trivascular, Inc. v. Samuels*, 812 F.3d 1056, 1068 (Fed. Cir. 2016) (noting that "there is a significant difference between a petitioner's burden to establish a 'reasonable likelihood of success' at institution, and actually proving invalidity by a preponderance of the evidence at trial") (quoting 35 U.S.C. § 314(a) and comparing *id.* with § 316(e)).

IV. ORDER

In consideration of the foregoing, it is hereby:

ORDERED that, pursuant to 35 U.S.C. § 314(a), an *inter partes* review of claims 1–21 of U.S. Patent No. 10,197,257 B2 is instituted with respect to all grounds set forth in the Petition; and

FURTHER ORDERED that, pursuant to 35 U.S.C. § 314(c) and 37 C.F.R. § 42.4, notice is hereby given of the institution of a trial, which will commence on the entry date of this Decision.

FOR PETITIONER:

Joseph Raffetto
Celine Jimenez Crowson
Scott Hughes
HOGAN LOVELLS US LLP
joseph.raffetto@hoganlovells.com
celine.crowson@hoganlovells.com
scott.hughes@hoganlovells.com

FOR PATENT OWNER:

Alison L. McCarthy
Bryan J. Cannon
TROUTMAN PEPPER HAMILTON SANDERS LLP
alison.mccarthy@troutman.com
bryan.cannon@troutman.com