Trials@uspto.gov
571-272-7822

Paper 14
Date: April 1, 2022

UNITED STATES PATENT AND TRADEMARK OFFICE

BEFORE THE PATENT TRIAL AND APPEAL BOARD

EDWARDS LIFESCIENCES CORPORATION, and
EDWARDS LIFESCIENCES LLC,
Petitioner,

v.

AORTIC INNOVATIONS, LLC,
Patent Owner.

IPR2022-00034
Patent 10,966,846 B2

Before JOHN G. NEW, CHRISTOPHER G. PAULRAJ, and
JASON W. MELVIN, *Administrative Patent Judges.*

NEW, *Administrative Patent Judge*.

DECISION
Granting Institution of *Inter Partes* Review
35 U.S.C. § 314, 37 C.F.R. § 42.4

I. INTRODUCTION

Petitioner Edwards Lifesciences Corporation, And Edwards Lifesciences LLC ("Petitioner") has filed a Petition (Paper 2, "Pet.") seeking inter partes review of claims 1–12 of US Patent 10,966,846 B2 (Ex. 1001, the "'846 patent"). Patent Owner Aortic Innovations, LLC ("Patent Owner") timely filed a Preliminary Response. Paper 6 ("Prelim. Resp."). With our authorization, Petitioner filed a Reply to the Preliminary Response (Paper 9 ("Reply")), and Patent Owner filed a Sur-Reply. Paper 11 ("Sur-Reply").

Under 35 U.S.C. § 314, the Board "may not authorize an inter partes review to be instituted unless … the information presented in the petition *… and any response … shows that there is a reasonable likelihood that the petitioner would prevail with respect to at least 1 of the claims challenged in the petition." Upon consideration of the Petition, Preliminary Response, Reply, Sur-Reply, and the evidence of record, we determine that the evidence presented demonstrates a reasonable likelihood that Petitioner would prevail in establishing the unpatentability of at least one challenged claim of the '846 patent.*

II. BACKGROUND

A. Patent Owner's Statutory Disclaimer

On January 26, 2022, Patent Owner filed a statutory disclaimer of claims 1–5 and 7–12 of the '846 patent with the U.S. Patent and Trademark Office. *See* Ex. 2011. In view of Patent Owner's statutory disclaimer, we treat claims 1–5 and 7–12 as having never been part of the '846 patent, such that Petitioner cannot seek *inter partes* review of those claims. *See Vectra Fitness, Inc. v. TNWK Corp.*, 162 F.3d 1379, 1383 (Fed. Cir. 1998) (holding

that "[t]his court has interpreted the term 'considered as part of the original patent' in section 253 to mean that the patent is treated as though the disclaimed claims never existed") (citing *Guinn v. Kopf*, 96 F.3d 1419, 1422 (Fed. Cir. 1996)); 37 C.F.R. § 42.107(e) ("No *inter partes* review will be instituted based on disclaimed claims"). Grounds 8–10 set forth in the Petition, which are directed solely to disclaimed claim 10, are also hereby deemed moot.

And because no *inter partes review* will be instituted based on disclaimed claims, we do not consider claims 1–5 and 7–12 to be within the scope of this proceeding. *Cf. General Elec. Co. v. United Techs. Corp.*, IPR2017-00491, Paper 9 (PTAB July 6, 2017) (precedential) (denying institution of *inter partes* review in view of a statutory disclaimer of all challenged claims). We base our decision to institute on the remaining challenged claim 6 that has not been disclaimed.

B. Real Parties in Interest

Petitioner identifies Edwards Lifesciences Corp. and Edwards Lifesciences LLC, as the real parties-in-interest. Pet. 111. Patent Owner identifies Aortic Innovations, LLC as the real party-in-interest. Paper 4, 1.

C. Related Matters

Petitioner represents that it has filed a Petition for *inter partes* review of U.S. Patent No. 10,792,172 (the "'172 patent") in *Edwards Lifesciences Corp. v. Aortic Innovations, LLC*, IPR2021-01527 (Filed Sept. 10, 2021). Pet. 111. Petitioner states that it has also filed a Petition for *inter partes* review of U.S. Patent No. 10,857,011 ("the '011 patent") in *Edwards Lifesciences Corp. v. Aortic Innovations, LLC*, IPR2021-01584 (Filed

Sept. 28, 2021). *Id.* Petitioner states that the challenged '846 patent is a continuation of the '172 and '011 patents. *Id.*

Further, Petitioner and Patent Owner both identify *Aortic Innovations LLC v. Edwards Lifesciences Corp.*, Case No. 1-21-CV-01377 (D. De., filed Sept. 28, 2021), in which Patent Owner alleges infringement of the '846 patent by Petitioner. Pet. 112; Paper 4, 1.

D. The Asserted Grounds of Unpatentability

Petitioner contends that claim 6 of the '846 patent are unpatentable, based upon the following grounds:

Ground	Claim(s) Challenged	35 U.S.C. §	Reference(s)/Basis
1	6	103	Cribier[1], Walther[2]
2	6	103	Spenser[3], Walther
3	6	103	Spenser, Spenser II[4]
4	6	102(e)	Levi[5]
5	6	103	Levi
6	6	103	Levi, Walther

[1] A. Cribier et al., *Technique of Transcatheter Aortic Valve Implantation with the Edwards-Sapien® Heart Valve Using the Transfemoral Approach*, 34 HERZ 347–56 (2009) ("Cribier") Ex. 1012.

[2] T. Walther et al., *Trans-Catheter Valve-in-Valve Implantation: in vitro Hydrodynamic Performance of the SAPIEN + Cloth Trans-Catheter Heart Valve in the Carpentier-Edwards Perimount Valves*, 40 EUR. JOUR. CARDIO-THORACIC SURG. 1120–26 (2011) ("Walther") Ex. 1007.

[3] Spenser et al. (US 7,510,575 B2, March 31, 2009) ("Spenser") Ex. 1010.

[4] Spenser et al. (WO 2006/005015 A2, January 12, 2006) ("Spenser II") Ex. 1011.

[5] Levi et al. (US 9,393,110 B2, July 19, 2016) ("Levi") Ex. 1008.

Ground	Claim(s) Challenged	35 U.S.C. §	Reference(s)/Basis
7	6	103	Levi, Spenser II

Petitioner also relies upon the Declaration of Dr. Nigel P. Buller (the "Buller Declaration," Ex. 1003). Patent Owner relies upon the Declaration of Dr. Stephen J.D. Brecker (the "Brecker Declaration," Ex. 2002).

E. The '846 Patent

The '846 patent is titled "Device For Endovascular Aortic Repair." Ex. 1001, code (54). The '846 patent issued from Appl. No.17/096,253 (the "'253 application"), which claims priority through a series of continuation and divisional applications to Appl. No. 13/706,896, filed on December 6, 2012. *Id.* at codes (21), (60). The '846 patent also claims priority to Provisional Appl. No. 61/723,446, filed on Nov. 7, 2012, and Provisional Appl. No. 61/567,458, filed on Dec. 6, 2011. *Id.* at code (60).[6]

---

[6] According to Petitioner, "[d]uring prosecution of U.S. Patent No. 10, 792,172 (the "'172 patent), a parent to the '846 patent, Patent Owner stated that the application's 'effective filing date . . . is believed to be based on Provisional Patent Application No. 61/723,446, filed on November 7, 2012.'" Pet. 20 (quoting Ex. 1002, 274). Petitioner also asserts that "[t]his admission also applies to the challenged claims, which are similar in scope to the '172 patent claims. *Id.*

Petitioner argues that "the '846 patent is not entitled to a priority date of December 6, 2011 because the '458 provisional does not adequately support or enable the '846 patent's claims." Pet. 21 (citing *New Railhead Mfg., L.L.C. v. Vermeer Mfg. Co.*, 298 F.3d 1290, 1294 (Fed. Cir. 2002). Petitioner contends that "Patent Owner first added the disclosure of outwardly extending fibers in the November 2012 provisional." *Id.* (citing Ex. 1006 ¶ 24). Because all the asserted references bear a publication or filing date that antedates the earlier priority date of the'458 provisional, we

The ’846 patent discloses an endograft device, including a transcatheter heart valve, used for endovascular repair of ascending aortic aneurysms. Ex. 1001, col. 2, ll. 51–52. Specifically, the Specification discloses that “[t]he endograft device also includes a valve element that is secured to the balloon-expandable frame at the proximal end of the second prosthetic component.” *Id.* at col. 2, ll. 65–67. According to the Specification, none of the devices in clinical use for endovascular repair of ascending aortic aneurysms “have been designed with the purpose of endovascular repair of multiple types of ascending aortic aneurysms.” *Id.* at col. 2, ll. 35–37. The Specification describes a need for a device:

> [T]hat can treat different anatomical variations of ascending aortic aneurysms, create effective proximal and distal seal zones within the aorta, and have a durable valve component, but that also allows for future valve re-interventions. A device is also needed that would allow for treatment of different coronary anatomical variations among the patient population, allow future coronary re-intervention, but that also avoids coronary compression, and enables treatment of possible paravalvular leaks.

Id. at col. 2, ll. 37–46.

Figure 11 of the ’846 patent is reproduced below.

---

need not address at this stage whether the ’172 patent claims are entitled to claim priority to the ’458 provisional.

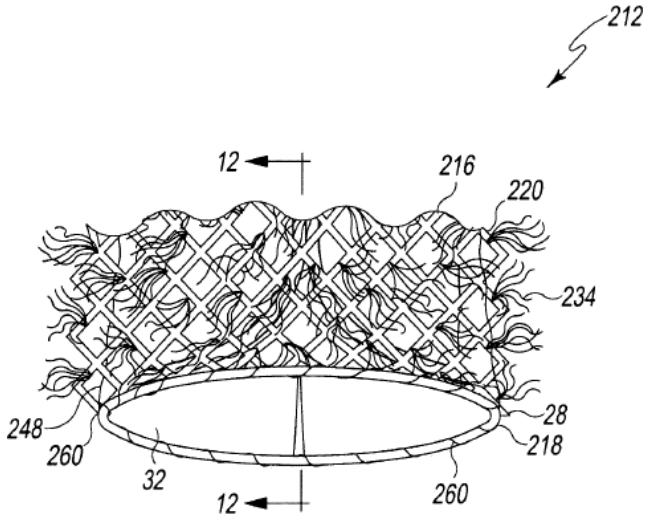

Fig. 11

Figure 11 of the ’846 patent is a perspective view a proximal end of the proximal prosthetic component

As shown above, the component 212 includes a dual-frame structure with a circular inner frame 218 secured to circular outer frame 216 via a plurality of stitches 260. *Id.* at Fig. 11, col. 14, ll. 6–9.

Figure 13 of the ’846 patent depicts a different view of the relevant portion of the invention and is reproduced below.

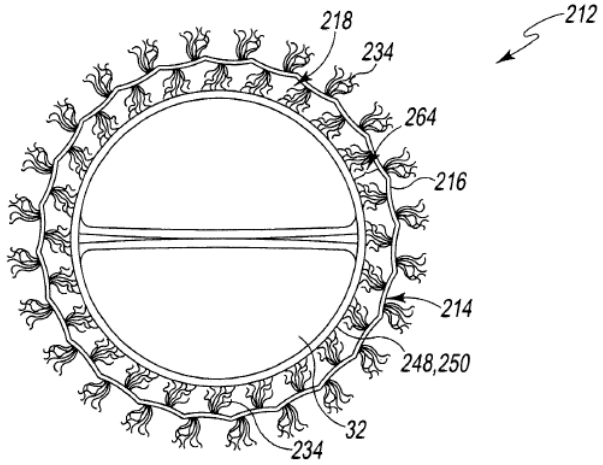

Fig. 13

FIG. 13 of the '846 patent is a plan view of the proximal prosthetic component showing the inner frame in an unexpanded position

As shown above, the device with circular dual frame component 214 includes an outer frame 216 secured to a balloon-expandable inner frame 218. *Id.* at Fig. 13, 14, ll. 6–8.

As also shown in Figures 11 and 13, the inner frame 218 houses the prosthetic valve 32. *Id.* at Fig. 13, col. 13, ll. 42. Collagen fibers 234 extend outwardly and inwardly from outer frame 216. *See id.* at Fig. 13, col. 12, ll. 43, 46–48. Outer frame 216 is a grid with diagonally oriented members as compared to those at the proximal end of the device. *See* Fig. 11. Figures 11 and 13 further illustrate fibers 234 extending outwardly from proximal section 220 and inwardly into the passageway formed by the stent. *Id.* at Figs. 11, 13, col. 14, ll. 30–33. According to the Specification, these collagen fibers 234 "aid in preventing paravalvular leaks and migration of the proximal component 212 within the aortic walls." *Id.* at col. 12, ll. 43–45.

The Specification further describes "[b]alloon-expandable frame 218 … as a balloon-expandable tubular stent 244." Ex. 1001, col. 13, ll. 41–43. "[S]tent 244 is tubular and is constructed of a metallic material, such as, nitinol, stainless steel, or other implant grade metallic material, in an open-cell configuration." *Id.* at col. 13, ll. 46–48. "When the inner frame 218 is unexpanded, the outer surface 248 of the stent 244 is spaced apart from the fibers 234 attached to the outer frame 216." *Id.* at Fig. 13, col. 14, ll. 13–16. When inner frame 218 is expanded, outer surface 248 of stent 244 engages fibers 234 through covering material 250, thereby closing gap 264 so that

fibers 234 and covering material 250 create a seal between inner frame 218 and outer frame 216. *Id.* at Fig. 13, col. 14, ll. 19–32.

F. The Challenged Claim

Claim 6 is the sole challenged claim in this proceeding. *See* Section II.A. *supra*. Claim 6 depends from disclaimed independent claim 1 and therefore incorporates all of the limitations of claim 1. *See Monsanto Co. v. Syngenta Seeds, Inc.*, 503 F.3d 1352, 1357 (Fed. Cir. 2007) ("A claim in dependent form shall be construed to incorporate by reference all the limitations of the claim to which it refers" (quoting 35 U.S.C § 112, ¶ 4 (2000)). Disclaimed independent claim 1 recites:

> 1. A valve assembly comprising:
>
> an outer frame, wherein the outer frame is formed from a metallic material and defines an open cell configuration;
>
> an inner frame that engages a prosthetic heart valve having prosthetic leaflets, wherein the inner frame includes a cylindrically extending inner graft covering extending at least partially radially outwardly of the prosthetic heart valve and radially inwardly of the outer frame for providing sealing to the prosthetic heart valve,
>
> wherein the outer frame is secured to the inner graft covering by stitching at a proximal end of the outer frame;
>
> an outer seal for preventing paravalvular leaks that begins at a proximal portion of the outer frame and extends over at least two rows of cells formed in the outer frame,
>
> wherein the outer seal is attached to the outer frame,
>
> wherein the outer seal is formed of outwardly extending fibers positioned externally to the outer frame,

> wherein the outer seal is free of an outer graft covering between the fibers and the outer frame,
>
> wherein the valve assembly has a radially compressed orientation and a radially expanded orientation,
>
> wherein the valve assembly is balloon expandable and expansion of the valve assembly is configured to press some of the fibers against native leaflets of the aorta of the patient.

Ex. 1001, cols. 21–22, ll. 15–6. Claim 6 recites:

> 6. The valve assembly of claim 1, wherein the valve assembly is delivered endovascularly.

Id. at col. 22, ll. 16–17.

G. Prosecution History of the '846 patent

The '846 patent matured from U.S. Appl. Ser. No. 17/096,253, which was filed on November 12, 2020, with original claims 1–10. Ex. 1001, codes (21), (22); Ex. 1002, 168–245. The applicant filed a Preliminary Amendment on November 30, 2020, replacing the original claims with new claims 11–22 (which later issued as claims 1–12). *Id.* at 128–155. In the remarks accompanying the Preliminary Amendment, applicant argued that:

> The claims are directed towards an improved transcatheter aortic valve replacement (TAVR) that address paravalvular leaks (PVL). Namely, by having an inner frame that is a graft covering around the heart valve, sealing aspects are provided to the valve against the metallic outer frame. This helps to provide a seal around an inner facing surface of the metallic frame, as well as to protect at least portions of the valve leaflets from contact with the metal frame. The outer seal provides sealing between the outer frame and the patient's anatomical wall, while avoiding problems associated with conventional TA VR devices….

Id. at 133.

On January 15, 2021, Patent Owner submitted a terminal disclaimer to obviate a double patenting rejection over prior U.S. Patents 10,792,172 B2, 10,857,011 B2, 10,881,538 B1, and 10,888,441 B1. Ex. 1002, 118–120.

The Examiner issued a Notice of Allowance for all of the claims on February 8, 2021. Ex. 2002, 14–21. In the Reasons for Allowance, the Examiner stated that:

> [The prior art] does not disclose or render obvious an inner frame that engages a prosthetic heart valve having prosthetic leaflets, wherein the inner frame includes a cylindrically extending inner graft covering extending at least partially radially outwardly of the prosthetic heart valve and radially inwardly of the outer frame for providing sealing to the prosthetic heart valve, wherein the outer frame is secured to the inner graft covering by stitching at a proximal end of the outer frame; wherein the outer seal is free of an outer graft covering between the fibers and the outer frame.

Id. at 20.

III. ANALYSIS

A. Claim Construction

The Board applies the same claim construction standard that would be used to construe the claim in a civil action under 35 U.S.C. § 282(b). *See* 37 C.F.R. § 100(b) (2020). Under that standard, claim terms "are generally given their ordinary and customary meaning" as understood by a person of ordinary skill in the art at the time of the invention. *Phillips v. AWH Corp.*, 415 F.3d 1303, 1312–13 (Fed. Cir. 2005) (en banc). "In determining the meaning of the disputed claim limitation, we look principally to the intrinsic evidence of record, examining the claim language itself, the written

description, and the prosecution history, if in evidence." *DePuy Spine, Inc. v. Medtronic Sofamor Danek, Inc.*, 469 F.3d 1005, 1014 (Fed. Cir. 2006) (citing Phillips, 415 F.3d at 1312–17). Extrinsic evidence is "less significant than the intrinsic record in determining 'the legally operative meaning of claim language.'" *Phillips*, 415 F.3d at 1317 (quoting *C.R. Bard, Inc. v. U.S. Surgical Corp.*, 388 F.3d 858, 862 (Fed. Cir. 2004)).

Neither Petitioner nor Patent Owner proposes a construction for any claim terms apart from their plain and customary meaning. Pet. 23; *see generally* Prelim. Resp. Nor do we perceive a need to construe any claim terms of the '846 patent for purposes of determining whether to institute trial. *See Vivid Techs., Inc. v. Am. Sci. & Eng'g, Inc.*, 200 F.3d 295, 803 (Fed. Cir. 1999) (holding that "only those terms need to be construed that are in controversy, and only to the extent necessary to resolve the controversy"); *see also Nidec Motor Corp. v. Zhongshan Broad Ocean Motor Co.*, 868 F.3d 1013, 1017 (Fed. Cir. 2017) (applying *Vivid Techs.* in the context of an *inter partes* review).

B. A Person of Ordinary Skill in the Art

Petitioner asserts that a person of ordinary skill in the art would have been an interventional cardiologist with a working knowledge of heart valve designs and endovascular prostheses. Pet. 23. Petitioner contends that this skilled artisan would, where necessary, work as a member of a team in combination with a medical device engineer to experiment with or manufacture a prosthetic heart valve. *Id.* (citing Ex. 1003 ¶ 47). Patent Owner does not argue otherwise. *See generally* Prelim. Resp.

At this stage of the proceeding and for purposes of our analysis in this Decision, we adopt Petitioner's definition because we find that that

definition is consistent with the level of skill in the art, as reflected by the prior art. *See Okajima v. Bourdeau*, 261 F.3d 1350, 1355 (Fed. Cir. 2001) (explaining that specific findings regarding ordinary skill level are not required "where the prior art itself reflects an appropriate level and a need for testimony is not shown" (quoting *Litton Indus. Prods., Inc. v. Solid State Sys. Corp.*, 755 F.2d 158, 163 (Fed. Cir. 1985))).

C. Grounds 4 and 5: Anticipation by, or Obviousness over, Levi

1. Introduction

In Grounds 4 and 5, Petitioner asserts that claim 6 is either anticipated by, or obvious over, Levi alone. Pet. 78–85, 92–93. Additionally, in Grounds 6 and 7, Petitioner asserts that claim 6 would have been obvious over the teachings of Levi in combination with either Walther or Spenser II. *Id.* at 86–89, 94–95. Because our analysis with regard to these Levi-based grounds will be relevant to Petitioner's other obviousness challenges, we address Grounds 4–7 first.

Challenged claim 6 requires, either expressly or by incorporation by reference, a heart valve assembly with the following structural requirements: 1) an outer frame formed from a metallic material that defines a gridded configuration (i.e., the "outer frame" requirement) (Ex. 1001, col. 21, ll. 6–7, col. 22:14–16); 2) an inner frame (which constitutes a graft covering) that houses and extends around a prosthetic heart valve, wherein the graft covering is made from a polyester, PTFE, ePTFE, or another polymer material (i.e., the "inner frame" requirement) (*id.* at col. 21, ll. 9–14, col. 22, ll. 17–23); 3) the outer frame being secured to the inner frame/graft covering by a plurality of stitches (i.e., the "stitching" requirement) (*id.* at col. 21, ll. 15–17, col. 22, ll. 24–26); 4) a cylindrically extending inner graft covering

extending at least partially radially outwardly of the prosthetic heart valve and radially inwardly of the outer frame (i.e., the "graft extension" requirement) (*id.* at col. 21, ll. 18–20, col. 22, ll. 27–29); and 5) a sealing material that includes a plurality of radially extending fibers that extend outwardly of the outer frame (i.e., the "sealing material" requirement) (*id.* at col. 21, ll. 21–26, col. 22, ll. 30–35); *see also* Pet. 18 (Petitioner's annotated Fig. 11). Claim 6 also require that this valve assembly be delivered "endovascularly." Ex. 1001, col. 21, ll. 39–40, col. 22, l. 18.

2. Overview of Levi (Ex. 1008)

Levi is a U.S. Patent that issued on July 19, 2016, from an application filed on October 5, 2011. Ex. 1008, codes (10), (22), (45). Thus, on its face, Levi qualifies as prior art under pre-AIA 35 U.S.C. § 102(e).

Levi is directed to a prosthetic heart valve. Ex. 1008, col. 1, ll. 16–18. Figure 11 of Levi is reproduced below:

FIG. 11

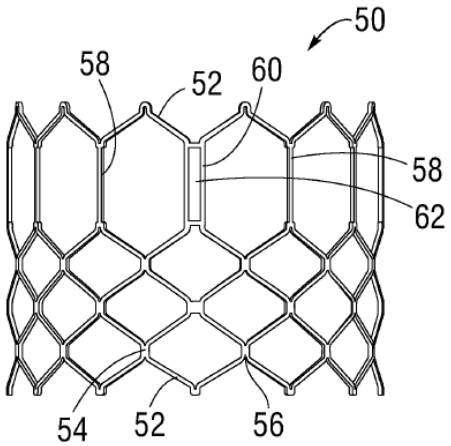

Levi's Figure 11 depicts a frame for use in a prosthetic heart valve.

Specifically, Figure 11 illustrates frame 50 that:

> comprises multiple rows of circumferentially extending, angled struts **52** that are connected to each other at nodes, or connecting

> portions, **54** and **56**. The uppermost row of struts 52 are connected to an adjacent row of struts by a plurality of axially extending struts **58** and commissure window frame portions 60. Each commissure frame portion 60 defines a slot, or commissure window, **62** for mounting a respective commissure of the valvular structure ….

Id. at cols. 8–9, ll. 61–3.

Figure 2 of Levi is reproduced below:

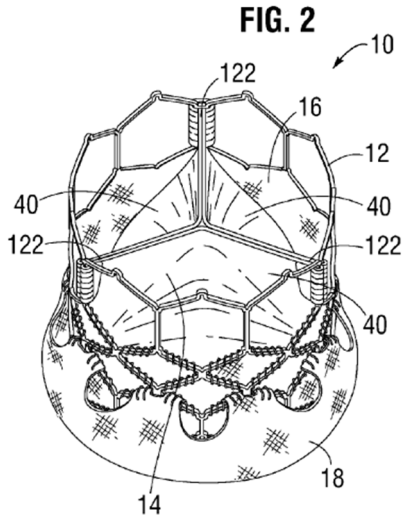

Figure 2 of Levi depicts an exemplary embodiment of a prosthetic heart valve

Figure 2 depicts a prosthetic heart valve 10 including valvular structure 16, surrounded by circular stent or frame 12. *Id.* at Fig. 2, col. 5, ll. 52–58. The bottom portion of frame 12 is covered by inner skirt 16 on the inside of frame 12 and outer skirt 18 on the outside of frame 12. *See id.* at Fig. 2, col. 5, ll. 52–58, col. 9, ll. 24–25, col. 13, ll. 49–50. Valvular structure 16 includes "three leaflets 40, collectively forming a leaflet structure, which can be arranged to collapse in a tricuspid arrangement." *Id.* at Fig. 2, col. 5, ll. 59–61. "[L]eaflets 40 are secured to one another at their adjacent sides to form commissures 122 of the leaflet structures." *Id.* at col. 11, ll. 35–37.

Figure 20 of Levi is reproduced below:

FIG. 20

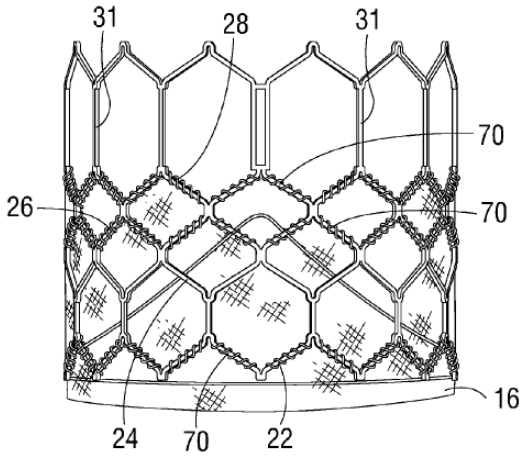

Figure 20 of Levi depicts the assembly of the inner skirt and frame of a prosthetic heart valve

Figure 20 depicts a valve with skirt 16 arranged on frame 12. *Id.* at Fig. 20, col. 10, ll. 5–17. Specifically, frame 12 includes struts 22, 24, 26, and 28. *Id.* at Fig. 20, col. 7, ll. 16–21. "[S]econd, third, and fourth rows of structures 24, 26, and 28 define two intermediate rows of cells defining openings 38. The fourth and fifth rows of struts 28 and 32, along with frame portions 30 and 31, define an upper row of cells defining openings 40." *Id.* at Fig. 20, col. 7, ll. 19–23. "[T]he upper edge of skirt 16 can be tightly secured to structures 28 with sutures 70." *Id.* at Fig. 20, col. 10, ll. 16–18. "[S]kirt 16 can also be secured to the first, second, and third rows of struts 22, 24, and 26, respectively, with sutures 70." *Id.* at col. 10, ll. 28–30.

Figure 42 of Levi is reproduced below:

FIG. 42

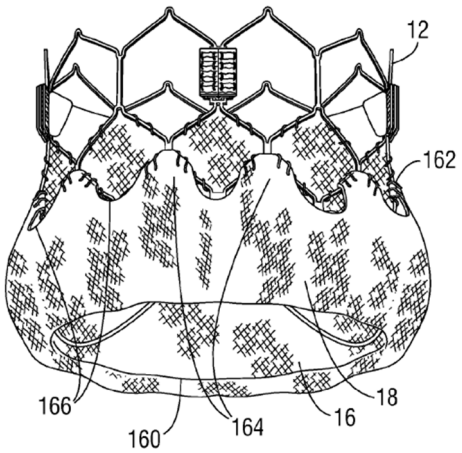

Figure 42 of Levi depicts aspects of an exemplary embodiment of a prosthetic heart valve

Figure 42 illustrates portions of the valve assembly including an outer skirt 18 with projections 164 that are sutured to the outer side of frame 12. *Id.* at Fig. 42, col. 13, ll. 54–61. Skirt 18 includes lower edge 160 that can be sutured to the lower edge of inner skirt 16 at the inflow end of the valve. *Id.* Outer skirt 12 includes excess material between the lower and upper edges. *Id.* at Figs. 2, 43, col. 13, ll. 62–66. Levi discloses that when

> valve **10** is deployed within the body the excess material of the outer skirt **18** can fill in gaps **5** between the frame **12** and the surrounding native annulus to assist in forming a good fluid-tight seal between the valve and the native annulus. The outer skirt **18** therefore cooperates with the inner skirt **16** to avoid perivalvular leakage after implantation of the valve **10**.

Id. at col. 14, ll. 4–9.

3. Grounds 4 and 5: Anticipation or obviousness of claim 6 over Levi

Petitioner contends that Levi discloses a metal frame that defines an open cell configuration, and an "inner skirt 16 . . . to assist in forming a good

seal between the valve and the native annulus by blocking the flow of blood through the open cells of the frame 12 below the lower edge of the leaflets." Pet. 79 (citing Ex. 1003 ¶¶ 257–260; Ex. 1008, col. 6, ll. 17–24, Fig. 11, col. 9, ll. 7–11). Petitioner notes that Levi discloses that the inner skirt is constructed of "a tough, tear resistant material such as polyethylene terephthalate (PET)[.]" *Id.* (quoting Ex. 1008, col. 9, ll. 11–16). Petitioner asserts that Levi's inner skirt 16 cylindrically extends at least partially radially outwardly of the prosthetic valvular structure 14 and radially inwardly of the outer frame 12. *Id.* at 80 (citing Ex. 1008, col. 9, ll. 25–29, Fig. 2; Ex. 1003 ¶ 260). Petitioner also states that Levi discloses that the inner skirt is secured to the frame by stitching (suture 70) at the proximal end of the outer frame. *Id.* (citing Ex. 1008, col. 9, ll. 24–25, col. 10, ll. 11–30, Figs. 20, 39).

Petitioner asserts that Levi further discloses an outer skirt of woven PET (polyester) fabric attached to the exterior surface of the frame, and which includes excess material that bulges radially outwardly as the frame expands. Pet. 81–82 (citing Ex. 1008, col. 13, ll. 50–66, Fig. 3, cols. 13–14, ll. 62–7). According to Petitioner, Levi discloses that the excess material allows the skirt to "fill gaps between the frame 12 and the surrounding native annulus to assist in forming a good fluid-tight seal between the valve and the native annulus." *Id.* (quoting Ex. 1008, col. 14, ll. 4–7).

Petitioner further argues that a person of ordinary skill in the art would have understood that each fiber of the outer shirt is an "outwardly extending fiber" because the outer skirt "bulge[s] outwardly" from the frame. Pet. 84 (citing Ex. 1003 ¶ 268). Petitioner points to annotated Figure 3 of Levi, reproduced below, as illustrating this point.

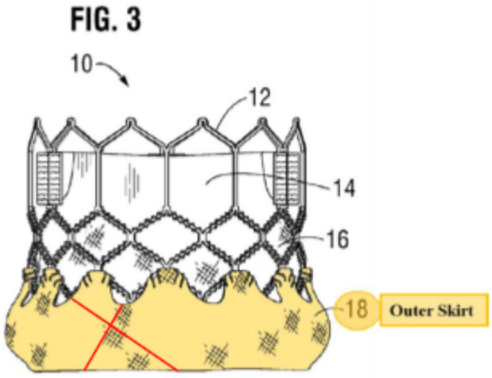

Figure 3 of Levi, as annotated by Petitioner, depicts a view of the proximal prosthetic component of an endovascular prosthetic device.

Petitioner asserts that a skilled artisan would have similarly understood that the outer surface of the woven skirt would not be entirely smooth, but would necessarily have fibers, or strands, that extend radially outwardly from the surface of the skirt. *Id.* (citing Ex. 1003 ¶ 269). According to Petitioner, polyester yarns, such as PET yarn, exhibits a property known as "hairiness," which describes the "amount and length of fibre ends and loops protruding from the body of the yarn." *Id.* at 84–85 (quoting Ex. 1028, 124). According to Petitioner, even if the woven PET fabric does not itself constitute "outwardly extending fibers," a person of skill in the art would have therefore understood that the hairiness of Levi's outer skirt includes "outwardly extending fibers" positioned externally to the outer frame. *Id.* at 85 (citing Ex. 1003 ¶ 269).

Petitioner further contends that Levi's valve is also free of an "outer graft covering" between the fibers of the outer skirt and the outer frame, because Levi teaches that the outer skirt is sutured directly to the outer frame and the inner skirt. Pet. 85 (citing Ex. 1008, col. 13, ll. 55–61; Ex. 1003 ¶¶ 270–271).

Petitioner next argues that, in addition to disclosing these limitations of disclaimed independent claim 1, Levi further discloses a "collapsible transcatheter heart valves [which] can be percutaneously [i.e., endovascularly] introduced in a compressed state on a catheter and expanded in the desired position by balloon inflation or by utilization of a self-expanding frame or stent." Pet. 92 (citing Ex. 1008, col. 1, ll. 57–67). Petitioner points to Levi's disclosure that Levi discloses that its frame is preferably constructed of nickel-cobalt-chromium-molybdenum alloy, which allows for less material to be used so that "the crimped profile of the frame can be reduced, thereby providing a lower profile valve assembly for percutaneous delivery[.]" *Id.* at 93 (quoting Ex. 1008, col. 6, ll. 46–49, also citing col. 7, ll. 10–12).

Petitioner further notes that Levi discloses that "[b]y minimizing the diameter of the valve when mounted on the delivery shaft, the assembly can [be] contained within a smaller diameter catheter and thus can be passed through smaller vessels in the body and can be less invasive in general." *Id.* (quoting Ex. 1008, col, 14, ll. 60–64). Finally, Petitioner argues, Levi discloses methods to reduce the valve frame diameter at the inlet, or to modify the leaflets to reduce the frame size, to create room for additional components that would have led a person of skill in the art to expect success in delivering Levi's valve endovascularly. Pet. 93 (citing Ex. 1008, cols. 16–17, ll. 24–18; Ex. 1003 ¶ 307).

Patent Owner disputes Petitioner's contention that Levi discloses "the outer seal is formed of outwardly extending fibers positioned externally to the outer frame" as implicitly required by claim 6. Prelim. Resp. 41. Patent Owner asserts that the '846 patent issued over Levi because, *inter alia*, Levi lacks "outwardly extending fibers." *Id.* (citing Ex. 1002, 145).

Patent Owner points, by way of example, to Figure 9 of the ’846 patent which depicts the outwardly extending fibers 234 as extending outwardly from the proximal section 220. A portion of Figure 9 of the ’846 patent is reproduced below:

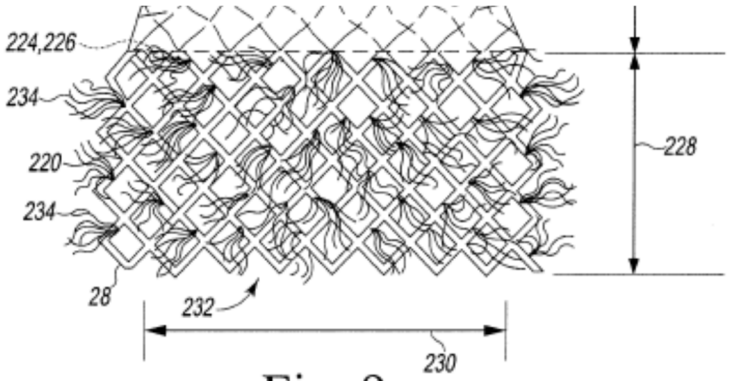

Fig. 9

Figure 9 (detail) of the ’846 patent depicts a portion of a balloon-expandable inner frame of the proximal prosthetic component

Patent Owner asserts that Petitioner’s reliance upon Figure 3 of Levi is misplaced; Patent Owner notes that Levi’s Figure 3 was considered by the Examiner during prosecution, and that a side-by-side comparison between Figure 3 of Levi and Figure 9 of the ’846 makes clear that Levi does not depict “outwardly extending fibers.” Prelim. Resp. 43–44.

Similarly, Patent Owner argues, the disclosure of Levi does not discuss fibers that “extend outwardly” from its “outer skirt,” but rather confirms the absence of such fibers, disclosing that “[t]he outer skirt 18 can be laser cut or otherwise formed from a strong, durable piece of material, such as woven PET…. The outer skirt 18 can have a substantially straight lower edge 160 and an upper edge 162.” Prelim. Resp. 44 (quoting Ex. 1008, col. 13, ll. 50–54). Patent Owner notes that, during prosecution of

the ’846 patent, Patent Owner specifically distinguished its claimed invention from Levi based upon, *inter alia*, the absence of “outwardly extending fibers.” *Id.* (citing Ex. 1002, 145).

Nor, argues Patent Owner, does Levi inherently disclose “outwardly extending fibers.” Prelim. Resp. 46. Patent Owner argues that the disclosures relied upon by Petitioner, *viz.*, “that Levi’s outer skirt is made of ‘woven PET threads or fibers’” and that “outer skirt ‘bulge[s] outwardly’ from the frame” make no mention of outwardly extending fibers either at the bulge or otherwise. *Id.* (citing Pet. 84 (citing Ex. 1008, col. 9, ll. 52–56, cols. 13–14, ll. 62–2)). Patent Owner points out that the latter passage of Levi is not even about the “outer skirt” and instead discusses the “inner skirt.” *Id.* (citing Ex. 1008, col. 9, ll. 52–56). Patent Owner asserts that neither Petitioner nor its Declarant, Dr. Buller, proffer any explanation of why this “bulging” would cause any fibers to extend outwardly in the absence of any express disclosure by Levi. *Id.*

Patent Owner also takes issue with Petitioner’s contention that the outer surface of Levi’s outer skirt is hairy, arguing that the Tyagi reference[7] shows that PET yarn “exhibits a property known as ‘hairiness.’” Prelim. Resp. 47 (citing Pet. 84–85 (quoting Ex. 1028, 124)). First, argues Patent Owner, Petitioner fails to prove that Levi’s outer skirt is made of PET yarn, as Levi only provides that “[t]he outer skirt 18 can be laser cut or otherwise formed from a strong, durable piece of material, such as woven PET ...” *Id.* (quoting Ex. 1008, col. 13, ll. 50–53). Patent Owner asserts that fails to

[7] G.K. Tyagi, *Yarn Structure and Properties From Different Spinning Techniques*, 119–154, *in* C.A. Lawrence, ed., ADVANCES IN YARN SPINNING TECHNOLOGY (2010) (“Tyagi”) Ex. 1028.

prove that either "woven PET" or "laser cut" woven PET would exhibit the "hairiness" quality Petitioner Argues. *Id.* at 48.

Second, Patent Owner argues that even assuming Levi's "woven PET" is made from PET yarn, Petitioner fails to prove that "woven PET" is inherently hairy such that fibers would "outwardly extend." Prelim. Resp. 48. According to Patent Owner, it is widely recognized in the field that woven PET is smooth, with no "hairiness" or outwardly extending fibers. *Id.*

By way of example, Patent Owner points to Figure 1A of Meslmani,[8] which depicts a surface scanning electron microscope image of woven PET utilized for "cardiovascular applications." Prelim. Resp. 48–49 (citing Ex. 2019 Fig. 1A). Fig. 1A of Meslmani is reproduced below:

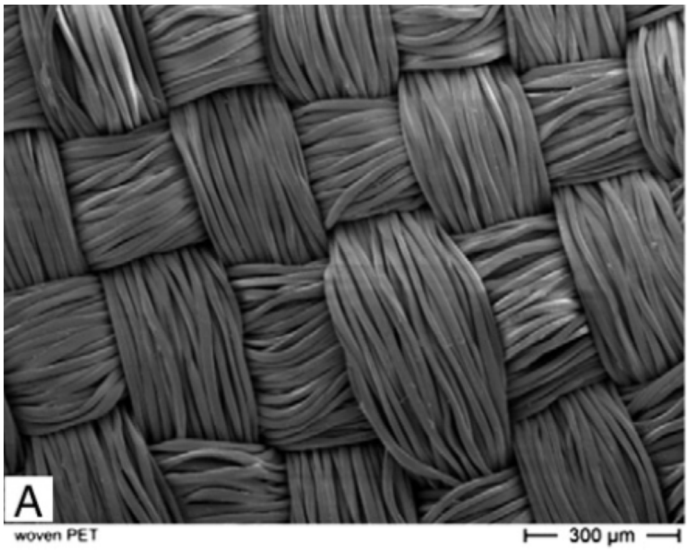

Figure 1 A of Meslmani depicts a scanning electron micrograph of unmodified woven (A) and knitted (B) forms of crimped PET grafts

[8] B. A. Meslmani, *Development of thrombus-resistant and cell compatible crimped polyethylene terephthalate cardiovascular grafts using surface co-immobilized heparin and collagen*, 43 MATERIALS SCI. AND ENG'G C 538–46 (2014) ("Meslmani") Ex. 2019.

Patent Owner notes that Figure 1A demonstrates that the woven PET graft's surface is smooth, and that the fibers, which are tightly wound together, do not "outwardly extend" from the surface. *Id.* at 49.

Patent Owner also points to similar examples taught by Rodrigues[9] and De Bock.[10] Prelim. Resp. 49–50 (citing Ex. 2020, 23–24, Fig. 8; Ex. 2021 Fig. 1.18A). To the contrary, Patent Owner asserts, the Tyagi reference relied upon by Petitioner was published by "The Textile Institute," a "unique orginisation in textiles, clothing and footwear." *Id.* at 50–51 (quoting Ex. 1028, 2). Patent Owner contends that Tyagi is directed towards yarns suitable for clothing and knitted goods, and not for aortic valve repair, and is silent with respect to "woven PET," that might be used in cardiovascular surgery. *Id.* at 51. Patent Owner thus argues that a comparison between Meslmani's, Rodrigues', or De Bock's, "woven PET" images and Tyagi's "hairy" image demonstrates that woven PET is not "hairy," much less with outwardly extending fibers. *Id.* at 53.

Additionally, Patent Owner points to the SAPIEN 3 prosthetic heart valve, the commercial embodiment of Levi, as reflected by FDA approval documentation. Prelim. Resp. 54 (citing Ex. 2022, 26; Ex. 2023, 97, 220; Ex. 2024, 131, 260; Ex. 2025, 143). A photograph of the SAPIEN 3 valve is reproduced below:

---

[9] A. Rodrigues et al., *Mechanical Behavior of PET Fibers and Textiles for Stent-Grafts Using Video Extensometry and Image Analysis*, 30 SCI. AND TECH. OF MATERIALS 23–33 (2018) ("Rodrigues") Ex. 2020.

[10] S. De Bock, A (BIO)MECHANICAL ANALYSIS OF STENT GRAFTS FOR THE TREATMENT OF ABDOMINAL AORTIC ANEURYSMS, Doctoral Dissertation, Faculteit Ingenieurswetenschappen en Architectuur, Universiteit Ghent (Academic Year 2013-2014) ("De Bock") Ex. 2021.

A photograph of the SAPIEN 3 prosthetic heart valve depicting the similarities to Figure 3 of Levi (*see supra*)

Patent Owner argues that Levi describes its outer skirt as "woven PET" and, similarly, Petitioner describes the SAPIEN 3's outer skirt as "flat woven." Prelim. Resp. 54. Patent Owner asserts that a comparison of the SAPIEN 3 outer skirt with Tyagi further confirms that Levi's corresponding "woven PET" outer skirt is not hairy. *Id.* at 54–55. Patent Owner's Declarant, Dr. Becker, opines that: "I have significant experience handling and implanting the SAPIEN 3 valve. I could not see anything on the outer skirt of SAPIEN 3 that a POSITA would consider to be 'outwardly extending fibers.'" *Id.* at 55–56 (quoting Ex. 2002 ¶ 79).

Finally, Patent Owner contends that Petitioner fails to explain how Levi's outer PET skirt is "free of an outer graft covering," when it is itself an "outer graft covering." Pet. 67. Patent Owner points out that Petitioner relies on Levi's woven PET inner skirt as the claimed "inner graft covering." *Id.* (citing Pet. 79–80 (citing Ex. 1008, col. 9. ll. 53–54)). According to Patent Owner, Petitioner provides no reason why Levi's woven PET outer skirt would not likewise be an "outer graft covering." *Id.*

Based on the present record, we find that Petitioner has sufficiently demonstrated that Levi teaches all the claim requirements *except* for the

limitations reciting "wherein the outer seal is formed of outwardly extending fibers positioned externally to the outer frame" and "wherein the outer seal is free of an outer graft covering between the fibers and the outer frame."

Specifically, we agree with Petitioner that Levi discloses a heart valve with a metallic frame that meets the structural claim requirements comprising an outer frame, a polymeric inner skirt that meets the claim requirement for an inner frame/graft covering, and sutures that meet the claim requirement for plurality of stitches that secure the outer frame to the graft covering. *See, e.g.*, Ex. 1008, cols. 6–8, ll. 12–7; col. 9, ll. 7–35. We also agree with Petitioner that Levi teaches that the device is delivered endovascularly, i.e., percutaneously, as required by claim 6. Ex. 1008, col. 1, ll. 57–67, col. 6, ll. 46–49.

We do not, however, find persuasive Petitioner's contention that Levi's disclosure of an outer skirt made of a woven PET fabric that "bulge[s] outwardly" from the frame meets the requirements of a sealing material with outwardly extending fibers positioned externally to the outer frame. We understand the requirement for "outwardly extending," in accordance with its plain and customary meaning, to mean that the tips of the fibers must extend in a generally outward direction from the frame as shown, for example, in Figures 8, 9, 11–14, and 20 of the '846 patent. *See* Ex. 1001, Figs. 8, 9, 11–14, 20. We agree with Patent Owner that nothing in Levi suggests that the "woven PET fabric" used to form the outer skirt expressly or inherently meets this requirement. We are not persuaded by Petitioner's contention that the laser-cut woven PET disclosed for use in Levi's outer skirt would necessarily exhibit the type of "hairiness" described for PET yarn used in other textile applications. *See* Ex. 1028, 10. In this respect, we accord significant weight to the evidence cited by Patent Owner

showing that the type of woven PET fibers utilized for cardiovascular applications are tightly woven and do not extend outward from the surface. Prelim. Resp. 48–49 (citing Ex. 2019, Fig. 1A; Ex. 2020, Fig. 8; Ex. 2021, Fig. 1.18A).

Similarly, Petitioner provides no persuasive evidence that Levi discloses the limitation of disclaimed independent claim 1 (from which challenged claim 6 depends) reciting "wherein the outer seal is free of an outer graft covering between the fibers and the outer frame." We agree with Patent Owner that, having argued that "Levi teaches that the outer skirt is sutured directly to the outer frame and the inner skirt" and "Levi does not include any 'outer graft covering' on the exterior of the outer frame," Petitioner has failed to recognize that Levi's outer skirt is an "outer graft covering." *See* Prelim. Resp. 68.

Based on the present record, we do not find that Levi alone teaches, or otherwise provides a motivation to incorporate, a sealing material with outwardly extending fibers positioned externally to the outer frame, and in which the outer seal is free of an outer graft covering between the fibers and the outer frame. Consequently, we are not persuaded that Petitioner has demonstrated that it is likely to prevail with respect to Grounds 6 and 7.

D. Grounds 6 and 7: Obviousness of Claim 6 over the Combination of Levi and Walther or Spenser II

We next turn to Petitioner's arguments that a POSITA would have found it obvious to replace Levi's outer skirt with either Walther's outer cloth or Spenser II's compressible material to satisfy this requirement. Pet. 87–89.

1. Overview of Walther (Ex. 1007)

Walther is an article published in the European Journal of Cardio-thoracic Surgery that bears a copyright date of 2011. Ex. 1007, 1120. Petitioner contends that Walther was published online on April 3, 2011, and qualifies as prior art under pre-AIA 35 U.S.C. § 102(b). Pet. 22. Patent Owner argues that Petitioner has failed to demonstrate that Walther is available as prior art. Prelim. Resp. 86–88.

Walther is directed to a method of deploying a trans-catheter valve in a previously implanted degenerative bioprosthetic valve. Ex. 1007, 1120. Specifically, Walther describes implanting an Edwards SAPIEN THV cloth valve, "which is identical to the SAPIEN model, but has an added outer cloth for implantation into a degenerative bovine pericardium, Carpentier-Edwards Perimount (CEP) bioprosthetic valve." *Id.* Walther discloses that:

> The CEP surgical valves are made with a base that is more rigid than other valves. When a SAPIEN™ valve is expanded in the CEP valve, the rigid base does not easily conform to the profile of the expanded stent frame, which leaves gaps between the two valves, resulting in higher paravalvular leak. The addition of an outer cloth to the SAPIEN™ cloth valve is designed to reduce paravalvular leak by creating a seal between the two valves and improve resistance to migration with better 'fit' within surgical Perimount valves.

Id. Additionally, Walther discloses that the outer cloth "reduce[s] paravalvular leak," "increase[s] 'fit' within EW Perimount valves [a benchtop valve]," and "promote[s] tissue ingrowth, which further decreases paravalvular leakage." *Id.*

Figure 1 of Walther is reproduced below:

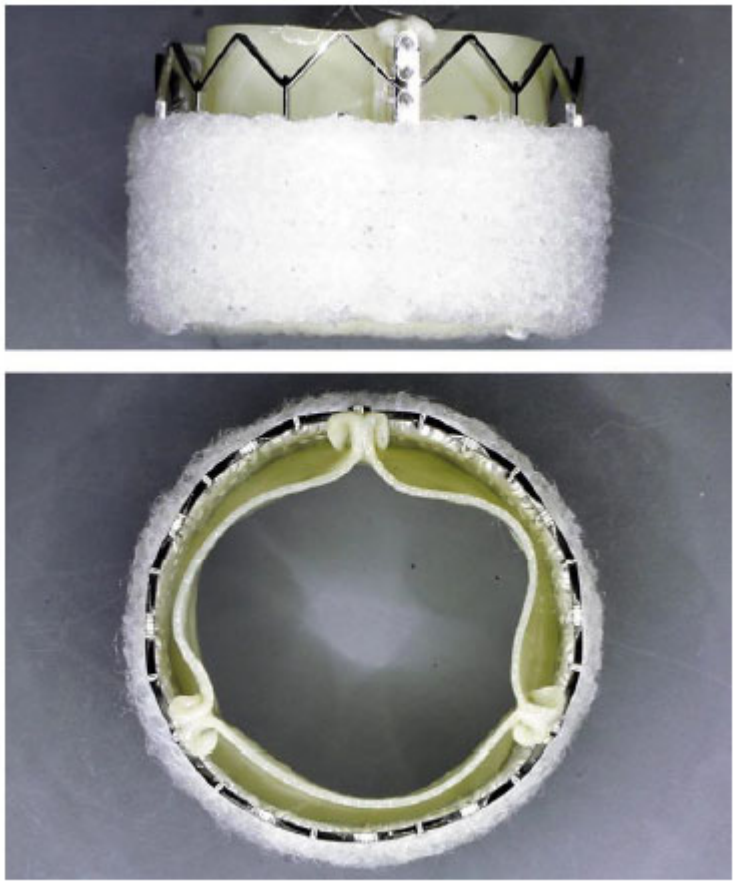

Fig. 1. Cloth valve.

Figure 1 of Walther depicts two views of the SAPIEN THV

Figure 1 of Walther provides two photographic views (side view and top-down view) of the SAPIEN THV with a cloth encircling the lower two thirds of the valve. *Id.* at Fig. 1, 1121. Walther describes deploying the SAPIEN valves inside "various CEP valves" via the 33 F Ascendra system. *Id.* at 1121.

2. Overview of Spenser II (Ex. 1011)

Spenser II is a PCT Publication that published on Jan. 12, 2006. Ex. 1011, codes (10), (43). Spenser II facially qualifies as prior art under pre-AIA 35 U.S.C. §§ 102(b).

Spenser II is directed to "the prevention, detection, and repair of paravalvular leaks around cardiac valve prostheses." Ex. 1011 ¶ 1. Spenser II discloses that prosthetic valves may be implanted "either through open heart surgery or by use of newer percutaneous methods," but with "both methods paravalvular leaks are a known side effect." *Id.* ¶ 11. Spenser II further notes that "[p]ercutaneous introduction of medical devices is a preferred surgical procedure" and "considered safer and less invasive." *Id.* ¶ 12.

Figure 22 of Spenser II is reproduced below:

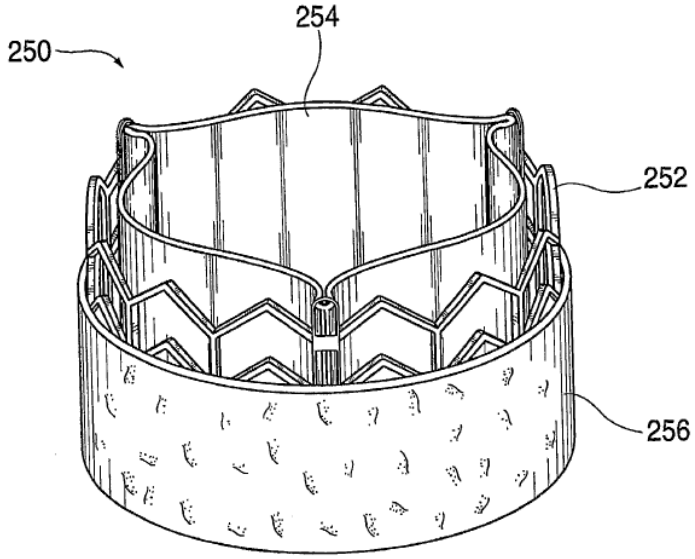

FIG. 22

Figure 22 illustrates a valve device, in accordance with a preferred embodiment

Spenser II's Figure 22 embodiment, as shown above, includes a layer of compressible material, such as a cloth material, along an exterior surface of a stented valve. *Id.* ¶ 85.

Specifically, Figure 22 illustrates a stented valve 250 including a circular stent structure 252 surrounding a valvular structure 254. *Id.* at

Fig. 22, ¶ 144. "[S]tent structure 252 is preferably made of a deformable material, such as stainless steel, adapted for radial expansion using a balloon catheter. The valvular structure 254 forms three leaflets and is illustrated in the open configuration." *Id.* ¶ 144. The device further includes circular layer of compressible material 256 surrounding the outside of stent structure 252. *Id.* at Fig. 22, ¶ 145. "The material may extend partially around the stent structure or may extend entirely around the stent structure, such as in the form of a sleeve," and may be formed of PET. *Id.* "[T]he compressible material 256 may resemble a cloth or fabric having small fibers extending from the surface of the material." *Id.* This "compressible material expands after deployment at a treatment site" and "fills the gaps between the stented valve and the surrounding tissue," which "creates a mechanical seal that prevents paravalvular leakage." *Id.* "In one preferred embodiment, the compressible material is formed of polyethylene terephthalate (PET) and has a thickness ranging from about 1 to 5 mm." *Id.*

3. Obviousness of claim 6 over Levi and Walther or Spenser II

Petitioner argues that, in addition to the disclosures of Levi discussed *supra*, a person of ordinary skill in the art would have found it obvious to replace Levi's bulging outer skirt with Walther's outer cloth or Spenser II's compressible material. Pet. 86 (citing Ex. 1003 ¶¶ 272–285). According to Petitioner, a skilled artisan would have been motivated to use Walther's outer cloth because the cloth prevents paraventricular leakage and promotes tissue ingrowth. *Id.* (citing Ex. 1007, 1120; Ex. 1003 ¶ 274). Petitioner also asserts that a person of skill in the art would have been similarly motivated to use Spenser II's compressible material because its radially extending fibers prevent paraventricular leakage and "may be adapted to encourage

coagulation of blood to further fill the gaps and prevent leakage." *Id.* (quoting Ex. 1011 ¶ 145; also citing Ex. 1003 ¶ 282). Petitioner also contends that a skilled artisan would have been motivated to attach Walther's outer cloth or Spenser II's compressible material to Levi's outer frame such that the cloth/material begins at the proximal portion of the outer frame and extends over at least two rows of cells of the frame. *Id.* (citing Ex. 1003 ¶ 282).

Petitioner asserts that the combination of Levi with Walther or Spenser II would have merely entailed substitution of one known element (outer cloth/compressible material) for another (Levi's outer skirt) to yield the predictable results of reducing PVL. Pet. 86 (citing *KSR*, 550 U.S. at 416). Petitioner notes that a finite number of methods to address PVL existed in November, 2012, and that Walther, Spenser II, and Levi disclose three such methods. *Id.* at 86–87 (citing Ex. 1003 ¶¶ 275, 283). Petitioner contends that a person of ordinary skill in the art would have found it obvious to select any one of these options. *Id.* at 87.

Furthermore, argues Petitioner, a skilled artisan would have reasonably expected success in substituting Walther's outer cloth or Spenser II's compressible material for Levi's outer skirt. Pet. 87 (citing Ex. 1003 ¶¶ 276–279, 284–285). Petitioner notes that the valve frames disclosed by Walther, Spenser II, and Levi share many common features, including being balloon-expandable and formed of interconnected metal struts. *Id.* Petitioner further contends that Walther discloses that the cloth-covered SAPIEN valves displayed "excellent hydrodynamic performance" and that in-patient implantation of the valve "is feasible," suggesting that other cloth-covered valves would attain similar success. *Id.* (citing Ex. 1007, 1125; Ex. 1003 ¶ 276).

Petitioner also points out that Levi suggests adding other components, like an outer seal, to the inflow (proximal) portion of the outer frame. Pet. 87 (citing Ex. 1008, col. 16, ll. 41–45). Petitioner notes that Levi discloses methods to reduce the frame's diameter at the inlet, or to modify the leaflets to reduce the frame size, to create room for an outer seal. *Id.* (citing Ex. 1008, cols. 16–17, ll. 24–18). Petitioner asserts that one of skill in the art would have understood they could utilize one of Levi's strategies to add Walther's outer cloth or Spenser II's compressible material to Levi's frame. (Ex. 1003 ¶¶ 277–278, 284–285).

With respect to the limitation of claim 6 reciting "wherein the valve assembly is delivered endovascularly," Petitioner contends that a person of ordinary skill in the art would have understood that, having replaced Levi's outer skirt with Walther's outer cloth or Spenser II's compressible material, the resulting device would remain suitable for endovascular delivery. Pet. 94 (citing Ex. 1003 ¶¶ 308–312). Petitioner suggests that, even if the substitution slightly increased the valve's diameter, a skilled artisan would understand that the valve could still be delivered through the common iliac artery. *Id.* (citing Ex. 1003 ¶¶ 308–312; Ex. 1043).

Petitioner contends that Levi discloses that "[w]hen crimped, the frame 12 has a reduced diameter region extending along a portion of the frame…that generally corresponds to the region of the frame covered by the outer skirt 18" so that the outer skirt "does not increase the overall crimp profile of the valve." Pet. 94 (quoting Ex. 1008, col. 8, ll. 46–54, *see also id.* at col. 2, ll. 22–35, col. 14, ll. 22–35, col. 16, ll. 38–45, col. 17, ll. 14–18.) According to Petitioner, Walther's outer cloth or Spenser II's compressible material would also cover the reduced diameter region, which would ensure that the outer cloth/compressible material would not disadvantageously

increase the crimp profile. *Id.* (citing Ex. 1008, col. 8, ll. 46–54; Ex. 1003, ¶¶ 309–312). Petitioner again points to Levi's express suggestion of adding other components to the inflow portion of the outer frame. *Id.* at 94–95 (stating that "if additional components are mounted to that portion of the valve, such as an outer skirt 18, the reduced profile of that portion of the valve can help offset or minimize the increase in diameter caused by the additional component").

Patent Owner disputes Petitioner's contention that the cloth-covered outer surface taught by Walther, or Spenser II's compressible material, could be delivered endovascularly. Prelim Resp. 16–19, 20–22. Patent Owner contends that, in either case, a person of skill in the art would have understood that Walther's outer cloth or Spenser's compressible material would bunch up when the valve is crimped, significantly increasing the delivery profile to over 8 mm. *Id.* at 16 (citing Ex. 1002 ¶¶ 48–52).

With specific respect to Walther, Patent Owner notes Petitioner's contention that the common iliac artery "is a larger artery that can accommodate bigger devices," but asserts that Petitioner does not identify the maximum allowable delivery profile for the iliac artery or explain how any of its Walther combinations would fit within that profile. Prelim. Resp. 21 (citing Pet. 39). Patent Owner asserts that Kainuma,[11] cited by Petitioner as teaching delivery *via* the common iliac artery, used a 7.3 mm (22 F) sheath, less than the 8 mm maximum for endovascular transfemoral delivery. *Id.* (citing Pet. 39). Patent Owner points to the testimony of its

[11] S. Kainuma, *Transcatheter Aortic Valve Implantation: First Trans-Iliac Experience in Japan*, 59 GEN. THORACIC CARDIOVASC. SURG. 273–276 (2011) ("Kainuma") Ex. 1043.

declarant, Dr. Buller, who opines that "the delivery of valves through the femoral and common iliac artery is [ ] generally the same." *Id.* (quoting Ex. 2008 ¶ 109). Patent Owner argues that Petitioner does not contend that a valve with a delivery profile larger than 8 mm could be delivered through the common iliac artery, and notes that Kainuma, cited for delivery via the common iliac artery, used a 7.3 mm (22 F)[12] sheath, less than the 8 mm maximum for endovascular transfemoral delivery. *Id.* Patent Owner points to the opinion of its Declarant, Dr. Buller, who states that "the delivery of valves through the femoral and common iliac artery is [] generally the same." *Id.* (quoting Ex. 2008 ¶ 109).

Patent Owner further notes that Petitioner acknowledges that Walther teaches an *in vitro* test using the 33 F (11 mm) Ascendra delivery system, which is designed for transapical, and not endovascular, delivery. Prelim. Resp. 22 (citing Pet. 39; Ex. 1007, 2, 7; also citing Ex. 1017, 1–2). However, argues Patent Owner, Petitioner does not explain how adding Walther's cloth to a different SAPIEN valve would yield a different result, i.e., a valve capable of endovascular delivery, particularly when Walther explains that its cloth-covered valve is suitable for delivery approaches "where tight crimping is not an issue." *Id.* (quoting Ex. 1007, 7; also citing Ex. 2002 ¶ 55).

Furthermore, argues Patent Owner, if a person of ordinary skill in the art were to modify its Walther combinations, Petitioner has not demonstrated that the "outer seal" would meet the other limitations, including that it

---

[12] "F" or "French" is a universal measure of catheter gauge or diameter, such that 1 F = 1/3 mm. *See, e.g.*, 180º Medical, *Figuring Out French Sizes: Urinary Catheter Sizes*, *available at*: https://www.180medical.com/blog/figuring-out-french-sizes/ (last visited March 21, 2022).

"prevent[s] paravalvular leaks" and "is formed of outwardly extending fibers." Prelim. Resp. 25. Patent Owner acknowledges that Petitioner relies upon Walther's original outer cloth for these requirements, but has not shown that these limitations would be met if the outer cloth were further modified so as to reduce its profile. *Id.*

Patent Owner next argues that Petitioner's contention that a skilled artisan "would have had access to many suitable cloths having varying thicknesses and densities" ignores the cloth's function in Walther, and in Spenser II. Prelim Resp. 26. Patent Owner asserts that Walther seals its valve in the annulus by having a thick outer skirt that closes the "gaps between the two valves" so as to conform "the rigid base … to the profile of the expanded stent frame." *Id.* (quoting Ex. 1007, 1). In other words, a certain thickness is necessary and selecting a smaller cloth suitable for endovascular delivery would have frustrated Walther's purpose. *Id.* Patent Owner alleges that Petitioner appears to invite the Board to impermissibly employ hindsight to come up with some *ex post facto* combination that would make the cloth-covered SAPIEN suitable for transfemoral delivery. *Id.* (citing Pet. 40).

Patent Owner argues further that Petitioner states that the '846 patent does not disclose sizing information for its "collagen fibers or the valve's crimped diameter" and therefore "cannot argue that the adaptation of the cloth-covered SAPIEN for endovascular delivery would have been beyond POSITAs' skill." Prelim Resp. 27 (quoting Pet. 41, 69). In response, Patent Owner points to the '846 patent's various Figures (e.g., Figure 8) that Patent Owner contends show a less dense fiber construction than that which is shown in the prior art. *Id.* Patent Owner contends that Petitioner's combinations involve taking references designed for transfemoral delivery

and adding an "outer cloth" to them that would, Patent Owner asserts, render them unsuitable for that purpose. *Id.* at 28.

Finally, Patent Owner argues that Petitioner fails to explain how Levi's supposed "reduced region" 174 would be able to accommodate Walther's far thicker outer cloth. Prelim. Resp. 29. Patent Owner contends that Levi teaches that the inflow end of the calve has a crimped profile of 12 F compared to a 14 F profile at the remainder of the valve. *Id.* at 30 (citing Ex. 1008, col. 8, ll. 56–59). Therefore, Patent Owner contends, this 2 F reduced diameter portion would have only allowed for an outer seal that was 0.33 mm (1 F) thick (when crimped) before the seal would extend radially beyond the non-reduced diameter portion of Levi's frame. *Id.* at 31. Patent Owner observes that this value is less than the 1.0 to 5.0 mm uncrimped seal of Spenser II or the seal depicted in Walther. *Id.* at 31. Patent Owner also notes that Walther's outer skirt is taller than Levi's outer skirt, and the Walther skirt would consequently cover more than the "reduced diameter region" 174 that "generally corresponds to the region of the frame covered by the outer skirt 18." *Id.* at 31–32 (quoting Pet. 94).

With respect to Spenser II, Patent Owner repeats the arguments presented with respect to Walther, contending that, using conservative calculations, the Spenser II combinations would have a delivery profile exceeding the 8.0 mm limit for endovascular delivery even via the common iliac artery. Prelim. Resp. 32. Patent Owner contends that, despite citing the thickness of Spenser's cloth on its own when on a valve in the expanded state, and the diameter of Spenser's crimped valve without an outer cloth, Petitioner does not explain what the delivery profile would be for its proposed combination. *Id.* at 32–33 (citing Pet. 68–69). Patent Owner points out that Spenser's cloth is only 1 mm in the expanded position; in the

crimped position, the 1 mm becomes much thicker and even if bulging is excluded, the combined diameter of Spenser II's cloth with Spenser/Levi would still be too large for endovascular delivery. *Id.* at 33.

Finally, Patent Owner contends that Petitioner has failed to explain why a person of ordinary skill in the art would choose Walther's cloth or Spenser II's compressible material to prevent leakage, when Levi already has an outer skirt for that purpose. Prelim. Resp. 40 (citing Pet. 86–87). Patent Owner argues that, if "Walther's outer cloth," "Spenser II's compressible material" and "Levi's bulging outer skirt" all "yield the predictable results of reducing PVL," and persons of ordinary skill in the art "would have found it obvious to select any one" of these "options," as Petitioner asserts, then a skilled artisan would not be motivated to choose the options that would render the device incapable of transfemoral delivery. *Id.* at 40–41 (citing Ex. 2002 ¶ 74). Patent Owner also asserts that Petitioner contends that Levi "suggests adding other components … to the inflow (proximal) portion of the outer frame," but fails to explain why a skilled artisan would add a component that would add to the delivery profile and prevent transfemoral delivery. *Id.* at 41 (citing Pet. 87).

Based on the present record, we determine that Petitioner has made a persuasive showing that a POSITA would have found it obvious to substitute the woven PET outer skirt taught by Levi with a fibrous material, such as the outer cloth taught by Walther or the compressible material taught by Spenser II, to arrive at a heart valve structure that meets the claimed structural requirements. We further determine that, on the present record, Petitioner has persuasively shown that a person of ordinary skill in the art would have been motivated to deliver such a modified device

endovascularly, either using the transfemoral approach or through the common iliac artery, with a reasonable expectation of success.

We find that the modification to Levi's device proposed by Petitioner would entail the "simple substitution of one known element for another" to obtain predictable results. *See KSR Int'l Co. v. Teleflex Inc.*, 550 U.S. 398, 417 (2007). In this regard, we note that Walther's outer cloth, Spenser II's compressible material, and Levi's outer skirt all serve similar functions of helping reduce paravalvular leakage for a prosthetic heart valve. Ex. 1007, 1; Ex. 1008, col. 14, ll. 7–9; Ex. 1011 ¶ 145. Walther and Spenser II provide an additional motivation to incorporate fibrous cloth materials as the outer layer insofar as they teach that the fibers may encourage blood coagulation and tissue ingrowth to further fill in the gaps and prevent leakage. *Id.*

We have considered, but are not persuaded by Patent Owner's arguments to the contrary at this stage. In particular, we are not persuaded by Patent Owner's arguments that the resultant combination would necessarily be too large to be delivered endovascularly. We note that Levi itself expressly teaches that its device can be delivered percutaneously (i.e., endovascularly) notwithstanding its inclusion of an outer skirt layer with bulging PET fibers, and that this is possible due to the reduced crimped profile of the frame made of a thinner alloy. Ex. 1008, col. 6, ll. 46–49. Levi also recognizes that "an important design parameter of a transcatheter heart valve is the diameter of the folded or crimped profile . . . because this directly influences the physician's ability to advance the transcatheter heart valve through the femoral artery or vein." Ex. 1008, col. 2, ll. 1–5. There is nothing of record to suggest that the outer cloth of Walter or the compressible material of Spenser II would be significantly thicker than

Levi's outer skirt material such that their addition would render Levi's device unsuitable for endovascular delivery.

We specifically note that Levi expressly teaches that:

> The diameter of region **174** is reduced compared to the diameter of the upper portion of the frame (which is not covered by the outer skirt) such that the outer skirt **18** does not increase the overall crimp profile of the valve. …. In one example, the frame of a 26-mm valve, when crimped, had a diameter D of 14 French at the outflow end of the valve and a diameter D of 12 French at the inflow end of the valve.

Ex. 1008, col. 8, ll. 51–59. Nietlispach[13] teaches that femoral arterial diameters of 7 mm and 8 mm can accommodate catheter delivery systems of 22 F and 24 F, respectively (Ex. 1036, 1, 3), which, even allowing for the thickness of the sheath wall, a person of ordinary skill in the art would understand allows considerable leeway for additional catheter diameter to accommodate the outer cloth of Walter or the compressible material of Spenser II.

Additionally, and to the extent that the thickness of the outer layer material could increase the overall diameter and affect the crimped profile of the device, Levi recognizes that other aspects of the devices, including the particular materials selected (such as the use of a thinner metal alloy for the frame), could compensate for such thickness and be among the "design parameters" that a person of ordinary skill in the art would account for to ensure endovascular delivery.

---

[13] F. Nietlispach et al., *Current Balloon-Expandable Transcatheter Heart Valve and Delivery Systems*, 75 CATHETERIZATION AND CARDIOVASCULAR INTERVENTIONS 295–300 (2010) ("Nietlispach") Ex. 1036.

Furthermore, we do not find that a skilled artisan would have been discouraged from the proposed combination in view of Walther's disclosure that its SAPIEN-plus-cloth THV device was implanted using a transapical approach rather than the claimed endovascular delivery approach. To be sure, in response to a question about how much the cloth increases the delivery system size, Dr. Walther responds: "I think it will be an advantage, at least for the trans-apical approach, where tight crimping is not an issue. You need a slightly larger sheath, but you have a valve that could better seal off against irregular aortic calcifications, even primary aortic valve implantations." Ex. 1007, 1126. We do not interpret Dr. Walther's response that the device will be an advantage "at least" for the transapical approach to foreclose the possibility that the SAPIEN-plus-cloth device could be modified, if needed, to allow for endovascular delivery.

In this regard, Spenser II further supports the feasibility of using such a device for endovascular delivery. Notwithstanding its disclosure of an embodiment that includes an outer compressible material that is 1 to 5 mm thick, Spenser II also teaches that percutaneous introduction of medical devices is a preferred approach as it is considered safer and less invasive. Ex. 1011 ¶¶ 11–13, 145. That is, Spenser II does not suggest that its Figure 22 embodiment is capable only of being delivered using a transapical approach. Dr. Brecker's calculation that the incorporation of Spenser II's compressible material would result in an overall diameter that is too large for endovascular delivery is also not persuasive at this stage. Ex. 2002 ¶¶ 48–52. Dr. Brecker appears to assume that the 1–5 mm thickness disclosed for Spenser II's compressible material would be the thickness of the outer layer when the device is in its fully expanded state. But there is no evidentiary support cited for that assumption. It is unclear whether the

thickness range described in Spenser II for the compressible material is for the device in its crimped or expanded state. We will consider this issue further once the record is more fully developed after institution.

We have also considered, but are not persuaded by, Patent Owner's arguments against delivering the modified device endovascularly through the common iliac artery. As an initial matter, claim 6 recites merely that the claimed "valve assembly is delivered endovascularly." Consequently, any endovascular approach, including via the common iliac artery, falls within the scope of the claim.

Furthermore, we note that Petitioner points to the common iliac artery as merely an alternative means for endovascular delivery that was recognized in the art. And although Kainuma recognizes "transfemoral access as the technique of choice because it is less invasive than the transapical approach," it also notes there may be "anatomical constraints" in certain patients for transfemoral delivery. Ex. 1043, 275. Based on the successful implantation of a SAPIEN valve through the common iliac artery, Kainuma concludes that "[t]rans-iliac [implantation] might be less invasive, safe, and the alternative approach for patients with inappropriate anatomical aspects for transfemoral" implantation. *Id.* at 276. As such, on the current record, we find that Petitioner sufficiently shows that a POSITA would have known that any larger diameter device resulting from the combination could potentially be delivered through the common iliac artery for patients with anatomical constraints that would make transfemoral delivery unsuitable.

Finally, we note that many of Patent Owner's arguments focus on the bodily incorporation of Walther's outer cloth or Spenser II's compressible material onto the SAPIEN II device. But that is not the standard for obviousness. *See In re Keller*, 642 F.2d 413, 425 (C.C.P.A. 1981):

> The test for obviousness is not whether the features of a secondary reference may be bodily incorporated into the structure of the primary reference; nor is it that the claimed invention must be expressly suggested in any one or all of the references. Rather, the test is what the combined teachings of the references would have suggested to those of ordinary skill in the art.

In this respect, we are persuaded by Petitioner's contention based on the present record that a "POSITAs would have possessed the necessary skills and equipment to adapt a cloth-covered SAPIEN for transfemoral delivery," and "would have had access to many suitable cloths having varying thicknesses and densities and could have selected an appropriately dimensioned cloth for transfemoral delivery." Pet. 40 (citing Ex. 1003 ¶¶ 75–78, 153). After all, "[a] person of ordinary skill is also a person of ordinary creativity, not an automaton." *KSR*, 550 U.S. at 421.

4. Conclusion for Grounds 6 and 7

For the reasons set forth *supra*, we are persuaded that Petitioner has demonstrated a reasonable likelihood of prevailing with regard to claim 6 on the basis of its Ground 6 (Levi and Walther) and Ground 7 (Levi and Spenser II) challenges.

Accordingly, we institute *inter partes* review of challenged claim 6 of the '172 patent, based on all of the grounds identified in the Petition. *See SAS Inst.*, 138 S. Ct. at 1359–60 (2018); *PGS Geophysical AS v. Iancu*, 891 F.3d 1354, 1360 (Fed. Cir. 2018) (interpreting the statute to require "a simple yes-or-no institution choice respecting a petition, embracing all challenges included in the petition"). We address the remaining grounds of the Petition below in a more abbreviated manner to provide a measure of additional guidance for the parties during trial.

D. Grounds 1–3: (1) Obviousness of claim 6 over Cribier and Walther (Ground 1); Spenser and Walther (Ground 2); and Apenser and Spenser II (Ground 3)

1. Introduction

In Ground 1, Petitioner asserts that claim 6 (incorporating the limitations of independent claim 1) would have been obvious over Cribier and Walther. Pet. 23–32, 39–42. And in Grounds 2 and 3, Petitioner asserts that claim 6 would have been obvious over Spenser combined with either Walther or Spenser II, respectively. Pet. 46–60, 67–69.

2. Overview of Cribier (Ex. 1012)

Cribier is an article published in the journal Herz ["Heart"] in 2009. Ex. 1012, 347. Petitioner argues that Cribier was published in August 2009 and qualifies as prior art under pre-AIA 35 U.S.C. § 102(b). Pet. 22. Patent Owner argues that Petitioner has failed to demonstrate that Cribier is available as prior art. Prelim. Resp. 86–88.

Cribier is directed to a method for implanting the Edwards SAPIEN Transcatheter Heart Valve ("THV"). Ex. 1012, 347. Figure 1 of Cribier is reproduced below:

Fig. 1 of Cribier is a photograph of the Edwards SAPIEN THV.

Cribier teaches that its THV consists of "a tubular slotted stainless-steel balloon-expandable stent with an integrated unidirectional trileaflet bovine tissue valve with a polyethylene terephthalate (PET) fabric cuff." *Id.* at Fig. 1, 348.

Cribier describes implanting the THV "within the diseased native aortic valve using either the retrograde transfemoral or antegrade transapical routes." *Id.* at 347. Specifically, Cribier describes exposing the "anterior wall of the femoral artery," "whereas the posterior wall is not dissected to facilitate sheath insertion. The artery should be palpated and the puncture be made in the healthiest segment of the vessel." *Id.* at 351. Cribier further describes correctly placing the valve so that, before deployment, "one third to half of the stented prosthesis needs to rest above the annulus and the remainder in the [left ventricular outflow tract ('LVOT')] in order to minimize perivalvular leaks and avoid coronary occlusion." *Id.* at 353.

3. Overview of Spenser (Ex. 1010)

Spenser is a U.S. patent that issued on Mar. 31, 2009. Ex. 1010, codes (10), (12), (45). Thus, on its face, Spenser qualifies as prior art under pre-AIA 35 U.S.C. § 102(b).

Spenser is directed to an implantable prosthetic valve for cardiac implantation. Ex. 1010, 1:13–15. Figure 44a of Spenser is reproduced below:

FIG. 44a

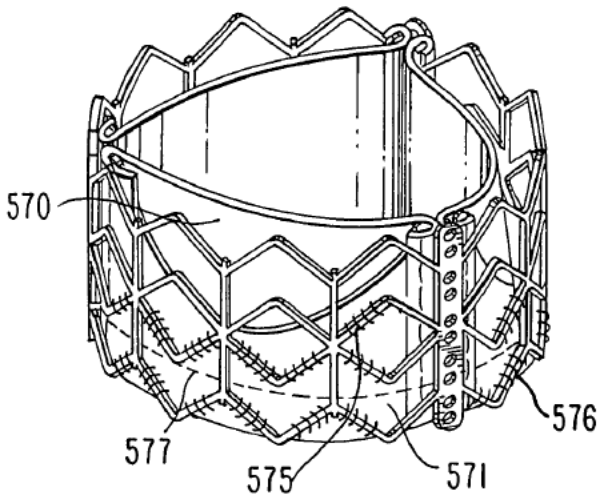

Spenser's Figure 44a illustrates an isometric view of an implantable prosthetic valve with additional pieces of PET used for sealing and protecting the pericardium. *Id.* at 11:32–35. Specifically, Figure 44a illustrates an implantable valve with three pericardial leaflets 570, located within a gridded circular frame 575. *Id.* at 26:30–37.

Figure 44b of Spenser is reproduced below:

FIG. 44b

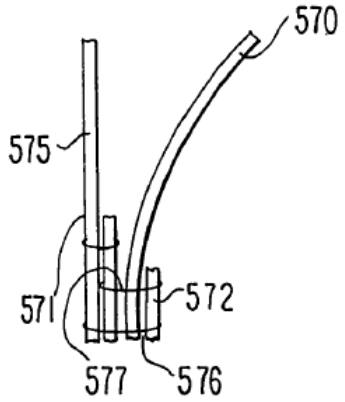

Figure 44b of Spenser depicts a portion of an implantable prosthetic valve

Figure 44b illustrates four layers from left to right, including frame 575, PET layer 571, valve leaflet 570, and PET 572. *See id.* at Fig. 44b, 26:40–42. Spenser discloses that

> PET **571** and **572** are used for connecting pericardial leaflets **570** to frame **575**, while they are assembled in between the leaflets and the frame. A suture **577** connects pericardium leaflet **570** in between two layers of PET, while the inner layer of PET **572** is short and the outer layer is longer. Bottom attachment suture **576**, connects the three layers, the leaflet and both PET layers to the frame and forms a strong sealing line. An upper suture **578** connects the outer PET layer **571** to frame **575**.

Id. at 26:40–48.

4. Prior Art Status of Cribier and Walther

Before we turn to the merits of Petitioner's unpatentability grounds, we address Patent Owner's argument that Petitioner has failed to demonstrate that the Cribier and Walther references were publicly accessible. Prelim. Resp. 86–88. Patent Owner argues that, under Board precedent, "the petition must identify, with particularity, evidence sufficient

to establish a reasonable likelihood that the reference was publicly accessible before the critical date of the challenged patent and therefore that there is a reasonable likelihood that it qualifies as a printed publication." *Id.* at 87 (emphasis omitted) (citing *Hulu, LLC v. Sound View Innovations, LLC*, IPR2018-01039, Paper 29, 13 (PTAB Dec. 20, 2019) (precedential) ("*Hulu*")). Patent Owner contends that "Petitioner provides no librarian declaration or other supporting evidence, and no explanation for its conclusory assertion" that each reference was "published" as of a particular date. *Id.* at 86. Although recognizing that Cribier lists a "2009" date, Patent Owner contends there is nothing in the reference that "mentions Petitioner's asserted 'August 2009' date, much less that this would be a date of publication." *Id.* at 87–88.

Similarly, while recognizing that the first page in Walther sates "[a]vailable online 3 April 2011," Patent Owner argues that "nothing in the document lists the URL of where Walther was allegedly available online, or provides any indication that Walther was available 'to the extent that persons interested and ordinarily skilled in the subject matter or art exercising reasonable diligence, can locate it.'" *Id.* at 88 (citing *SRI Int'l, Inc. v. Internet Sec. Sys., Inc.*, 511 F.3d 1186, 1194 (Fed. Cir. 2008)).

Petitioner replies that the evidence presented in the Petition establishes that Walther and Cribier qualify as prior art. Prelim. Reply 1. With regard to Walther, Petitioner points out that the reference itself bears sufficient indicia of publication, including the fact that it is a medical journal article published in the European Journal of Cardio-thoracic Surgery ("EJCS"), and states on its face that it was available online as of April 3, 2011. *Id.* (citing Ex. 1007, 1120). Additionally, Petitioner notes that "Walther states that it was accepted for publication by the EJCS on February

21, 2011" and that the article's contents were "[p]resented at the 24th annual meeting of the European Association for Cardio-thoracic Surgery, Geneva Switzerland, September 11–15, 2010." *Id.* With regard to Cribier, Petitioner points out that the reference is also a journal article, with a notation that it was published in volume 34 of the journal Herz in 2009. *Id.* at 1–2. Petitioner also submits a declaration by Dr. Sylvia Hall-Ellis (Ex. 1070), who points to additional evidence supporting publication of both references, including Machine-Readable Cataloging ("MARC") records, archived webpages from the "Wayback Machine," a later publication citing to Walther, and a date-stamped copy of Cribier obtained from the British Library. *Id.* at 3 (citing Exs. 1059–1070).

Patent Owner, in its Preliminary Sur-Reply, argues that publication evidence relied upon by Petitioner in its Reply was not "identified, with particularity, ***in the Petition***." Prelim. Sur-Reply 1 (emphasis in original). Patent Owner also argues that Petitioner improperly shifts the burden to Patent Owner. *Id.* at 2.

Based on the present record, we find that Petitioner has satisfied the threshold standard set forth in *Hulu* to identify, with particularity, evidence sufficient to establish a reasonable likelihood that the Walther and Cribier references were publicly accessible before the priority date of the '172 patent. As noted by Petitioner, each of the references are articles published in known journals with dates and other indicia of publication on the face of the references themselves. The *Hulu* decision specifically notes that "the indicia on the face of a reference, such as printed dated and stamps, are considered part of the totality of the evidence" that should be taken into account. *Hulu*, 17–18; *see also id.* at 19 (noting that "the face of Dougherty bears a copyright date of 1990, a printing date of November 1992, and an

ISBN date of 8/94" and the fact that the book was from "an established publisher"). We also take into account that journal articles, unlike, perhaps, other disputed publications, are "the type[s] of document[s] intended for public dissemination," and that the Walther and Cribier references "bear[ ] no designations, such as 'draft' or 'confidential,' that might suggest that [they were] not intended for public distribution." *See Nobel Biocare Servs. AG v. Instradent USA, Inc.*, 903 F.3d 1365, 1377 (Fed. Cir. 2018).

Additionally, we have considered the declaration of Dr. Hall-Ellis and the supporting evidence cited therein as further evidence of public accessibility.[14] We find that it was appropriate for Petitioner to submit this evidence with its Preliminary Reply. Indeed, the *Hulu* case recognizes that a petitioner may provide additional evidence "in a reply to a patent owner preliminary response," and "if the patent owner challenges a reference's status as a printed publication, a petitioner may submit a supporting declaration with its reply to further support its argument that a reference qualifies as a printed publication." *Hulu* at 14–15. Here, we determined that Petitioner satisfied the good cause requirement of 37 C.F.R. § 42.108(c) for submitting its Preliminary Reply with the Hall-Ellis declaration and other supporting evidence in order to respond to Patent Owner's challenges to the printed publication status of Walther and Cribier. *See* Ex. 1071, pp. 13–14, ll. 23–4 (Transcript of teleconference call from February 14, 2022).

Accordingly, in view of the totality of the evidence currently in the record, we find that Petitioner has established a reasonable likelihood that

[14] Contrary to Patent Owner's arguments, we are not of the view that a librarian declaration is always necessary to show public accessibility of a journal article, especially where the article itself bears credible indicia of publication.

both the Walther and Cribier references are printed publications that were publicly accessible before the priority date of the ’172 patent.

5. Analysis of Grounds 1–3: Obviousness over Cribier combined with Walther; Spenser Combined with Walther or Spenser II

Cribier and Spenser are relied upon by Petitioner for similar teachings concerning the basic structure of SAPIEN heart valve assembly, which is alleged to meet the claim requirements for: 1) an outer frame formed from a metallic material that defines a gridded configuration; 2) an inner frame (which constitutes a graft covering) that houses and extends around a prosthetic heart valve, wherein the graft covering is made from a polyester, PTFE, ePTFE, or another polymer material, and 3) the outer frame being secured to the inner frame/graft covering by a plurality of stitches. Also, in the same manner as with the Levi-based obviousness grounds, Walther and Spenser II are relied upon in these grounds for similar teachings concerning an outer cloth layer that is alleged to meet the claim requirement for: 4) a sealing material that includes a plurality of radially extending fibers that extend outwardly of the outer frame. We therefore consider these grounds together.

Petitioner contends that Cribier discloses the SAPIEN heart valve assembly, which includes an outer frame defining a gridded configuration and formed from a metallic material. Pet. 24–25 (citing Ex. 1012, 348, Fig. 1; Ex. 1003 ¶¶ 99–101). Petitioner further contends that Cribier discloses an inner frame in the form of a PET (a polyester polymer) fabric cuff that extends around the prosthetic heart valve on the inside of the outer frame. *Id.* at 26–27 (citing Ex. 1012, 348, Fig. 1; Ex. 1003 ¶¶ 107–108). Petitioner notes that, during prosecution of the ’846 patent, “Patent Owner

argued that an inner graft covering alone satisfies the limitation "an inner frame…wherein the inner frame includes a cylindrically extending inner graft covering." *Id.* at 26. Petitioner also asserts that Cribier teaches that SAPIEN includes an inner "(PET) fabric cuff," which is a graft covering and cylindrically extends radially outwardly of the prosthetic heart valve and radially inwardly of the outer frame. *Id.* at 26–27 (citing Ex. 1012, 348, Fig. 1; Ex. 1003 ¶¶ 107–108).

Petitioner also contends Cribier discloses a plurality of stitches that secure SAPIEN's fabric cuff to the outer frame. *Id.* at 28 (citing Ex. 1012, 348, Fig. 1; Ex. 1003 ¶¶ 111–112). Finally, Petitioner contends that Cribier describes endovascularly delivering SAPIEN, including through the femoral artery using a transfemoral approach. *See id.* at 39 (citing Ex. 1012, 347–356; Ex. 1003 ¶ 149; Ex. 1043; Ex. 1030, 699).

Petitioner contends that Spenser also discloses heart valve assemblies similar to the SAPIEN valve. *Id.* at 46–47 (citing Ex. 1010, Fig. 44a; Ex. 1040, 8). Accordingly, Petitioner contends that Spenser teaches a heart valve assembly that also includes a metallic outer frame. *Id.* at 49 (citing Ex. 1010, col. 12, ll. 28–31). Petitioner further contends that Spenser teaches an additional piece of PET, positioned between valve leaflets and the outer frame. *Id.* at 49–51 (citing Ex. 1010, col. 26, ll. 30–54, Figs. 44a–44c; Ex. 1003 ¶¶ 175–178). Petitioner contends that Spenser teaches a plurality of stitches connecting the PET graft covering to the outer frame. *Id.* at 51 (citing Ex. 1010, col. 26, ll. 45–47, Figs. 44a–44c; Ex. 1003 ¶¶ 179–181). As with Cribier, Petitioner contends that Spenser discloses endovascularly implanting the valve assembly *via* a blood vessel such as the femoral artery. *Id.* at 67–69 (citing Ex. 1010, col. 2, ll. 6–12, cols. 5–6, ll. 17–36, cols. 17–18, ll. 19–43, Figs. 17a–17b; Ex. 1003 ¶¶ 217–223).

Petitioner implicitly acknowledges that neither Cribier nor Spenser teach the claim requirements for a "sealing material" that includes a plurality of radially extending fibers that extend outwardly of the outer frame. Pet. 52. Petitioner therefore turns to the teachings of Walther or Spenser II, in the same manner discussed *supra* in combination with Levi, to assert that the incorporation of such a sealing material would have been obvious. *Id.* at 52–59.

Petitioner argues that a person of ordinary skill in the art "would have been motivated to combine Walther's outer cloth with SAPIEN, as described in Cribier, because Walther expressly discloses this combination." Pet. 31 (citing Ex. 1007, 1120–1121; Ex. 1003 ¶ 126). Specifically, Petitioner argues that Walther teaches that the outer cloth "is designed to reduce paravalvular leak by creating a seal." *Id.* at 29 (citing Ex. 1007, 1120; Ex. 1003 ¶ 114); *see also id.* at 56–57 (citing Ex. 1010, cols. 5–6, ll. 17–36; 1003 ¶¶ 179–182). Petitioner's Declarant points out that Cribier teaches "SAPIEN provides sealing between the outer frame and patient's anatomical wall to 'minimize perivalvular leaks.'" Ex. 1003 ¶ 35 (citing Ex. 1012, 353). Petitioner contends that a skilled artisan "would have been motivated to apply Walther's known technique for reducing [paravalvular leakage] (adding an outer cloth to SAPIEN) to a known device (SAPIEN), which was ready for improvement and . . . would yield predictable results." *Id.* at 35 (citing *KSR Int'l Co. v. Teleflex, Inc.*, 550 U.S. 398, 416 (2007); Ex. 1003 ¶ 136).

Petitioner argues that a person of ordinary skill in the art "would have been motivated to combine Walther's outer cloth with Spenser's Figure 44a because Walther expressly discloses combining an outer cloth with a similar (if not identical) heart valve (SAPIEN). *Id.* at 54 (citing Ex. 1007, 1020-

1021; Ex. 1003, ¶ 186). Similarly, Petitioner contends that a skilled artisan "would have been motivated to combine Spenser II's compressible material with Figure 44a to 'address leaks that can occur around the implanted valve' and 'to encourage coagulation of blood to further fill the gaps and prevent leakage.'" *Id.* at 58–59 (citing Ex. 1011 ¶¶ 10, 145; Ex. 1003 ¶ 196).

Petitioner argues further that Spenser discloses "percutaneous" introduction of medical devices for paravalvular repairs, corresponding to endovascular delivery. Pet. 67 (citing Ex.1010, col. 2, ll. 6–12; Ex. 1003 ¶¶ 217–223). Petitioner further contends that Spenser II discloses a compressible material having a "thickness ranging from about 1 to 5 mm," and Spenser teaches a prosthetic valve that can change its diameter from about 4 mm to about 25 mm. *Id.* at 68 (citing Ex. 1010, col. 27–28, ll. 67–2). Petitioner contends that a "POSITAs would have reasonably expected that adding a compressible material 1 mm thick to Spenser's 4-mm valve would have resulted in a device suitable for endovascular delivery." *Id.* at 68–69 (citing Ex. 1003 ¶ 223).

Patent Owner does not raise any additional arguments with regard to Grounds 1–3 that we have not already considered with regard to Grounds 6 and 7 discussed *supra*. *See* Prelim. Resp. 2–41 (arguing Grounds 1–3 together). We do not find Patent Owner's arguments persuasive for the reasons that we have explained in Section III.C.3 *supra*. We recognize, however, that Petitioner's grounds relying upon Cribier and Spenser are somewhat weaker because neither reference discloses a structure, such as Levi's outer skirt, that a POSITA may consider equivalent to Walther's or Spenser II's outer cloth layers. Nonetheless, even without a motivation based on "simple substitution of one known element for another," *KSR*, 550 U.S. at 417, a person of ordinary skill in the art may have possessed a

sufficient independent motivation to incorporate an outer cloth layer to Cribier's and Spenser's SAPIEN valve structures in view of Walther's and Spenser II's teachings that such a layer could help reduce paravalvular leakage. *See id.* at 420 (holding that "[a] person of ordinary skill is also a person of ordinary creativity, not an automaton"). As we have decided to institute an *inter partes* review in view of our preliminary assessment of Grounds 6 and 7, we will consider these issues more thoroughly and make a final assessment of the merits of Grounds 1–3 (along with the other grounds in the Petition) after a complete trial record has been assembled.

E. Discretionary Denial under 35 U.S.C. § 325(d)

Patent Owner urges us to exercise our discretion under § 325(d) to deny institution because the same or substantially the same prior art or arguments were previously presented to the Office. Prelim. Resp. 68–76. Petitioner takes a contrary position, arguing that the Board should not deny institution under 35 U.S.C. § 325(d). Pet. 108. We address the parties' arguments below.

1. Legal standard

Patent Owner urges us to exercise our discretion to deny institution of trial under 35 U.S.C. §325(d). Prelim. Resp. 68. Under § 325(d), we have discretion to deny a petition that presents the same or substantially the same prior art or arguments as previously presented to the Office. *See* 35 U.S.C. § 325(d). In evaluating whether the factual predicate under § 325(d) is met, we consider a number of non-exclusive factors, as set forth in our decision in *Becton, Dickinson and Co. v. B. Braun Melsungen AG*, IPR2017-01586,

Paper 8 at 17–18 (PTAB Dec. 15, 2017) (precedential) ("the *Becton Dickinson* factors"):

> (a) the similarities and material differences between the asserted art and the prior art involved during examination;
>
> (b) the cumulative nature of the asserted art and the prior art evaluated during examination;
>
> (c) the extent to which the asserted art was evaluated during examination, including whether the prior art was the basis for rejection;
>
> (d) the extent of the overlap between the arguments made during examination and the manner in which Petitioner relies on the prior art or Patent Owner distinguishes the prior art;
>
> (e) whether Petitioner has pointed out sufficiently how the Examiner erred in its evaluation of the asserted prior art; and
>
> (f) the extent to which additional evidence and facts presented in the Petition warrant reconsideration of the prior art or arguments.

Becton, Dickinson, IPR2017-01586, Paper 8 at 17–18.

In performing an analysis under § 325(d):

> [T]he Board uses the following two-part framework: (1) whether the same or substantially the same art previously was presented to the Office or whether the same or substantially the same arguments previously were presented to the Office; and (2) if either condition of first part of the framework is satisfied, whether the petitioner has demonstrated that the Office erred in a manner material to the patentability of challenged claims.… If, after review of [*Becton, Dickinson*] factors (a), (b), and (d), it is determined that the same or substantially the same art or arguments previously were presented to the Office, then factors

> (c), (e), and (f) relate to whether the petitioner has demonstrated a material error by the Office.

Advanced Bionics, LLC v. MED-EL Elektromedizinische Geräte GmbH, IPR2019-01469, Paper 6 at 8 (PTAB Feb. 13, 2020) (precedential). Consequently, we first turn to an analysis of *Becton-Dickinson* factors (a), (b), and (d) to determine whether the same or substantially the same art previously was presented to the Office or whether the same or substantially the same arguments previously were presented to the Office.

2. Part One of the *Advanced Bionics* Analysis

Becton Dickinson factors (a), (b), and (d) require us to determine, respectively: (a) "the similarities and material differences between the asserted art and the prior art involved during examination;" (b) "the cumulative nature of the asserted art and the prior art evaluated during examination," and (d) "the extent of the overlap between the arguments made during examination and the manner in which Petitioner relies on the prior art or Patent Owner distinguishes the prior art." *Becton, Dickinson*, IPR2017-01586, Paper 8 at 17.

According to Petitioner, Walther, Cribier, and Spenser were not before the Examiner during prosecution of the '253 application, although Petitioner acknowledges that Spenser's parent's publication, Pub. No. US Ser. No. 2003/0153974 A1, was listed on an Information Disclosure Statement (IDS).[15] Pet. 108. Petitioner argues that both Spenser II, Cribier

[15] However, Petitioner points out that this publication does not disclose Spenser's Figure 44a, which is similar or identical to the SAPIEN valve.

'321's[16] parent publication, WO 98/29057 (the "'057 publication"), and Levi's parent publication, US Ser. No. 2012/0123529 (the "'529 publication") were before the Examiner during prosecution. *Id.* at 109–110.

Patent Owner argues that Levi and Spenser II were before, and were carefully considered, by the Examiner. Prelim Resp. 68. Patent Owner acknowledges that Spenser, Walther, and Cribier were not specifically before the Examiners, but argues that the portions of those references relied upon by Petitioner are "substantially similar" to the considered portions of Levi and Spenser II. *Id.* at 68–69.

We agree with Patent Owner that at least some portions of the Cribier, Walther, and Spenser references are substantially similar to the Levi and Spenser II references considered by the Examiner, insofar as each of these references disclose the basic structure of the Edwards SAPIEN valve. We also agree that Walther discloses the use of an outer cloth over the SAPIEN valve to reduce paravalvular leaks in a manner that is substantially similar to Spenser II's disclosures regarding the Figure 22 embodiment that includes a layer of compressible material. As such, we find that the prior art relied upon in the Petition is the same or substantially the same as the prior art that was before the Examiner.

Nevertheless, insofar as the sole challenged claim 6 of the '846 patent specifically require the heart valve to be delivered "endovascularly," we are not persuaded that the Examiner fully considered the prior art teachings and arguments presented in the Petition as to why the prior art valves disclosed in these references are sized or could otherwise be modified, if needed, to

[16] Cribier et al. (US 7,585,321 B2, September 8, 2009) ("Cribier '321") Ex. 1045.

satisfy that particular requirement. *See* Pet. 39–42, 67–69, 92–93. We address the Examiner's consideration of the prior art under the second part of the *Advanced Bionics* framework.

3. Part Two of the *Advanced Bionics* Analysis

In view of our determination that at least some of the prior art relied upon in the Petition is the same or substantially the same as what was previously presented to the Office, we turn to the second part of the *Advanced Bionics* framework, which requires an assessment of whether Petitioner has demonstrated that the Office erred in a manner material to the patentability of challenged claims.

Petitioner contends that Levi anticipates or renders obvious the challenged claims, and therefore the Examiner erred in allowing the challenged claims over Levi. Pet. 109–110. Likewise, Petitioner contends that a "POSITAs would have found it obvious to combine Spenser II with Spenser or Levi, which disclose an inner graft covering. Patent Owner never addressed these combinations." *Id.* at 110. Petitioner relies on statements made by the Patent Owner during prosecution of the '253 application that it qualifies as "incorrect," "irrelevant," "attorney argument," and "unfounded" and further argues that Patent Owner never addressed certain combinations of the references. *Id.* at 109–110. Based upon these statements and alleged omissions, Petitioner urges us to deny exercise of our discretion to deny institution. *Id.* at 111.

Patent Owner contends that Petitioner fails to show how the Office erred in allowing the challenged claims over Levi and Spenser II, as the references were brought to the Examiners' attention through the Intentus Report which quotes the most pertinent aspects of Levi. Prelim. Resp. 70.

Patent Owner argues that the "Intentus Report" (Ex. 2018) describes the results of "an invalidity report prepared by a prior art search firm" which was considered by the Examiner. *Id.* (citing Ex. 2030, 267–279; Ex. 2034 229–230; Ex. 2018 4). Patent Owner argues that the Intentus Report quotes Levi at length, and specifically refers to the same portions relied on in Petitioner's Grounds. *See id.* at 64–66.

Likewise, Patent Owner argues that Spenser II was expressly distinguished by applicant in the remarks accompanying the Preliminary Amendment during prosecution. *Id.* at 69 (citing Ex. 1002, 133–134, 136–139, 144–145, 147–149). In the Preliminary Amendment remarks, the applicant argued that Spenser II (WO2006/005015) "may have problems associated with crimp profile" and "appears to include an outer graft covering between the fibers and the outer frame, which is a claimed negative limitation." Ex. 1002, 147.

Having considered the arguments of record, we find that the Examiner materially erred during prosecution by failing to fully consider the prior art teachings regarding the claim requirement for a "sealing material positioned externally to the outer frame for providing a sealing between the outer frame and a patient's anatomical wall to prevent paravalvular leaks, wherein the sealing material includes a plurality of radially extending fibers that extend outwardly of the outer frame." Indeed, the Examiner did not issue *any* rejections during prosecution despite prior art teachings that are closely related to the subject matter and claims of the '846 patent. *See, e.g.*, Ex. 1011 ¶ 145, Fig. 22 (Spenser II's Figure 22 embodiment showing an outer layer of compressible material made of fabric or cloth that can reduce paravalvular leakage).

In the Notice of Allowance, the Examiner noted that the prior art of record did not teach:

> [W]herein the inner frame includes a cylindrically extending inner graft covering extending at least partially radially outwardly of the prosthetic heart valve and radially inwardly of the outer frame for providing sealing to the prosthetic heart valve, wherein the outer frame is secured to the inner graft covering by stitching at a proximal end of the outer frame; wherein the outer seal is free of an outer graft covering between the fibers and the outer frame.

Ex. 1002, 20. However, Patent Owner appears also to now acknowledge that the compressible material taught by Spenser II meets the requirements for a sealing material, distinguishing Spenser II only on the basis that it may have problems associated with crimp profile, and included an outer graft covering between the fibers and the outer frame. Importantly, we also find that the Examiner erred by failing to fully consider whether the prior art taught or suggested the requirement that the valves be delivered endovascularly as recited in challenged claim 6. *See, e.g.*, Ex. 1008, col. 2, ll. 1–5 (Levi discussing that the diameter of the crimped profile of the heart valve is an important design parameter to allow for transfemoral delivery).

In view of this material error by the Examiner, we decline to deny institution under 35 U.S.C. § 325(d).

IV. CONCLUSION

For the forgoing reasons, Petitioner has demonstrated a reasonable likelihood that at least one challenged claim of the ’846 patent would have been obvious over the prior art of record. Accordingly, we institute *inter partes* review of all claims and all grounds set forth in the Petition.

V. ORDER

In consideration of the foregoing, it is hereby:

ORDERED that, pursuant to 35 U.S.C. § 314, *inter partes* review is instituted on all extant claims and all extant grounds set forth in the Petition; and

FURTHER ORDERED that, pursuant to 35 U.S.C. § 314(c) and 37 C.F.R. § 42.4, *inter partes* review of the '846 patent shall commence on the entry date of this Order, and notice is hereby given of the institution of a trial.

For PETITIONER:

Craig Summers
Joshua Stowell
Brian Barnes
KNOBBE, MARTENS, OLSON & BEAR LLP
2css@knobbe.com
2jys@knobbe.com
brian.barnes@knobbe.com

For PATENT OWNER:

Kenneth Weatherwax
Patrick Maloney
Vinson Lin
Nathan Lowenstein
LOWENSTEIN & WEATHERWAX LLP
weatherwax@lowensteinweatherwax.com
maloney@lowensteinweatherwax.com
lin@lowensteinweatherwax.com
lowenstein@lowensteinweatherwax.com