Trials@uspto.gov
Tel: 571-272-7822

Paper 50
Date: March 24, 2023

UNITED STATES PATENT AND TRADEMARK OFFICE

BEFORE THE PATENT TRIAL AND APPEAL BOARD

EDWARDS LIFESCIENCES CORPORATION AND
EDWARDS LIFESCIENCES LLC,
Petitioners,

v.

AORTIC INNOVATIONS, LLC,
Patent Owner.

IPR2022-00034
Patent 10,966,846 B2

Before JOHN G. NEW, JASON W. MELVIN, and RYAN H. FLAX,
Administrative Patent Judges.

NEW, *Administrative Patent Judge*

JUDGMENT
Final Written Decision
Determining the Challenged Claim Not Unpatentable
35 U.S.C. § 318(a)

I. INTRODUCTION

We have jurisdiction to hear this *inter partes* review under 35 U.S.C. § 6, and this Final Written Decision is issued pursuant to 35 U.S.C. § 318(a) and 37 C.F.R. § 42.73. For the reasons set forth below, we determine that Petitioners Edwards Lifesciences Corporation and Edwards Lifesciences LLC (collectively "Petitioner") have failed to establish by a preponderance of the evidence that challenged claim 6 of Patent Owner Aortic Innovations, LLC ("Patent Owner") U.S. Patent No. 10,857,011 B2 (Ex. 1001, "'846 patent") is unpatentable.

A. Procedural History

On October 11, 2021, Petitioner filed its Petition (Paper 2, "Petition" or "Pet.") seeking *inter partes* review of claims 1–12 of the '846 patent. Patent Owner timely filed a Preliminary Response. (Paper 6 "Prelim. Response"). Together with its Preliminary Response, Patent Owner filed a Statutory Disclaimer of claims 1–5 and 7–12 of the '846 patent (leaving only claim 6, which depends directly from independent claim 1, remaining as challenged in this proceeding). Prelim. Resp. 1, n.1, 80–81; *see also* Ex. 2011. With our authorization, Petitioner filed a Preliminary Reply and Patent Owner filed a Preliminary Sur-Reply. Paper 9 ("Prelim. Reply"); Paper 11 ("Prelim. Sur-Reply"). On April 1, 2021, and pursuant to 35 U.S.C. § 314, we instituted *inter partes* review of challenged claim 6 of the '846 patent (Paper 14, "Institution Decision" or "Dec.").

After institution of trial, Patent Owner filed a Response (Paper 24, "PO Resp."), to which Petitioner filed a Reply (Paper 28, "Pet. Reply"), and Patent Owner, in turn, filed a Sur-Reply (Paper 36, "PO Sur-Reply"). With our authorization, Petitioner subsequently filed a Sur-Sur-Reply (Paper 39, "Pet. Sur-Sur-Reply").

Oral argument was held on December 15, 2022. A transcript of the oral argument is included in the record. (Paper 48, "Hearing Trans.").[1]

B. Related Proceedings

Petitioner identifies as related matters *Edwards Lifesciences Corp. v. Aortic Innovations LLC*, PR2021-01527, challenging claims of US 10,792,172 B2 (the "'172 patent") and *Edwards Lifesciences Corp. v. Aortic Innovations, LLC*, IPR2021-01584, challenging claims of US 10,857,011 (the "'011 patent"). Pet. 111. The '846 patent is a continuation of the '172 and '011 patents. *Id.* We note that an additional *inter partes* review proceeding concerning a related patent filed by Petitioner that was conducted in parallel with this *inter partes* review, *Edwards Lifesciences Corp. v. Aortic Innovations LLC*, IPR2022-00193 (concerning US

[1] Oral argument was simultaneously heard in this *inter partes* review and in *Edwards Lifesciences Corporation and Edwards Lifesciences LLC v. Aortic Innovations, LLC*, IPR2021-01584, IPR2022-00034 and IPR2022-00193, all of which were conducted in parallel, but not consolidated, with the present proceeding.

10,881,538). We also note that an additional *inter partes* review of a related patent has been instituted in *Edwards Lifesciences Corp. v. Aortic Innovations LLC*, IPR2022-00556 (concerning US 10,987,236). Petitioner and Patent Owner identify *Aortic Innovations LLC v. Edwards Lifesciences Corp.*, No. 1-21-CV-01377 (D. Del., Sept. 28, 2021), where Patent Owner asserts, *inter alia*, the '846 patent against Petitioner, as an additional related matter. *Id.* at 112; *see also* Ex. 1050 (complaint).

C. Real Parties-in-Interest

Petitioner identifies Edwards Lifesciences Corp. and Edwards Lifesciences LLC, as the real parties-in-interest. Pet. 111. Patent Owner identifies Aortic Innovations, LLC as the real party-in-interest. Paper 4, 1. There is no dispute over the real parties-in-interest in this proceeding

D. The Instituted Grounds of Unpatentability

Petitioner contends that challenged claim 6 of the '846 patent is unpatentable, based upon the following grounds, all of which have been instituted in this proceeding:

Ground[2]	Claim(s) Challenged	35 U.S.C. §	Reference(s)/Basis
I	6	103[3]	Cribier[4], Walther[5]
II	6	103	Spenser[6], Walther
III	6	103	Spenser, Spenser II[7]
IV	6	102(e)	Levi[8]
V	6	103	Levi

[2] Grounds VIII, IX, and X of the Petition were directed only to claim 10, which was disclaimed by Patent Owner. *See* Ex. 2011. Consequently, these Grounds were not included as a basis for institution of this *inter partes* review.

[3] The Leahy-Smith America Invents Act, Pub. L. No. 112-29, 125 Stat. 284 (2011) ("AIA"), amended 35 U.S.C. §§ 102 and 103. Because the challenged claims of the '846 patent have an effective filing date before the effective date of the applicable AIA amendments, we refer to the pre-AIA versions of 35 U.S.C. §§ 102 and 103 throughout this Decision.

[4] A. Cribier et al., Technique of Transcatheter Aortic Valve Implantation with the Edwards-Sapien® Heart Valve Using the Transfemoral Approach, 34(5) HERZ 347–56 (2009) ("Cribier") Ex. 1012.

[5] T. Walther et al., Trans-catheter valve-in-valve implantation: in vitro hydrodynamic performance of the SAPIEN + cloth trans-catheter heart valve in the Carpentier-Edwards Perimount valves, 40 EUR. J. CARDIO-THORACIC SURGERY 1120–26 (2011) ("Walther") Ex. 1007.

[6] Spenser et al. (US 7,510,575 B2, March 31, 2009) ("Spenser") Ex. 1010.

[7] Spenser et al. (WO 2006/005015 A2, January 12, 2006) ("Spenser II") Ex. 1028.

[8] Levi et al. (US 9,393,110 B2, July 19, 2016) ("Levi") Ex. 1008.

Ground[2]	Claim(s) Challenged	35 U.S.C. §	Reference(s)/Basis
VI	6	103	Levi, Walther
VII	6	103	Levi, Spenser II

Petitioner relies on the Declaration of Nigel Buller, M.D. (Ex. 1003). Patent Owner relies on the Declarations of Stephen J.D. Brecker, M.D. (Ex. 2002; Ex. 2051). We have reviewed the credentials of Petitioners' declarant, Dr. Buller, and Patent Owner's declarant, Dr. Brecker, and consider both to be qualified to provide the opinions for which their testimony has been submitted.

E. The '846 patent

The '846 patent is entitled "Device for Endovascular Aortic Repair." Ex. 1001, code (54). The '846 patent issued from Appl. Ser. No. 16/096,253, which claims priority through a series of continuation and divisional applications to Appl. No. 13/706,896, filed on December 6, 2012. *Id.* at codes (21), (60). The '846 patent also claims priority to Provisional

Appl. No. 61/723,446, filed on November 7, 2012, and Provisional Appl. No. 61/567,458, filed on December 6, 2011. *Id.* at code (60).[9]

The '846 patent discloses an endograft device, including a transcatheter heart valve, used for endovascular repair of ascending aortic aneurysms. Ex. 1001, col. 2, ll. 51–52. Specifically, the Specification discloses that "[t]he endograft device also includes a valve element that is secured to the balloon-expandable frame at the proximal end of the second prosthetic component." *Id.* at col. 2, ll. 65–67. According to the Specification, none of the devices in clinical use for endovascular repair of ascending aortic aneurysms "have been designed with the purpose of endovascular repair of multiple types of ascending aortic aneurysms." *Id.* at col. 2, ll. 35–37.

The Specification describes a need for a device

> that can treat different anatomical variations of ascending aortic aneurysms, create effective proximal and distal seal zones within the aorta, and have a durable valve component, but that also

---

[9] According to Petitioner, "[d]uring prosecution, Patent Owner stated that the application's 'effective filing date . . . is believed to be based on Provisional Patent Application No. 61/723,446, filed on November 7, 2012.'" Pet. 20 (quoting Ex. 1002, 274). Petitioner asserts that "the '846 patent is not entitled to a priority date of December 6, 2011 because the '458 provisional does not adequately support or enable the '846 patent's claims." *Id.* at 21. Because all the asserted references bear a publication or filing date that antedates the earlier priority date of the '458 provisional, we need not address whether the '846 patent claims are entitled to claim priority to the '458 provisional.

> allows for future valve re-interventions. A device is also needed that would allow for treatment of different coronary anatomical variations among the patient population, allow future coronary re-intervention, but that also avoids coronary compression, and enables treatment of possible paravalvular leaks.

Id. at col. 2, ll. 37–46.

Figure 11 of the ’846 patent is reproduced below:

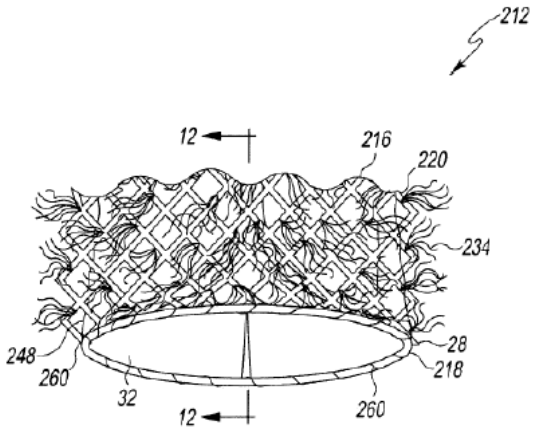

Fig. 11

<u>Figure 11 of the ’846 patent is a perspective view of a proximal end of a prosthetic component 212</u>

Component 212 includes a dual-frame structure with a circular inner frame 218 secured to circular outer frame 216 *via* a plurality of stitches 260. *Id.* at Fig. 11, col. 14, ll. 6–9.

Figure 13 of the ’846 patent depicts a different view of the relevant portion of the invention and is reproduced below.

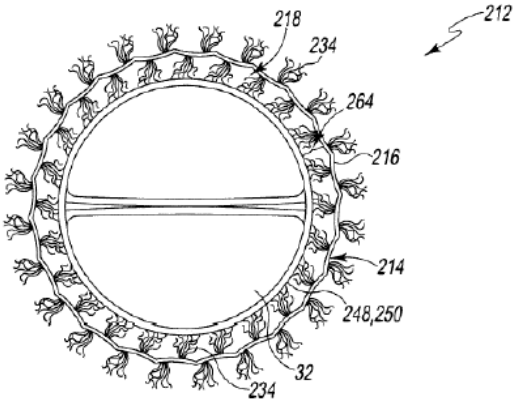

Fig. 13

Figure 13 of the '846 patent depicts a plan view of the prosthetic device 212

As illustrated in Figure 13, the device with circular dual frame component 214 includes an outer frame 216 secured to a balloon-expandable inner frame 218. *Id.* at Fig. 13, col. 14, ll. 6–8.

As also shown in Figures 11 and 13, the inner frame 218 houses the prosthetic valve 32. Ex. 1001, Fig. 13, col. 13, ll. 42. Collagen fibers 234 extend outwardly and inwardly from outer frame 216. *See id.* at Fig. 13, col. 12, ll. 43, 46–48. Outer frame 216 is a grid with diagonally oriented members as compared to those at the proximal end of the device. *See* Fig. 11. Figures 11 and 13 further illustrate fibers 234 extending outwardly from proximal section 220 and inwardly into the passageway formed by the stent. *Id.* at Figs. 11, 13, col. 14, ll. 30–33. According to the Specification, these collagen fibers 234 "aid in preventing paravalvular leaks and migration of the proximal component 212 within the aortic walls." *Id.* at col. 12, ll. 44–45.

The Specification further describes "[b]alloon-expandable frame 218 … as a balloon-expandable tubular stent 244." Ex. 1001, col. 13, ll. 41–43. "[S]tent 244 is tubular and is constructed of a metallic material, such as, nitinol, stainless steel, or other implant grade metallic material, in an open-cell configuration." *Id.* at col. 13, ll. 46–48. "When the inner frame 218 is unexpanded, the outer surface 248 of the stent 244 is spaced apart from the fibers 234 attached to the outer frame 216." *Id.* at Fig. 13, col. 14, ll. 13–16 When inner frame 218 is expanded, outer surface 248 of stent 244 engages fibers 234 through covering material 250, thereby closing gap 264 so that fibers 234 and covering material 250 create a seal between inner frame 218 and outer frame 216. *Id.* at Fig. 13, col. 14, ll. 19–32.

F. Representative Claim

Claim 6 is the sole challenged claim in this *inter partes* review. Claim 6 depends from disclaimed independent claim 1 and therefore incorporates all of the limitations of claim 1. *See Monsanto Co. v. Syngenta Seeds, Inc.*, 503 F.3d 1352, 1357 (Fed. Cir. 2007) ("A claim in dependent form shall be construed to incorporate by reference all the limitations of the claim to which it refers" (quoting 35 U.S.C § 112, ¶ 4 (2000)). Disclaimed independent claim 1 recites:

> 1. A valve assembly comprising:
>
> an outer frame, wherein the outer frame is formed from a metallic material and defines an open cell configuration;
>
> an inner frame that engages a prosthetic heart valve having prosthetic leaflets, wherein the inner frame includes a

> cylindrically extending inner graft covering extending at least partially radially outwardly of the prosthetic heart valve and radially inwardly of the outer frame for providing sealing to the prosthetic heart valve,
>
> wherein the outer frame is secured to the inner graft covering by stitching at a proximal end of the outer frame;
>
> an outer seal for preventing paravalvular leaks that begins at a proximal portion of the outer frame and extends over at least two rows of cells formed in the outer frame,
>
> wherein the outer seal is attached to the outer frame,
>
> wherein the outer seal is formed of outwardly extending fibers positioned externally to the outer frame,
>
> wherein the outer seal is free of an outer graft covering between the fibers and the outer frame,
>
> wherein the valve assembly has a radially compressed orientation and a radially expanded orientation,
>
> wherein the valve assembly is balloon expandable and expansion of the valve assembly is configured to press some of the fibers against native leaflets of the aorta of the patient.

Ex. 1001 cols. 21–22, ll. 15–6. Challenged dependent claim 6 recites:

> 6. The valve assembly of claim 1, wherein the valve assembly is delivered endovascularly.

Ex. 1001, col. 22, ll. 12–44.

II. ANALYSIS

A. Level of Ordinary Skill in the Art

Petitioner contends that a person of ordinary skill in the art in November 2012 would have been an interventional cardiologist with a working knowledge of heart valve designs and endovascular prostheses.

Pet. 23. Petitioner asserts that such a skilled artisan would, where necessary, work with a medical device engineer to experiment with or manufacture a prosthetic heart valve. *Id.* (citing Ex. 1003 ¶ 45).

Patent Owner does not expressly challenge Petitioner's definition. We consequently adopt Petitioner's definition of a person of ordinary skill in the art as an interventional cardiologist with a working knowledge of heart valve designs and endovascular prostheses, that would, where necessary, work with a medical device engineer to experiment with or manufacture a prosthetic heart valve. We also find that Petitioner's definition is commensurate with the level of skill reflected in the prior art. *See, e.g.*, Exs. 1006, 1010, 1030, 1033; *see also Okajima v. Bourdeau*, 261 F.3d 1350, 1355 (Fed. Cir. 2001).

B. Claim construction

The Board applies the same claim construction standard that would be used to construe the claim in a civil action under 35 U.S.C. § 282(b). *See* 37 C.F.R. § 100(b) (2020). Under that standard, claim terms "are generally given their ordinary and customary meaning" as understood by a person of ordinary skill in the art at the time of the invention. *Phillips v. AWH Corp.*, 415 F.3d 1303, 1312–13 (Fed. Cir. 2005) (en banc). "In determining the meaning of the disputed claim limitation, we look principally to the intrinsic evidence of record, examining the claim language itself, the written description, and the prosecution history, if in evidence." *DePuy Spine, Inc. v. Medtronic Sofamor Danek, Inc.*, 469 F.3d 1005, 1014 (Fed. Cir. 2006)

(citing *Phillips*, 415 F.3d at 1312–17). Extrinsic evidence is "less significant than the intrinsic record in determining 'the legally operative meaning of claim language.'" *Phillips*, 415 F.3d at 1317 (quoting *C.R. Bard, Inc. v. U.S. Surgical Corp.*, 388 F.3d 858, 862 (Fed. Cir. 2004)).

Petitioner argues that no claim terms require additional construction beyond the *Phillips* standard enunciated above. Pet. 23 (citing 37 C.F.R. § 42.100(b); *Phillips*, 415 F.3d 1312–13). Patent Owner does not dispute Petitioner's assertion and we consequently apply the claim terms according to their plain and ordinary meaning without express construction. If any claim language requires interpretation to analyze patentability based on the parties' positions and evidence we discuss such interpretation in our patentability analysis below.

C. Patentability: Principles of Law

To prevail in its challenges to the patentability of claim 6 of the '846 patent, Petitioner must demonstrate by a preponderance of the evidence that the claim is unpatentable. 35 U.S.C. § 316(e); 37 C.F.R. § 42.1(d) (2019). "In an [*inter partes* review], the petitioner has the burden from the onset to show with particularity why the patent it challenges is unpatentable." *Harmonic Inc. v. Avid. Tech., Inc.*, 815 F.3d 1356, 1363 (Fed. Cir. 2016); *see also* 35 U.S.C. § 312(a)(3) (2012) (requiring inter partes review petitions to identify "with particularity . . . the evidence that supports the grounds for the challenge to each claim"). That burden of persuasion never shifts to Patent Owner. *Dynamic Drinkware, LLC v. Nat'l Graphics, Inc.*, 800 F.3d

1375, 1378 (Fed. Cir. 2015); *see also In re Magnum Oil Tools Int'l, Ltd.*, 829 F.3d 1364, 1375–78 (Fed. Cir. 2016) (discussing the burden of proof in *inter partes* review).

"A claim is anticipated only if each and every element as set forth in the claim is found, either expressly or inherently described, in a single prior art reference." *Schering Corp. v. Geneva Pharms*, 339 F.3d 1373 (Fed. Cir. 2003) (quoting *Verdegaal Bros., Inc. v. Union Oil Co. of Cal.*, 814 F.2d 628, 631 (Fed. Cir. 1987)). It is well settled that "a reference can anticipate a claim even if it 'd[oes] not expressly spell out' all the limitations arranged or combined as in the claim, if a person of skill in the art, reading the reference, would 'at once envisage' the claimed arrangement or combination." *Kennametal, Inc. v. Ingersoll Cutting Tool Co.*, 780 F.3d 1376, 1381 (Fed. Cir. 2015) (quoting *In re Petering*, 301 F.2d 676, 681 (1962)).

A claim is unpatentable under 35 U.S.C. § 103 as being obvious if the differences between the claimed subject matter and the prior art are such that the subject matter, as a whole, would have been obvious at the time the invention was made to a person having ordinary skill in the art to which said subject matter pertains. *See KSR Int'l Co. v. Teleflex Inc.*, 550 U.S. 398, 406 (2007). The question of obviousness is resolved on the basis of underlying factual determinations, including (1) the scope and content of the prior art; (2) any differences between the claimed subject matter and the prior art; (3) the level of skill in the art; and (4) where in evidence, so-called secondary considerations. *See Graham v. John Deere Co.*, 383 U.S. 1, 17–18 (1966). We also recognize that prior art references must be "considered

together with the knowledge of one of ordinary skill in the pertinent art." *In re Paulsen*, 30 F.3d 1475, 1480 (Fed. Cir. 1994) (citing *In re Samour*, 571 F.2d 559, 562 (C.C.P.A. 1978)).

D. Grounds I–VII: "wherein the outer seal is free of an outer graft covering between the fibers and the outer frame"

Claim 6, *via* the recitations of independent claim 1, is explicit that "the outer seal is free of an outer graft covering between the fibers and the outer frame." Petitioner argues that Spenser II, Walther, or Levi teaches this limitation of claim 1, as incorporated into challenged claim 6. *See* Pet. 30, 53–54, 58, 85. Because we find this issue to be dispositive of this *inter partes* review, we focus our analysis upon this limitation.

1. Overview of Spenser II (Ex. 1011)

Spenser II is a PCT Publication that published on Jan. 12, 2006. Ex. 1011, codes (10), (43). On its face, therefore, Spenser II qualifies as prior art under pre-AIA 35 U.S.C. § 102(b).

Spenser II is directed to "the prevention, detection, and repair of paravalvular leaks around cardiac valve prostheses." Ex. 1011 ¶ 1. Spenser II teaches that prosthetic valves may be implanted "either through open heart surgery or by use of newer percutaneous methods," but with both methods paravalvular leaks are a known side effect." *Id.* ¶ 11. Spenser II further notes that "[p]ercutaneous introduction of medical devices is a preferred surgical procedure" and "considered safer and less invasive." *Id.*

¶ 12.

Figure 22 of Spenser II is reproduced below:

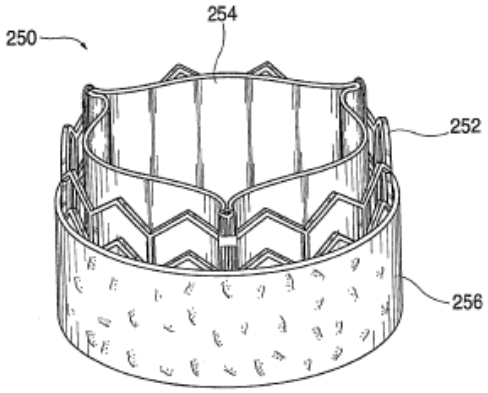

FIG. 22

Spenser II's Figure 22 shows an embodiment including a layer of compressible material, such as a cloth material, along an exterior surface of a stented valve. Ex. 1011 ¶ 85. Specifically, Figure 22 illustrates stented valve 250 including a circular stent structure 252 surrounding a valvular structure 254. *Id.* at Fig. 22, ¶ 144. "[S]tent structure 252 is preferably made of a deformable material, such as stainless steel, adapted for radial expansion using a balloon catheter. The valvular structure 254 forms three leaflets and is illustrated in the open configuration." *Id.* at ¶ 144. The device further includes circular layer of compressible material 256 surrounding the outside of stent structure 252. *Id.* at Fig. 22, ¶ 145. "The material may extend partially around the stent structure or may extend entirely around the stent structure, such as in the form of a sleeve," and may be formed of PET. *Id.* "[T]he compressible material 256 may resemble a cloth or fabric having small fibers extending from the surface of the material." *Id.* This "compressible material expands after deployment at a

treatment site" and "fills the gaps between the stented valve and the surrounding tissue," which "creates a mechanical seal that prevents paravalvular leakage." *Id.* "In one preferred embodiment, the compressible material is formed of polyethylene terephthalate (PET) and has a thickness ranging from about 1 to 5 mm." *Id.*

2. Overview of Walther (Ex. 1007)

Walther is an article published in the European Journal of Cardio-thoracic Surgery, with a copyright date of 2011. Ex. 1007, 1120. Petitioner contends that Walther was published online on April 3, 2011, and qualifies as prior art under pre-AIA 35 U.S.C. § 102(b). Pet. 22. Patent Owner argues that Petitioner has failed to demonstrate that Walther is available as prior art. Prelim. Resp. 86–88.[10]

Walther is directed to a method of deploying a trans-catheter valve in a previously implanted degenerative bioprosthetic valve. Ex. 1007, 1120. Specifically, Walther describes implanting an Edwards SAPIEN transcatheter heart valve ("THV") cloth valve, "which is identical to the SAPIEN model, but has an added outer cloth for implantation into a degenerative bovine pericardium, Carpentier-Edwards Perimount (CEP) bioprosthetic valve." *Id.* Walther discloses that:

---

[10] For purposes of this Decision, we need not resolve whether Walther qualifies as prior art because, for the reasons explained below, Walther does not disclose the dispositive limitation identified above.

> The CEP surgical valves are made with a base that is more rigid than other valves. When a SAPIEN™ valve is expanded in the CEP valve, the rigid base does not easily conform to the profile of the expanded stent frame, which leaves gaps between the two valves, resulting in higher paravalvular leak. The addition of an outer cloth to the SAPIEN™ cloth valve is designed to reduce paravalvular leak by creating a seal between the two valves and improve resistance to migration with better 'fit' within surgical Perimount valves.

Id. Additionally, Walther discloses that the outer cloth "reduce[s] paravalvular leak," "increase[s] 'fit' within EW Perimount valves [a benchtop valve]," and "promote[s] tissue ingrowth, which further decreases paravalvular leakage." *Id.*

Figure 1 of Walther is reproduced below:

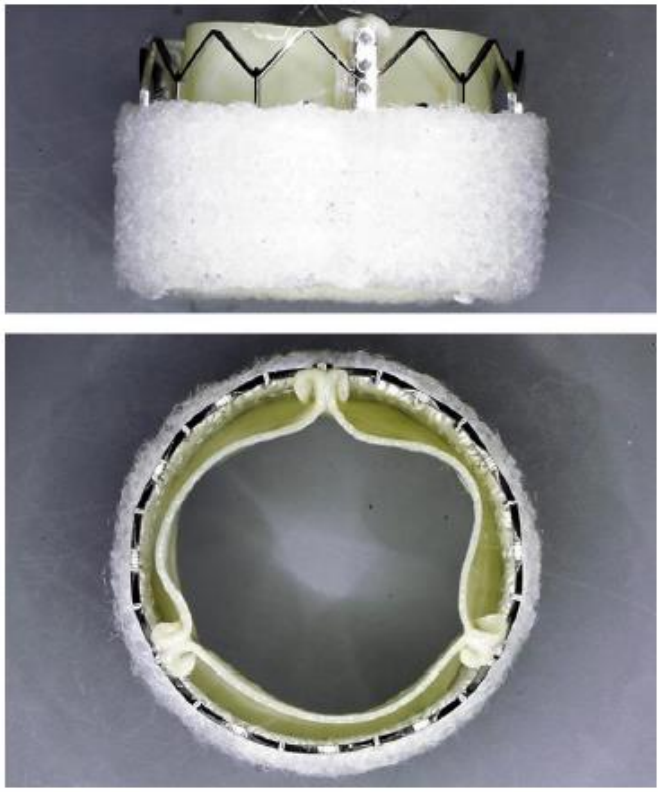

Fig. 1. Cloth valve.

Figure 1 of Walther depicts lateral (top) and longitudinal (bottom) views of the SAPIEN THV

Figure 1 of Walther provides two photographic views (side view and top-down view) of the SAPIEN THV with a cloth encircling the lower two thirds of the valve. *Id.* at Fig. 1, 1121. Walther describes deploying the SAPIEN valves inside "various CEP valves" via the 33 F Ascendra system. *Id.* at 1121.

3. Overview of Levi (Ex. 1008)

Levi is a U.S. Patent that issued on July 19, 2016, from an application filed on October 5, 2011. Ex. 1008, codes (10), (22), (45). Thus, on its face, Levi qualifies as prior art under pre-AIA 35 U.S.C. § 102(e).

Levi is directed to a prosthetic heart valve. Ex. 1008, col. 1, ll. 16–18. Figure 11 of Levi is reproduced below:

FIG. 11

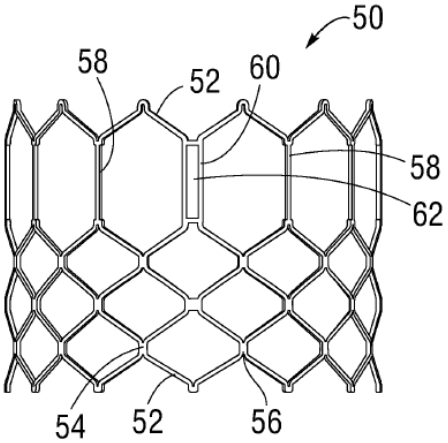

Levi's Figure 11 depicts a frame for use in a prosthetic heart valve.

Specifically, Figure 11 illustrates frame 50 that:

> comprises multiple rows of circumferentially extending, angled struts **52** that are connected to each other at nodes, or connecting portions, **54** and **56**. The uppermost row of struts 52 are connected to an adjacent row of struts by a plurality of axially extending struts **58** and commissure window frame portions 60. Each commissure frame portion 60 defines a slot, or commissure window, **62** for mounting a respective commissure of the valvular structure ….

Id. at cols. 8–9, ll. 61–3.

Figure 2 of Levi is reproduced below:

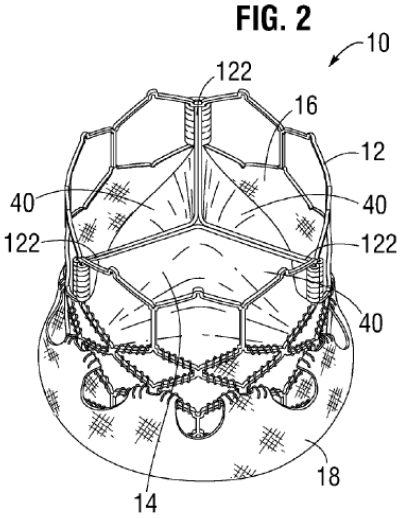

Figure 2 of Levi depicts an exemplary embodiment of a prosthetic heart valve

Figure 2 depicts a prosthetic heart valve 10 including valvular structure 16, surrounded by circular stent or frame 12. *Id.* at Fig. 2, col. 5, ll. 52–58. The bottom portion of frame 12 is covered by inner skirt 16 on the inside of frame 12 and outer skirt 18 on the outside of frame 12. *See id.* at Fig. 2, col. 5, ll. 52–58, col. 9, ll. 24–25, col. 13, ll. 49–50. Valvular structure 16 includes "three leaflets 40, collectively forming a leaflet structure, which can be arranged to collapse in a tricuspid arrangement." *Id.* at Fig. 2, col. 5, ll. 59–61. "[L]eaflets 40 are secured to one another at their adjacent sides to form commissures 122 of the leaflet structures." *Id.* at col. 11, ll. 35–37.

Figure 20 of Levi is reproduced below:

FIG. 20

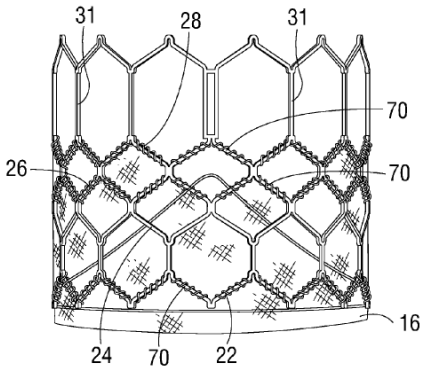

Figure 20 of Levi depicts the assembly of the inner skirt and frame of a prosthetic heart valve

Figure 20 depicts a valve with skirt 16 arranged on frame 12. *Id.* at Fig. 20, col. 10, ll. 5–17. Specifically, frame 12 includes struts 22, 24, 26, and 28. *Id.* at Fig. 20, col. 7, ll. 16–21. "[S]econd, third, and fourth rows of structures 24, 26, and 28 define two intermediate rows of cells defining openings 38. The fourth and fifth rows of struts 28 and 32, along with frame portions 30 and 31, define an upper row of cells defining openings 40." *Id.* at Fig. 20, col. 7, ll. 19–23. "[T]he upper edge of skirt 16 can be tightly secured to structures 28 with sutures 70." *Id.* at Fig. 20, col. 10, ll. 16–18. "[S]kirt 16 can also be secured to the first, second, and third rows of struts 22, 24, and 26, respectively, with sutures 70." *Id.* at col. 10, ll. 28–30.

Figure 42 of Levi is reproduced below:

FIG. 42

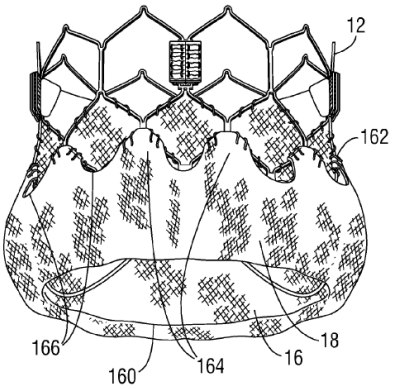

Figure 42 of Levi depicts aspects of an exemplary embodiment of a prosthetic heart valve

Figure 42 illustrates portions of the valve assembly including an outer skirt 18 with projections 164 that are sutured to the outer side of frame 12. *Id*. at Fig. 42, col. 13, ll. 54–61. Skirt 18 includes lower edge 160 that can be sutured to the lower edge of inner skirt 16 at the inflow end of the valve. *Id*. Outer skirt 12 includes excess material between the lower and upper edges. *Id*. at Figs. 2, 43, col. 13, ll. 62–66. Levi discloses that when

> valve **10** is deployed within the body the excess material of the outer skirt **18** can fill in gaps **5** between the frame **12** and the surrounding native annulus to assist in forming a good fluid-tight seal between the valve and the native annulus. The outer skirt **18** therefore cooperates with the inner skirt **16** to avoid perivalvular leakage after implantation of the valve **10**.

Id. at col. 14, ll. 4–9.

4. Petitioner's arguments

Petitioner argues that Spenser II teaches that compressible material 256 "is disposed along an outer surface of the stent structure 252" and is, therefore, attached to the frame. Pet. 57 (citing Ex. 1011 ¶ 145, Fig. 22; Ex. 1003 ¶ 192). According to Petitioner, Spenser II's compressible material is also "free of an outer graft covering between the fibers and the outer frame," because Spenser II never depicts or mentions an "outer graft covering" between the compressible material and frame. *Id.* at 58 (citing Ex. 1003 ¶ 193).

Petitioner also notes that Spenser, cited in combination with Spenser II in Ground III, similarly does not depict or otherwise mention an "outer graft covering" on the exterior of frame 575. Pet. 58 (citing Ex. 1010, Fig. 44a). Petitioner reasons that, if Spenser II's compressible material were added to Figure 44a's frame, there would be no "outer graft covering" between the compressible material's fibers and the frame. *Id.* (citing Ex. 1003 ¶ 194).

With respect to Walther, Petitioner argues that Walther's outer cloth is formed of outwardly extending fibers positioned externally to SAPIEN's outer frame, and that the ends of many of the fibers extend beyond the outer frame. Pet. 29–30 (citing Ex. 1007, 1121, Fig. 1; Ex. 1003 ¶¶ 117–119).

Petitioner contends that Walther's outer cloth is also "free of an outer graft covering between the fibers and the outer frame." Pet. 30 (citing Ex. 1003 ¶ 120). Petitioner argues that Walther's fibers directly contact the frame without any visible intervening graft covering and Walther never

mentions an "outer graft covering." *Id.* (citing Ex. 1007, Fig. 1; Ex. 1003 ¶ 120). Petitioner notes that Walther also teaches that the outer cloth was the only modification made to the SAPIEN prosthetic heart valves. *Id.* (citing Ex. 1007, 1120). Petitioner argues that, as depicted in Figure 1 of Cribier, the SAPIEN valve itself does not include any "outer graft covering" on the exterior of the frame. *Id.* (citing Ex. 1012, Fig. 1; Ex. 1003 ¶ 120). Figure 1 of Cribier is illustrated below:

Figure 1 of Cribier depicts the SAPIEN prosthetic heart valve

With respect to Levi, Petitioner argues that the reference teaches that Levi's valve is also free of an "outer graft covering" between the fibers of the outer skirt and the outer frame. Pet. 85 (citing Ex. 1003 ¶¶ 270–271). Petitioner asserts that Levi teaches that the outer skirt is sutured directly to the outer frame and the inner skirt. *Id.* (citing Ex. 1008, col. 13, ll. 55–61). Consequently, argues Petitioner, Levi does not include any "outer graft covering" on the exterior of the outer frame of the prosthetic heart valve. *Id.* (citing Ex. 1008 Fig. 20; Ex. 1003 ¶¶ 270–271).

5. Patent Owner's Response

Patent Owner responds that both parties and their experts agree that a polyethylene terephthalate ("PET) fabric or cloth can be a "graft covering." PO Resp. 70. Patent Owner notes that Petitioner relies on PET fabrics to satisfy the "inner graft covering" limitation, and its expert, Dr. Buller, agrees. *Id.* (citing Pet. 26; Ex. 1003 ¶¶ 107–108, 142, 214, 58; Ex. 2052, 40–41, 60; Ex. 2055 ¶ 109). Patent Owner additionally points to Dr. Buller's characterization of a "graft material" as "a thin-walled biocompatible, flexible and expandable, low porosity woven fabric, such as polyester or PTFE." *Id.* at 70–71 (citing Ex. 1003 ¶ 58).

Patent Owner's expert, Dr. Brecker, agrees that "[a] 'graft covering' may be formed from PET and PTFE, depending upon its density/porosity. Numerous references refer to a 'graft covering' made of PET or PTFE.… Such materials may be low porosity." PO Resp. 71 (quoting Ex. 2051 ¶ 144 (citing Ex. 2059 ¶ 32; Ex. 2060 ¶ 64; Ex. 2061 ¶ 196; Ex. 2062, 472; Ex. 2063, col. 1, ll. 41–46)). Patent Owner therefore argues that the record thus confirms a PET fabric or cloth may form a "graft covering," depending on its density/porosity. *Id.* at 71–72.

a. Spenser

Patent Owner asserts that Petitioner relies on Spenser II's PET "compressible material [that] may resemble a cloth or fabric" as the "outer seal," and points to Spenser II's "fibers extending from the surface of the material" as the "outwardly extending fibers." PO Resp. 81 (citing Pet. 55–

56 (quoting Ex. 1011 ¶ 145)). Patent Owner notes that Spenser teaches that the compressible material may be formed of PET. *Id.* (citing Ex. 1011 ¶ 145). Patent Owner also points to Dr. Buller's Declaration, which describes Spenser II's compressible material as a "velour-like woven PET cloth or fabric." *Id.* (quoting Ex. 2008 ¶ 305).

Patent Owner next points to Dr. Brecker's testimony that Spenser II includes an outer graft covering between the fibers and the frame:

> Petitioner and Dr. Buller make clear that "woven PET" and a "velour-like woven PET," particularly one with low porosity, is an outer graft covering. Thus, by Petitioner's own admissions, Spenser II's compressible material *is* an outer graft covering from which "fibers extend[] from the surface." Consequently, Spenser II includes an "outer graft covering" (the compressible material) between its frame and the fibers (that extend from the surface of the compressible material).

PO Resp. 82 (quoting Ex. 2051 ¶¶ 152–53) (internal citations omitted).

Patent Owner also argues that, during prosecution, Patent Owner argued to the Examiner that Spenser II was distinguished from the '846 patent on this very basis; that it was not "free of an outer graft covering" as claimed:

> [T]he seal of Spenser [II] appears to be relatively thick in construction, including a graft covering or sleeve with fibers extending from the sleeve.
>
> ….
>
> Spenser [II] appears to include an outer graft covering between the fibers and the outer frame... Finally, Spenser [II] is not modifiable to be free of an outer graft covering, as such

> modification would have no structure for the fibers to attach to since the fibers emanate from compressible material 256.

Ex. 1002, 147.

Patent Owner disputes Petitioner's contention that the "free of an outer graft covering" limitation is met because "Spenser II never pictures or mentions an 'outer graft covering' between the compressible material and frame." Pet. 84 (quoting Pet. 58). Patent Owner asserts that the challenged claim requires the absence of a graft covering between the fibers and the frame, and not the outer seal and the frame. *Id.* According to Patent Owner, Petitioner identifies Spenser II's compressible material as the "outer seal," and Spenser II makes clear that the "fibers extend[] from the surface of the [compressible] material." *Id.* (citing Ex. 1011 ¶ 145). Therefore, argues Patent Owner, the outer graft covering (the compressible material) is between the frame and the fibers that extend from it. *Id.*

b. Walther

Patent Owner again notes Petitioner and Dr. Buller acknowledge that a low-porosity woven PET cloth is a "graft covering," and asserts that Walther teaches that its outer cloth is made of PET. PO Resp. 75 (citing Pet., 28–31, 52–55, 86–88; Ex. 2052, 90; Ex. 1002 ¶ 119). Patent Owner also points to Dr. Buller's testimony that Walther's PET cloth is made of "woven fibers," and identifying Walther's outer cloth as a "velour-like woven PET cloth ...." *Id.* (citing Ex. 1003 ¶ 118; Ex. 2008 ¶ 305). But, Patent Owner asserts, Petitioner and Dr. Buller do not explain why

Walther's "velour-like woven PET cloth" would not be an outer graft covering. *Id.*

Patent Owner next points to Hartley[11], which is prior art and was discussed by the Examiner during prosecution of the '846 patent. PO Resp. 69. Hartley teaches "a velour band at a distal end of the stent graft." *Id.* (quoting Ex. 1002, 140–141; Ex. 2056 ¶ 35). According to Petitioner, velour fabric adds "floating portions" of yarn on the surface of a woven graft to produce "three-dimensional loose surface structures" that serve as "the framework for tissue attachment." *Id.* at 69–70 (citing Ex. 2057, 4). Patent Owner distinguished Hartley for teaching "a graft covering on the outside of the metal stent frame, and the fibers extend from the graft covering." *Id.* at 70 (citing Ex. 1002, 148). Patent Owner notes that the Examiner agreed, finding "Hartley does not disclose or render obvious … wherein the outer seal is free of an outer graft covering between the fibers and the outer frame." *Id.* (citing Ex. 1002, 20).

Patent Owner continues, asserting that Hartley's velour band resembles Walther's cloth, stating that Hartley's woven velour fabric adds extra "floating portions" of yarn giving it "three-dimensional loose surface structures," much like the fibers emanating from Walther's outer cloth. PO Resp. 75 (citing Ex. 2057, 4).

---

[11] Hartley (US 2004/0256759 A1, December 23, 2004) ("Hartley") Ex. 2056.

According to Dr. Brecker, a woven velour structure is similar to that of "the base of a pile carpet":

> Dr. Buller describes Walther's outer cloth as a "velour-like woven PET cloth." A velour-like woven PET cloth may be analogized to a pile carpet.
>
>
>
>
> Like all woven fabric, Walther's PET outer cloth appears to be formed by "an over-and-under pattern" of yarns, each composed of a bundle of fibers. This woven fabric is analogous to a pile carpet's base. Woven velour has an additional "floating portion" of yarn that "produce three-dimensional loose surface structures." This is analogous to a pile carpet's pile fabric.

PO Resp. 76–77 (quoting Ex. 2051 ¶ 146) (citations omitted).

Dr. Brecker continues:

> [I]f we magnify Walther's Figure 1, we can identify what appears to be the dense woven PET base layer (highlighted in yellow in the second image) beneath the fibrous finish.

> This image is consistent with Walther's PET outer cloth being a woven velour. I note that Petitioner repeatedly relies on a dense, low porosity PET layer/cloth/skirt as the claimed "inner graft covering." Accordingly, a POSITA would understand that the dense woven PET layer would be an "outer graft covering" between the fibers and the valve's outer frame.

PO Resp. 77–79 (citing Ex. 2051 ¶¶ 147–148) (citations omitted). Patent Owner argues that, from the magnified image of Walther's Figure 1, a base of densely woven PET between the fibers and the frame is apparent, and that, in a "velour-like woven PET" cloth, the woven base may contact the frame, but the outwardly extending fibers presumably would not. *Id.* at 79 (citing Ex. 2051 ¶ 148).

Patent Owner asserts that Dr. Buller accurately referred to Walther as being a "cloth-covered SAPIEN." PO Resp. 79 (citing Ex. 2052 86, 90).

According to Patent Owner, Walther's cloth creates a seal to address paravalvular leakage ("PVL"). *Id.* (citing Ex. 2052 88; Ex. 1007, 1120).

Patent Owner contends that Dr. Buller's position that Walther's PET outer cloth is not a graft covering is not credible, given his opinion that the fibers depicted in Figure 9 of the '846 patent "could be seen as" and "could easily be considered to be a graft covering." PO Resp. 80 (quoting Ex. 2052, 154–155). Figure 9 of the '846 patent is reproduced again below:

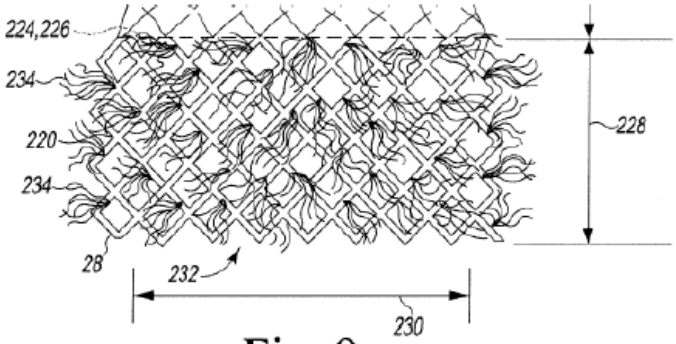

Fig. 9

Patent Owner asserts that Figure 9 does not depict a "graft covering," but that one cannot reasonably conclude that Figure 9's sparsely distributed fibers "easily could be considered to be a graft covering" while also concluding that Walther's thick outer cloth could not be an outer graft covering. *Id.*

Patent Owner summarizes Petitioner's position as being: (1) low density, woven PET "is" a graft covering; (2) woven PET is a "graft covering"; (3) Walther's outer cloth is made of a "velour-like woven PET"; (4) Walther's outer cloth is "free of an outer graft covering"; and (5) Figure 9's fibers "could easily be considered to be a graft covering. PO Resp. 80–81 (citing Pet. 49, 79–80; Ex. 2008 ¶ 305). Patent Owner argues

that Petitioner's position is thus incoherent. Patent Owner also notes that, during prosecution, the Examiner agreed that Hartley's "velour band" with "loops of fibrous material," which resembles Walther, is not "free of an outer graft covering." *Id.* at 81 (citing Ex. 1002, 20, 140–141).

c. Levi

Patent Owner next argues that Petitioner relies on Levi's woven PET inner skirt as the "inner graft covering," but provides no reason why Levi's woven PET outer skirt would not likewise be an outer "graft covering." PO Resp. 72 (citing Pet., 79-80 (citing Ex. 1008, col. 13, ll. 50–53, col. 9, ll. 53–54)). Petitioner notes that, when arguing that the outer seal is "free of an outer graft covering" Petitioner points to Figure 20 of Levi, which illustrates the device without the outer skirt attached. *Id.* at 73 (citing Pet. 85).

Patent Owner also argues that Petitioner provides no explanation for why Levi's "woven PET" inner skirt is a "graft covering" while Levi's "woven PET" outer skirt is not, despite the fact that both parties and their experts agree that woven PET may form a "graft covering." PO Resp. 74.

6. Petitioner's Reply

Petitioner asserts that there is no dispute that Walther and Spenser II[12] do not describe an outer graft covering, and that the outer cloths look homogeneous and are described as being formed from a single material (i.e., PET and a "compressible material"). Pet. Reply 19 (citing Pet. 30–31, 52–59).

Petitioner argues that Patent Owner relies on a using a highly-magnified version of Figure 1 of Walther as depicting a "dense PET layer." Pet. Reply 19 (citing PO Resp. 78). However, Petitioner argues, that the magnified Figure 1 is unauthenticated and uncorroborated, and that Dr. Brecker confirmed during his deposition that he did not create the image and did not know the alleged level of magnification. *Id.* (citing Ex. 1073, 351–352). Petitioner states that Dr. Brecker's testimony that "if we magnify Walther's Figure 1, we can identify what appears to be the dense woven PET base layer" is speculative, and the magnified images blurred and pixelated. *Id.* at 19–20 (citing Ex. 2051 ¶ 136).

Petitioner also contends that Patent Owner's position that Spenser II's compressible material includes multiple layers is contradicted by Spenser II's teaching that a "a layer of compressible material 256 is disposed along an outer surface of the stent structure 252." Pet. Reply 20 (citing PO Resp.

[12] Petitioner does not present any arguments in reply to the Patent Owner's position with respect to this disputed limitation and Levi.

83; and quoting Ex. 1011 ¶ 145). Petitioner also disputes Patent Owner's argument that the "fibers extending from the surface of the material" must be separate from the alleged dense layer. *Id.* (citing PO Resp. 81–83). Petitioner argues that Figure 22 "does not clearly show any such demarcation within the structure of the compressible material." *Id.* Petitioner contends that, to the contrary, Spenser II describes the compressible material as "a layer" that is made of a single material, PET. *Id.* (citing Ex. 1011 ¶ 145).

Petitioner argues further that Patent Owner's analogizing of the prior art cloths of Walther and Spenser to a pile carpet supports Petitioner's position that there is no "base" layer in Walther or Spenser II. Pet. Reply 20 (citing PO Resp. 77). In pile carpeting, argues Petitioner, the base and pile fabric are different materials creating a clear line of demarcation. *Id.* Petitioner asserts that the cloths of Walther and Spenser II are all the same material (PET) and, thus, do not have a separate "base" layer like carpet. *Id.* at 20–21 (citing Ex. 1007, 1121; Ex. 1011 ¶ 145).

Petitioner also contends that the prosecution history also contradicts Patent Owner's arguments on this limitation. Pet. Reply 21. According to Petitioner, during prosecution, Patent Owner argued that Petitioner's SAPIEN 3 Ultra THV "appears to be covered by the claimed invention." *Id.* (citing Ex. 1002, 145). However, argues Petitioner, Patent Owner now asserts that any velour-like PET fabric includes an "outer graft covering" between its extending fibers and the frame, and also suggests that an opaque outer seal cannot satisfy this limitation. *Id.* (citing PO Resp. 9–10, 49–53,

75–89; Ex. 1073, 338–340). Petitioner asserts that this is the structure of the outer skirt on Petitioner's SAPIEN 3 Ultra,[13] which is a velour-like PET fabric and opaque. *Id.* (citing Ex. 2026, 8–9).

7. Patent Owner's Sur-Reply and Petitioner's Sur-Sur-Reply

In its Sur-Reply, Patent Owner acknowledges Petitioner's argument that Walther's and Spenser II's coverings are all the "same material" but, contends that this argument irrelevant because the claim does not say an outer graft covering may be present if it is made of the "same material" as the fibers. PO Sur-Reply 22. Rather, contends Patent Owner, the claim recites that the valve must be "free of an outer graft covering" between the fibers and the frame. *Id.* Patent Owner repeats its assertion that a "velour-like woven fabric" may have a woven base with floating fibers, and states that, although both may be made of the "same material," the base and fibers extending therefrom are distinct. Patent Owner also points to Spenser II's "fibers" that "extend[] from the surface of the material." PO Sur-Reply 22 (citing Ex. 1011 ¶ 145).

Turning to Petitioner's argument concerning the SAPIEN Ultra 3 valve's "outer skirt" that is allegedly "velour-like … and opaque," (*see* Pet. Reply, 21), Patent Owner responds that Petitioner's evidence reveals

[13] Petitioner's SAPIEN 3 ULTRA TAVR has been accused of infringing the '846 patent in the related district court litigation. *See* Section I.B above.

SAPIEN 3 Ultra's outer fibrous layer is cavernulous, displaying numerous gaps through which no outer graft covering is visible. PO Sur-Reply 23. Patent Owner points to Thomas[14] as illustrating the differences between the outer covering in the SAPIEN 3 and SAPIEN 3 Ultra valves:

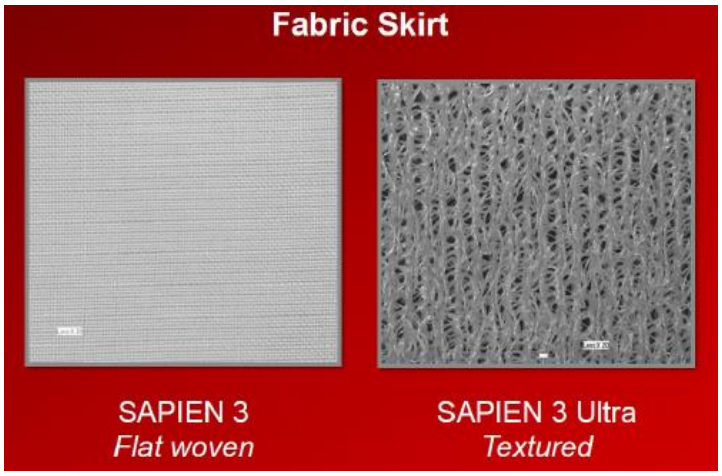

Figure from Slide 8 of Thomas illustrating the differences in the outer covering material in the SAPIEN 3 and SAPIEN 3 Ultra heart valves

Patent Owner asserts that Petitioner further suggests that SAPIEN 3 Ultra includes a "velour-like PET fabric," but does not prove it is "velour-like" or "woven." Ultra has instead a "knitted, textured PET material." PO Sur-Reply 25 (citing Ex. 2026, 8).

With respect to Walther, Patent Owner again contends that Walther's Figure 1 shows the "dense woven PET base layer" is "directly abutting the frame," and argues that Walther's woven PET base explains why Walther's

[14] M. Thomas, SAPIEN 3 Ultra Valve: First-In-Human Experience, Edwards Lifesciences Slide Deck. ("Thomas") Ex. 2026.

cloth is opaque. PO Sur-Reply 25. Petitioner also points to Figure 2 of Cheung[15], which purports to show Walther's 9000 MIS prosthetic heart valve has a backing layer from which fibers may extend outwardly. *Id.* at 25–26. Figure 2 of Cheung, and an enlargement by Patent Owner, is reproduced below:

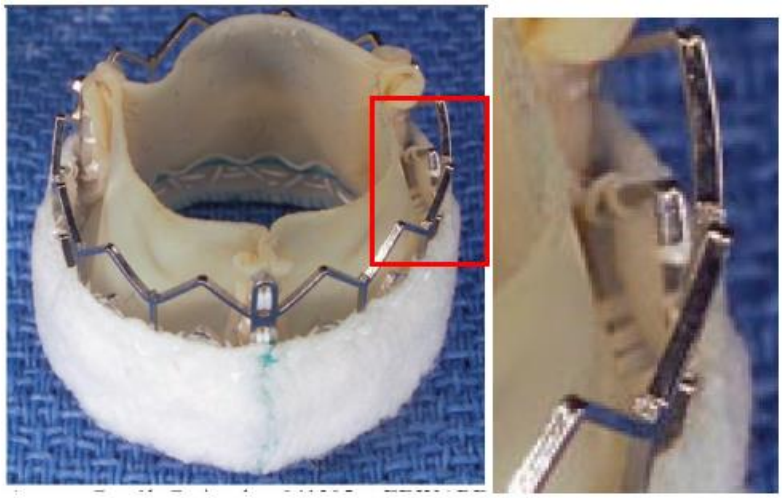

Figure 2 of Cheung (left) and detail (right) depict the "fabric cuff surrounding the Cribier-Edwards transcatheter valve"

Patent Owner contends that the cloth's "smooth interior base layer contrasts with Walther's fuzzy exterior and constitutes a graft covering between the frame and the fibers." *Id.* at 27.

Petitioner disputes Patent Owner's interpretation of Cheung's

[15] A. Cheung et al., *Transapical Transcatheter Mitral Valve-in-Valve Implantation in a Human*, 87 ANN. THORAC. SURG. e18–20 (2009) ("Cheung") Ex. 1017.

Figure 2. Pet. Sur-Sur-Reply 5. According to Petitioner, Patent Owner's magnified detail of Figure 2 of Cheung shows that the outer cloth does not have a backing layer and that small fibers extend from the inside of the cloth near the front of the valve. *Id.* Petitioner contends that the image does not prove that Walther's outer cloth has a "backing layer," particularly given that Walther's figures do not show a "backing layer" and display fibers extending inwardly of the metal frame. *Id.* (citing Ex. 1007, Fig. 1; also citing *Edwards Lifesciences Corp. v. Aortic Innovations, LLC*, IPR2022-00556, Paper 10 at 28 (PTAB Sept. 8, 2022)).

8. Analysis

As an initial matter, there is little disagreement between the parties and their experts that PET can be a graft covering. However, the disputed limitation requires something more. Specifically, it requires that "the outer seal is free of an outer graft covering between the fibers and the outer frame."

We are not persuaded that Petitioner has demonstrated, by a preponderance of the evidence of record, that Levi, Spenser II, or Walther, upon which Petitioner relies, teaches or suggests the incorporated limitation of claim 6 reciting "wherein the outer seal is free of an outer graft covering between the fibers and the outer frame." As an initial matter, we must determine what is meant by the claim term "outer graft covering."

Neither party proposes an express construction of the claim term "outer graft covering" other than the "ordinary and customary meaning" as

understood by a person of ordinary skill in the art at the time of the invention. *See* Pet. 23; PO Resp. *generally*; *see also Phillips*, 415 F.3d 1312–13. We consequently employ the *Phillips* standard to arrive at a definition of the claim term "outer graft covering."

We determine that, as the plain language of the claim term suggests, an "outer graft covering" must circumferentially cover some, or all, of the metallic outer frame of the prosthetic heart valve. *See* Merriam-Webster, *Cover*, *available at:* https://www.merriam-webster.com/dictionary/cover (last visited March 2, 2023) (defining "cover," relevantly, as "something that is placed over or about another thing"). *See* Ex. 3004. Consequently, we understand an "outer graft covering" to be a structure, such as a cloth or fabric or other material, that circumferentially covers all or part of, the metallic outer frame. Importantly, because an outer graft covering must cover the external surface of the outer frame, we understand this claim term to mean that the cover must extend over (i.e., "cover") not only the struts and members of the metallic outer frame, but must also cover the open spaces, or interstices, in the intervals between those struts and members. Consequently, we construe the limitation reciting "free of an outer graft covering between the fibers and the outer frame" to mean that there can be no such outer graft covering present anywhere between the outwardly extending fibers and the metallic outer frame.

The Specification of the '846 patent further reinforces this definition of an "outer graft covering." Figure 11 of the '846 patent is reproduced again below:

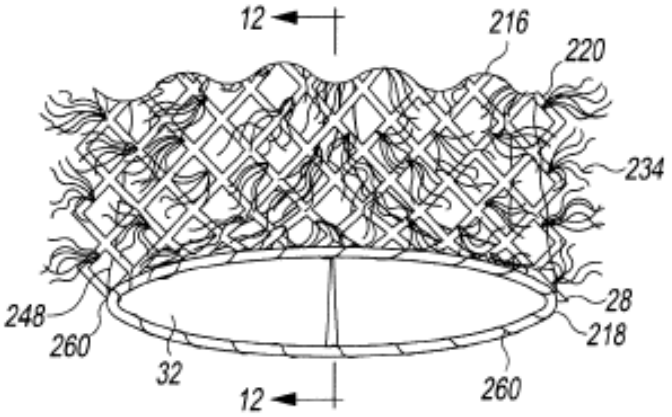

Fig. 11

Figure 11 of the '846 patent is a perspective view of a proximal end of a prosthetic component 212

Figure 11 depicts the outer seal, consisting of outwardly (i.e., radially) extending fibers 234 positioned externally to the outer frame 216, the fibers being attached at their proximal terminus to the outer frame 216. No structure or material is depicted as covering the spaces between the struts and members of the frame or as being between the fibers and the frame. Figure 9 of the Specification depicts a similar arrangement:

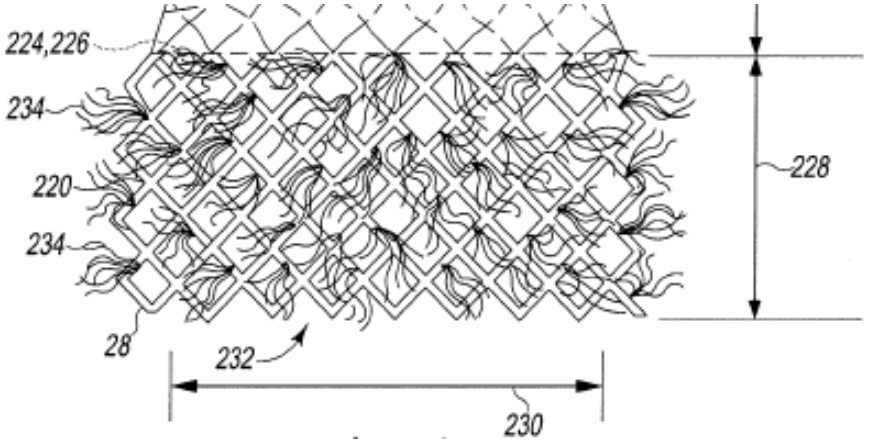

Figure 9 (detail) of the ’846 patent depicts a lateral view of the claimed invention (*see also id.* at Figure 19)

Figure 13 of the Specification, reproduced again below, depicts a similar situation from a view through the longitudinal axis of the prosthetic hear valve:

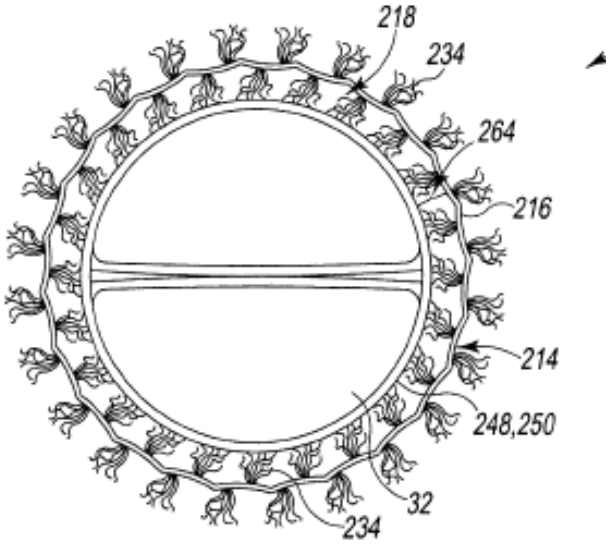

Fig. 13

Figure 13 of the ’846 patent depicts a plan view of the prosthetic device 212

The Specification further discloses, with respect to the outwardly extending fibers, that:

> In some embodiments, a plurality of fibers *may be attached to the third section of the self-expanding frame* [i.e., the outer frame surrounding the heart valve]. When the balloon-expandable frame is in the expanded position, the outer surface of the balloon-expandable frame may be engaged with the plurality of fibers.

Ex. 1001, col. 3, ll. 26–30 (emphasis added). The Specification elaborates that:

> In the illustrative embodiment, collagen fibers **234** are attached to the proximal section **220** to aid in preventing paravalvular leaks and migration of the proximal component **212** within the aortic walls. The fibers **234** extend outwardly from the proximal section **220** and inwardly into the passageway **232**.

Id. at col. 12, ll. 43–48.

The '846 Specification further discloses that:

> [T]he proximal section **360** of the self-expanding frame **350** [i.e., the portion surrounding the prosthetic valve, *see, e.g.*, col. 4, ll. 44–49] is formed in an open-cell stent configuration, and each of the sections **62**, **64** is formed in a Z-stent configuration. It should be appreciated that in other embodiments the sections **360**, **62**, **64** may be formed in a single configuration, including the open-cell stent configuration, mesh-like stent configuration, or Z-stent configuration. The sections **60**, **62**, **64** may also be formed as a single monolithic component.
>
> *[T]he outer surface **314** of the proximal section **360** of the frame **350** is uncovered such that **60** fluid is permitted to pass through the openings **318***. The outer surface **316** of the sections **62**, **64** are covered with low profile polyester, ePTFE, or other nonporous covering material **84** such that fluid is prevented from passing through the surface **320**.

Ex. 1001, col. 16, ll. 50–65 (emphasis added).

Given these disclosures of the '846 Specification, as well as the ordinary and customary meaning of the claim language (as would be understood by the ordinarily skilled artisan), as we explained above, we conclude that an "outer graft covering" is a material or structure that circumferentially covers at least a portion of the outer surface of the

prosthetic heart valve, such that both the struts and members of the metallic outer frame, as well as the interstices between those struts and members, is covered by the outer graft covering.

Furthermore, this definition is consistent with that argued by Patent Owner's expert. As Dr. Brecker explains:

> It is counter-intuitive that a sparse distribution of fibers as taught could create a seal. I had not seen any prior art TAVR with this arrangement of fibers. Similarly, Dr. Buller was unaware of any stent with fibers like those present in the Patent's figures. Certainly, the prior art outer cloths identified by Petitioner in, e.g., Walther, Cheung, Spenser II, and Levi look nothing like what is presented in the Patent. By including a sparse distribution of fibers without an outer graft covering, however, this arrangement allows for a narrow crimp profile.
>
> Thus, the invention allows for an endovascularly-deliverable TAVR that limits PVL. It teaches how to achieve this end through[] outwardly… extending fiber … and the lack of an outer graft covering. I do not see such an outer seal in Petitioner's/Dr. Buller's references.

Ex. 2051 ¶¶ 37–40 (figures and citations omitted).

Bearing this claim term construction in mind, we deal with each prior art reference in turn.

a. Levi

In our Decision to Institute, we preliminarily determined that the PET "outer skirt" of Levi constitutes an "outer graft covering." Dec. 27. As we stated in that Decision:

> Similarly, Petitioner provides no persuasive evidence that Levi discloses the limitation of disclaimed independent claim 1 (from

> which challenged claim 6 depends) reciting "wherein the outer seal is free of an outer graft covering between the fibers and the outer frame." We agree with Patent Owner that, having argued that "Levi teaches that the outer skirt is sutured directly to the outer frame and the inner skirt" and "Levi does not include any 'outer graft covering' on the exterior of the outer frame," Petitioner has failed to recognize that Levi's outer skirt is an "outer graft covering."

Id. This is particularly so because we also concluded in that Decision that the outer skirt of Levi does not "meet[] the requirements of a sealing material with outwardly extending fibers positioned externally to the outer frame." *Id.* at 26. Specifically, we concluded that:

> We agree with Patent Owner that nothing in Levi suggests that the "woven PET fabric" used to form the outer skirt expressly or inherently meets this requirement. We are not persuaded by Petitioner's contention that the laser-cut woven PET disclosed for use in Levi's outer skirt would necessarily exhibit the type of "hairiness" described for PET yarn used in other textile applications.

Id. at 26.

Petitioner does not contest these conclusions in its Reply or Sur-Sur-Reply to Patent Owner's Response, or otherwise provide any additional argument or evidence to demonstrate that the outer skirt of Levi does not constitute the outer graft covering prohibited by claim 6. Consequently, our initial determinations stand. Furthermore, our definition of outer graft covering herein as "a material or structure that circumferentially covers at least a portion of the outer surface of the prosthetic heart valve, such that both the struts and members of the metallic outer frame, as well as the

interstices between those struts and members, is covered by the outer graft covering" reinforces our prior conclusion that the outer skirt of Levi constitutes an outer graft covering that is prohibited by claim 6. We consequently conclude that Petitioner has not met its burden with respect to demonstrating, by a preponderance of the evidence, that Levi teaches or suggests the limitation reciting "wherein the outer seal is free of an outer graft covering between the fibers and the outer frame."

b. Spenser II

Spenser II teaches:

> In accordance with yet another preferred embodiment, a stented valve is provided wherein a compressible material, such as a clot[h] or fabric, *extends around an exterior portion of the stent.* The compressible material may be formed of polyethylene terephthalate (PET) and is configured to expand into the gaps.

Ex. 1011 ¶ 55 (emphasis added). More specifically, Spenser II teaches that:

> To reduce or prevent paravalvular leakage, *a layer of compressible material 256 is disposed along an outer surface of the stent structure 252*. The material may extend partially around the stent structure or may extend entirely around the stent structure, such as in the form of a sleeve. In one preferred embodiment, the compressible material is formed of polyethylene terephthalate (PET) and has a thickness ranging from about 1 to 5 mm. In certain configurations, the compressible material 256 *may resemble a cloth or fabric having small fibers extending from the surface of the material*. In various embodiments, the fibers may be straight, curved or hook-shaped. The compressible material expands after deployment at a treatment site. As the compressible material expands, it fills the gaps between the stented valve and the surrounding tissue.

> Accordingly, the compressible material creates a mechanical seal that prevents paravalvular leakage.

Id. at ¶ 145 (emphasis added).

Figure 22 of Spenser depicts an embodiment corresponding to these descriptions:

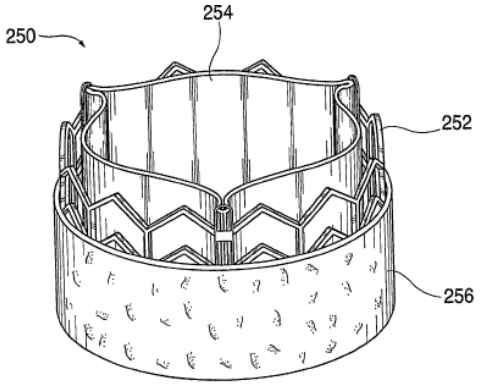

FIG. 22

Spenser thus teaches a "a compressible material, such as a clot[h] or fabric, extending around the exterior portion" of the valve, as depicted in Figure 22, and may be "in the form of a sleeve." Ex. 1011 ¶¶ 55, 145. This cloth or material can be made of PET, and we find that a person of ordinary skill in the art would understand that a cloth or fabric can comprise woven fibers, as in the woven outer skirt of Levi. Ex. 1011 ¶ 145; Ex. 1008, col. 13, ll. 50–54; *see also* Pet. 60 (citing "Cloth," MERRIAM-WEBSTER ONLINE DICTIONARY, *available at*: https://www.merriam webster.com/dictionary/ cloth (last visited February 14, 2023) (defining "cloth" as "a pliable material made usually by weaving, felting, or knitting natural or synthetic fibers and filaments")); *see also* "Fabric," *id.*, *available at*: https://www.merriam-

webster.com/ dictionary/fabric (last visited February 14, 2023) (defining "fabric" as "a material that resembles cloth").

Both the descriptions and Figure 22 of Spenser II show a cloth covering the proximal outer surface of the metallic outer frame of the prosthetic heart valve, including the spaces between the struts and members of the frame. Furthermore, the reference discloses that any fibers extending outwardly from the cloth arise from the surface of the cloth, and are not attached directly to the frame, as depicted in Figure 11 of the '846 Specification. Thus, even were such fibers made of the same material as the cloth, which is not clear from the reference's disclosure, the cloth would be between the surface-residing fibers and the metallic outer frame.

We conclude that a person of ordinary skill in the art would have recognized that the sleeve-like cloth or fabric of Spenser II corresponds to an outer graft covering between its fibers and its outer frame, and such a covering would be between Spencer II's surface fibers and its metallic outer frame. Such an outer graft cover is expressly prohibited by the language of claim 6, even if it and associated extending fibers are of the same material.

Petitioner argues that Spenser II never "depicts or mentions an 'outer graft covering' between the compressible material and frame" and that "the outer cloths look homogeneous and are described as being formed from a single material." Pet. 58; Pet. Reply 19. We agree that Spenser II does not use the precise term "outer graft covering." Nevertheless, we find that the Spenser II, including Figure 22, discloses that the cloth or fabric is disposed along the outer surface of the prosthetic heart valve, including over the

spaces between the struts and members of the metallic outer frame. We conclude that this structural arrangement would be understood by a skilled artisan as describing that the cloth or fabric constituted an outer cover for the graft (i.e., the prosthetic valve). *See Phillips*, 415 F.3d at 1312–13.

Petitioner also contends that Spenser II's teaching that a "a layer of compressible material 256 is disposed along an outer surface of the stent structure 252" argues against Patent Owner's contention that Spenser II's compressible material includes multiple layers. Pet. Reply 20. We are not persuaded by Petitioner's argument. As we have previously explained, Spenser II expressly describes "cloth or fabric having small fibers extending from the surface of the material." Ex. 1011 ¶ 145. Furthermore, we have also explained that PET materials can have different properties (i.e., woven vs "hairy") depending upon how the material is processed. *See* Dec. 23–24; *see also* Ex. 2019, Fig. 1A; Ex. 2020, 23–24, Fig. 8; Ex. 2021, Fig. 1.18A.

We therefore conclude, for the reasons we have explained, that Petitioner has failed to demonstrate, by a preponderance of the evidence, that Spenser II teaches or suggests "wherein the outer seal is free of an outer graft covering between the fibers and the outer frame."

c. Walther

Walther teaches benchtop evaluation of the "*in vitro* hydrodynamic performance of the Edwards SAPIEN + cloth THV implanted within the Carpentier-Edwards Perimount (CEP) valve" as a testbed for evaluating

prosthetic-valve-in-prosthetic-valve replacement techniques. Ex. 1008, Abstr.

Walther teaches that "[t]he current valve-in-valve study is focused on the use of an Edwards SAPIEN™ trans-catheter heart valve (THV) cloth valve (*see* Fig. 1), which is identical to the SAPIEN model, but has an added outer cloth." Ex. 1008, 1120. Walther further teaches that:

> The addition of an outer cloth to the SAPIEN™ cloth valve is designed to reduce paravalvular leak by creating a seal between the two valves and improve resistance to migration with better 'fit' within surgical Perimount valves.
>
> Why is the outer cloth required?
>
> - reduce paravalvular leak;
> - increase 'fit' within EW surgical Perimount valves; and
> - promote tissue ingrowth, which further decreases paravalvular leakage.

Id. Walther states that the outer cloth layer consisted of "[a]n added poly(ethylene terephthalate) (PET) cloth [] stitched onto the perimeter of each SAPIEN valve." *Id.* at 1121.

Walther depicts the SAPIEN-plus-cloth valve in both transverse and longitudinal views in Figure 1, which is reproduced again below:

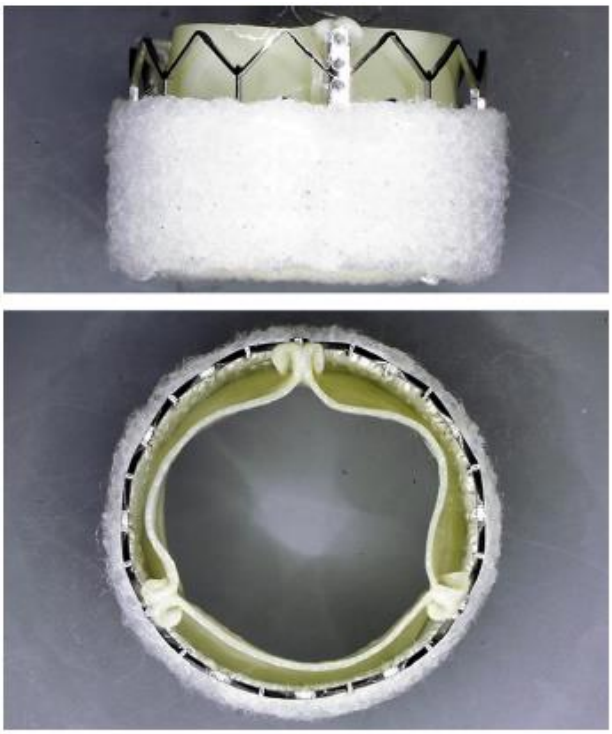

Figure 1 of Walther depicts lateral (top) and longitudinal (bottom) views of the prosthetic SAPIEN-plus-cloth valve

Walther provides no additional details concerning the structure of the SAPIEN-plus-cloth prosthetic valve.

Our reasoning with respect to Walther parallels our reasoning with respect to Spenser II. Walther teaches an outer cloth that circumferentially covers the entire proximal outer surface of the SAPIEN prosthetic valve. *See* Ex. 1008, Fig. 1. Other variants of Walther, such as Petitioner's SAPIEN 3 and the SAPIEN 3 Ultra TAVRs, also have a cloth cover extending circumferentially over the proximal outer surface, including over the open spaces between the struts and members of the outer frame of the prosthetic valve, and directly adjacent to the outer frame. *See, e.g.*, Ex. 2026, 7, 8. Furthermore, at least a portion of the outer cloth cover must

be positioned between the outer frame of the valve and its outwardly extending fibers in a manner prohibited by the language of claim 6 (much as we explained above regarding Spencer II). We find that a person of ordinary skill in the art would understand that the outer cloth disclosed by Walther (as well as Petitioner's SAPIEN 3 and SAPIEN 3 Ultra variants of the SAPIEN valve disclosed by Walther) is qualitatively different from the examples of the claimed feature of "free of an outer graft covering between the fibers and the outer frame" described in the '846 patent showing the fibers attached directly to, and extending directly from, the struts and members of the outer frame, but leaving the struts and members of the outer frame uncovered. *See, e.g.*, Ex. 1001, col. 16, ll. 50–65, Figs. 9, 11, 13. We conclude that a skilled artisan would have found that the outer cloth of Walther would constitute an "outer graft covering" under our claim construction and that, as plainly shown in the photographs above, this covering resides between the surface fibers and the metal stent portion of the device, and therefore does not satisfy claim 6's limitations.

III. CONCLUSION

For the reasons we have set forth above, and after having analyzed the entirety of the record and assigning appropriate weight to the cited supporting evidence, we determine that Petitioner has failed to establish, by a preponderance of the evidence, that claim 6 of the '846 patent is unpatentable.

IV. ORDER

Accordingly, it is

ORDERED that Petitioner has failed to show by a preponderance of the evidence that claim 6 of the '846 patent is unpatentable;

FURTHER ORDERED that, because this is a Final Written Decision, parties to the proceeding seeking judicial review of the decision must comply with the notice and service requirements of 37 C.F.R. § 90.2.

Claims	**35 U.S.C. §**	**Reference(s) /Basis**	**Claims Shown Unpatentable**	**Claims Not Shown Unpatentable**
6	103	Cribier, Walther		6
6	103	Spenser, Walther		6
6	103	Spenser, Spenser II		6
6	102(e)	Levi		6
6	103	Levi		6
6	103	Levi, Walther		6
6	103	Levi, Spenser II		6
Overall Outcome				6

PETITIONER:

Craig Summers
2css@knobbe.com

Joshua Stowell
2jys@knobbe.com

Brian Barnes
brian.barnes@knobbe.com

PATENT OWNER:

Kenneth Weatherwax
weatherwax@lowensteinweatherwax.com

Vinson Lin
lin@lowensteinweatherwax.com

Nathan Lowenstein
lowenstein@lowensteinweatherwax.com

Edward Hsieh
hsieh@lowensteinweatherwax.com