US 20050138353A1

(19) United States

(12) Patent Application Publication (10) Pub. No.: US 2005/0138353 A1

Spies et al. (43) Pub. Date: Jun. 23, 2005

(54) IDENTITY-BASED-ENCRYPTION MESSAGE MANAGEMENT SYSTEM

(76) Inventors: **Terence Spies**, San Mateo, CA (US); **Guido Appenzeller**, Menlo Park, CA (US)

Correspondence Address:
G. VICTOR TREYZ
FLOOD BUILDING
870 MARKET STREET, SUITE 984
SAN FRANCISCO, CA 94102 (US)

(21) Appl. No.: 10/744,850

(22) Filed: Dec. 22, 2003

Publication Classification

(51) Int. Cl.[7] H04L 9/00

(52) U.S. Cl. 713/153

(57) ABSTRACT

Systems and methods for managing email are provided. Some of the email may be encrypted using identity-based-encryption (IBE) techniques. When an incoming IBE-encrypted message for a recipient in an organization is received by a gateway at the organization, the gateway may request an IBE private key from an IBE private key generator. The IBE private key generator may generate the requested IBE private key for the gateway. The gateway may use an IBE decryption engine to decrypt the incoming message. The decrypted message can be scanned for viruses and spam and delivered to the recipient. Outgoing email messages can also be processed. If indicated by message attributes or information provided by a message sender, an outgoing message can be encrypted using an IBE encryption engine and the IBE public key of a desired recipient.

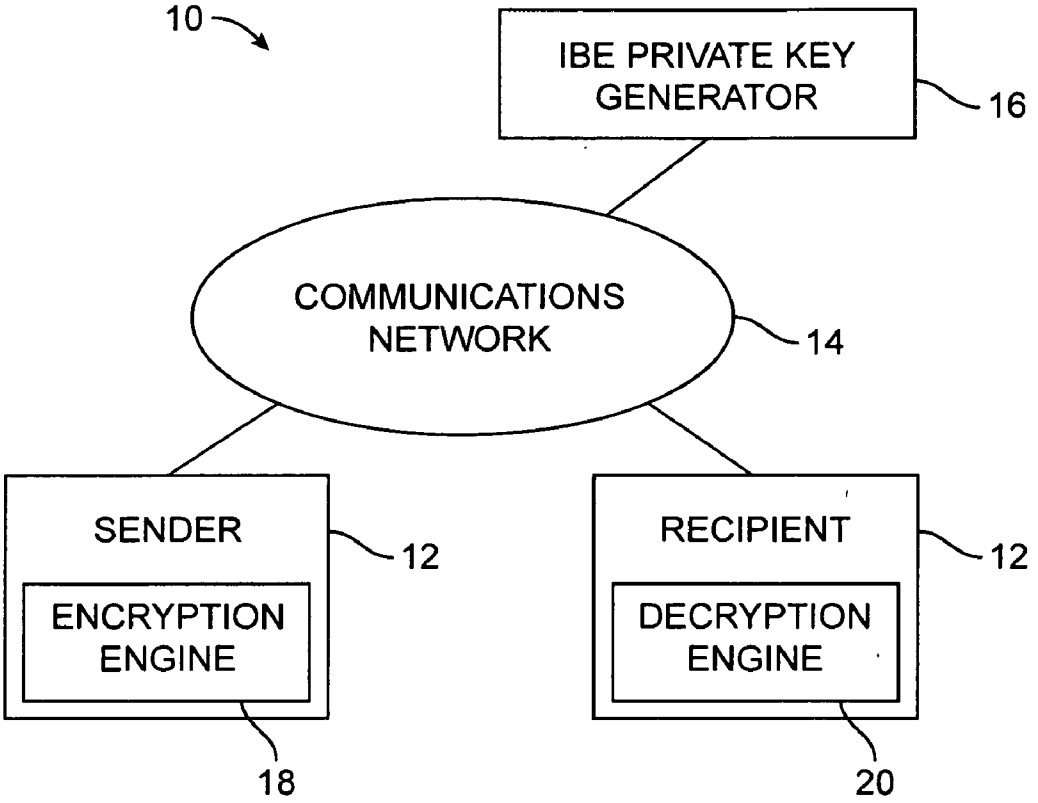

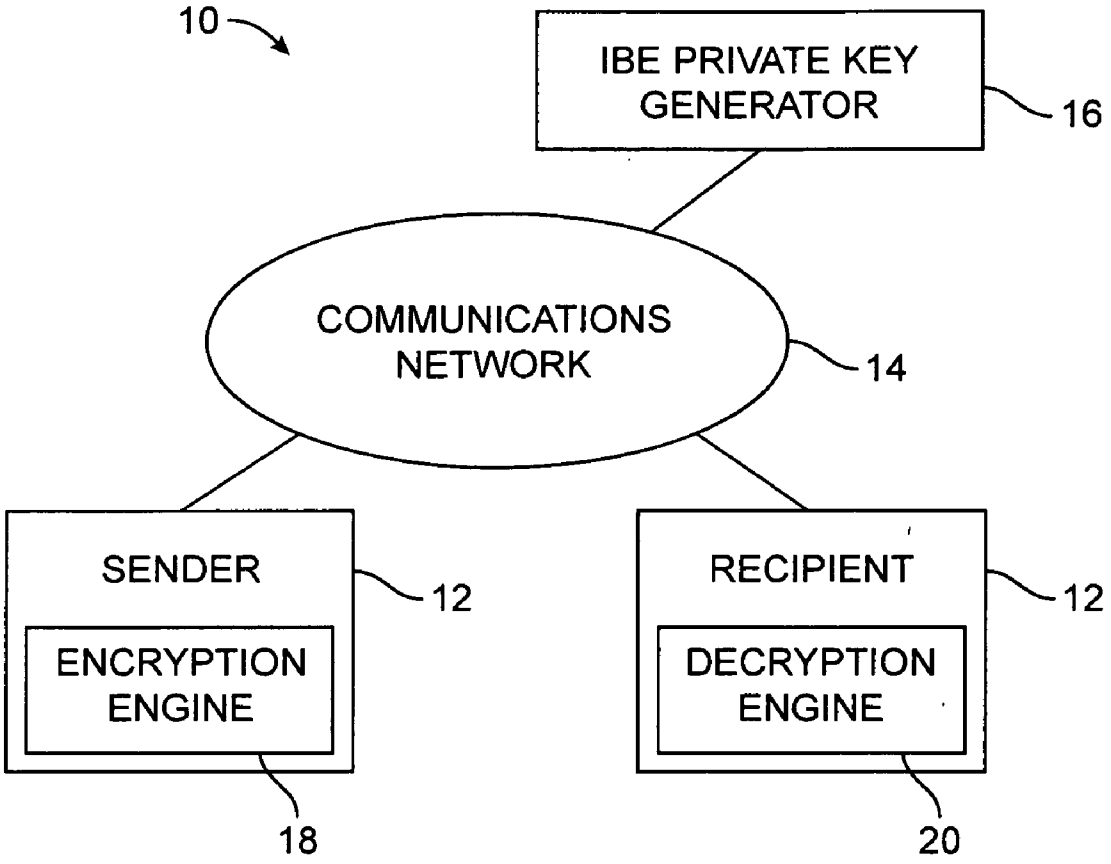
10
IBE PRIVATE KEY GENERATOR
16
COMMUNICATIONS NETWORK
14
SENDER
12
ENCRYPTION ENGINE
18
RECIPIENT
12
DECRYPTION ENGINE
20

FIG. 1

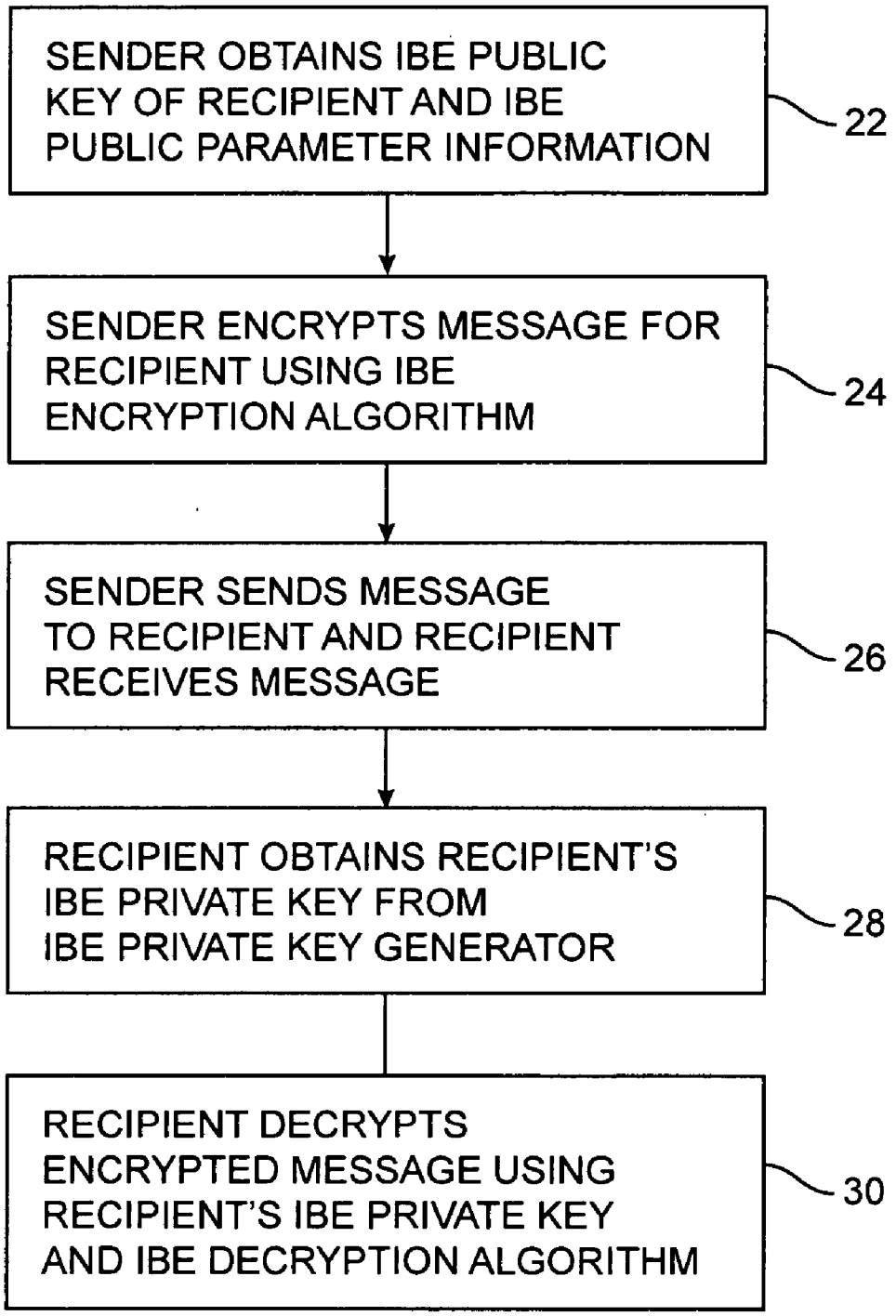
SENDER OBTAINS IBE PUBLIC KEY OF RECIPIENT AND IBE PUBLIC PARAMETER INFORMATION
22
SENDER ENCRYPTS MESSAGE FOR RECIPIENT USING IBE ENCRYPTION ALGORITHM
24
SENDER SENDS MESSAGE TO RECIPIENT AND RECIPIENT RECEIVES MESSAGE
26
RECIPIENT OBTAINS RECIPIENT'S IBE PRIVATE KEY FROM IBE PRIVATE KEY GENERATOR
28
RECIPIENT DECRYPTS ENCRYPTED MESSAGE USING RECIPIENT'S IBE PRIVATE KEY AND IBE DECRYPTION ALGORITHM
30

FIG. 2

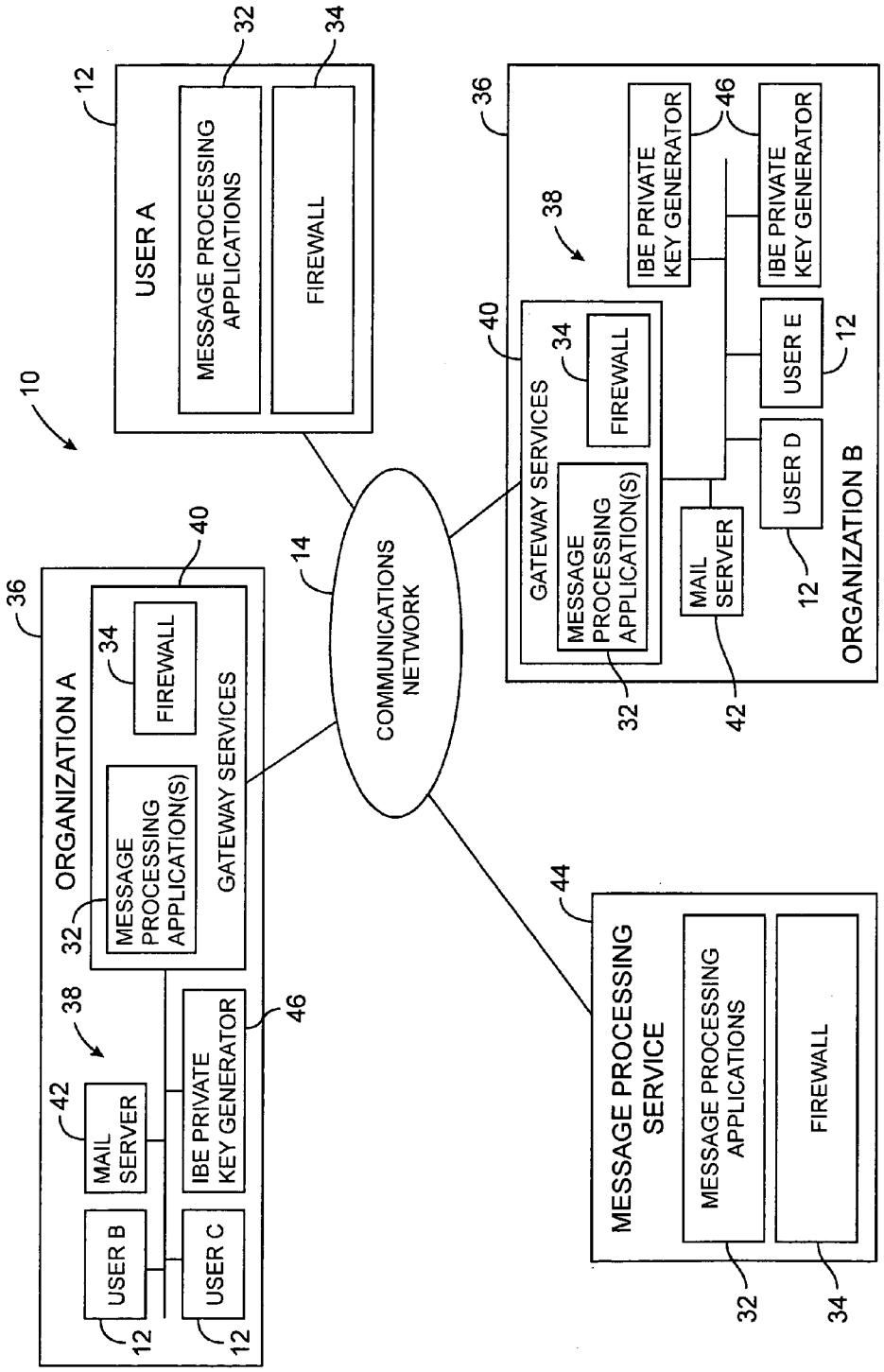
10
12
USER A
32
MESSAGE PROCESSING APPLICATIONS
34
FIREWALL
36
ORGANIZATION A
40
GATEWAY SERVICES
34
FIREWALL
32
MESSAGE PROCESSING APPLICATION(S)
38
42
MAIL SERVER
IBE PRIVATE KEY GENERATOR
46
USER B
12
USER C
12
14
COMMUNICATIONS NETWORK
36
ORGANIZATION B
38
IBE PRIVATE KEY GENERATOR
46
IBE PRIVATE KEY GENERATOR
40
GATEWAY SERVICES
34
FIREWALL
32
MESSAGE PROCESSING APPLICATION(S)
USER E
12
USER D
12
MAIL SERVER
42
44
MESSAGE PROCESSING SERVICE
32
MESSAGE PROCESSING APPLICATIONS
34
FIREWALL

FIG. 3

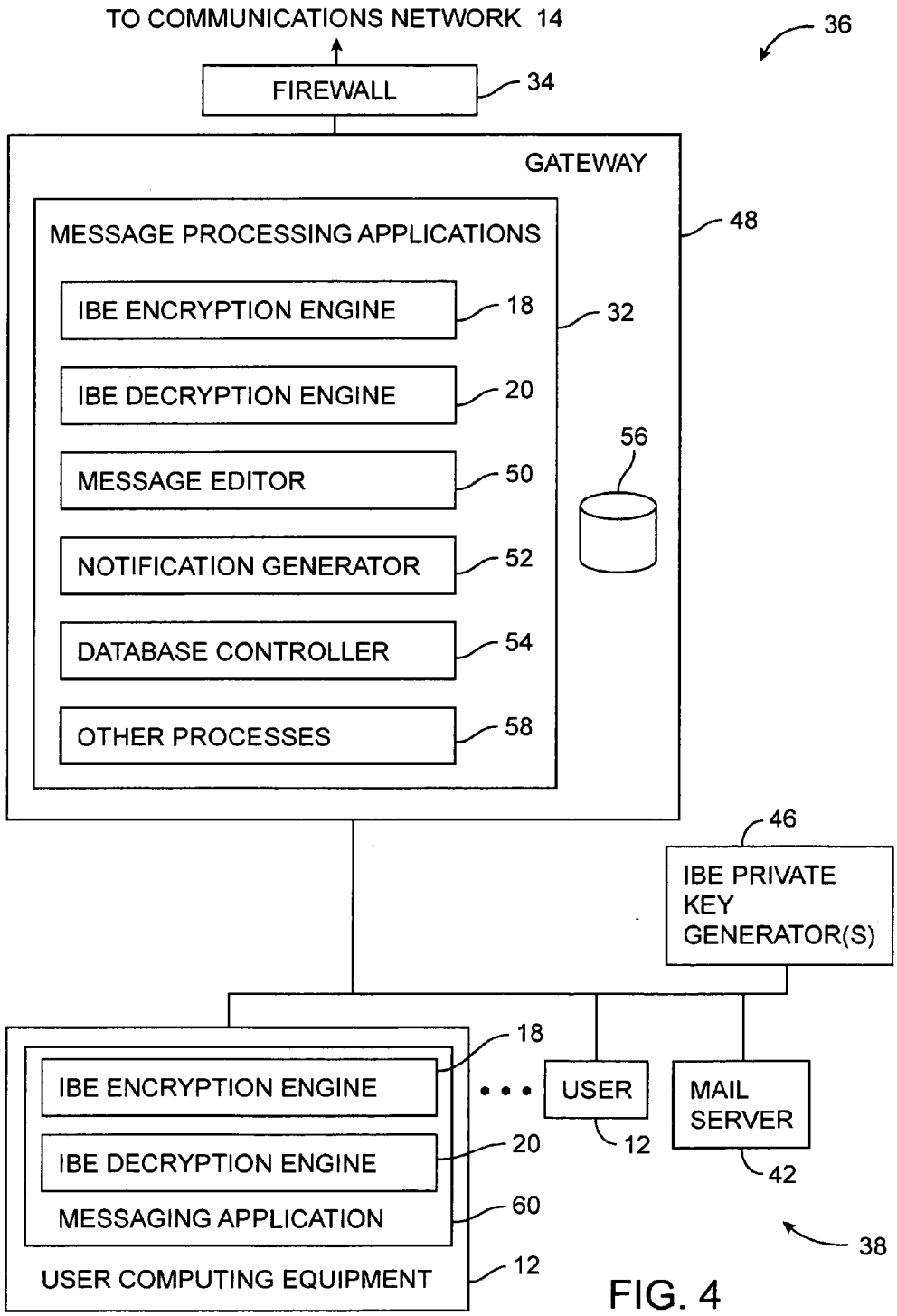
TO COMMUNICATIONS NETWORK 14
36
FIREWALL
34
GATEWAY
48
MESSAGE PROCESSING APPLICATIONS
IBE ENCRYPTION ENGINE
18
32
IBE DECRYPTION ENGINE
20
56
MESSAGE EDITOR
50
NOTIFICATION GENERATOR
52
DATABASE CONTROLLER
54
OTHER PROCESSES
58
46
IBE PRIVATE KEY GENERATOR(S)
18
IBE ENCRYPTION ENGINE
USER
MAIL SERVER
IBE DECRYPTION ENGINE
20
12
42
MESSAGING APPLICATION
60
38
USER COMPUTING EQUIPMENT
12

FIG. 4

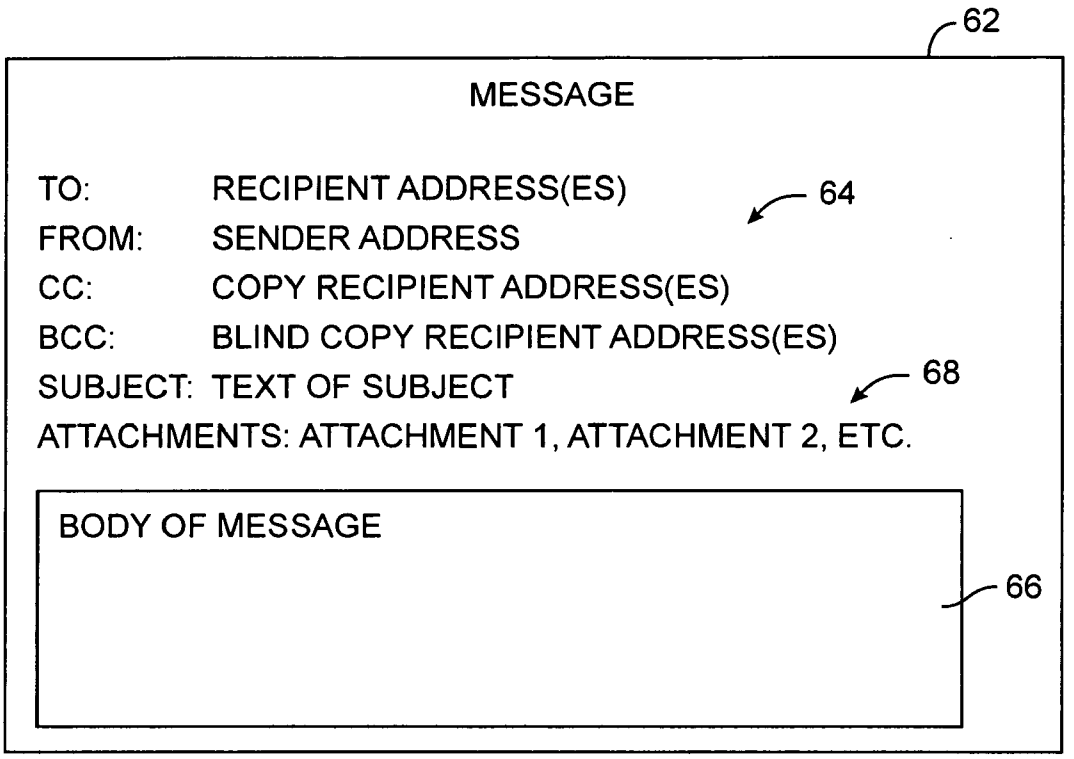
62
MESSAGE
TO: RECIPIENT ADDRESS(ES)
64
FROM: SENDER ADDRESS
CC: COPY RECIPIENT ADDRESS(ES)
BCC: BLIND COPY RECIPIENT ADDRESS(ES)
SUBJECT: TEXT OF SUBJECT
68
ATTACHMENTS: ATTACHMENT 1, ATTACHMENT 2, ETC.
BODY OF MESSAGE
66

FIG. 5

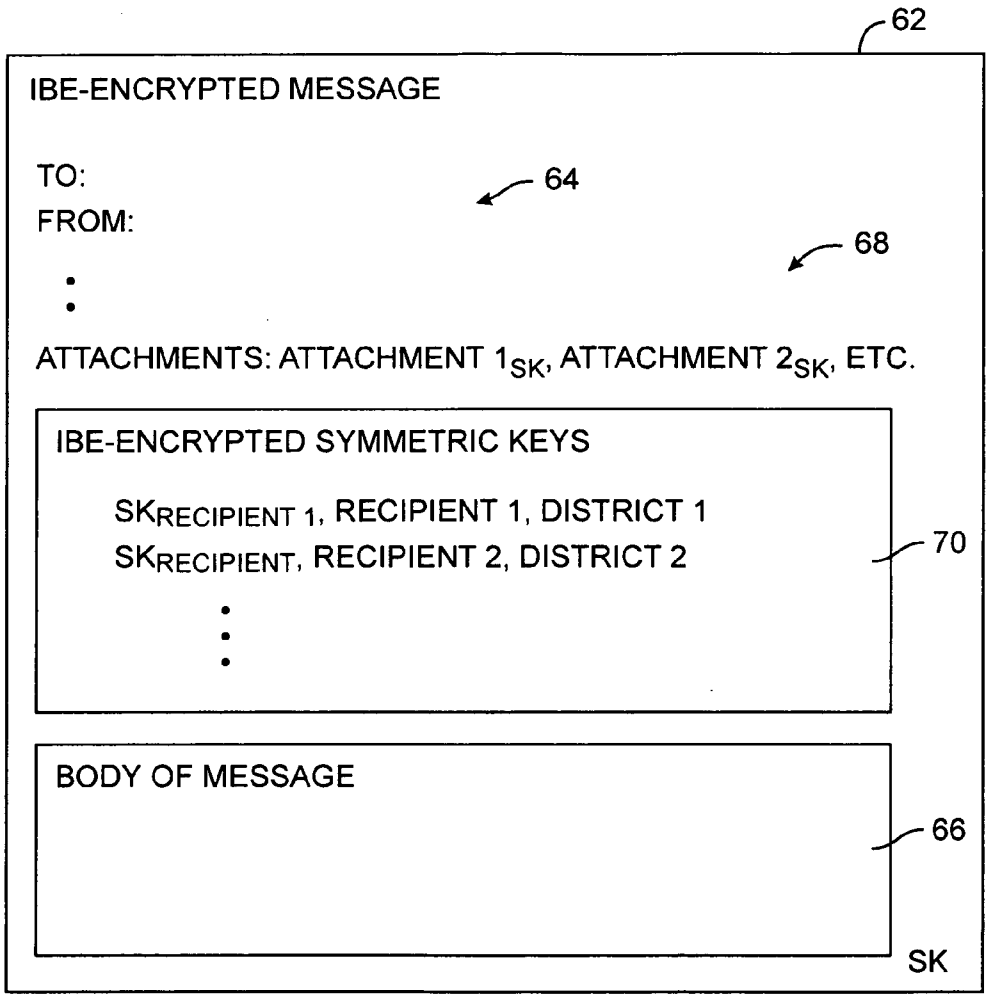
62
IBE-ENCRYPTED MESSAGE
TO:
64
FROM:
68
ATTACHMENTS: ATTACHMENT 1_{SK}, ATTACHMENT 2_{SK}, ETC.
IBE-ENCRYPTED SYMMETRIC KEYS
$SK_{RECIPIENT\ 1}$, RECIPIENT 1, DISTRICT 1
$SK_{RECIPIENT}$, RECIPIENT 2, DISTRICT 2
70
BODY OF MESSAGE
66
SK

FIG. 6

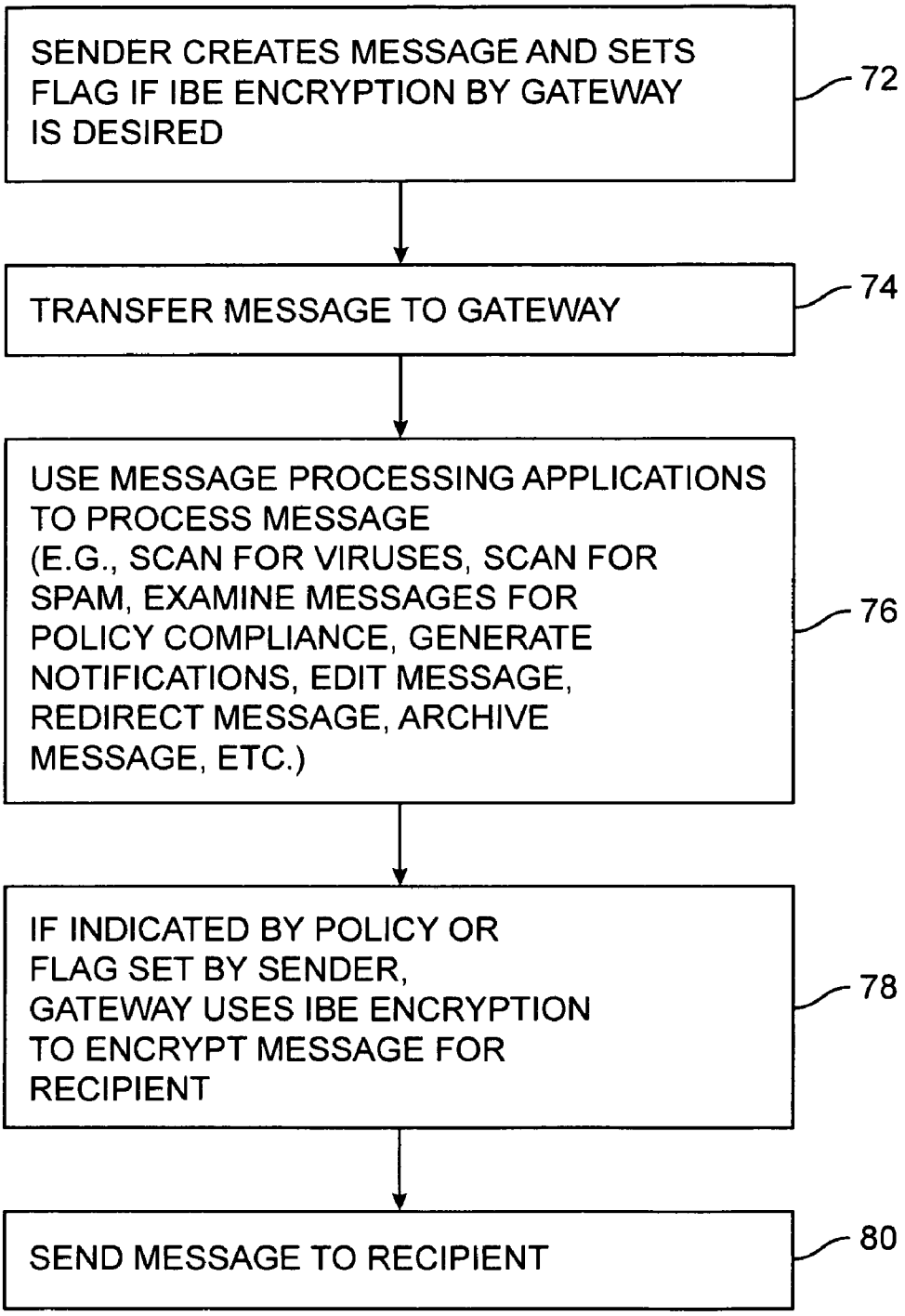
SENDER CREATES MESSAGE AND SETS FLAG IF IBE ENCRYPTION BY GATEWAY IS DESIRED
72
TRANSFER MESSAGE TO GATEWAY
74
USE MESSAGE PROCESSING APPLICATIONS TO PROCESS MESSAGE (E.G., SCAN FOR VIRUSES, SCAN FOR SPAM, EXAMINE MESSAGES FOR POLICY COMPLIANCE, GENERATE NOTIFICATIONS, EDIT MESSAGE, REDIRECT MESSAGE, ARCHIVE MESSAGE, ETC.)
76
IF INDICATED BY POLICY OR FLAG SET BY SENDER, GATEWAY USES IBE ENCRYPTION TO ENCRYPT MESSAGE FOR RECIPIENT
78
SEND MESSAGE TO RECIPIENT
80

FIG. 7

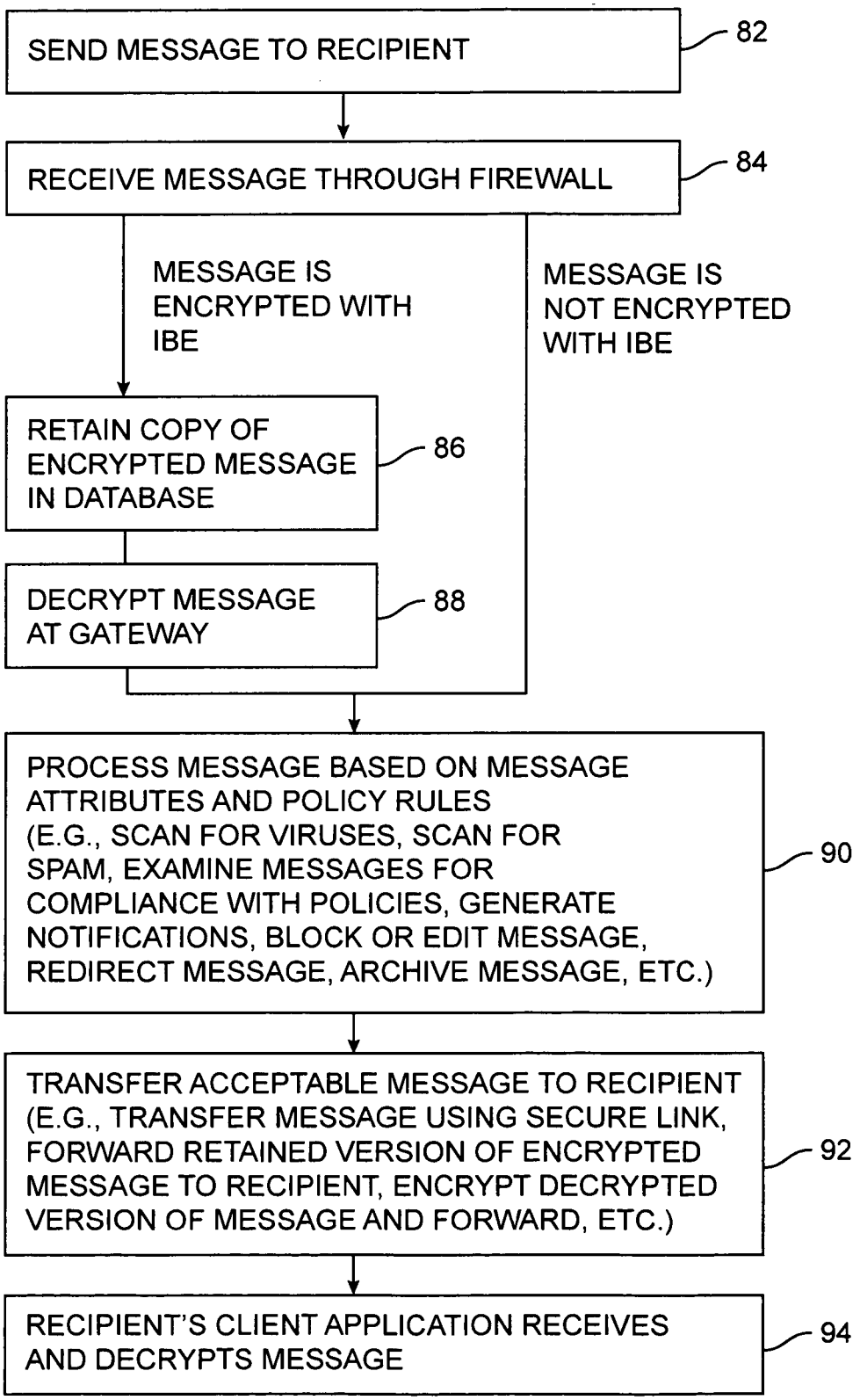
SEND MESSAGE TO RECIPIENT
82
RECEIVE MESSAGE THROUGH FIREWALL
84
MESSAGE IS ENCRYPTED WITH IBE
MESSAGE IS NOT ENCRYPTED WITH IBE
RETAIN COPY OF ENCRYPTED MESSAGE IN DATABASE
86
DECRYPT MESSAGE AT GATEWAY
88
PROCESS MESSAGE BASED ON MESSAGE ATTRIBUTES AND POLICY RULES (E.G., SCAN FOR VIRUSES, SCAN FOR SPAM, EXAMINE MESSAGES FOR COMPLIANCE WITH POLICIES, GENERATE NOTIFICATIONS, BLOCK OR EDIT MESSAGE, REDIRECT MESSAGE, ARCHIVE MESSAGE, ETC.)
90
TRANSFER ACCEPTABLE MESSAGE TO RECIPIENT (E.G., TRANSFER MESSAGE USING SECURE LINK, FORWARD RETAINED VERSION OF ENCRYPTED MESSAGE TO RECIPIENT, ENCRYPT DECRYPTED VERSION OF MESSAGE AND FORWARD, ETC.)
92
RECIPIENT'S CLIENT APPLICATION RECEIVES AND DECRYPTS MESSAGE
94

FIG. 8

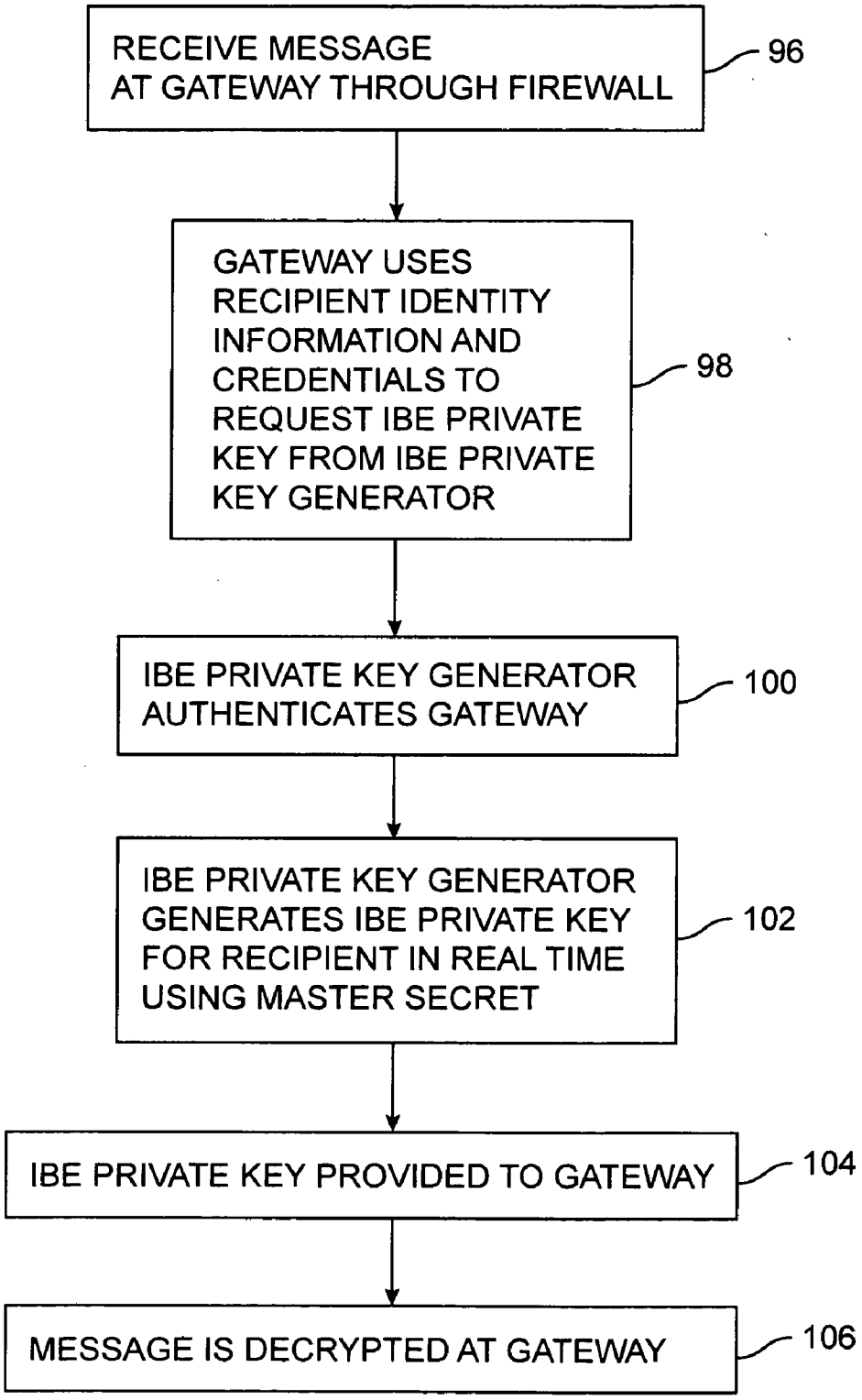
RECEIVE MESSAGE AT GATEWAY THROUGH FIREWALL
96
GATEWAY USES RECIPIENT IDENTITY INFORMATION AND CREDENTIALS TO REQUEST IBE PRIVATE KEY FROM IBE PRIVATE KEY GENERATOR
98
IBE PRIVATE KEY GENERATOR AUTHENTICATES GATEWAY
100
IBE PRIVATE KEY GENERATOR GENERATES IBE PRIVATE KEY FOR RECIPIENT IN REAL TIME USING MASTER SECRET
102
IBE PRIVATE KEY PROVIDED TO GATEWAY
104
MESSAGE IS DECRYPTED AT GATEWAY
106

FIG. 9

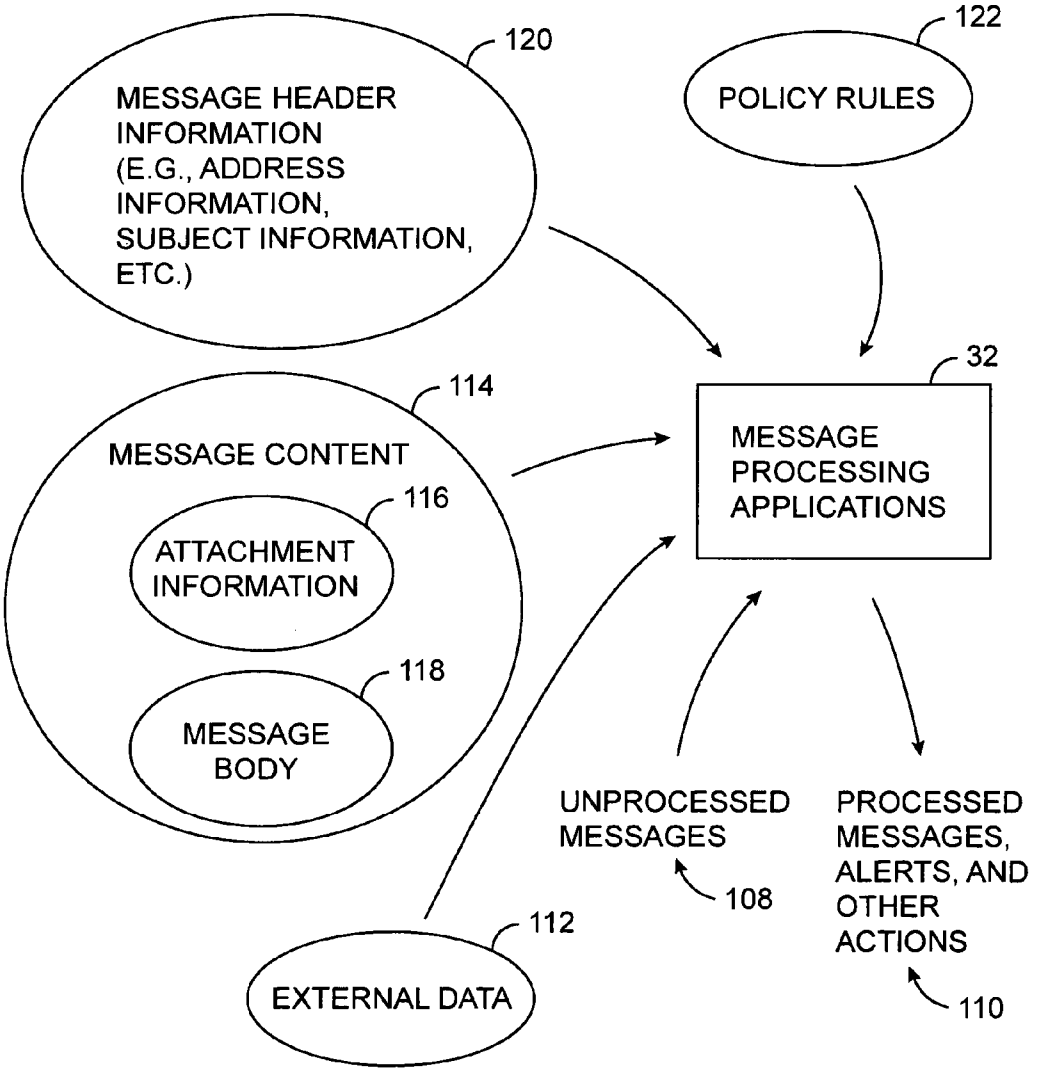
120
MESSAGE HEADER INFORMATION (E.G., ADDRESS INFORMATION, SUBJECT INFORMATION, ETC.)
122
POLICY RULES
32
MESSAGE PROCESSING APPLICATIONS
114
MESSAGE CONTENT
116
ATTACHMENT INFORMATION
118
MESSAGE BODY
UNPROCESSED MESSAGES
108
PROCESSED MESSAGES, ALERTS, AND OTHER ACTIONS
110
112
EXTERNAL DATA

FIG. 10

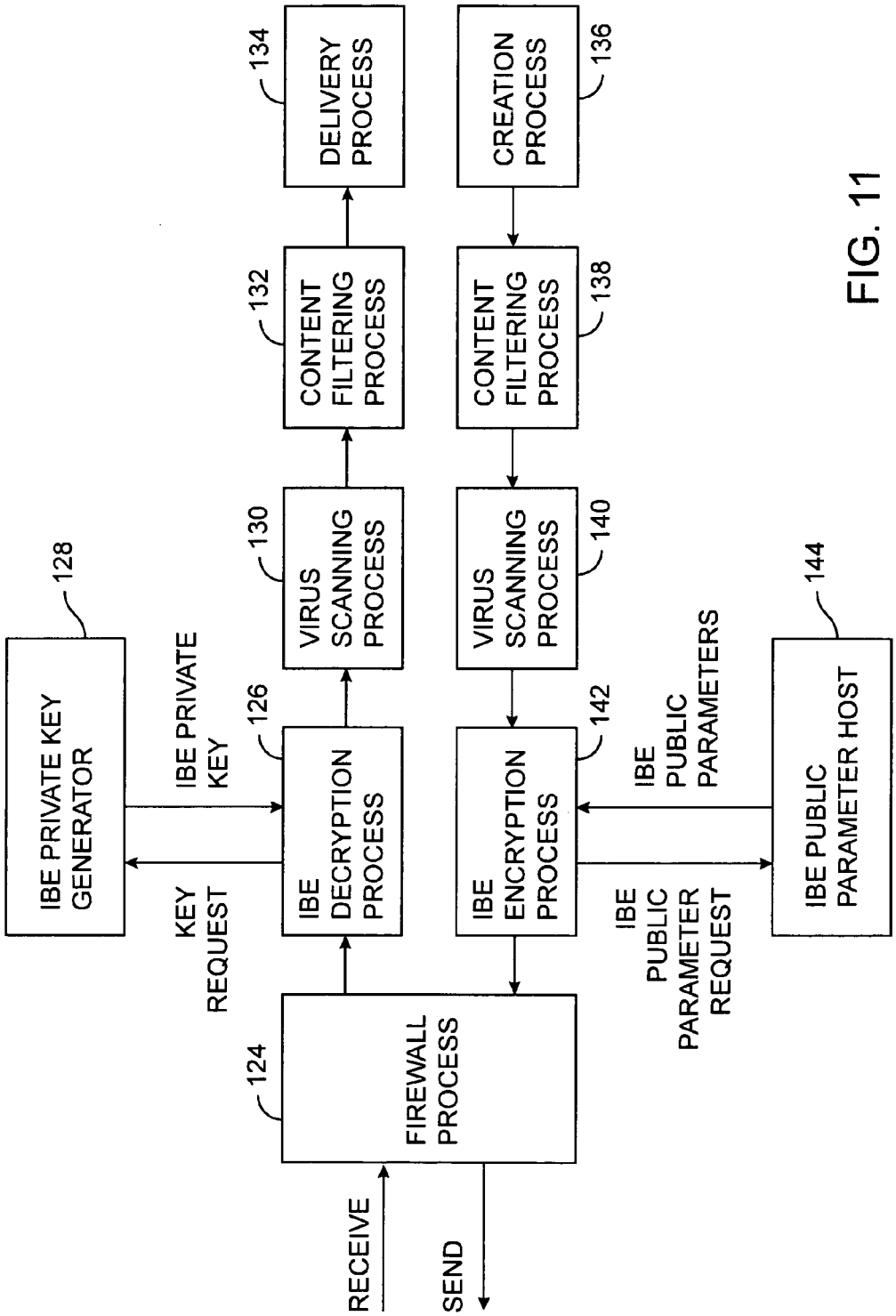
IBE PRIVATE KEY GENERATOR
128
IBE PRIVATE KEY
KEY REQUEST
IBE DECRYPTION PROCESS
126
VIRUS SCANNING PROCESS
130
CONTENT FILTERING PROCESS
132
DELIVERY PROCESS
134
FIREWALL PROCESS
124
RECEIVE
SEND
IBE ENCRYPTION PROCESS
142
VIRUS SCANNING PROCESS
140
CONTENT FILTERING PROCESS
138
CREATION PROCESS
136
IBE PUBLIC PARAMETERS
IBE PUBLIC PARAMETER REQUEST
IBE PUBLIC PARAMETER HOST
144

FIG. 11

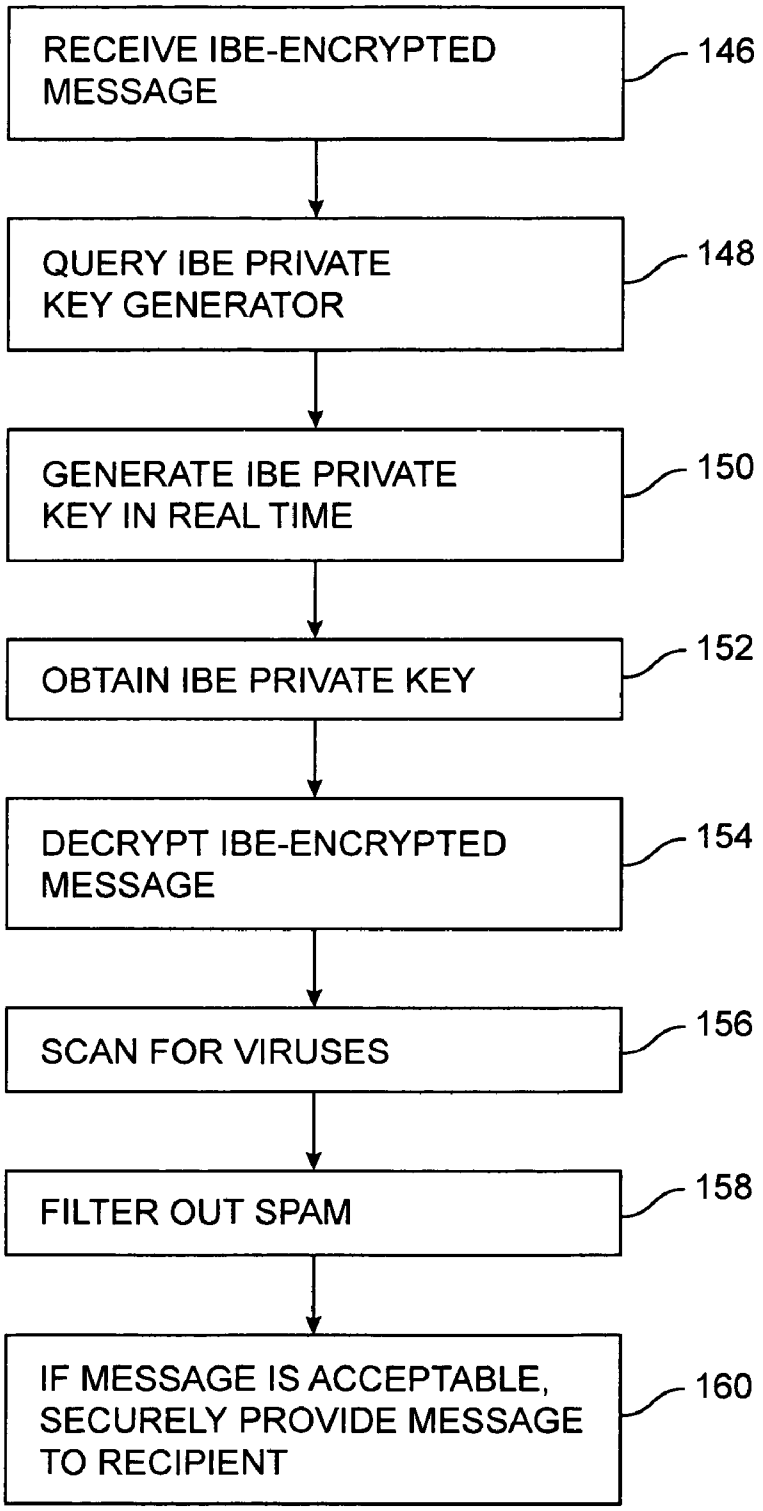
RECEIVE IBE-ENCRYPTED MESSAGE
146
QUERY IBE PRIVATE KEY GENERATOR
148
GENERATE IBE PRIVATE KEY IN REAL TIME
150
OBTAIN IBE PRIVATE KEY
152
DECRYPT IBE-ENCRYPTED MESSAGE
154
SCAN FOR VIRUSES
156
FILTER OUT SPAM
158
IF MESSAGE IS ACCEPTABLE, SECURELY PROVIDE MESSAGE TO RECIPIENT
160

FIG. 12

IDENTITY-BASED-ENCRYPTION MESSAGE MANAGEMENT SYSTEM

BACKGROUND OF THE INVENTION

[0001] This invention relates to systems for managing messages, and more particularly, to message management systems that have identity-based-encryption capabilities.

[0002] Software packages and remotely-hosted third-party services are available for blocking unsolicited commercial email (spam) and for scanning email for viruses. Many businesses use such software and services in managing their email systems. In a typical installation, a firewall may be used to protect the network of a business from attacks. Spam filtering and virus scanning software is used to examine email that passes through the firewall.

[0003] Because some email is encrypted, businesses may need to use software that is capable of handling both encrypted and unencrypted email messages.

[0004] A variety of cryptographic techniques are used to encrypt email messages. With symmetric key cryptographic systems, the sender of a message uses the same key to encrypt the message that the recipient of the message uses to decrypt the message. Symmetric-key systems require that each sender and recipient exchange a shared key in a secure manner.

[0005] With public-key cryptographic systems, two types of keys are used—public keys and private keys. Senders may encrypt messages using the public keys of the recipients. Each recipient has a private key that is used to decrypt the messages for that recipient.

[0006] One public-key cryptographic system that is in use is the RSA cryptographic system. Each user in this system has a unique public key and a unique private key. A sender may obtain the public key of a given recipient from a key server over the Internet. To ensure the authenticity of the public key and thereby defeat possible man-in-the-middle attacks, the public key may be provided to the sender with a certificate signed by a trusted certificate authority. The certificate may be used to verify that the public key belongs to the intended recipient of the sender's message. Public key encryption systems such as the RSA system that use this type of traditional approach are referred to herein as PKE cryptographic systems.

[0007] Identity-based-encryption (IBE) systems have also been proposed. As with PKE cryptographic systems, a sender in an IBE system may encrypt a message for a given recipient using the recipient's public key. The recipient may then decrypt the message using the recipient's corresponding private key. The recipient can obtain the private key from a private key generator associated with the recipient.

[0008] Unlike PKE schemes, IBE schemes generally do not require the sender to look up the recipient's public key. Rather, a sender in an IBE system may generate a given recipient's IBE public key based on known rules. For example, a message recipient's email address or other identity-based information may be used as the recipient's public key, so that a sender may create the IBE public key of a recipient by simply determining the recipient's email address.

[0009] It is an object of the present invention to provide message management systems with identity-based-encryption capabilities.

SUMMARY OF THE INVENTION

[0010] The present invention relates to message management systems with the ability to handle encrypted messages. The invention also relates to methods for using such systems to manage messages.

[0011] Message management functions may be provided by message processing applications. The message processing applications may run on gateway equipment at an organization, on a personal computer or other computing equipment operated by an individual, or on equipment at a third-party message management service to which an individual or organization can subscribe.

[0012] The message management applications may be used to scan email and other messages for viruses and to filter messages based on message content or other criteria. The message management applications can block spam, generate notifications, edit messages, perform archiving functions and message redirection, etc.

[0013] Messages may be encrypted using identity-based-encryption (IBE) schemes. Message processing applications may use IBE encryption and decryption engines to handle IBE message encryption and decryption.

[0014] An organization may have an internal network of users. A gateway may be used to connect the internal network to an external communications network such as the Internet. An IBE private key generator on the internal network may be used to provide IBE private keys to the gateway.

[0015] When the gateway receives an incoming message that has been encrypted using IBE, the gateway may request an appropriate IBE private key from the IBE private key generator. The IBE private key generator may verify that the gateway is authorized to receive the IBE private key, and, if the gateway is authorized, can generate the IBE private key in real time. The IBE private key may be provided to the gateway by the IBE private key generator over the internal network.

[0016] Message processing applications on the gateway can use an IBE decryption engine and the IBE private key to decrypt the IBE-encrypted message. The message processing applications may then process the unencrypted version of the message (e.g., for virus scanning, spam blocking, policy enforcement, etc.) and may provide the processed version of the message to an appropriate recipient within the organization.

[0017] Outgoing messages may also be processed by message processing applications on the gateway of an organization. For example, outgoing message may be scanned for spam or viruses, may be processed to enforce security policies and other policies, etc. Messages can be provided to the gateway from a sender in the organization over the organization's internal network. After the gateway has used the message processing applications to process an outgoing message, the message can be encrypted using an IBE encryption engine. The message processing application can encrypt all outgoing messages using IBE or can encrypt

messages that are determined to contain sensitive information, that are destined to a particular address, or that satisfy other policy criteria. If desired, a sender of a message may provide information to the gateway with an outgoing message or in a separate communication that indicates to the gateway that the message should be encrypted. When the message processing applications on the gateway detect this information from the sender, the IBE encryption engine may be used to encrypt the outgoing message.

[0018] Further features of the invention, its nature and various advantages will be more apparent from the accompanying drawings and the following detailed description of the preferred embodiments.

BRIEF DESCRIPTION OF THE DRAWINGS

[0019] **FIG. 1** is a diagram of an illustrative identity-based-encryption system in accordance with the present invention.

[0020] **FIG. 2** is a flow chart of illustrative steps involved in using identity-based-encryption techniques to support secure messaging in accordance with the present invention.

[0021] **FIG. 3** is a diagram of an illustrative identity-based encryption system with IBE message management capabilities in accordance with the present invention.

[0022] **FIG. 4** is a diagram showing illustrative message management system components that may be used at to provide IBE message management functions an organization in accordance with the present invention.

[0023] **FIG. 5** is a diagram of an illustrative unencrypted message.

[0024] **FIG. 6** is a diagram of the illustrative message of **FIG. 5** after IBE encryption in accordance with the present invention.

[0025] **FIG. 7** is a flow chart of illustrative steps involved in sending a message to a recipient through an IBE message management system at a sender's organization in accordance with the present invention.

[0026] **FIG. 8** is a flow chart of illustrative steps involved in receiving a message for a recipient at an organization with an IBE message management system in accordance with the present invention.

[0027] **FIG. 9** is a flow chart of illustrative steps involved in decryption of an IBE-encrypted message at the recipient's organization before performing message processing operations on the message in accordance with the present invention.

[0028] **FIG. 10** is a diagram showing how message processing applications may process messages based on message attributes and policy rules in accordance with the present invention.

[0029] **FIG. 11** is a diagram showing the operation of an illustrative IBE message management system with virus scanning and content filtering capabilities in accordance with the present invention.

[0030] **FIG. 12** is a flow chart of illustrative steps involved in using the system of **FIG. 11** to perform virus scanning and content filtering operations on IBE-encrypted messages in accordance with the present invention.

DETAILED DESCRIPTION OF THE PREFERRED EMBODIMENT

[0031] The present invention relates to message management systems with the ability to handle messages encrypted using identity-based encryption. The invention also relates to methods for using such systems.

[0032] Equipment of the type shown in **FIG. 1** may be used to support identity-based-encryption (IBE) techniques. A user in system **10** may send a secure message to one or more other users over a communications network **14**. A sender is a user who sends a message. A recipient is a user who receives a message.

[0033] The present invention is sometimes described in connection with system environments in which the sender is an individual who is associated with one organization, whereas the recipient is an individual associated with another organization. In general, however, individuals, organizations, parts of organizations, or any other suitable parties or entities may exchange messages:

[0034] Moreover, the messages that are carried by the system need not be email messages, although email messages are used as an example. The messages may be email messages, instant messages, or any other suitable electronically-conveyed message. Messages may include any digital information (e.g., text, graphics, audio, video, commands, executable code, data, etc.) that it is desired to convey electronically between senders and recipients.

[0035] Users may communicate with each other using equipment **12**. Equipment **12** may, for example, include computing equipment such as a personal computers, portable computers, workstations, mainframe computers, networked computers or terminals, handheld computers, or any other suitable electronic equipment. Multiple individuals or organizations may use the same device. For example, a group of workers in an office may share the use of a single computer terminal that is connected to a host computer in a local area network.

[0036] The equipment of **FIG. 1** may be interconnected by communications paths in communications network **14**. Network **14** may be, for example, the Internet, a local area network, a wide area network, the public switched telephone network, a virtual private network, a wired network, a wireless network, a network including dedicated leased lines, a network based on fiber-optic or cable paths or other wired or wireless paths, or a network formed using any other suitable network technology or a combination of such networks.

[0037] System **10** generally has multiple IBE private key generators **16**. Each IBE private key generator **16** may be associated with a different set of users. An IBE private key generator and its associated users is called a "district." In a typical scenario, a large organization may have multiple districts. For example, one district may be used for securing communications with members of the organization's sales force. Another district may be used for securing communications with the organization's managers. Districts need not be mutually exclusive. For example, a manager in the sales department may be a member of both of this organization's districts.

[0038] Various computing devices may be used with network **14** to support secure messaging features. For example,

computing equipment may be used to implement the functions of a server or other computer equipment at each IBE private key generator **16**. Servers may also be used to support the functions of an IBE public parameter directory, an IBE public parameter host, a certificate authority, mail servers, and other entities. Such servers may be co-located with a sender, may be connected to the network **14** as an independent third-party service, may be part of the infrastructure of network **14**, may be associated with a given recipient's organization, may be co-located with the recipient, private key generator, or other equipment, or may used at more than one of these locations. These are merely illustrative arrangements which need not be mutually exclusive.

[**0039**] A server may be formed using a single computer or multiple computers. Multiple servers may be implemented on one computer. If desired, the functions of a single server may be provided by computers that are distributed over a number of different physical locations. The functions implemented using servers in system **10** may generally be performed using other computer equipment configurations if desired, but the computing equipment for implementing these functions is sometimes referred to as a "server" or "servers" for clarity.

[**0040**] A sender may send a message to a given recipient over system **10** using any suitable messaging format. For example, an email message, an instant message (e.g., an AOL instant message, a Yahoo instant message, an MSN Messenger instant message, and ICQ instant message, an IBM/Lotus Sametime instant message, etc.), or other electronic message may be sent. For clarity, the present invention is generally described in the context of email messages. This is merely illustrative. Any suitable type of messages may be conveyed between senders and receivers if desired.

[**0041**] Some user activities in system **10**, such as sending person-to-person email messages, involve at least some manual intervention. For example, a person who desires to send a personally-composed text message must type the message before it is encrypted and sent to the appropriate recipient. Other user activities in system **10** may be entirely automated so that no human intervention is generally required. As one example, the user at one device **12** may be a banking institution that desires to use encrypted email communications to deliver encrypted bank statements to account holders at other devices **12** over communications network **14**. The statement preparation and distribution processes may be automated so that no operator intervention is generally needed at the banking institution's equipment once the system has been properly set up. User receipt of the statements may also be automated. System functions involved in presenting on-screen options for humans to respond to (e.g., by clicking on them using a computer mouse) can be automated using software running on the components of the system. Situations where a particular function may involve manual intervention or a computer-implemented operation will be clear from context in the following discussion.

[**0042**] During operation of system **10**, certain entities (e.g., private key generators such as private key generator **16**) may need to verify that a given party has permission to access the contents of a particular message or to perform certain functions. In general, the entity performing such authentication and authorization processes may use any suitable manual or automatic techniques. For example, a party may be asked to fax or mail a letter to an authenticating entity on the party's official letterhead, which is examined for authenticity by personnel or automated equipment at the authenticating entity. As another example, biometric identification techniques (e.g., fingerprint analysis, eye-scanning, handprint or voiceprint analysis, facial recognition methods, or in-person identification checks) may be used. Hardware-based arrangements (e.g., based on hardware tokens) may be used to establish identity. A user may provide credentials in the form of a pre-established user name and password. Certificate authorities may create digital certificates that help to verify the identities of certain parties. Digital signatures (e.g., signatures from a certificate authority or other entity that use PKE private keys and that can be verified using matching PKE public keys) may be used to ensure that a message or other signed information is associated with a particular party.

[**0043**] Sometimes authentication information and other information (in addition to the messages being sent from the senders to the recipients in system **10**) such as IBE public and private keys must be conveyed between parties securely (e.g., between a sender and a private key generator or between equipment associated with a recipient and a private key generator, etc.). A number of different approaches may be used to convey information in system **10** securely. For example, information may be conveyed securely over a secure communications path such as a communications path that uses the secure sockets layer protocol (SSL) or other suitable secure protocol (e.g., TLS), a communications path may be trusted because it is under the control of a trusted party (e.g., because the communications path is physically under the control of a trusted party), and information may be conveyed securely by encrypting the information (e.g., in a message) before sending it over an insecure (or secure) link.

[**0044**] The operation of system **10** may involve the use of traditional public-key-encryption cryptographic techniques such as used with RSA public-key cryptography. For example, the secure sockets layer protocol, which may be used to secure communications between parties when a web browser or other application is used, involves the use of certificates from trusted certificate authorities. Digital signatures can also be implemented using traditional public-key-encryption techniques. These traditional public key cryptographic techniques are referred to herein as "PKE" cryptographic techniques.

[**0045**] The operation of system **10** also uses identity-based-encryption (IBE) cryptographic techniques. These cryptographic techniques are referred to herein as "IBE" cryptographic techniques.

[**0046**] PKE and IBE encryption schemes use an asymmetric approach. Some information (so-called public key information) is used to encrypt data. Other corresponding information (so-called private key information) is used to decrypt the encrypted data.

[**0047**] To enhance the efficiency of the IBE decryption and encryption processes, "two-step" decryption techniques may be used in which a message key (e.g., a symmetric message key) is used to encrypt the contents of a message prior to transmission to the recipient. The IBE process may then be used to encrypt the symmetric message key. The

message that is sent from the sender to the recipient contains the IBE-encrypted message key and the message-key-encrypted message contents. At the recipient, the recipient can use the IBE private key to decrypt the message key. The message key may then be used by the recipient to decrypt the rest of the message. These two-step processes may be more efficient than "pure" or "single step" IBE encryption algorithms in which the IBE algorithm alone is used to encrypt the entire message. Both types of approaches (and analogous multi-layer IBE encryption approaches) are generally referred to herein as simply "IBE" schemes for clarity.

[0048] IBE encryption schemes can be implemented using a number of different cryptographic algorithms. One such scheme is based on quadratic residues (see, e.g., "An Identity Based Encryption Scheme Based on Quadratic Residues," Eighth IMA International Conference on Cryptography and Coding, December 2001, Royal Agricultural College, Cirencester, UK, by Clifford Cocks). Another suitable scheme is based on elliptic curves (see, e.g., "Identity-Based Encryption from the Weil Pairing," by Dan Boneh and Matthew Franklin, extended abstract in Advances in Cryptology—Crypto 2001, Lecture Notes in Computer Science, Vol. 2139, Springer-Verlag, pp. 231-229, August 2001). See also http://eprint.iacr.org/2001/090 by Dan Boneh and Matthew Franklin. With the approach described in the work of Boneh and Franklin, IBE encryption is based on the properties of bilinear maps such as a Weil Pairing or Tate Paring. For clarity, aspects of the present invention will sometimes be described in the context of an identity-based-encryption scheme such as the elliptic curve implementation described by Boneh and Franklin. This is, however, merely illustrative. Any suitable approach for IBE encryption may be used with system **10** if desired.

[0049] Initially, when the system is set up, IBE private key generators (e.g., IBE private key generators such as IBE private key generator **16** of **FIG. 1**) each obtain or generate a master secret s. For example, each private key generator may create a master secret from a number that is randomly generated at the private key generator by a processor housed inside a tamper-proof enclosure. The master secret may also be produced off-site and delivered to the private key generator **16**.

[0050] The master secret (also sometimes referred to as a secret master key or a master key) is secret information that is used by the private key generator **16** to generate private keys. In an environment in which a message may be encrypted to a particular individual recipient, the recipient's private key can be used to decrypt the encrypted message. In an environment in which a message is encrypted to an associated entity (e.g., the recipient's organization), the private key associated with the organization can be used to decrypt the message.

[0051] After the master secret s has been obtained, the private key generator may use the master secret in generating IBE public parameter information. In the identity-based encryption approach of the above-mentioned work of Boneh et al., the public parameter information that is generated includes public parameters P and sP. The parameter P may first be generated by the IBE private key generator (e.g., using a random number generator). The parameter sP may then be generated by the IBE private key generator. The "multiplication" of s by P in the Boneh and Franklin work is accomplished using the multiplication of integers with points on elliptic curves. While multiplication (calculating sP) is straightforward, the inverse operation (determining s from knowledge of P and sP) is so computationally expensive that it is impractical for an attacker to obtain s in this way.

[0052] The IBE public parameter information (e.g., the parameters P and sP in an identity-based encryption process based on elliptic curves) may be numbers. In general, there is an equivalency between numbers, letters, symbols, and other such schemes for representing information. Sometimes certain information (e.g., the master secret or public parameters) will be described as being in number form and sometimes certain information (e.g., a user's identity) may be described as being at least partly in character form (e.g., in the form of an email address). Because of the inherent equivalency between these different representational schemes, the techniques involved in converting letters or symbols into numbers or for representing multiple numbers or strings as a single number or other such operations are not described in detail herein.

[0053] After the public parameter information (e.g., P and sP) has been determined, the IBE private key generator **16** may make this information available to senders in system **10**. The public parameter information may be provided to the senders using any suitable technique. For example, recipients may send the public parameter information to senders in email messages or use other suitable peer-to-peer distribution schemes. If desired, the private key generator **16** may publish the public parameter information by using a directory service or by placing the public parameter information on a particular host server that a sender can reach using an associated domain name or other suitable service name that is generated based on the recipient's public key (e.g., using a known service-name generation rule). These are merely illustrative techniques for making the public parameter information available to users in system **10**. Any suitable technique for making the public parameter information available to the users may be used if desired.

[0054] If the public parameter information includes more than one parameter, the parameters may be provided to the users together or separately. For example, parameters P and sP may be provided to a user together in a single transmission or separately in two transmissions. If parameters P and sP are provided separately, each parameter may be distributed using a different distribution mechanism. For example, P may be provided to a user over a secure sockets layer path and sP may be conveyed to the user in an encrypted email message. As another example, all users may know P in advance (e.g., P may be built into user software) and sP may be distributed electronically. If desired, P may be the same for all or substantially all users in the system. Moreover, P and sP may be combined to form the equivalent of a single number or parameter or may be subdivided (e.g., to form three or more public parameter sub-parts). If desired, some of the public parameter information may be distributed manually (e.g., by printed mail or by distributing a diskette or other computer-readable media to the user).

[0055] Once the public parameter information (e.g., public parameters P and sP) has been provided to a user (i.e., a sender) who desires to send an encrypted message to another user (i.e., a recipient), the sender may encrypt and send the

message to the recipient. An IBE encryption engine **18** implemented on the sender's equipment may be used to encrypt the message. The IBE encryption engine **18** may use the public parameter information (e.g., P and sP) and an appropriate IBE public key to encrypt the message. For example, the IBE encryption engine may encrypt the message using the IBE public key associated with the recipient.

[**0056**] When the IBE-encrypted message is received, the IBE private key that corresponds to the IBE public key is used to decrypt the message. The IBE private key is generated by the IBE private key generator **16**. An IBE decryption engine may be used to decrypt the IBE-encrypted message. The IBE decryption engine takes as inputs the IBE-encrypted message and the IBE private key and produces the unencrypted version of the message as an output. In the illustrative configuration of **FIG. 1**, an IBE decryption engine **20** is shown as being located at the recipient **12**. As described in more detail below, when the recipient is associated with an organization, the organization may have a gateway that uses decryption engine **20** to decrypt IBE-encrypted messages before performing message processing functions such as virus scanning and spam filtering. The decrypted message may then be securely provided to the recipient (e.g., by re-encrypting the message using IBE or other suitable encryption scheme, by forwarding a retained copy of the original IBE-encrypted message, by transmitting the message to the recipient over a secure path, etc.)

[**0057**] The IBE encryption engine **18** and decryption engine **20** may use software to implement the desired IBE encryption and decryption algorithms. Engines **18** and **20** may be provided to equipment in the system as part of the software applications used by senders and recipients (e.g., email messaging software), as part of the message management software provided to organizations in system **10**, as a downloadable program or plug-in that is available to senders, recipients, and organizations in system **10**, or using any other suitable technique.

[**0058**] Identity-based encryption (IBE) is so named because the encryption process at the sender uses an IBE public key Q that is generally based on the recipient's identity. The identity of a user in an IBE encryption scheme may be represented by any suitable string, number, or symbol. For example, the identity of a message recipient may be represented by or based on that recipient's email address, name, or social security number. An advantage of using IBE encryption is that a sender can generally determine the identity (e.g., the email address) of an intended recipient without the complexities that would be involved in obtaining the PKE public key of the intended recipient with traditional PKE schemes such as the RSA cryptographic scheme. For example, the IBE public keys may be the same as or based on user email addresses, which are readily obtainable.

[**0059**] Each IBE private key generator generally has multiple associated users. An IBE private key generator may generate an IBE private key for each of its associated users based on the IBE public keys (the Q's) of each of these users (e.g., based on the users' identities).

[**0060**] The form of IBE public key Q that is used for a given IBE scheme depends on the security features that are desired. For example, user privileges may be made to automatically expire by automatically concatenating a validity period (e.g., a date or date range such as the current day of the year and year, the current month, starting and ending dates such as Jan. 1, 2003-Jan. 10, 2003, or any other suitable time-related date-stamp information) with each user's email address to form Q values based not only on the users' identities (i.e., email addresses) but also validity period information. The validity period acts as an access policy for the encrypted message that is more generally applicable than the user-specific email address identity information.

[**0061**] When a validity period is used as part of an IBE public key Q, it is not permissible to access the contents of a message encrypted using that Q if the current date does not fall within the specified validity period. This policy may be enforced by the private key generators. If the current date is not within the validity period specified in the public key, a private key generator will refuse to generate and provide an otherwise authorized key requester (e.g., a message recipient or authorized agent for the message recipient) with a copy of the corresponding private key that is needed to decrypt the message. With this approach, private keys do not have unlimited lifetimes, which enhances the security of the system.

[**0062**] As another example, users' privileges may be restricted based on security clearance level. With this approach, security clearance level information may be concatenated or otherwise added to each user's email address when forming the public keys Q (i.e., Q=joe@navy.com|top_secret, etc.). These approaches are merely illustrative of the ways in which policy-based criteria may be added to a user identity such as a user email address when forming the IBE public key for each user (e.g., the Q for each user). Any suitable approach for forming IBE public keys based on user identity information and additional criteria may be used if desired.

[**0063**] A sender may send an IBE-encrypted message to multiple recipients. For example, a sender may send a message to a list of distinct email addresses, each associated with a different recipient each of which has a different IBE private key. In this type of scenario, the sender encrypts the message sent to each recipient differently (i.e., using the appropriate IBE public key for each intended recipient).

[**0064**] A sender desiring to send an IBE-encrypted message should have information sufficient to construct the IBE public key Q of the intended message recipient. This information may include information on an individual recipient's identity (e.g., an email address), information on how to construct the IBE public key Q from suitable access policy information (e.g., validity period, security level, subscription level, content rating, geographic region, etc.), or any other suitable identity information and/or generally-applicable access policy information that specifies which parties are allowed to access the contents of the message and under what conditions such access is permitted.

[**0065**] The sender must also obtain the public parameter information (e.g., P and sP) associated with the intended recipient of the message prior to message transmission.

[**0066**] Once the sender has the IBE public key of the recipient and the appropriate corresponding public parameter information, the sender may use the IBE encryption process (e.g., the process of the work of Boneh and Franklin

described above) to encrypt the message contents for the recipient. The IBE process may be implemented using software at the sender's equipment such as IBE encryption engine **18**. The encryption engine **18** may be a stand-alone process or application or may be incorporated into another process or application (e.g., as part of an email application, as a function in an operation system, in a virus scanning or spam-blocking application, as part of a firewall, etc.). A user process or application (whether stand-alone or multi-function) that uses IBE for message encryption may be referred to as a user's "client" software or "client." The IBE encryption engine **18** may take as inputs (1) the message to be encrypted, (2) the IBE public parameter information (e.g., P and sP), and (3) the IBE public key Q. The IBE process implemented using the IBE encryption engine **18** produces an encrypted version of the message as its output.

[**0067**] A sender may transmit an IBE-encrypted message to a recipient using an email program or other suitable software. After the sender transmits the IBE-encrypted message to the recipient over communications network **14**, the recipient may receive the message. The recipient may decrypt the received message using an appropriate IBE private key. The recipient may use decryption engine **20** to decrypt the message. The IBE private key that is used for decrypting the message is related to the IBE public key Q and public parameter information (e.g., P and sP) used when encrypting the message. Only the IBE private key that matches the IBE public key that was used to encrypt the message may be used to decrypt the message. Generation of the IBE private key requires knowledge of the master secret s, so only the appropriate private key generator **16** can generate the recipient's IBE private key based on the recipient's IBE public key Q.

[**0068**] With one suitable approach, the IBE private key for the recipient may be generated from the recipient's IBE public key Q and the master secret s by using an appropriate mathematical function (e.g., the multiplication of integers with points on elliptic curves) to calculate the value of sQ.

[**0069**] A recipient's authorization to access the contents of a message may be verified using authentication information (credentials) from the recipient and using other information (e.g., independently-gathered information on the current date). The private key generator **16** may use the access policy embodied in the IBE public key (in conjunction with optional additional policy criteria) to determine whether a given recipient is authorized. Once the IBE private key generator **16** verifies that the recipient is authorized to access the message contents, the private key may be generated and issued to the recipient by the IBE private key generator **16**.

[**0070**] If desired, the IBE private key generator **16** and the recipient may use intermediate parties as agents during the process of providing recipient credentials, verifying the recipient's authorization to access the message content, and providing the IBE private key. Any suitable manual or automatic authentication technique may be used by the IBE private key generator **16** to verify that the recipient (or the recipient's agent) is authorized to receive the IBE private key prior to issuing the recipient's private key.

[**0071**] Regardless of how the IBE private key generator **16** determines that the recipient is authorized to obtain the IBE private key, the private key should be provided to the recipient or an appropriate agent of the recipient for use in decrypting the message. Any suitable technique may be used to provide the IBE private key to the recipient or agent. For example, the private key may be transmitted to the recipient or agent in an email or other suitable message or may be made available for downloading over the Internet or a local area network (as part of a stand-alone downloadable application or a downloadable plug-in module, as a stand-alone key, etc.). A secure communications channel may be used for electronic communications between the IBE private key generator **16** and the recipient's or agent's equipment. If desired, an IBE private key may be preinstalled, so that the private key will be available for the recipient or agent when the recipient or agent first uses IBE. The private key may also be distributed by mail or courier (e.g., on a computer-readable medium such as a computer disk or memory chip).

[**0072**] The recipient or recipient's agent may, if desired, store the private key locally (e.g., in a cache or database on a storage device such as a memory circuit or hard drive on the recipient's equipment). If the private key is stored locally (and has not expired or otherwise become obsolete), the recipient or agent can retrieve it the next time a message needs to be decrypted without contacting the IBE private key generator **16** to obtain a new copy of the IBE private key over the communications network.

[**0073**] The IBE private key need not be stored. If the private key is not stored locally, the recipient or agent need not manage a cache or database of keys, which may help to reduce system complexity. The recipient or agent will also be assured that a valid current version of the IBE private key will be generated in real time by the IBE private key generator when a key request is fulfilled. In systems in which Q's are based on both identity information and validity-period or other date-sensitive information, the value of Q for a given recipient is continually being updated as the date and time change. Generation of private keys sQ in real time therefore helps to ensure that the correct up-to-date version of Q is used to form the IBE private key sQ.

[**0074**] The sender or the sender's agent may cache public parameter information on the sender's equipment (or on equipment at an agent of the sender) or may obtain the IBE public parameter information in real time.

[**0075**] Illustrative steps involved in using IBE-encryption to convey a secure message from a sender to a recipient in system **10** are shown in **FIG. 2**. At step **22**, the sender (or sender's agent) may obtain the IBE public key Q of the intended recipient and the associated IBE public parameter information (e.g., parameters P and sP). The IBE public key Q may be obtained from a source that has a copy of the appropriate IBE public key Q or may be generated based on known rules (e.g., by obtaining the recipient's email address or other identity information, by determining a suitable validity period or other generally-applicable access policy information, and by using this information to generate Q). The IBE public parameter information may be obtained from the recipient or other suitable party, may be obtained over network **14** from a directory service (e.g., a directory service implemented on a server connected to network **14**), or may be obtained over network **14** from a host associated with the IBE private key generator **16** that generated the public parameter information. The IBE public key Q and IBE public parameter information may be cached locally by the sender for later retrieval if desired. If desired, Q may be

generated in real time. For example, Q may be generated in real time to incorporate up-to-date validity period information into Q in addition to identity information such as recipient email address information.

[0076] At step **24**, the sender or sender's agent may use IBE encryption engine **18** (**FIG. 1**) to encrypt a message for the recipient.

[0077] The IBE-encrypted message may be sent to the recipient over network **14** and received by the recipient at step **26**. The message may be accompanied by information on the IBE public key Q that was used to encrypt the message. This information may be used by the recipient or recipient's agent in determining which private key generator **16** to contact at step **28** and which private key to request to decrypt the message.

[0078] To obtain the IBE private key from the private key generator at step **28**, the recipient or recipient's agent may provide information on Q (e.g., Q, a precursor of Q, or a derivative of Q) to the private key generator that the private key generator can use to determine which private key is being requested (and which access policies apply). The recipient or recipient's agent can provide the private key generator with recipient credentials such as username and password information, biometric information, age information, and other suitable identity and authentication information that the private key generator **16** may use to verify that the recipient or recipient's agent is authorized to obtain the requested IBE private key.

[0079] If desired, certain access policies may be implicit. Moreover, the private key generator may use its own information (e.g., information on the current time and date) as well as information provided by the recipient or recipient's agent in determining whether or not a given recipient or agent is authorized to obtain the IBE private key. During the authentication process, the recipient, agent, and the IBE private key generator may communicate using secure communications (e.g., using PKE-encrypted messages, a trusted communications path, a secure communications link such as an SSL or TLS link, etc.).

[0080] When the private key generator **16** determines that the recipient or agent is authorized to obtain a copy of the IBE private key, the IBE private key may be generated and provided to the recipient or agent securely at step **28** (e.g., in a secure message or over a secure communications link in network **14**).

[0081] At step **30**, after the recipient or agent has obtained the appropriate IBE private key, the recipient or agent may use this private key with decryption engine **20** (**FIG. 1**) to decrypt the encrypted message. If the recipient's agent decrypts the message, the recipient's agent can securely provide the unencrypted version of the message to the recipient (e.g., over a secure or trusted link) or can re-encrypt the message or retrieve a temporarily-stored encrypted version of the message and transmit it to the recipient in encrypted form for decryption by the recipient.

[0082] Whenever computer equipment is connected to an open network such as the Internet, there is a risk of infection by computer viruses and attacks by unauthorized users. Email systems are susceptible to unwanted commercial solicitations (spam). Sometimes security and policy issues are raised when members of an organization try to send unencrypted messages containing sensitive information or try to access potentially objectionable content over the Internet. These problems can be addressed using tools such as firewalls, web browser filtering software, and mail processing services.

[0083] For example, a content filter for a web browser may be used to prevent access to web pages containing undesirable content. The content filter may examine web pages for potentially objectionable text. If potentially objectionable text is located in a web page requested by a user's web browser, the filter can prevent the user's browser from displaying the requested page.

[0084] Firewalls can block access to a computer or network based on access rules. For example, a firewall can be used to prevent passage of Internet Protocol (IP) packets into an organization's network unless the headers of those packets contain port and destination address information that matches a predetermined port and destination address (e.g., the port and destination address associated with the organization's mail server). Firewalls can be used to restrict both incoming and outgoing traffic.

[0085] Message processing applications can be used to enforce email policies. As an example, a virus scanning message processing application may scan incoming and/or outgoing email messages for viruses. This type of message processing application may examine email for attachments containing executable code or executable code with particular properties. A spam-filtering message processing application may block undesirable unsolicited commercial email messages based on message header information such as subject-line information, sender address information, or other message content or attributes. An email policy-enforcement message processing application may enforce email security policies. For example, such a message processing application may block certain unencrypted outgoing messages when those messages are sent to particular recipients, are sent by certain senders, or contain sensitive information.

[0086] The message management functions of these various types of message processing applications can be provided using a single message processing application or multiple message processing applications. These functions can be provided using any type of software process (i.e., application-level software and/or functions provided by a computer operating system) running on any type of computing equipment or hardware. For clarity, message processing application functions are generally described as being provided by "mail processing applications" or "message processing applications." This is, however, merely illustrative. Any suitable software implemented on any suitable computing equipment platform may be used to provided these services if desired.

[0087] A diagram showing how message processing applications **32** may be used in system **10** is shown in **FIG. 3**. A user who is not associated with a particular organization (i.e., user A) may have a firewall **34** and message processing applications **32** such as antivirus and antispam software applications running on a personal computer or other suitable computing equipment **12**.

[0088] In an organizational context, message processing applications **32** may be implemented on a gateway (e.g., one

or more servers or other computing equipment at the edge of the organization's network that serves to control data flowing into and out of the organization). A firewall **34** and other gateway services **40** such as web content filtering, etc. may also be used to control the flow of information into and out of the organization.

[**0089**] In the example of **FIG. 3**, organizations **36** have their own internal networks **38**. Networks **38** may be local area networks (e.g., for smaller organizations) or wide area networks (e.g., for larger or more geographically distributed organizations). Each network **38** typically contains one or more mail servers such as mail servers **42**. Incoming email messages may be delivered to users in an organization by placing the email messages on the mail server **42**. Each user's client software can then retrieve that user's email from the mail server **42**, thereby completing the mail delivery process. Communications network **14** (e.g., the Internet) also contains mail servers (e.g., mail servers associated with various users' and organizations' Internet service providers). These mail servers are used to convey email between users in system **10** over network **14**.

[**0090**] Organizations **36** may use message processing applications **32** to regulate email flowing between their users **12** and communications network **14**. The message processing applications **32** may be used for virus scanning, spam filtering, security policy enforcement, etc.

[**0091**] If desired, an organization may subscribe to a third-party message processing service such as message processing service **44**. When an organization subscribes to this type of third-party service, email messages that are addressed to the organization are diverted to the message processing service **44**. After message processing, the messages are forwarded to the organization for delivery to their original intended recipients. Message diversion may be accomplished by changing database information in the DNS servers in network **14** to redirect email that is addressed to the organization's users to the message processing service **44**. The message processing service **44** may maintain a database of subscriber email address information. Following message processing, email may be forwarded to the proper recipients using information from this database.

[**0092**] During message processing by message processing service **44**, the message processing service **44** (which may use a firewall **34**) may run message processing applications **32** on a server or other computing equipment. This equipment is generally remote from the subscribing organization's location. The message processing applications **32** of the message processing service **44** can be used to perform the same types of message processing that is performed using locally-implemented message processing applications **32** in an organization (e.g., virus scanning, spam filtering, email policy enforcement for security policies and other policies, etc.). An organization may use an application service provider such as the third-party message processing service **44** to relieve the organization from some or all of the responsibilities for processing email messages.

[**0093**] Regardless of whether the message processing applications **32** are used at an individual user's equipment **12**, an organization **36**, or message processing service **44**, the message processing applications **32** may be used to regulate both the transmission and reception of email. Message processing applications **32** may be used at the sender, the recipient, or both the sender and recipient.

[**0094**] As an example, if a sender such as user B at organization A desires to send an email message to a recipient such as user D at organization B, the message may be processed by both the message processing applications **32** of the sender's organization's gateway services **40** and the message processing applications **32** of the recipient's organization's gateway services **40**. The outgoing email from organization A may (as an example) be screened to determine whether it contains sensitive content. If the email contains sensitive content, the message processing applications **32** may use an IBE encryption engine such as IBE encryption engine **18 (FIG. 1)** to encrypt the outgoing email. At organization B, the gateway services **40** of organization B may receive the IBE-encrypted email for user D. The message processing applications **32** may use an IBE decryption engine such as decryption engine **20 (FIG. 1)** to decrypt the IBE-encrypted email from user B. Following decryption, the message processing applications **32** at organization B may perform virus scanning and spam filtering on the email. The email may then be securely transmitted to user D.

[**0095**] Organizations may have IBE private key generators **46** (like IBE private key generator **16** of **FIG. 1**) for generating IBE private keys for associated users. For example, organization A may have an IBE private key generator **46** that is used to generate IBE private keys for all of the users in organization A. Some organizations may have multiple IBE private key generators. For example, organization B may have one IBE private key generator **46** that is used to generate IBE private keys for users in its sales force and another IBE private key generator **46** that is used to generate IBE private keys for its managers. An IBE private key generator **46** and the users associated with that IBE private key generator (i.e., users who obtain IBE private keys from that IBE private key generator) form a "district." Districts need not be mutually exclusive. For example, some of the members of the sales force in organization B may be managers and may therefore belong to two districts in organization B. If desired, information on the district to which a message is encrypted may be transmitted with the message. This may facilitate the decryption process at the recipient's organization.

[**0096**] Illustrative message processing applications (processes) that may be used in system **10** are shown in more detail in **FIG. 4**. In the example of **FIG. 4**, message processing applications **32** are shown as being installed on a gateway **48** at an organization **36**. This is merely illustrative. The same types of message processing applications **32** can be used by message processing service **44** and users such as user A of **FIG. 3** that are not part of an organization.

[**0097**] As shown in **FIG. 4**, the gateway **48** may be connected to communications network **14 (FIGS. 1 and 3)** via firewall **34**. Firewall **34** may be used to implement access rules (typically based on port and address information). Firewall **34** can help to prevent unauthorized access to resources in network **38**. For example, firewall **34** can ensure that only email traffic reaches mail server **42**, etc. Firewall **34** may also be used to control outbound activities.

[**0098**] If incoming communications satisfy the firewall access rules, these communications may be passed to gateway **48**. Gateway **48** may be implemented using one or more servers or other suitable computing equipment. By loading and running message processing applications **32** on gateway

48, gateway **48** can be configured to perform the steps necessary to implement desired message processing functions.

[**0099**] Message processing applications **32** may include IBE encryption engine **18** and IBE decryption engine **20** and other suitable encryption and decryption services (e.g., for PKE encryption and decryption). IBE encryption engine **18** may be used, for example, when encrypting a sensitive outgoing email message to conform with an organizational security policy. IBE encryption engine **18** may also be used to encrypt incoming email messages before those messages are delivered to recipients within the organization **36**. If other secure communications arrangements are available within the organization (e.g., if an SSL or TLS link can be established between gateway **48** and a recipient user **12** or if other message encryption or link security measures are in place within the organization), such additional arrangements may be used in addition to or in place of using IBE to secure internal communications.

[**0100**] Message editor **50** may be used to edit messages. As an example, message editor may be used to delete portions of the text of an email message. If an outgoing message contains potentially sensitive information, the sensitive information may be blocked or replaced by less sensitive information. For example, a sensitive term may be automatically replaced by a code name. As another example, potentially objectionable content in an incoming or outgoing message may be replaced by text stating "content blocked." If a virus is detected in an email attachment or if email attachments are not permitted by the organization (in either incoming or outgoing messages), message editor **50** may be used to remove the attachment.

[**0101**] Message editor **50** may be used to edit any suitable message attribute, such as message header information, message body information, or message attachment information.

[**0102**] As an example, message editor **50** may be used to change the destination of a message. If an outgoing message appears to violate a particular organizational policy, the message editor **50** may, as an example, reroute the message to an administrator by editing the destination address. Message editor **50** may also be used to edit the cc or bcc entry in an email header if it is desired to send a copy of the message to an administrator or other suitable personnel at the organization or other entity. The subject line of an email may be altered or blocked. For example, message editor **50** may add text to the subject line that indicates that the message has been screened for viruses.

[**0103**] Message body information such as text and graphics in the main portion of an email message may be edited by message editor **50** when, for example, sensitive content or potentially objectionable material is detected. As an example, the sensitive or objectionable content may be removed or replaced with a notice such as "content removed."

[**0104**] Message attachments may be removed or altered using message editor **50**. For example, all executable files or all detected viruses may be stripped from incoming or outgoing messages.

[**0105**] Notification generator **52** may be used to alert an administrator or other suitable party. For example, if an outgoing email violates an organizational policy (e.g., because it contains a sensitive internal document as an attachment), a notification message may be sent to an appropriate party that identifies the policy violation and the name of the sender.

[**0106**] Database controller **54** may be used to save copies of messages or portions of messages (e.g., attachments, text or graphics in the message body, or headers) and to perform other message management functions requiring data storage in a database **56**. As an example, database controller **54** may be used to retain a copy of an encrypted incoming message, so that this encrypted version of the message can later be forwarded to the intended recipient within an organization. As another example, database controller **54** may be used to manage the archiving of all messages containing a particular type of content or all messages sent to a particular domain, etc. Database controller **54** may be used to retain copies of certain types of messages for a particular period of time to ensure regulatory compliance.

[**0107**] These are merely illustrative types of processes that may be used to process messages in system **10**. Other processes (applications) **58** may be used to process messages if desired. Moreover, the message processing applications **32** of **FIG. 4** may be used in any suitable combination. For example, a virus scanning program that handles incoming messages may include message processing components such as IBE decryption engine **20**, message editor **50**, notification generator **52**, and database controller **54**. The IBE decryption engine **20** may be used to decrypt IBE-encrypted email before virus detection operations. The message editor **50** may be used to remove attachments containing viruses. The notification generator **52** may be used to generate an alarm for an administrator when a virus is detected. The database controller **54** may be used to save a copy of the offending message following virus detection.

[**0108**] As another example, a regulatory compliance application may be used to examine outgoing messages. When an outgoing message is detected that contains a certain type of data (e.g., patient data or other medial data in the health-care field) or when it is determined that an outgoing message has originated with a particular sender (e.g., a physician) or is destined to a particular recipient (e.g., a patient), the regulatory compliance application may encrypt and archive the message. The regulatory compliance application may include components such as IBE encryption engine **18** to encrypt the message, notification generator **52** to remind the sender of the relevant organizational policy, and database controller **54** to handle the archiving of the message.

[**0109**] Another example concerns unsolicited commercial email (spam). Mail processing applications **32** may include an antispam program. The antispam program may decrypt encrypted messages and block those messages that appear to be spam. The antispam application may include an IBE decryption engine **20** for decrypting incoming messages that have been encrypted using IBE. The antispam application may also include a message editor **50** that edits the destination address to block the email or to divert the offending messages into a suitable repository.

[**0110**] As demonstrated by these examples, mail processing applications **32** include a number of different processes or components which may be used in one or more combi-

nations that need not be mutually exclusive. Moreover, some of these processes may also be implemented on user equipment **12** in addition to gateway equipment **48** (or the equipment of message processing service **44**). As an example, a messaging application such as an email program or other user client **60** may include an IBE encryption engine **18** and IBE decryption engine **20**. The client **60** may use IBE encryption engine **18** to encrypt messages to be sent securely to gateway **48** (as an example). IBE decryption engine **20** may be used to decrypt IBE-encrypted messages.

[**0111**] Network **38** may include one or more mail servers such as mail server **42**. The client software **60** on each user's equipment may automatically send transmitted email messages to mail server **42**. Gateway **48** may process outgoing messages destined to be sent to users over communications network **14** by periodically obtaining these messages from mail server **42**. Incoming messages that have been processed by message processing applications **32** may be directed to mail server **42**. The user client **60** of each user may be configured to automatically retrieve that user's mail from an appropriate mail server **42**. These types of arrangements may be used to support communications between users **12** and gateway **48**, without requiring that each user's equipment be powered up continuously and without requiring gateway **48** to implement the functions of a mail server (although such an arrangement may be used if desired.).

[**0112**] An illustrative unencrypted email message **62** is shown in **FIG. 5**. As shown in **FIG. 5**, an email message **62** may contain header information **64** such as recipient and sender address information and copy recipient address information. The header **64** may also contain a subject line. Message body **66** may contain text and/or graphics. Attachments **68** may be image files, text files, music files, video files, computer code, or any other suitable data or combinations of these items.

[**0113**] After a message of the type shown in **FIG. 5** has been encrypted using an IBE encryption engine, the message may contain information of the type shown in **FIG. 6**. As shown in example of **FIG. 6**, the message body **66** and message attachments **68** of message **62** may be encrypted using a message key SK such as a symmetric message key. The message key SK may be generated by the sender of the message (e.g., randomly) and need not be known ahead of time by the recipient or recipients of the message. To provide the recipient or recipients with the message key in a secure fashion, the message key may be encrypted using IBE. A copy of the IBE-encrypted message key may be included in message **62** for each recipient of the message. The resulting list **70** of one or more IBE encrypted message keys **70** is shown in **FIG. 6**. As shown by the subscripts "RECIPIENT1, RECIPIENT2, . . . " the message keys are IBE-encrypted using the identities Q of the recipients.

[**0114**] The list **70** of IBE-encrypted message keys may also include recipient and district information (i.e., the information "RECIPIENT1 and DISTRICT1 for the first illustrative entry in list **70** of **FIG. 6**). The recipient and district information may be used to help a recipient or recipient's agent in locating and contacting the correct IBE private key generator **46** when requesting a copy of the recipient's IBE private key to decrypt the IBE-encrypted message key for that recipient. The recipient and district information may be provided using any suitable format. For example, recipient information may be provided in the form of the IBE public key that is used to encrypt messages to the recipients, etc. District information may be provided in the form of a domain name or other service name that identifies the service (server) on which the IBE private key generator is located. Once the proper IBE private key has been obtained, the IBE-encrypted message key SK can be decrypted and used to decrypt the message attachments and body of the message.

[**0115**] Illustrative steps involved in using system **10** to send a message **62** though a gateway at a sender's organization **36** or user equipment **12** are shown in **FIG. 7**. At step **72**, a sender may create a message to be sent. The message may be encrypted by the sender using an IBE encryption engine **18** using public parameter information and the value of Q for the recipient. If Q is based on the recipient's email address concatenated with a validity period, for example, Q can be constructed in real time by the sender's client before it is used to encrypt the message.

[**0116**] Because many organizations require that outgoing messages be subject to inspection by the message processing applications **32** at the organization's gateway **48**, senders in some organization may not be permitted to encrypt messages at the desktop using IBE. Rather, senders may send IBE-encrypted messages to outside recipients by informing the message processing applications **32** of the organization that a given message is to be encrypted using IBE. Any suitable technique may be used to inform the message processing applications of which messages are to be encrypted. For example, the sender's client application may automatically set a flag or other suitable indicator associated with the message. Information indicating that the sender desires to have the message processing applications **32** encrypt the message using IBE may be included in the header of the message, in the message body, or in the message attachments. Information indicating that the sender desires to have the message processing applications **32** encrypt the message using IBE may also be provided to the message processing applications **32** separately (e.g., using a separate communications path or separate message or notification, etc.).

[**0117**] The message may be transferred to the gateway **48** at step **74** (e.g., using one or more mail servers **42**).

[**0118**] At step **76**, the message processing applications **32** may be used to process the outgoing message. For example, the message processing applications **32** may perform virus scanning to detect viruses in the message attachments or other portions of the message. The message processing applications **32** may also examine the content of the message to determine if the message contains potentially objectionable content or has other content or attributes that require encryption or that require other special actions to be taken (e.g., archiving, message rerouting, editing, etc.). The message processing applications can examine any suitable portions of the message and may use external information (e.g., information on the current date and time, information on the recorded sending habits of the sender, information about certain recipients, etc.) in determining what actions should be taken with respect to the message. Illustrative actions (processing functions) that may be taken include editing the message, blocking the message, filtering out portions of the

message, creating alarms or other notifications, archiving the message, and sending copies of the message to certain recipients.

[0119] One of the actions that may be taken by the message processing applications **32** during message processing is to encrypt the message. In particular, the message processing applications **32** may IBE-encrypt the message using IBE encryption engine **18**. The message may be encrypted whenever a message processing application detects that a flag has been set by the sender that requests IBE encryption be performed on the message or whenever the message processing application receive other suitable information from the sender indicating that the sender desires that the message be encrypted using IBE. The message processing applications **32** may also automatically encrypt certain messages using IBE based on attributes of the message such as message body contents, message attachment status or contents, message recipient address information, message sender address information, etc.

[0120] Whether indicated by a message processing application policy or by information provided explicitly by the sender's client, at step **78**, the message processing applications on the gateway can use IBE encryption engine **18** to encrypt the message for the recipient. To encrypt the message, the message processing applications **32** may obtain the IBE public key of the recipient (Q) and public parameter information (e.g., P and sP). The public parameter information may be obtained from the Internet (e.g., from a public parameter host server). The value of the recipient's IBE public key Q may be generated in real time using known IBE public key generation rules (e.g., by concatenating validity period information with the email address of the recipient).

[0121] If desired, an encrypted message from the sender's equipment (e.g., a message encrypted using IBE) can be passed through the message processing applications **32** without decryption and examination of the encrypted contents. In this situation, the message processing applications **32** can forgo policy enforcement to determine whether the message should be encrypted, because the message is already encrypted.

[0122] The message processing applications **32** can also process unencrypted portions of the message (e.g., message header information such as address information and subject line information) even if the message has been IBE-encrypted at the sender and has not been decrypted at the gateway prior to processing by the message processing applications. The message processing applications **32** can also decrypt the encrypted message for processing and then forward a retained encrypted version or re-encrypted version of the message to the recipient. When IBE encryption is used with this type of approach, the message processing applications **32** must have access to the IBE private key corresponding to the IBE public key that was used by the sender's client to encrypt the message. Access to the necessary IBE private key can be obtained when the IBE public key that was used to encrypt the message belongs to or is associated with the gateway itself, rather than the intended downstream recipient. The IBE re-encryption process performed by the message processing applications **32** following message processing may use the IBE public key of the recipient. During the re-encryption process, the message processing application can generate the IBE public key of the recipient in real time (e.g., by concatenating a validity period with recipient email address information, etc.).

[0123] To ensure the integrity of the message, it may be desirable to provide the message from the sender to the message processing applications **32** over the organization's network **38** in a secure fashion. One illustrative way to convey the message from the sender to the message processing applications **32** securely is by allowing the sender to use IBE to encrypt the message using the IBE public key of the message processing applications **32** (gateway **48**). The message can also be encrypted using PKE. Encryption of the message can be avoided if the communications path between the sender and the messaging application is trusted (e.g., because a protocol such as SSL or TLS is used to ensure the security of the link, because the link is physically secure, etc.).

[0124] If the sender is not at an organization (i.e., the sender is a user such as user A of **FIG. 3**), the sender's message processing applications can scan for viruses or perform other suitable actions before using IBE encryption engine **18** to encrypt the outgoing message. Because no gateway is needed in this situation, the sender's message processing applications and client software can perform the necessary message processing steps and IBE encryption for the recipient without encrypting or securing communications between the sender's equipment and a gateway.

[0125] At step **80**, following processing by the message processing applications **32**, the message (e.g., a message that has been encrypted using IBE or an unencrypted message) may be sent through the optional firewall **34** of the sender's organization to the recipient over network **14**.

[0126] Illustrative steps involved in receiving incoming email messages through the message processing applications **32** at an organization or a user's equipment are shown in **FIG. 8**. At step **82**, a message is sent by a sender. The sender may be a user such as user A of **FIG. 3** that is not associated with an organization or may be a user such as user B of **FIG. 3** who is part of an organization. The message may be encrypted using IBE or may be unencrypted. IBE-encrypted messages may be created by obtaining the IBE public key of the recipient and the IBE public parameter information for the recipient's district and by using this information with IBE encryption engine **18** to encrypt the message.

[0127] At step **84**, the message may be received over network **14** by the recipient's organization (or by the recipient's equipment if the recipient is not associated with an organization). If a firewall is in use, the message may be received through the firewall.

[0128] If the message is encrypted with IBE, a copy of the IBE-encrypted message may, at step **86**, optionally be retained in database **56** (**FIG. 4**) by the message processing applications. By retaining the encrypted version of the message, it is not necessary to re-encrypt the message following message processing.

[0129] The IBE-encrypted message may be decrypted by the message processing applications **32** using the IBE decryption engine **20** at step **88**. To decrypt the message, the gateway requests and obtains the IBE private key for the recipient in real time from the appropriate IBE private key generator **46**.

[0130] At step **90**, the unencrypted version of the message that was received through the firewall at step **84** or the unencrypted version of the message that was produced during the decryption process of step **88** may be processed using the message processing applications **32** at the recipient's gateway. (If the recipient is not associated with an organization, the recipient's message processing applications can obtain the recipient's IBE private key from an appropriate IBE private key generator over network **14** and can then use the IBE private key to decrypt the IBE-encrypted message. Additional desired processing operations such as virus scanning, spam filtering, notifications, archiving, etc. may be performed on the decrypted message and the resulting decrypted and processed version of the message may be provided to the recipient.)

[0131] When the recipient is associated with an organization, the message processing of step **90** may involve virus scanning, spam filtering, security policy enforcement and enforcement of regulatory policies and other policies. The message processing may also involve message editing, the generation of alerts or other notifications, message archiving or redirection to appropriate personnel at the recipient's organization, etc.

[0132] At step **92**, after the message has been processed at the gateway **48**, the message may be provided to the recipient over the local area network **38** or wide area network **38** of the organization. The message may, for example, be provided to the recipient via one or more mail servers **42** that are part of the network **38**. If desired, secure protocols such as SSL and TLS may be used to secure the communications paths used during message distribution to the recipient. The message may also be provided from the gateway to the recipient securely by using a communications path that is trusted because it is physically secure or by encrypted the message to the recipient at the gateway (e.g., using IBE or PKE techniques). If IBE encryption is used to secure the message for the recipient, the message processing applications **32** can either re-encrypt the message using the IBE encryption engine **18** of the message processing applications or can forward the original IBE-encrypted version of the message that was retained at step **86**.

[0133] At step **94**, the recipient may receive the message from the gateway. For example, an email application or other client software on the recipient's equipment may be configured to periodically query the mail server **42** to retrieve the recipient's email. If the message obtained from the gateway via the mail server is IBE-encrypted, the recipient's client software may use its associated IBE decryption engine **20** to decrypt the message and present its contents to the recipient.

[0134] If desired, a notification-based delivery process may be used during step **94** to provide the email message from the gateway to the recipient. With this type of approach, the recipient may be notified (e.g., in an email message or other notification) when a message is available for viewing (e.g., after the message processing applications **32** have finished message processing). The gateway may store the message on a server (e.g., at the gateway or other suitable location on the network **38**). The notification message for the recipient may include a web link or other suitable clickable option that the recipient can respond to. When the recipient clicks on the link or option button, the recipient's web browser or other client software is launched and taken to an appropriate download page/screen. The recipient can then interact with displayed information to view the message (e.g., in a web browser window) or to otherwise complete the viewing/delivery transaction.

[0135] Illustrative steps involved in the IBE decryption process of step **88** of **FIG. 8** are shown in **FIG. 9**. After a message has been received by the gateway **48** through the firewall (step **96** or step **84** of **FIG. 8**), the gateway may, at step **98**, use information on the identity of the intended recipient of the message to request a copy of the IBE private key from the appropriate IBE private key generator **46**. Recipient identity information may be obtained, for example, from the header of the email message or IBE public key information Q provided with the message in a list such as list **70** of **FIG. 6**. Information on the district to which the recipient belongs may also be obtained from the email message (e.g., from a list such as list **70** of **FIG. 6**). The message processing applications **32** can use the district information to contact the correct IBE private key generator. The message processing applications and gateway can present the recipient's credentials or other suitable information to the IBE private key generator **46** when requesting the IBE private key for the recipient.

[0136] Any suitable technique may be used to allow the message processing applications to obtain the recipient's private key. For example, if username and password authentication techniques are used by the IBE private key generator to authenticate users, the username and password information for each of the recipients at the organization may be maintained by the message processing applications **32** at the gateway for use when requesting IBE private keys. As another example, credential information may be obtained by the gateway from the recipient in real time. If desired, a ticket or other electronic token or information may be used by the gateway to prove that the message processing applications are authorized to obtain the recipient's IBE private key.

[0137] The gateway **48** may use its own credentials (i.e., gateway credentials) when requesting private keys from the IBE private key generator **46**. In this type of arrangement, the gateway and processing applications work as a proxy for the recipient. As an example, the gateway may authenticate to the private key generator using an identity such as secure_gateway@company.com when requesting keys. In this scenario, the private key generator knows that this "user" is allowed to request any key (or at least a wide range of keys) and provides the requested key accordingly.

[0138] Regardless of which arrangement is used by the message processing applications **32** to prove to the IBE private key generator **46** that the message processing applications **32** are authorized to obtain the IBE private key for the message recipient, at step **100**, this arrangement is used by the IBE private key generator **46** to authenticate the message processing applications **32** and gateway **48**.

[0139] Once the message processing applications **32** have been authenticated by the IBE private key generator **46**, the IBE private key generator **46** generates the IBE private key for the recipient in real time at step **102** using the master secret s (e.g., by computing sQ).

[0140] The IBE private key that is generated at step **102** may be provided to the message processing applications **32**

at the gateway at step **104**. For example, this information may be provided over network **38** using a secure link such as a SSL or TLS link, over a link that is trusted because it is physically secure, or in a secure message.

[**0141**] At step **106**, the IBE private key may be used by the decryption engine **20** in the message processing applications **32** on the gateway **46** to decrypt the message.

[**0142**] The diagram of **FIG. 10** shows how message processing applications **32** may process unprocessed messages **108** to produce processed messages and to produce notifications and take other suitable actions **110**. Any suitable information may be used by the message processing applications **32** in processing the messages. For example, external data **112** may be used by the message processing applications **32**. Such external data may, for example, include information on the current time and date, information on the location of the message processing applications, information of the organization or other entity who is using the applications, etc. The message processing applications **32** may also examine message attributes when determining how to process a given message. For example, the message processing applications may examine message content **114** such as attachment information **116** and message body information **118**. Message attribute information may also include message header information **120** such as information on addresses and subject information. If a message is encrypted, the header or message content may include a list such as list **70** of **FIG. 6** that contains encrypted message keys for each recipient and associated recipient (public key) and district information. Such recipient and district information and encrypted message keys may also be used as inputs by the message processing applications **32**.

[**0143**] In processing the unprocessed messages **108**, the message processing applications **32** may implement policy rules **122**. Policy rules **122** may include default rules (e.g., rules that are built into the IBE cryptographic algorithm being used) and rules that are adjustable or selectable (e.g., by a system administrator). As an example, a system administrator may direct the message processing applications **32** to reject all incoming email from a particular sending address. As another example, the system administrator may instruct the message processing application **32** to require that all message sent to a particular destination address or containing particular types of content in the attachments **116** or body **118** be encrypted using IBE. Policies **122** may include policies on how to detect and treat viruses, policies related to blocking spam, security or encryption enforcement policies, policies related to content filtering, etc. These policy rules **122** determine what types of processed messages are produced during message processing, what types of notifications are produced, when and how the message is to be edited or archived, which messages are to be encrypted, and how other actions are to be taken.

[**0144**] If desired, the message processing applications **32** may be provided in the form of software packages such as a firewall application, encryption and decryption processes, and virus scanning and content filtering (spam-blocking) processes. An illustrative arrangement of this type is shown in **FIG. 11**. As shown in **FIG. 11**, an incoming message may first be handled by firewall process **124**. Firewall process **124** may, for example, block incoming messages unless the IP packets that make up those messages contain appropriate address and port information.

[**0145**] IBE decryption process **126** may receive incoming messages from firewall process **124**. The IBE decryption process **126** may obtain recipient information from the message. This information may be the IBE public key of the recipient Q or may be used to construct the IBE public key of the recipient Q. Using this information and other information such as district information that is obtained from the message and using recipient credential information such as a username and password, a ticket, etc., the IBE decryption process **126** can authenticate to the IBE private key generator **128** during a key request process.

[**0146**] In response to a valid request for the recipient's IBE private key, IBE private key generator **128** generates the IBE private key of the recipient and provides it to IBE decryption process **126**. IBE decryption process **126** uses the IBE private key to decrypt the IBE encrypted message. The unencrypted version of the message is then passed to virus scanning process **130**. If the message from firewall process **124** was initially unencrypted, the IBE decryption process **126** can pass the unencrypted message to virus scanning process **130** directly.

[**0147**] The virus scanning process **130** can scan the unencrypted version of the message for viruses. After processing by virus scanning process **130**, a spam blocking application or other content filter process **132** may be used to determine whether or not to block or edit the message based on its contents or other attributes.

[**0148**] After processing by content filter process **132**, the message may be delivered to the recipient by delivery process **134**.

[**0149**] Outgoing messages can be created using an email editor or other suitable message creation process **136**. The messages may be left in unencrypted form so that processes such as processes **138** and **140** can operate on the unencrypted contents of the messages.

[**0150**] Content filter process **138** may be used to examine the content of the message and to block or redirect messages based on their content.

[**0151**] Virus scanning process **140** may be used to scan outgoing messages for viruses. After scanning, the outgoing message may be provided to IBE encryption process **142**. If desired, all messages leaving an organization (or other user site) may be encrypted using IBE encryption. Alternatively, messages may be selectively encrypted. For example, messages may be encrypted by IBE encryption process **142** whenever a message is determined to contain sensitive content or to be destined to a particular address, etc. Messages may also be encrypted whenever encryption is requested by the sender (e.g., when the creation process **136** sets an indicator or otherwise instructs the IBE encryption process to encrypt the message before transmission out of the organization).

[**0152**] During IBE encryption, the IBE encryption process obtains the IBE public parameters for the intended message recipient. The IBE encryption process **142** may, for example, formulate an IBE public parameter request using known rules. The IBE public parameter request may be provided to a suitable IBE public parameter host **144** which responds by providing the IBE public parameters to the IBE encryption process **142**.

[0153] After IBE encryption by process **142** (if desired), the outgoing message may be sent over an external network **14** through firewall process **124**.

[0154] If the message processing applications that are used for implementing message management services are used by an organization, the system components of **FIG. 11** other than IBE public parameter hosts for recipients outside of the organization are generally located within the organization's network **38**. If the message processing applications are used by an individual sender or recipient who is connected to the Internet through a mail server operated by their Internet Service provider, the IBE private key generator **128** and IBE public parameter host **144** may be located remotely and the remaining components of **FIG. 11** may be implemented locally on the individual's equipment.

[0155] In system environments in which the services of a third party message management service are used, message processing applications **32** can be run on servers or other suitable equipment at the message management service. For example, the message management service may use a firewall process **124**, IBE decryption process **126**, virus scanning process **130**, and content filtering process **132** of the type shown in **FIG. 11**. IBE private key generator **128** may be located remotely or at the message management service. IBE public parameter hosts such as host **144** are generally at remote locations and are not located at the message management service. A delivery process may be used by the message management service when forwarding processed emails to the organization who subscribes to the services of the message management service. Although outgoing mail need not be handled by the message management service, if desired, such outgoing message processing may be handled using processes **138**, **140**, and **142** after a message has been created at the organization subscribing to the third-party message management service using creation process **136**.

[0156] Illustrative steps involved in using an arrangement of the type shown in **FIG. 11** to handle incoming messages that have been encrypted using IBE are shown in **FIG. 12**. At step **146**, an IBE-encrypted email message may be received by IBE decryption process **126** though firewall process **124**.

[0157] At step **148**, the IBE decryption process **126** may use information on the recipient's identity and/or the recipient's IBE public key Q to request a corresponding IBE private key from the IBE private key generator **128**. If there are multiple IBE private key generators available, the IBE decryption process may use information on the recipient's district to locate and query the appropriate IBE private key generator. During the key request process, the IBE decryption process uses recipient credential information to prove to the IBE private key generator **128** that the IBE decryption process is authorized to obtain the IBE private key for the recipient. The recipient credential information may be provided in any suitable format, such as username and password information, biometric information, information derived from a hardware token in the control of the recipient, a ticket or other suitable token or information that serves as recipient credential information, etc.

[0158] After the IBE decryption process **126** has successfully completed the authentication process, the IBE private key generator **128** generates the IBE private key for the intended recipient of the message at step **150** in real time.

[0159] At step **152**, the IBE decryption process **126** obtains the IBE private key from the IBE private key generator **128**.

[0160] At step **154**, the IBE decryption process decrypts the encrypted message using the IBE private key.

[0161] At step **156** virus scanning process **130** may be used to scan the unencrypted version of the message for viruses. Any suitable virus scanning process (software package) may be used to examine the message for possible viruses at step **156**. The virus scanning process **130** may operate on any suitable aspect of the message such as the body of the message, the message attachments, or message header information and may apply any suitable virus detection criteria. As an example, the virus scanning process **130** may compare executable code associated with the message to known virus signatures. If a match is detected, the virus scanning process can block the message and generate an alert. The output of the virus scanning process **130** is a scanned version of the unencrypted message.

[0162] At step **158**, antispam filtering and other suitable content-based filtering may be applied to the scanned and unencrypted version of the message using content filtering process **132**. Content filtering process **132** may, as an example, examine the source address of the message or attempt to detect other message attributes that are associated with unsolicited commercial email.

[0163] Although virus scanning is performed before content filtering of incoming messages in the example of **FIG. 11**, the order of virus scanning, content filtering, and other message processing steps is generally not critical. Spam filtering or other content filtering processes may be performed before virus scanning of incoming message if desired. An advantage of scanning for viruses at an early stage is that this may help to reduce the risk of damage from a virus.

[0164] If the message does not contain viruses and has not been blocked by the content filtering process **132**, the message may be provided to the recipient by the delivery process **134** at step **160**.

[0165] Senders of messages (or a gateway associated with a sender) will generally use IBE encryption to encrypt messages to recipients. With this approach, the IBE public key of the ultimate downstream recipient (e.g., a particular individual at an organization) is used to encrypt the message. For example, if a recipient has an email address of user@company.us.com, the value of Q that is used to encrypt the message may include the full string user@company.us.com. At the receiving organization, a gateway is used to process the message. The gateway serves as the recipient's agent in requesting the recipient's IBE private key from the IBE private key generator. The gateway then decrypts the message for the recipient so that message processing may be performed on the message before it is distributed to the recipient over the organization's network.

[0166] If desired, senders of messages can use IBE encryption to encrypt messages to the organization (or part of the organization) rather than the individual recipient. For example, if a recipient has an email address of user@us.company.com, the sender can use a value of Q to encrypt the message that is based on the domain name portion of the recipient's email address (i.e., us.company-

.com in this example). As another example, the sender can use a value of Q that includes only the subdomain string "company.com." With this type of approach, the message processing applications **32** at the receiving gateway can obtain the IBE private key needed to decrypt the IBE-encrypted message by using the credentials of the organization (or portion of the organization), rather than using an individual recipient's credentials. Following message processing, the recipient's identity can be used for IBE encryption and delivery over the internal network **38** of the organization or the processed version of the message may be delivered securely to the recipient using other suitable approaches (e.g., a secure link, PKE encryption, a trusted physically secure path, etc.).

[**0167**] The foregoing is merely illustrative of the principles of this invention and various modifications can be made by those skilled in the art without departing from the scope and spirit of the invention.

What is claimed is:

1. A method for using a gateway at an organization to process a message that has been sent to a recipient at the organization from a sender over a communications network, wherein the message has been encrypted at the sender using an identity-based-encryption (IBE) public key of the recipient to produce an IBE-encrypted message, the method comprising:

at the gateway, obtaining an IBE private key for the recipient corresponding to the IBE public key of the recipient;

at the gateway, decrypting the IBE-encrypted message to produce an unencrypted version of the message;

at the gateway, scanning the unencrypted version of the message for viruses to produce a scanned version of the message; and

providing the scanned message from the gateway to the recipient.

2. The method defined in claim 1 further comprising:

processing the unencrypted version of the message at the gateway to determine whether to generate a notification; and

if it is determined that a notification is to be generated, using the gateway to generate the notification.

3. The method defined in claim 1 further comprising:

processing the unencrypted version of the message at the gateway to determine whether to edit the message; and

if it is determined that the message is to be edited, using a message editor at the gateway to edit the message.

4. The method defined in claim 1 further comprising:

processing the unencrypted version of the message at the gateway to determine whether to archive the message; and

if it is determined that the message is to be archived, using a database controller to save a copy of the message in a database of the organization.

5. The method defined in claim 1 further comprising:

processing the unencrypted version of the message at the gateway to determine if the message is spam.

6. The method defined in claim 1 wherein the organization has an IBE private key generator that communicates with the gateway over a network of the organization, the method further comprising:

at the gateway, requesting and obtaining the IBE private key for the recipient over the network of the organization, wherein providing the scanned message from the gateway to the recipient comprises providing the scanned message from the gateway to the recipient over the network of the organization.

7. A method for using a gateway at an organization to process a message that has been sent to a recipient at the organization from a sender over a communications network, wherein the message has been encrypted at the sender using an identity-based-encryption (IBE) public key of the recipient to produce an IBE-encrypted message, the method comprising:

at the gateway, obtaining an IBE private key for the recipient corresponding to the IBE public key of the recipient;

at the gateway, decrypting the IBE-encrypted message to produce an unencrypted version of the message;

at the gateway, scanning the unencrypted version of the message to determine whether the message is spam; and

providing the scanned message from the gateway to the recipient over a network of the organization.

8. The method defined in claim 7 further comprising:

processing the unencrypted version of the message at the gateway to determine whether to generate a notification; and

if it is determined that a notification is to be generated, using the gateway to generate the notification.

9. The method defined in claim 7 further comprising:

processing the unencrypted version of the message at the gateway to determine whether to edit the message; and

if it is determined that the message is to be edited, using a message editor at the gateway to edit the message.

10. The method defined in claim 7 further comprising:

processing the unencrypted version of the message at the gateway to determine whether to archive the message; and

if it is determined that the message is to be archived, using a database controller to save a copy of the message in a database of the organization.

11. The method defined in claim 7 further comprising:

processing the unencrypted version of the message at the gateway to determine if the message contains a virus.

12. The method defined in claim 7 wherein the organization has an IBE private key generator that communicates with the gateway over the network of the organization, the method further comprising:

at the gateway, using recipient credential information to request and obtain the IBE private key for the recipient over the network of the organization.

13. A method of processing incoming email messages to an organization, wherein the organization has a network, a gateway, a private key generator, and a plurality of recipients

and wherein the gateway, private key generator, and recipients are connected by the network, the method comprising:

receiving an encrypted email message for a recipient in the organization with the gateway;

with the gateway, using recipient credential information to request a private key of the recipient from the private key generator;

using the recipient credential information at the private key generator to determine whether the gateway is authorized to obtain the requested private key, and, if the gateway is authorized, generating the requested private key in real time;

providing the private key that has been generated by the private key generator to the gateway; and

at the gateway, using the private key to decrypt the email message.

14. The method defined in claim 13 wherein the gateway has an identity-based-encryption (IBE) decryption engine and wherein using the private key to decrypt the email message comprises using the IBE decryption engine to decrypt the email message at the gateway.

15. The method defined in claim 13 wherein the gateway is connected to the Internet by a firewall, the method further comprising receiving the encrypted email message with the gateway through the firewall.

16. A method of processing outgoing email messages from an organization, wherein the organization has a network, a gateway, a private key generator, and a plurality of users and wherein the gateway, the private key generator, and the users are connected by the network, the method comprising:

at a user, creating an email message to be sent to a recipient over the Internet;

providing information from the user to the gateway that indicates to the gateway that the email message is to be encrypted using an identity-based-encryption (IBE) public key of the recipient;

at the gateway, receiving the information from the user that indicates that the email message is to be encrypted using the IBE public key of the recipient and, in response, using an IBE encryption engine and the IBE public key of the recipient to encrypt the email message; and

sending the IBE-encrypted email message to the recipient over the Internet.

17. The method defined in claim 16 further comprising scanning the email message at the gateway for viruses before using the IBE encryption engine to encrypt the message.

18. A method of processing outgoing email messages from an organization, wherein the organization has a network, a gateway, a private key generator, and a plurality of users and wherein the gateway, the private key generator, and the users are connected by the network, the method comprising:

at a user, creating an email message to be sent to a recipient over the Internet;

at the gateway, processing the email message to determine whether the email message should be encrypted; and

if it is determined that the email message should be encrypted, using an identity-based-encryption (IBE) public key of the recipient and an IBE encryption engine at the gateway to encrypt the email message.

19. The method defined in claim 18 wherein processing the email message at the gateway to determine whether the email message should be encrypted comprises examining content in the email message to determine whether it is sensitive.

20. The method defined in claim 18 wherein processing the email message the gateway to determine whether the email message should be encrypted comprises examining address information in the email message to determine whether to encrypt the email message.

* * * * *